Accessory Design Guidelines for Apple Devices

Release R22

Contents

Overview 19

1. Introduction 20

2. Requirements 21

3. Terminology 22

3.1 Device 22
3.2 Accessory 22
3.3 Component 22
3.4 Control Surface 23
3.5 Direct User Action 23
3.6 Built-In Cable 23
3.7 Accessory Interface Specification 24
3.8 Apple MFi Licensing Program 24

Accessories 25

4. All Accessories 26

4.1 Scratches and Damage 26
4.2 Compliance Testing 26
4.3 Integrated USB Receptacles 26
4.4 User Supplied Cables and AC Power Adapters 27
4.5 TDMA Noise 27
4.6 Attachments 27
4.7 Magnetic Interference 27
4.8 Radio Frequency (RF) Performance 29
4.8.1 Materials and Coatings 29
4.8.2 Antenna Keep-Out 29
4.8.3 Over The Air (OTA) Transmission/Reception 29
4.8.4 Specific Absorption Rate (SAR) 30
4.8.5 Near Field Communication (NFC) 30
4.9 Thermal Management 31

2024-05-13 | Copyright © 2024 Apple Inc. All Rights Reserved.

4.10 Tripod Connections 31

5. Cases 32

5.1 Product Design 32
5.1.1 Device Protection 32
5.1.2 Access to Inputs and Interconnects 33
5.1.3 Dock Compatibility 37
5.1.4 Wireless Power and Rear Pockets 37
5.2 Acoustics 37
5.2.1 Call Quality 38
5.2.2 Speaker to Microphone Coupling 38
5.2.3 Speaker/Microphone Openings 38
5.3 Ambient Light Sensor and Proximity Sensor 41
5.4 Taptic Engine 41
5.5 Magnetic Interference 42
5.6 Touch ID 42
5.7 Camera 42
5.7.1 Geometry 42
5.7.2 Color 43
5.7.3 Surface Finish 43
5.7.4 Image Degradation Examples 43
5.8 Reliability 44
5.8.1 Device Insertion and Removal 44
5.8.2 Colorfastness 45
5.9 Environmental 45
5.10 Test Procedures 45
5.10.1 Device Models 45
5.10.2 Product Design 61
5.10.3 Taptic Engine 63
5.10.4 Touch ID Sensor Overlays 64
5.10.5 Camera 65
5.10.6 Near-Field Communication (NFC) 65
5.10.7 Compass 66
5.10.8 Acoustics 67

6. Covers 70

6.1 Device Protection 70
6.2 Magnetic Interference 70
6.3 Smart Covers 70

2024-05-13 | Copyright © 2024 Apple Inc. All Rights Reserved.

7. Screen Overlays 72
7.1 Product Design 72
7.1.1 Optical Transmission 72
7.1.2 Infrared Transmission 73
7.1.3 Transmission Haze 73
7.1.4 Dynamic Island 73
7.2 Edge Swipe Gestures 74

8. Camera Attachments 75
8.1 Magnetic Interference 75

9. Adapters 76
9.1 Headset Adapters (Lightning to 3.5 mm) 76
9.2 USB-A/USB-C to Lightning Headset Adapters 76
9.3 Lightning to USB Micro-B Adapters 76

10. AC Power Adapters 78
10.1 Converter Switching Frequencies 78
10.2 YCAP AC Capacitor 78
10.3 Impedance Stability 78
10.4 Fuse Protection 79
10.5 Short Circuit Response 80

11. Battery Packs 81

12. Headsets 82
12.1 Product Design 82
12.2 Audio Interface 82
12.3 Remote Controls 82
12.4 USB-C Headset Identification 83

13. Strobes 84

14. Keyboards 86
14.1 Requirements 86
14.2 Examples 91
14.2.1 Example HID Report Descriptor 91

15. Trackpads 92
15.1 Requirements 92

2024-05-13 | Copyright © 2024 Apple Inc. All Rights Reserved.

15.1.1 Integration with Keyboards 92
15.1.2 HID Report Descriptor 92
15.1.3 Coexistence 93
15.1.4 Performance 93
15.1.5 Input Confidence 94
15.1.6 Click to Wake 94
15.2 Examples 95
15.2.1 Example HID Report Descriptor 95
15.2.2 Example Trackpad 98

16. External Storage 101
16.1 Requirements 101
16.2 ProRes 4K up to 60 fps 101

17. AirPods Accessories 102
17.1 Charging Case Covers 102
17.2 Chargers 102
17.3 Test Procedures 103
17.3.1 Power 103

18. Apple Vision Pro Accessories 105
18.1 Apple Vision Pro Storage Cases 105
18.2 Apple Vision Pro Battery Holders 105
18.3 Apple Vision Pro Bands 106
18.4 Test Procedures 106
18.4.1 Equipment 106
18.4.2 Peel Force Test 106

19. Watch Bands 108
19.1 Requirements 108
19.2 Apple Watch Band Interface 110
19.3 Example Apple Watch Lug Assembly 111
19.4 Example Apple Watch Lug 113

20. StandBy Mounts 114
20.1 Product Design 115
20.2 Test Procedures 116
20.2.1 Equipment 116
20.2.2 Enable StandBy 116
20.2.3 Product Design 116

2024-05-13 | Copyright © 2024 Apple Inc. All Rights Reserved.

21. Continuity Camera Mounts 117
21.1 Product Design 118
21.2 Apple TV Mount 119
21.3 MacBook Mount 120
21.4 iMac or Display Mount 121
21.5 Test Procedures 122
21.5.1 Equipment 122
21.5.2 Test Setup 122
21.5.3 Product Design 123
21.5.4 Center Stage 123
21.5.5 Desk View 124

Features 126

22. Accessory Power (USB-C) 127
22.1 Available Current 127
22.2 Fast Role Swap (FRS) 128
22.3 Test Procedures 128
22.3.1 Maximum Accessory Power 128

23. Accessory Power (Lightning) 131

24. App Discovery 132

25. App Launch 133

26. App Match 134

27. Bluetooth Accessory Identification 135
27.1 HFP Command AT+XAPL 135

28. Bluetooth Headset Battery Level Indication 137
28.1 HFP Command AT+IPHONEACCEV 137

29. Device Power (USB-C) 138
29.1 External Power Source 138
29.2 Power State Changes 139

30. Device Power (Lightning) 140

2024-05-13 | Copyright © 2024 Apple Inc. All Rights Reserved.

30.1 Direct Power Source 140
30.2 External Power Source 140
30.3 Declaring Capability 141
30.4 Providing Power using USB Connectors 141
30.5 Labeling Multiple Connectors 141
30.6 Fast Charge for iPhone (20 W) 142
30.7 Overcurrent and Short Circuit Protection 143
30.8 Overcurrent and Short Circuit Protection Resets 144
30.9 Power State Changes 144

31. Device Power (Inductive) 145
31.1 Qi Wireless Power 145
31.2 MagSafe 146
31.3 Electromagnetic Compatibility (EMC) 146

32. Ethernet over USB 149

33. External Accessory Protocol 150

34. HID Headset Remote 151
34.1 Requirements 151
34.2 Examples 152
34.2.1 Headset Remote Example HID Report Descriptor (Telephony) 152
34.2.2 Headset Remote Example HID Report Descriptor (Media Playback) 152
34.2.3 Headset Remote Example HID Report Descriptor (Telephony and Media Playback) 153

35. Location Information 155

36. MagSafe Attach 156
36.1 MagSafe Case Magnet Array 157
36.1.1 Product Design 157
36.1.2 Mechanical 157
36.1.3 Magnetic Interference 163
36.2 MagSafe Accessory Magnet Array 164
36.2.1 Product Design 164
36.2.2 Mechanical 164
36.3 MagSafe Accessory Enclosure Geometry 171
36.4 Test Procedures 172
36.4.1 MagSafe Case Magnet Array 172

2024-05-13 | Copyright © 2024 Apple Inc. All Rights Reserved.

36.4.2 MagSafe Accessory Magnet Array 175

37. Media Library Access 177

38. Musical Instrument Digital Interface (MIDI) 178

38.1 Requirements 178
38.2 Test Procedures 178

39. Now Playing Updates 179

40. Out-of-Band Bluetooth Pairing 180

41. Siri 181

41.1 Enabling Custom Siri Commands 181
41.2 Obtaining Siri Availability Information 181
41.2.1 Obtaining Status Information at Connection 181
41.2.2 Receiving Siri Availability Updates from the Device 182
41.3 Initiating a Siri Session 183
41.3.1 Initiating a Session from the Accessory 183
41.3.2 Initiating a Session from the Device 184
41.3.3 Ending a Session from the Accessory 185
41.4 Siri Eyes Free Mode 185
41.4.1 HFP Command AT+APLEFM 186
41.5 Improving Voice Recognition 186
41.5.1 Wide Band Speech Support 187
41.6 Optimizing the Siri Experience 187
41.7 Common Siri Applications 188
41.7.1 Initialization Procedure After Connection is Established 188
41.7.2 Phone Dialing Using Siri 189
41.7.3 Audio Routing and Media Playback Using Siri 189
41.7.4 Turn-By-Turn Directions Using Siri 190
41.8 User Interaction with Siri Eyes Free in a Vehicle 190
41.9 Enabling/Disabling Siri from the Device 192
41.10 Test Procedures 193
41.10.1 Siri Eyes Free 193

42. Wi-Fi Information Sharing 198

Protocols 199

2024-05-13 | Copyright © 2024 Apple Inc. All Rights Reserved.

43. USB Power Capability Vendor Request 200

44. USB D+/D- Resistor Networks 201
44.1 Declaring Power Source Capability 201
44.2 Identifying Power Source Current Limit 202

45. USB Power Delivery (PD) 204

46. USB Type-C Current 205

47. Advanced Audio Distribution Profile (A2DP) 206
47.1 Bluetooth A2DP Specification 206
47.1.1 AVDTP Transactions 206
47.2 SubBand Codec (SBC) 206
47.3 MPEG 2/4 AAC Codecs 207
47.4 Test Procedures 208
47.4.1 Audio Quality 208
47.4.2 Audio Switching 208
47.4.3 HFP Interaction 208
47.4.4 Siri 209
47.4.5 Video Playback 209

48. iAP2 210

49. Human Interface Device (HID) 211
49.1 Requirements 211
49.1.1 Report Descriptor 212
49.1.2 USB 212
49.2 Test Procedures 212
49.2.1 General 212

Transports 214

50. Bluetooth 215
50.1 Enhanced Data Rate 215
50.2 Adaptive Frequency Hopping 215
50.3 Sniff Mode for Low Power Consumption 215
50.4 Role and Topology Management 216
50.5 Extended Inquiry Response 217

2024-05-13 | Copyright © 2024 Apple Inc. All Rights Reserved.

50.6 Secure Simple Pairing 217
50.7 Pairing Button 217
50.8 Class of Device (CoD) 218
50.9 Link Supervision Timeout 218
50.10 Delay Reporting 218
50.11 Profiles 218
50.11.1 Device ID Profile (DID) 218
50.11.2 Service Discovery Protocol (SDP) 219
50.11.3 Hands-Free Profile (HFP) 219
50.11.4 Message Access Profile (MAP) 221
50.11.5 Audio/Video Remote Control Profile (AVRCP) 222
50.11.6 Advanced Audio Distribution Profile (A2DP) 224
50.12 Audio Routing 224
50.12.1 Audio Data Received using HFP Profile 224
50.12.2 Audio Data Received using A2DP Profile 224
50.13 HID 226

51. Bluetooth Low Energy (BLE) 227
51.1 Role 227
51.2 Advertising Channels 227
51.3 Advertising PDU 227
51.4 Advertising Data 227
51.5 Advertising Interval 228
51.6 Connection Parameters 229
51.7 Data Packet Length Extension 229
51.8 Privacy 230
51.9 Permissions 230
51.10 Pairing 230
51.11 MTU Size 231
51.12 Services 231
51.12.1 Generic Access Profile Service 231
51.12.2 Generic Attribute Profile Service 231
51.12.3 Device Information Service 232
51.12.4 Available Services 232
51.13 GATT Server 232

Modules 234

52. Apple USB-C Analog Headset Module 235

2024-05-13 | Copyright © 2024 Apple Inc. All Rights Reserved.

52.1 Overview 235
52.1.1 Additional Specifications & Support 236
52.1.2 Procurement 236
52.2 Mechanical 236
52.2.1 Shielding 236
52.3 Pad Assignments 237
52.4 Electrical 238
52.4.1 DAC Characteristics 238
52.5 C125 Dimensions 240
52.6 C125 Recommended Clamshell Shields 241
52.7 C125 Recommended Rear Shield 242

Components 243

53. Headset Remote and Microphone Transmitter 244
53.1 Overview 244
53.2 Requirements 244
53.3 Usage 249
53.3.1 Pin Assignments 250
53.3.2 Maximum Voltage and Current Ratings 250
53.3.3 Electrical Characteristics 251
53.3.4 Theory of Operation 252
53.3.5 Button Mode 253
53.3.6 Tone Mode 254
53.4 Button Detection Circuitry Usage 257
53.4.1 Button Detection Circuitry Adjustments 260

Connectors 261

54. USB-A Receptacle 262
54.1 Mechanical 262
54.2 Electrical 262

55. USB-C Plug 263
55.1 Overview 263
55.2 Mechanical 263
55.3 Electrical 264
55.3.1 Drawing Power 264

2024-05-13 | Copyright © 2024 Apple Inc. All Rights Reserved.

55.3.2 Providing Power 265
55.4 Test Procedures 265
55.4.1 Mechanical 265
55.4.2 Connector Test ID 265
55.4.3 Drawing Power 265

56. USB-C Receptacle 267
56.1 Overview 267
56.2 Mechanical 267
56.3 Electrical 267
56.3.1 Drawing Power 267
56.3.2 Providing Power 268
56.4 USB-C receptacle accessory keep-out 269
56.5 Test Procedures 270
56.5.1 Connector Test ID 270
56.5.2 Drawing Power 270
56.5.3 Providing Power 271

Tools 272

57. Accessory Developer Assistant (ADA) 273
57.1 Autofocus & Optical Image Stabilization Test Profile 273

References 275

58. Device Dimensional Drawings 276
58.1 iPhone 15 Pro Max 1 of 3 283
58.2 iPhone 15 Pro Max 2 of 3 284
58.3 iPhone 15 Pro Max 3 of 3 285
58.4 iPhone 15 Pro 1 of 3 286
58.5 iPhone 15 Pro 2 of 3 287
58.6 iPhone 15 Pro 3 of 3 288
58.7 iPhone 15 Plus 1 of 3 289
58.8 iPhone 15 Plus 2 of 3 290
58.9 iPhone 15 Plus 3 of 3 291
58.10 iPhone 15 1 of 3 292
58.11 iPhone 15 2 of 3 293
58.12 iPhone 15 3 of 3 294

2024-05-13 | Copyright © 2024 Apple Inc. All Rights Reserved.

58.13 iPhone 14 Pro Max 1 of 3 295
58.14 iPhone 14 Pro Max 2 of 3 296
58.15 iPhone 14 Pro Max 3 of 3 297
58.16 iPhone 14 Pro 1 of 3 298
58.17 iPhone 14 Pro 2 of 3 299
58.18 iPhone 14 Pro 3 of 3 300
58.19 iPhone 14 Plus 1 of 3 301
58.20 iPhone 14 Plus 2 of 3 302
58.21 iPhone 14 Plus 3 of 3 303
58.22 iPhone 14 1 of 3 304
58.23 iPhone 14 2 of 3 305
58.24 iPhone 14 3 of 3 306
58.25 iPhone 13 Pro Max 1 of 2 307
58.26 iPhone 13 Pro Max 2 of 2 308
58.27 iPhone 13 Pro 1 of 2 309
58.28 iPhone 13 Pro 2 of 2 310
58.29 iPhone 13 1 of 2 311
58.30 iPhone 13 2 of 2 312
58.31 iPhone 13 mini 1 of 2 313
58.32 iPhone 13 mini 2 of 2 314
58.33 iPhone 12 Pro Max 1 of 2 315
58.34 iPhone 12 Pro Max 2 of 2 316
58.35 iPhone 12 Pro 1 of 2 317
58.36 iPhone 12 Pro 2 of 2 318
58.37 iPhone 12 1 of 2 319
58.38 iPhone 12 2 of 2 320
58.39 iPhone 12 mini 1 of 2 321
58.40 iPhone 12 mini 2 of 2 322
58.41 iPhone SE (3rd generation) and iPhone SE (2nd generation) 323
58.42 iPhone 11 Pro Max 324
58.43 iPhone 11 Pro 325
58.44 iPhone 11 326
58.45 iPhone XS Max 327
58.46 iPhone XS 328
58.47 iPhone XR 329
58.48 iPhone X 330
58.49 iPhone 8 Plus 331
58.50 iPhone 8 332
58.51 iPhone 7 Plus 333

2024-05-13 | Copyright © 2024 Apple Inc. All Rights Reserved.

58.52 iPhone 7 334
58.53 iPhone 6s Plus 335
58.54 iPhone 6s 336
58.55 iPhone 6 Plus 337
58.56 iPhone 6 338
58.57 iPhone 5s and iPhone SE 339
58.58 iPhone 5c 340
58.59 iPhone 5 341
58.60 iPad Pro 13-inch (M4) 1 of 5 342
58.61 iPad Pro 13-inch (M4) 2 of 5 343
58.62 iPad Pro 13-inch (M4) 3 of 5 344
58.63 iPad Pro 13-inch (M4) 4 of 5 345
58.64 iPad Pro 13-inch (M4) 5 of 5 346
58.65 iPad Pro 11-inch (M4) 1 of 5 347
58.66 iPad Pro 11-inch (M4) 2 of 5 348
58.67 iPad Pro 11-inch (M4) 3 of 5 349
58.68 iPad Pro 11-inch (M4) 4 of 5 350
58.69 iPad Pro 11-inch (M4) 5 of 5 351
58.70 iPad Air 13-inch (M2) 1 of 5 352
58.71 iPad Air 13-inch (M2) 2 of 5 353
58.72 iPad Air 13-inch (M2) 3 of 5 354
58.73 iPad Air 13-inch (M2) 4 of 5 355
58.74 iPad Air 13-inch (M2) 5 of 5 356
58.75 iPad Air 11-inch (M2) 1 of 5 357
58.76 iPad Air 11-inch (M2) 2 of 5 358
58.77 iPad Air 11-inch (M2) 3 of 5 359
58.78 iPad Air 11-inch (M2) 4 of 5 360
58.79 iPad Air 11-inch (M2) 5 of 5 361
58.80 iPad Pro 12.9-inch (6th generation) 1 of 5 362
58.81 iPad Pro 12.9-inch (6th generation) 2 of 5 363
58.82 iPad Pro 12.9-inch (6th generation) 3 of 5 364
58.83 iPad Pro 12.9-inch (6th generation) 4 of 5 365
58.84 iPad Pro 12.9-inch (6th generation) 5 of 5 366
58.85 iPad Pro 11-inch (4th generation) 1 of 5 367
58.86 iPad Pro 11-inch (4th generation) 2 of 5 368
58.87 iPad Pro 11-inch (4th generation) 3 of 5 369
58.88 iPad Pro 11-inch (4th generation) 4 of 5 370
58.89 iPad Pro 11-inch (4th generation) 5 of 5 371
58.90 iPad (10th generation) 1 of 6 372

2024-05-13 | Copyright © 2024 Apple Inc. All Rights Reserved.

58.91 iPad (10th generation) 2 of 6 373
58.92 iPad (10th generation) 3 of 6 374
58.93 iPad (10th generation) 4 of 6 375
58.94 iPad (10th generation) 5 of 6 376
58.95 iPad (10th generation) 6 of 6 377
58.96 iPad Air (5th generation) and iPad Air (4th generation) 1 of 5 378
58.97 iPad Air (5th generation) and iPad Air (4th generation) 2 of 5 379
58.98 iPad Air (5th generation) and iPad Air (4th generation) 3 of 5 380
58.99 iPad Air (5th generation) and iPad Air (4th generation) 4 of 5 381
58.100 iPad Air (5th generation) and iPad Air (4th generation) 5 of 5 382
58.101 iPad mini (6th generation) 1 of 6 383
58.102 iPad mini (6th generation) 2 of 6 384
58.103 iPad mini (6th generation) 3 of 6 385
58.104 iPad mini (6th generation) 4 of 6 386
58.105 iPad mini (6th generation) 5 of 6 387
58.106 iPad mini (6th generation) 6 of 6 388
58.107 iPad (9th generation), iPad (8th generation) and iPad (7th generation) 1 of 4 389
58.108 iPad (9th generation), iPad (8th generation) and iPad (7th generation) 2 of 4 390
58.109 iPad (9th generation), iPad (8th generation) and iPad (7th generation) 3 of 4 391
58.110 iPad (9th generation), iPad (8th generation) and iPad (7th generation) 4 of 4 392
58.111 iPad Pro 12.9-inch (5th generation) 1 of 5 393
58.112 iPad Pro 12.9-inch (5th generation) 2 of 5 394
58.113 iPad Pro 12.9-inch (5th generation) 3 of 5 395
58.114 iPad Pro 12.9-inch (5th generation) 4 of 5 396
58.115 iPad Pro 12.9-inch (5th generation) 5 of 5 397
58.116 iPad Pro 11-inch (3rd generation) 1 of 5 398
58.117 iPad Pro 11-inch (3rd generation) 2 of 5 399
58.118 iPad Pro 11-inch (3rd generation) 3 of 5 400
58.119 iPad Pro 11-inch (3rd generation) 4 of 5 401
58.120 iPad Pro 11-inch (3rd generation) 5 of 5 402
58.121 iPad Pro 12.9-inch (4th generation) 1 of 5 403
58.122 iPad Pro 12.9-inch (4th generation) 2 of 5 404
58.123 iPad Pro 12.9-inch (4th generation) 3 of 5 405
58.124 iPad Pro 12.9-inch (4th generation) 4 of 5 406
58.125 iPad Pro 12.9-inch (4th generation) 5 of 5 407
58.126 iPad Pro 11-inch (2nd generation) 1 of 5 408
58.127 iPad Pro 11-inch (2nd generation) 2 of 5 409
58.128 iPad Pro 11-inch (2nd generation) 3 of 5 410
58.129 iPad Pro 11-inch (2nd generation) 4 of 5 411

2024-05-13 | Copyright © 2024 Apple Inc. All Rights Reserved.

58.130 iPad Pro 11-inch (2nd generation) 5 of 5 412
58.131 iPad Air (3rd generation) with Wi-Fi 1 of 3 413
58.132 iPad Air (3rd generation) with Wi-Fi 2 of 3 414
58.133 iPad Air (3rd generation) with Wi-Fi 3 of 3 415
58.134 iPad Air (3rd generation) with Wi-Fi + Cellular 1 of 3 416
58.135 iPad Air (3rd generation) with Wi-Fi + Cellular 2 of 3 417
58.136 iPad Air (3rd generation) with Wi-Fi + Cellular 3 of 3 418
58.137 iPad mini (5th generation) with Wi-Fi 1 of 3 419
58.138 iPad mini (5th generation) with Wi-Fi 2 of 3 420
58.139 iPad mini (5th generation) with Wi-Fi 3 of 3 421
58.140 iPad mini (5th generation) with Wi-Fi + Cellular 1 of 3 422
58.141 iPad mini (5th generation) with Wi-Fi + Cellular 2 of 3 423
58.142 iPad mini (5th generation) with Wi-Fi + Cellular 3 of 3 424
58.143 iPad Pro 12.9-inch (3rd generation) 1 of 3 425
58.144 iPad Pro 12.9-inch (3rd generation) 2 of 3 426
58.145 iPad Pro 12.9-inch (3rd generation) 3 of 3 427
58.146 iPad Pro 11-inch (1st generation) 1 of 3 428
58.147 iPad Pro 11-inch (1st generation) 2 of 3 429
58.148 iPad Pro 11-inch (1st generation) 3 of 3 430
58.149 iPad Pro 12.9-inch (2nd generation) with Wi-Fi 431
58.150 iPad Pro 12.9-inch (2nd generation) with Wi-Fi + Cellular 432
58.151 iPad Pro 12.9-inch (2nd generation) Magnet/Hall Effect Sensors 1 of 2 433
58.152 iPad Pro 12.9-inch (2nd generation) Magnet/Hall Effect Sensors 2 of 2 434
58.153 iPad Pro 10.5-inch with Wi-Fi 435
58.154 iPad Pro 10.5-inch with Wi-Fi + Cellular 436
58.155 iPad Pro 10.5-inch Magnet/Hall Effect Sensors 1 of 2 437
58.156 iPad Pro 10.5-inch Magnet/Hall Effect Sensors 2 of 2 438
58.157 iPad (5th and 6th generation) with Wi-Fi + Cellular 439
58.158 iPad (5th and 6th generation) Magnet/Hall Effect Sensors 1 of 2 440
58.159 iPad (5th and 6th generation) Magnet/Hall Effect Sensors 2 of 2 441
58.160 iPad Pro 9.7-inch with Wi-Fi 442
58.161 iPad Pro 9.7-inch with Wi-Fi + Cellular 443
58.162 iPad Pro 9.7-inch Magnet/Hall Effect Sensors 1 of 2 444
58.163 iPad Pro 9.7-inch Magnet/Hall Effect Sensors 2 of 2 445
58.164 iPad Pro 12.9-inch (1st generation) with Wi-Fi 446
58.165 iPad Pro 12.9-inch (1st generation) with Wi-Fi + Cellular 447
58.166 iPad Pro 12.9-inch (1st generation) Magnet/Hall Effect Sensors 1 of 2 448
58.167 iPad Pro 12.9-inch (1st generation) Magnet/Hall Effect Sensors 2 of 2 449
58.168 iPad mini 4 with Wi-Fi 450

2024-05-13 | Copyright © 2024 Apple Inc. All Rights Reserved.

58.169 iPad mini 4 with Wi-Fi + Cellular 451
58.170 iPad mini 4 Magnet/Hall Effect Sensors 452
58.171 iPad Air 2 with Wi-Fi 453
58.172 iPad Air 2 with Wi-Fi + Cellular 454
58.173 iPad mini 2 and iPad mini 3 with Wi-Fi 455
58.174 iPad mini 2 and iPad mini 3 with Wi-Fi + Cellular 456
58.175 iPad Air with Wi-Fi 457
58.176 iPad Air with Wi-Fi + Cellular 458
58.177 iPad mini with Wi-Fi 459
58.178 iPad mini with Wi-Fi + Cellular 460
58.179 iPad (4th generation) with Wi-Fi 461
58.180 iPad (4th generation) with Wi-Fi + Cellular 462
58.181 Apple Watch Ultra 2, 1 of 3 463
58.182 Apple Watch Ultra 2, 2 of 3 464
58.183 Apple Watch Ultra 2, 3 of 3 465
58.184 Apple Watch Series 9, 45 mm 466
58.185 Apple Watch Series 9, 41 mm 467
58.186 Apple Watch Ultra, 1 of 3 468
58.187 Apple Watch Ultra, 2 of 3 469
58.188 Apple Watch Ultra, 3 of 3 470
58.189 Apple Watch Series 8, 45 mm 471
58.190 Apple Watch Series 8, 41 mm 472
58.191 Apple Watch SE, 44 mm 473
58.192 Apple Watch SE, 40 mm 474
58.193 Apple Watch Series 7, 45 mm 475
58.194 Apple Watch Series 7, 41 mm 476
58.195 Apple Watch Series 6, 44 mm 477
58.196 Apple Watch Series 6, 40 mm 478
58.197 Apple Watch SE (1st generation), 44 mm 479
58.198 Apple Watch SE (1st generation), 40 mm 480
58.199 Apple Watch Series 5, 44 mm 481
58.200 Apple Watch Series 5, 40 mm 482
58.201 Apple Watch Series 5 Ceramic, 44 mm 483
58.202 Apple Watch Series 5 Ceramic, 40 mm 484
58.203 Apple Watch Series 4, 44 mm 485
58.204 Apple Watch Series 4, 40 mm 486
58.205 Apple Watch Series 3 Ceramic, 42 mm 487
58.206 Apple Watch Series 3 Ceramic, 38 mm 488
58.207 Apple Watch Series 3 Metal, 42 mm 489

2024-05-13 | Copyright © 2024 Apple Inc. All Rights Reserved.

58.208 Apple Watch Series 3 Metal, 38 mm 490
58.209 Apple Watch Series 2 Ceramic, 42 mm 491
58.210 Apple Watch Series 2 Ceramic, 38 mm 492
58.211 Apple Watch Series 2 Metal, 42 mm 493
58.212 Apple Watch Series 2 Metal, 38 mm 494
58.213 Apple Watch (1st generation) and Apple Watch Series 1, 42 mm 495
58.214 Apple Watch (1st generation) and Apple Watch Series 1, 38 mm 496
58.215 Apple Vision Pro 1 of 6 497
58.216 Apple Vision Pro 2 of 6 498
58.217 Apple Vision Pro 3 of 6 499
58.218 Apple Vision Pro 4 of 6 500
58.219 Apple Vision Pro 5 of 6 501
58.220 Apple Vision Pro 6 of 6 502
58.221 Apple Vision Pro Battery 503
58.222 Apple Vision Pro Audio Strap 504
58.223 ZEISS Optical Inserts 1 of 4 505
58.224 ZEISS Optical Inserts 2 of 4 506
58.225 ZEISS Optical Inserts 3 of 4 507
58.226 ZEISS Optical Inserts 4 of 4 508
58.227 MagSafe Charging Case (USB-C) for AirPods Pro (2nd generation) 1 of 3 509
58.228 MagSafe Charging Case (USB-C) for AirPods Pro (2nd generation) 2 of 3 510
58.229 MagSafe Charging Case (USB-C) for AirPods Pro (2nd generation) 3 of 3 511
58.230 MagSafe Charging Case for AirPods Pro (2nd generation) 1 of 3 512
58.231 MagSafe Charging Case for AirPods Pro (2nd generation) 2 of 3 513
58.232 MagSafe Charging Case for AirPods Pro (2nd generation) 3 of 3 514
58.233 AirPods Pro (2nd generation) 515
58.234 MagSafe Charging Case for AirPods (3rd generation) 516
58.235 AirPods (3rd generation) 517
58.236 Wireless Charging Case for AirPods Pro (1st generation) 518
58.237 AirPods Pro (1st generation) 519
58.238 Wireless Charging Case for AirPods 520
58.239 AirPods (1st generation) and AirPods (2nd generation) 521
58.240 AirTag 522
58.241 Apple TV 4K (3rd generation) 523
58.242 Siri Remote (3rd generation) 524

Revision History 525
Added Content 525
Updated Content 526

Overview

1. Introduction

Note:
These Accessory Design Guidelines for Apple Devices ('Guidelines') are subject to the terms and conditions set forth on the final page of this document. By downloading, accessing, or otherwise utilizing these Guidelines, you agree to be bound by, and only utilize the Guidelines in accordance with, such terms and conditions.

These guidelines address:

- The physical design of cases, covers, screen overlays, and camera attachments for iOS and iPadOS devices.
- The specifications for hardware accessories using USB-C to interface with iOS and iPadOS devices.
- The specifications for hardware accessories using the Bluetooth transport to communicate with iOS devices, iPadOS devices, watchOS devices, tvOS devices, and Mac computers.
- The design of AC power adapters and battery packs for iOS devices, iPadOS devices, and AirPods.
- The design of Qi wireless transmitters for iOS devices and AirPods.
- The physical design of band accessories compatible with Apple Watch.
- The physical design of accessories compatible with Apple Vision Pro.

These guidelines do not address other aspects of accessory communication. Instead, see the Apple MFi Licensing Program (page 24) and the Accessory Interface Specification (page 24).

2024-05-13 | Copyright © 2024 Apple Inc. All Rights Reserved.

2. Requirements

The use of the words *shall*, *shall not*, *required*, *prohibited*, *should*, *should not*, *recommended*, *not recommended*, *may*, *optional*, and *deprecated* in a statement have the following meanings:

- *shall*, or *required* means the statement is an absolute requirement.
- *shall not* or *prohibited* means the statement is an absolute prohibition.
- *should* or *recommended* means the full implications shall be understood before choosing a different course.
- *should not* or *not recommended* means the full implications shall be understood before choosing this course.
- *may* or *optional* means the statement is truly optional, and its presence or absence cannot be assumed.
- *deprecated* means the statement is provided for historical purposes only and is equivalent to 'shall not'.

2024-05-13 | Copyright © 2024 Apple Inc. All Rights Reserved.

3. Terminology

3.1 Device

Device refers to an iPhone or iPad.

iOS device refers to an iPhone running iOS.

iPadOS device refers to an iPad running iPadOS.

watchOS device refers to an Apple Watch running watchOS.

tvOS device refers to an Apple TV running tvOS.

Where appropriate, specific Apple product and operating system references will also be used.

3.2 Accessory

Accessory refers to any product connecting to a *device* using the interfaces described in this specification.

3.3 Component

A *component* is a functional unit or a constituent part of an accessory. Components inter-connect and function as a part of a greater system. Examples include:

- Integrated circuits, micro-processors, flash memory, microphones, and speakers.
- Data transport interface, such as a Lightning connector, USB connector, or Bluetooth radio.
- Power sources, such as a battery or power supply.
- Human Interface Device (HID) Control Surface (page 23), such as a play/pause button.

A *component* may also refer to a group or collection, such as the keyboard portion of a keyboard/trackpad accessory.

2024-05-13 | Copyright © 2024 Apple Inc. All Rights Reserved.

3.4 Control Surface

A *control surface* is a human interface device (HID) component enabling user interaction with an accessory. Examples include:

- Connectors
- Buttons
- Switches
- Rotary knobs
- Joysticks
- Touchscreens or touch-sensitive surfaces
- Microphones
- Motion/presence sensors

References to specific types of control surfaces such as buttons or switches are only applicable to those control surface types. If a requirement calls for a physical button to be implemented, a physical button shall be present.

3.5 Direct User Action

A *direct user action* is defined as user interaction with an accessory using a Control Surface (page 23). Examples include:

- Physical gestures, such as:
  - Attaching an accessory to a device.
  - Pressing a button.
  - Actuating a switch.
  - Turning a knob.
  - Interacting with a touchscreen.
  - Waving a hand.
  - Moving in/out of range (for wireless accessories).
- Voice input.

Accessories shall not autonomously perform user inputs unless explicitly authorized by the user.

3.6 Built-In Cable

A *built-in cable* is a cable with one end permanently attached to the accessory enclosure.

Copyright © 2024 Apple Inc. All Rights Reserved.

3.7 Accessory Interface Specification

The *Accessory Interface Specification* is available to members of the Apple MFi Licensing Program (page 24).

Use of some features requires accessory developers to be a member of the program and to integrate specific MFi hardware into the accessory.

3.8 Apple MFi Licensing Program

The Apple MFi licensing program provides access to specifications, components, connectors, and other resources to create accessories capable of communicating with devices.

See https://mfi.apple.com for more information.

2024-05-13 | Copyright © 2024 Apple Inc. All Rights Reserved.

Accessories

4. All Accessories

Requirements in this section apply to all accessories regardless of their supported features.

4.1 Scratches and Damage

Accessories shall not scratch or damage any device.

Accessories with abrasive surfaces and sharp edges (such as hard plastic, metal, or glass) shall not contact the active area of the device display.

4.2 Compliance Testing

Accessories shall not assume evidence of functionality when attached to a device means the accessory is specification compliant. Such an approach does not account for future devices or software releases, and runs a high risk of dependence on un-documented device behavior which is subject to change at any time.

If available, accessories should validate their design and implementation using the recommended test procedures for all supported features.

4.3 Integrated USB Receptacles

Accessories incorporating a USB receptacle to draw power from external sources shall meet the following requirements:

- USB-B receptacles shall comply with the *USB Battery Charging Specification, Release 1.2*.
- USB-C receptacles shall comply with the requirements in Drawing Power (page 267).

2024-05-13 | Copyright © 2024 Apple Inc. All Rights Reserved.

4.4 User Supplied Cables and AC Power Adapters

Accessories intended for use with user-supplied cables and/or AC power adapters shall be designed to work with any cables, AC Power Adapters (page 78), or Battery Packs (page 81) compliant with this specification, including Apple branded cables and AC power adapters. Such accessories shall not declare compatibility with only Apple branded USB cables or AC power adapters.

This compatibility requirement applies to all aspects of user-supplied cables and power adapters. For example:

- Connector receptacles on accessories shall accommodate all specification-compliant connector overmolds, and any accessory opening surrounding the device receptacle shall provide sufficient clearance for specification-compliant connector overmolds.
- Accessories shall work with all specification-compliant cables in regards to electrical DCR and SI.

Such accessories shall be tested with a wide variety of specification-compliant cables (including various lengths of the same cable if applicable) and AC power adapters during accessory development, in addition to Apple branded cables and AC power adapters.

4.5 TDMA Noise

GSM phones emit radiated and conducted RF noise, which can produce time division multiple access (TDMA) sounds from audio outputs. Accessories shall minimize coupling of audible interference from the device (commonly known as *TDMA noise* or *chopper noise*) into an accessory's electronics.

4.6 Attachments

Accessories shall remain compliant with the specification when connected to any attachments designed for the accessory.

Examples of accessory attachments include, but are not limited to:

- Car or desk mounts for a case.
- Wireless charging mats for a dongle or case.
- Detachable barcode scanners/credit card readers for a dock.

4.7 Magnetic Interference

Unless otherwise specified, Apple recommends avoiding the use of magnets and metal components in accessories.

2024-05-13 | Copyright © 2024 Apple Inc. All Rights Reserved.

Accessories claiming compatibility with a device with a digital compass (magnetometer) shall minimize interference with the digital compass and shall not repeatedly trigger compass recalibration.

Accessories claiming compatibility with a device with autofocus (AF) and/or optical image stabilization (OIS) shall not affect the operation of those features.

The following devices feature optical image stabilization:

- iPhone 15 Pro Max
- iPhone 15 Pro
- iPhone 15 Plus
- iPhone 15
- iPhone 14 Pro Max
- iPhone 14 Pro
- iPhone 14 Plus
- iPhone 14
- iPhone SE (3rd generation)
- iPhone 13 Pro Max
- iPhone 13 Pro
- iPhone 13
- iPhone 13 mini
- iPhone 12 Pro Max
- iPhone 12 Pro
- iPhone 12
- iPhone 12 mini
- iPhone SE (2nd generation)
- iPhone 11 Pro Max
- iPhone 11 Pro
- iPhone 11
- iPhone XS Max
- iPhone XS
- iPhone XR
- iPhone X
- iPhone 8 Plus
- iPhone 8
- iPhone 7 Plus
- iPhone 7
- iPhone 6s Plus
- iPhone 6 Plus
- iPad Pro 12.9-inch (2nd generation)
- iPad Pro 10.5-inch

2024-05-13 | Copyright © 2024 Apple Inc. All Rights Reserved.

4.8 Radio Frequency (RF) Performance

This section contains RF performance requirements and recommendations for accessories.

4.8.1 Materials and Coatings

Accessories should avoid use of:

- Metals
- Conductive materials or coatings
- Materials with high dielectric (permittivity >5 F/m)

Such materials absorb radio frequency energy and may impair or degrade the performance of antennas for cellular communication, GPS, Wi-Fi, Bluetooth, and NFC.

Examples include, but are not limited to:

- Steel, aluminum, magnesium, titanium, etc.
- Plastics with any carbon content, glass content, or metallic plating
- Metallic paints
- Black paints with high carbon loading
- White paints with high titanium dioxide loading
- Metallic Physical Vapor Deposition (PVD) coatings

4.8.2 Antenna Keep-Out

Antenna keep-out regions can be found in Device Dimensional Drawings (page 276).

Accessory Materials and Coatings (page 29) which absorb radio frequency energy located in the antenna keep-out region have a higher risk of degrading device's wireless performance.

4.8.3 Over The Air (OTA) Transmission/Reception

Accessories shall not excessively degrade device's RF transmission efficiency. This can be quantified by measuring Total Radiated Power (TRP) across all of the device's operating bands.

Accessories shall not excessively degrade device's RF reception sensitivity. This can be quantified by measuring Effective Isotropic Sensitivity (EIS) across all of the device's operating bands.

Accessories may have a higher risk of excessively degrading device's RF performance if they:

- Contain magnets.
- Intrude on device Antenna Keep-Out (page 29) zones.
- Contain active electronic circuitry, such as:
  - Bluetooth radios.
  - Switched-mode power supplies.

2024-05-13 | Copyright © 2024 Apple Inc. All Rights Reserved.

- High speed data interfaces.

Accessory configurations shall be taken into account when designing for maximum RF compatibility. Examples include, but are not limited to:

- Accessory on/off.
- Accessory open/closed.
- Attachments (page 27) present/not present.

Good design practices shall be followed to minimize emissions and maximize RF compatibility. These include, but are not limited to:

- Shielding digital circuitry and clock signals.
- Minimizing radiation from digital interfaces.
- Decoupling high frequency signals and power supplies.
- Filtering off-board signals.
- Maintaining ground plane circuit board integrity.
- Minimizing current loop areas.
- Ensuring proper cable shielding terminations.

4.8.4 Specific Absorption Rate (SAR)

A list of labs performing SAR testing with devices is available through the Apple MFi Licensing Program (page 24).

4.8.5 Near Field Communication (NFC)

Accessories shall not degrade device's NFC transaction performance.

Accessories may have a higher risk of degrading device's NFC transaction performance if they intrude on device Antenna Keep-Out (page 29) zones.

The following devices are NFC enabled:

- iPhone 15 Pro Max
- iPhone 15 Pro
- iPhone 15 Plus
- iPhone 15
- iPhone 14 Pro Max
- iPhone 14 Pro
- iPhone 14 Plus
- iPhone 14
- iPhone SE (3rd generation)
- iPhone 13 Pro Max
- iPhone 13 Pro

2024-05-13 | Copyright © 2024 Apple Inc. All Rights Reserved.

- iPhone 13
- iPhone 13 mini
- iPhone 12 Pro Max
- iPhone 12 Pro
- iPhone 12
- iPhone 12 mini
- iPhone SE (2nd generation)
- iPhone 11 Pro Max
- iPhone 11 Pro
- iPhone 11
- iPhone XS Max
- iPhone XS
- iPhone XR
- iPhone X
- iPhone 8 Plus
- iPhone 8
- iPhone 7 Plus
- iPhone 7
- iPhone SE
- iPhone 6s Plus
- iPhone 6s
- iPhone 6 Plus
- iPhone 6

4.9 Thermal Management

The accessory's supported temperature range shall be greater than or equal to the published temperature ranges of every device it claims compatibility with.

4.10 Tripod Connections

Tripod connections shall comply with ISO 1222:2010. See https://www.iso.org/standard/55918.html.

2024-05-13 | Copyright © 2024 Apple Inc. All Rights Reserved.

5. Cases

Cases are accessories substantially enclosing devices.

Accessories substantially enclosing devices shall comply with the requirements stated in this chapter unless the accessory supports other features in this specification whose requirements conflict with the requirements in this chapter.

If the case has multiple user-detachable components substantially enclosing the device, the requirements shall be applied to each component separately.

5.1 Product Design

A well-designed case will securely house a device without interfering with the device's operation. Significant factors in mechanical design include access to the device's sensors, controls, and connectors. See Device Dimensional Drawings (page 276).

5.1.1 Device Protection

Cases shall protect the device from a 1 m drop onto a hard paved surface in any orientation.

Exposed glass on the device shall not come within 0.85 mm of a flat surface, such as a table or floor, in any orientation when the case is attached. Ideally the glass should not come within 1.00 mm. Device protection should be achieved by creating features around the exposed glass to keep it away from the flat surface.

Care should be given to the design of the bottom of the case to achieve both device protection and provide access to device speakers, microphones, and connectors. For example, the bottom of iPhone X cases should:

- Not have an opening wider than 50 mm, see dimension 'A' in Figure 5-1 (page 33).
- Be made of polycarbonate (PC) at least 1.15 mm thick, see dimension 'B' in Figure 5-1 (page 33).

2024-05-13 | Copyright © 2024 Apple Inc. All Rights Reserved.

Figure 5-1 Device protection

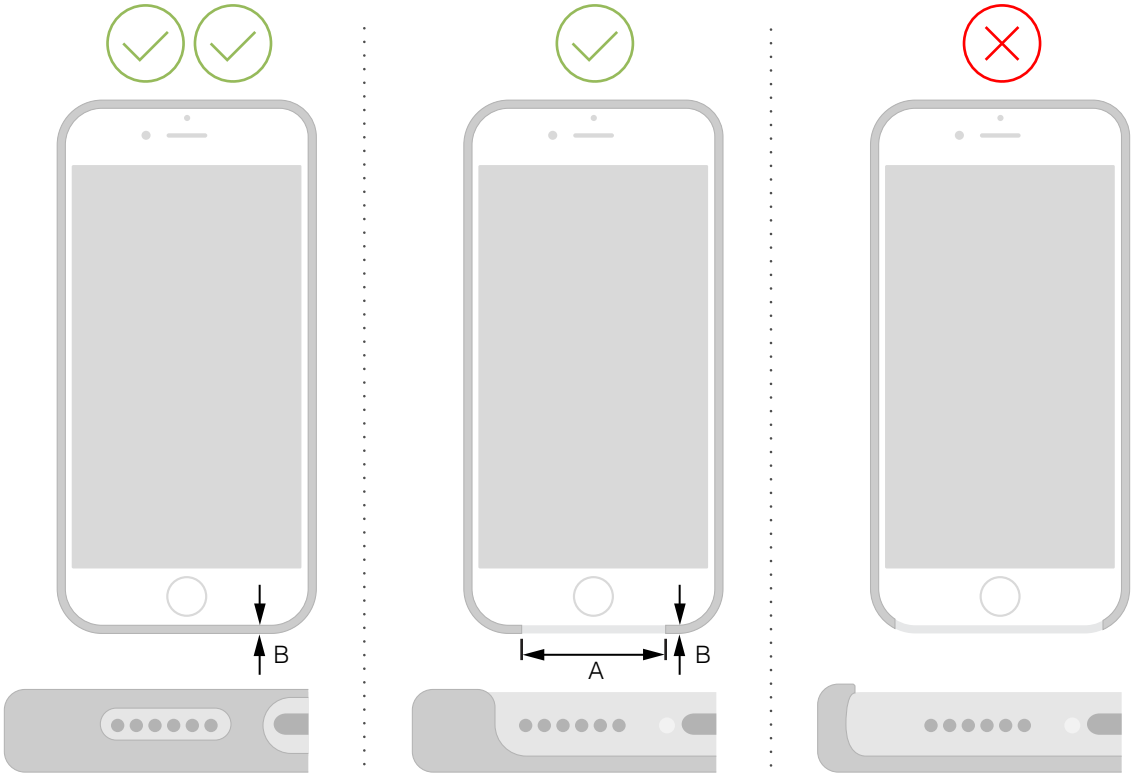

5.1.2 Access to Inputs and Interconnects

Cases shall readily permit user access to inputs and interconnects.

5.1.2.1 Access to Controls

Cases shall readily permit user access and operation of the device's mechanical controls, such as:

- Volume buttons.
- Ring/Silent switch.
- Action button.
- Side/Top button.
- Home button.
- Touch ID sensor.

5.1.2.2 Access to the USB-C Connector

If the case is for a device with a USB-C receptacle, the opening (that is, keep-out area):

- Shall be at least 12.35 mm by 6.50 mm.
- Should be at least 12.45 mm by 6.60 mm with full radii rounded edges for the greatest compatibility with the widest variety of cables and docks, see USB-C receptacle accessory keep-out (page 269).

2024-05-13 | Copyright © 2024 Apple Inc. All Rights Reserved.

USB-C connector openings shall be designed with enough margin to compensate for shifting or dimensional changes of the case material.

5.1.2.3 Access to the Lightning Connector

If the case is for a device with a Lightning receptacle, the opening (that is, keep-out area):

- Shall be at least 12.05 mm by 6.30 mm with full radii rounded edges.
- Should be at least 13.65 mm by 6.85 mm for the greatest compatibility with the widest variety of cables and docks, see Figure 5-2 (page 34).

Figure 5-2 Lightning Receptacle (C37) keep-out

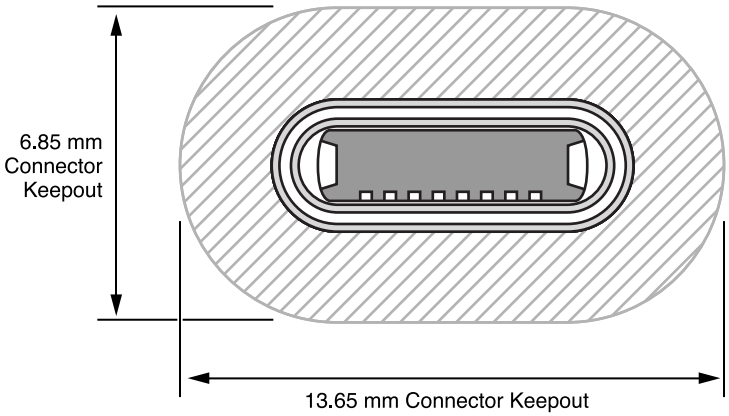

Lightning connector openings shall be designed with enough margin to compensate for shifting or dimensional changes of the case material.

5.1.2.4 Access to the Headset Jack

Cases shall provide easy access to a device's headset jack, if present.

The headset jack opening (that is, keep-out area):

- Shall be at least 6.0 mm in diameter and at most 14.0 mm deep.
- Should be at least 6.5 mm in diameter and at most 10.0 mm deep for the best compatibility with a range of headsets.

Headset jack openings shall be designed with enough margin to compensate for shifting or dimensional changes of the case material.

2024-05-13 | Copyright © 2024 Apple Inc. All Rights Reserved.

5.1.2.5 Touchscreen

Cases should not have any edges trapping water on the touchscreen when the device is held at a 30° angle relative to the horizon.

Cases shall allow a 120° opening, see Figure 5-3 (page 35), along the edges of a touchscreen's active area to ensure compatibility with touchscreen features. See Device Dimensional Drawings (page 276) for active areas.

Figure 5-3 Touchscreen keep-out angle

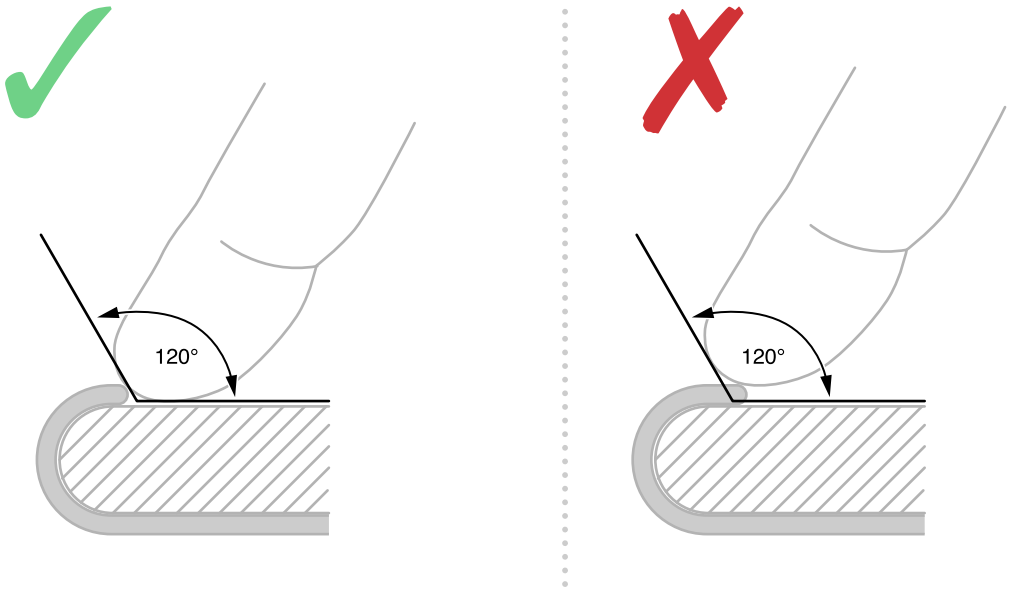

5.1.2.6 Edge Swipe Gestures

Users shall be able to easily use edge swipe gestures.

Examples of such gestures include, but are not limited to:

- Swipe in from the top edge for Control Center or Notification Center.
- Swipe in from the bottom edge for Home, App Switcher, or Reachability.
- Swipe in from the left edge in Messages or Mail to go back from a conversation.

The following devices make extensive use of edge swipe gestures in both portrait and landscape orientations:

- iPhone 15 Pro Max
- iPhone 15 Pro
- iPhone 15 Plus
- iPhone 15

2024-05-13 | Copyright © 2024 Apple Inc. All Rights Reserved.

- iPhone 14 Pro Max
- iPhone 14 Pro
- iPhone 14 Plus
- iPhone 14
- iPhone SE (3rd generation)
- iPhone 13 Pro Max
- iPhone 13 Pro
- iPhone 13
- iPhone 13 mini
- iPhone 12 Pro Max
- iPhone 12 Pro
- iPhone 12
- iPhone 12 mini
- iPhone SE (2nd generation)
- iPhone 11 Pro Max
- iPhone 11 Pro
- iPhone 11
- iPhone XS Max
- iPhone XS
- iPhone XR
- iPhone X
- iPad Pro 13-inch (M4)
- iPad Pro 11-inch (M4)
- iPad Air 13-inch (M2)
- iPad Air 11-inch (M2)
- iPad Pro 12.9-inch (6th generation)
- iPad Pro 11-inch (4th generation)
- iPad (10th generation)
- iPad Air (5th generation)
- iPad mini (6th generation)
- iPad Pro 12.9-inch (5th generation)
- iPad Pro 11-inch (3rd generation)
- iPad Air (4th generation)
- iPad Pro 12.9-inch (4th generation)
- iPad Pro 11-inch (2nd generation)
- iPad Pro 12.9-inch (3rd generation)
- iPad Pro 11-inch (1st generation)

2024-05-13 | Copyright © 2024 Apple Inc. All Rights Reserved.

5.1.2.7 Cover Glass Contact

Cases claiming compatibility with the following devices should not contact the cover glass as defined in their Device Dimensional Drawings (page 276):

- iPhone SE (3rd generation)
- iPhone SE (2nd generation)
- iPhone 11 Pro Max
- iPhone 11 Pro
- iPhone 11
- iPhone XS Max
- iPhone XS
- iPhone XR
- iPhone X
- iPhone 8 Plus
- iPhone 8
- iPhone 7 Plus
- iPhone 7
- iPhone 6s Plus
- iPhone 6s
- iPhone 6 Plus
- iPhone 6

5.1.3 Dock Compatibility

The distance from bottom of the device to the outside of a case should not exceed 1.8 mm for compatibility with docks.

5.1.4 Wireless Power and Rear Pockets

Cases claiming compatibility with MagSafe or Qi wireless power, see Device Power (Inductive) (page 145), shall not have rear pockets or holders for credit cards, RFID cards, or other similar items. Cards may be damaged and/or impact wireless charging performance.

5.2 Acoustics

Cases shall not impair or degrade the acoustic performance of a device.

2024-05-13 | Copyright © 2024 Apple Inc. All Rights Reserved.

5.2.1 Call Quality

Cases shall not impair or degrade the user experience making and receiving audio calls over a cellular network or audio/video calls using FaceTime in both handset and speakerphone modes. Cases should not change the frequency response of the speakers or microphones. In addition, the user should not hear any distortion or echo resulting from using the case.

Cases shall not obstruct any microphones during a phone call. Occluding microphones can result in call quality degradation.

5.2.2 Speaker to Microphone Coupling

Cases shall not facilitate the conduction of sound from any speaker to any microphone. Such sound conduction may cause echoing in phone calls.

5.2.3 Speaker/Microphone Openings

Device speaker/microphone port locations vary from model to model, see Device Dimensional Drawings (page 276).

5.2.3.1 Thin Cases (≤2.25 mm)

Microphone/speaker openings in thin cases should:

- Be offset at least 2.0 mm from the edge of any device speaker/microphone port.
- Be at most 1.5 mm thick along their inner diameter.
- Have a maximum 45° incoming angle to their inner diameter.
- Maintain a proper seal against the device between speaker/microphone ports.

2024-05-13 | Copyright © 2024 Apple Inc. All Rights Reserved.

Figure 5-4 Microphone/speaker opening recommendations for thin cases

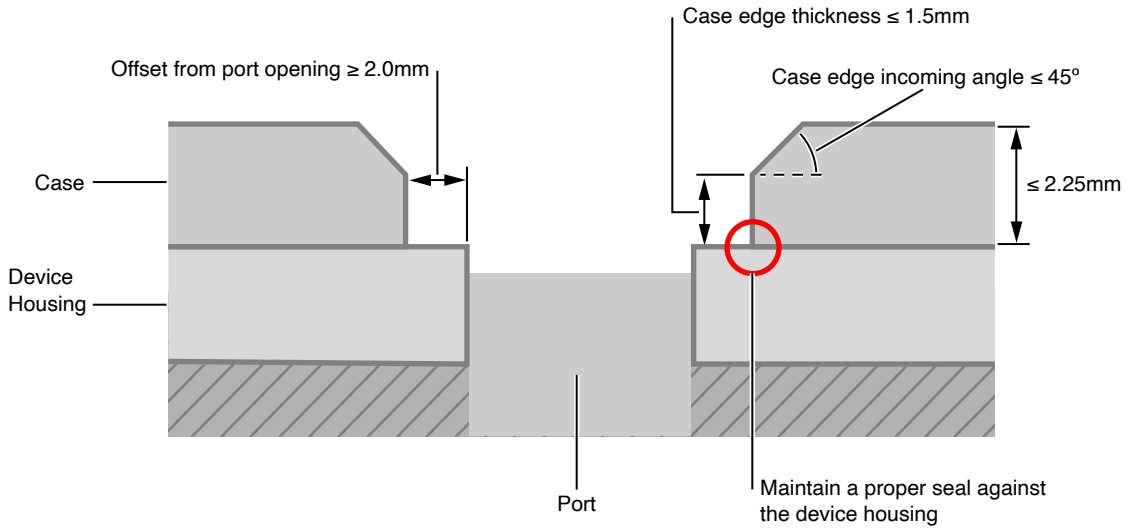

5.2.3.2 Thick Cases (>2.25 mm)

Speaker and microphone openings should be channeled independently and without interruption to/from the outside surface of a thick case.

Figure 5-5 Thick case acoustic channels

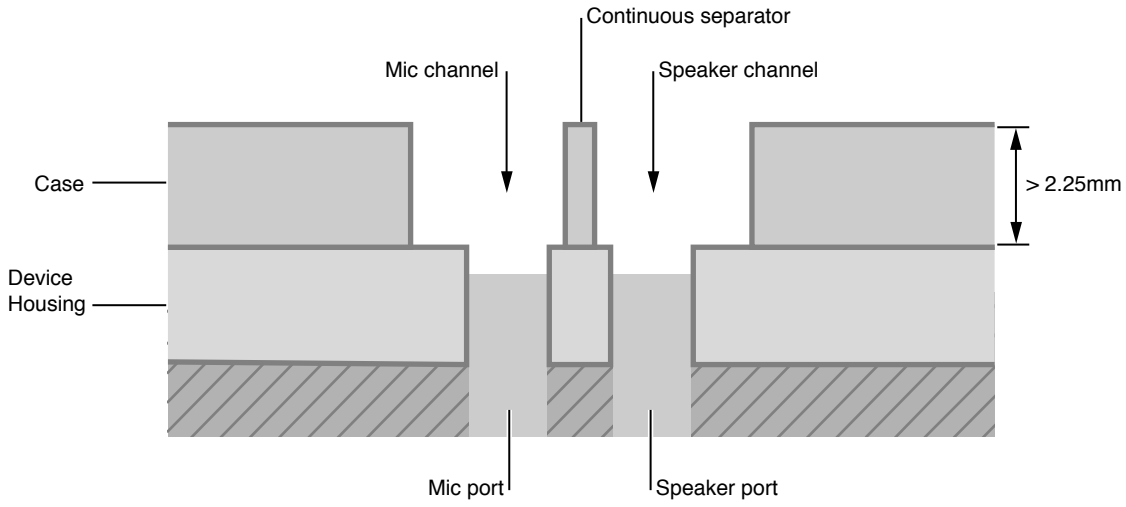

Thick cases should maximize exit separation between speaker and microphone channels.

2024-05-13 | Copyright © 2024 Apple Inc. All Rights Reserved.

Figure 5-6 Thick case microphone and speaker exit separation

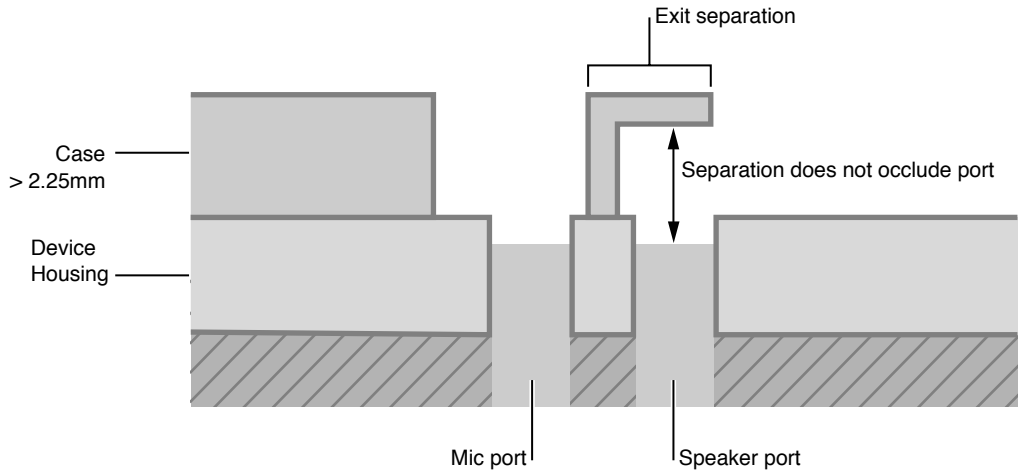

Thick case channels may act as a resonance chamber and detune microphone/speaker frequency response. The resulting frequency response may vary according to channel size/shape.

If a thick case does not maintain a proper seal against the device between microphone/speaker channels, the case itself may become an acoustic chamber.

Figure 5-7 Improper thick case seal

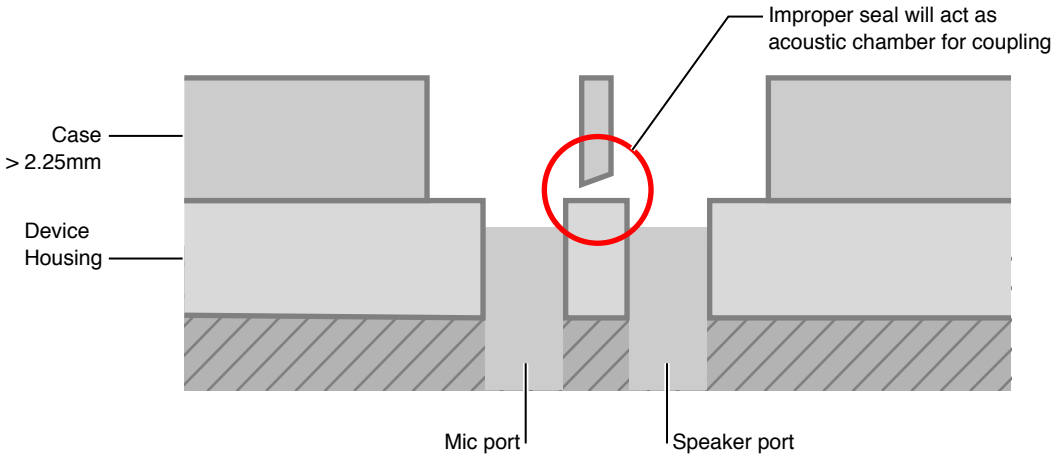

5.3 Ambient Light Sensor and Proximity Sensor

Ambient light sensor and proximity sensor locations for various devices are illustrated in the Device Dimensional Drawings (page 276). Some drawings indicate sensor keep-out areas.

5.4 Taptic Engine

Cases should not cause substantial change in the feel of the device's Taptic Engine.

The following devices contain a Taptic Engine:

- iPhone 15 Pro Max
- iPhone 15 Pro
- iPhone 15 Plus
- iPhone 15
- iPhone 14 Pro Max
- iPhone 14 Pro
- iPhone 14 Plus
- iPhone 14
- iPhone SE (3rd generation)
- iPhone 13 Pro Max
- iPhone 13 Pro
- iPhone 13
- iPhone 13 mini
- iPhone 12 Pro Max
- iPhone 12 Pro
- iPhone 12
- iPhone 12 mini
- iPhone SE (2nd generation)
- iPhone 11 Pro Max
- iPhone 11 Pro
- iPhone 11
- iPhone XS Max
- iPhone XS
- iPhone XR
- iPhone X
- iPhone 8 Plus
- iPhone 8
- iPhone 7 Plus
- iPhone 7
- iPhone 6s Plus

2024-05-13 | Copyright © 2024 Apple Inc. All Rights Reserved.

- iPhone 6s

5.5 Magnetic Interference

Cases shall not interfere with the device's:

- Magnetic compass.
- Rear camera autofocus (AF).
- Rear camera optical image stabilization (OIS), if present.
- Front camera autofocus, if present.

See Magnetic Interference (page 27) for additional details.

5.6 Touch ID

Cases shall not inhibit use of the device's Touch ID sensor. Touch ID sensor keep-outs are indicated in the Device Dimensional Drawings (page 276).

Cases overlaying the sensor may cause users to have difficulty using Touch ID.

5.7 Camera

The camera field of view (FOV) and the illumination provided by the flash are designed for each devices' camera. It is exceptionally important manufacturers consult Device Dimensional Drawings (page 276) for each device, and shall not assume any parameters are shared between devices.

Images from the camera may be affected by the geometry, color, and surface finish of the case, particularly when using a flash. Camera opening trim should be designed to avoid reflecting light into the camera.

5.7.1 Geometry

The camera lens FOV shall not be blocked. Making opening dimensions too small around the camera and flash may block the lens FOV and the illumination from the flash. Blocking the FOV may cause vignetting in the image, where one or more corners of the image are darker than the center. Blocking marginal rays just outside the lens FOV may also reduce the sharpness and contrast of the image. Blocking flash illumination may cause haze in the image, resulting in reduced contrast. See Device Dimensional Drawings (page 276) for camera keep-outs.

2024-05-13 | Copyright © 2024 Apple Inc. All Rights Reserved.

Case openings shall not be designed in a manner directing stray light into the camera lens. If the opening is too narrow or too steep, it may reflect light into the camera lens washing out the image or adding unwanted color casting. Adding a chamfer to the opening trim near the camera may help direct stray light away from the camera lens. When the device includes a flash, a narrow or steep opening may reflect light from the camera and flash opening back into the camera lens. This may cause images to appear washed out or cause unwanted artifacts. Designers should also ensure mechanical keep-outs as outlined in the Device Dimensional Drawings (page 276) are maintained with worst-case X-Y placement tolerances to minimize the risk of image haze.

5.7.2 Color

Light reflected from a case may carry the color of the case. Black material or black coatings may help avoid color bleeding into the camera lens from an external light source or the flash. The darker the color the less likely light from a flash or external source may be reflected off the case and into the camera lens. Apple recommends a semi-gloss black material or coating around the camera and flash openings.

5.7.3 Surface Finish

Matte or diffuse materials scatter light in all directions increasing the likelihood light from the flash or other strong light sources may be reflected into camera lenses. Semi-gloss materials may direct light away from the camera lens.

5.7.4 Image Degradation Examples

Figure 5-8 Sample image degradation by image blocking in an ambient condition

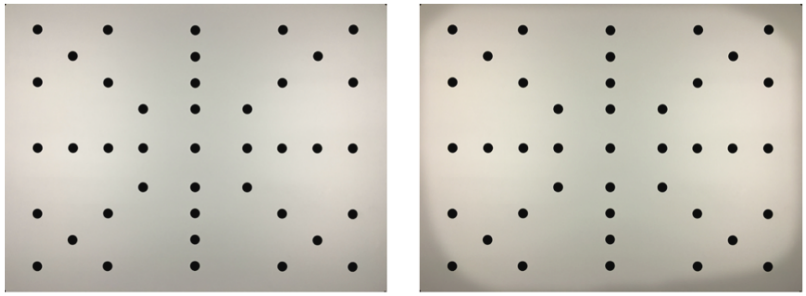

Figure 5-9 Sample image degradation by color shift through accessory with strong color

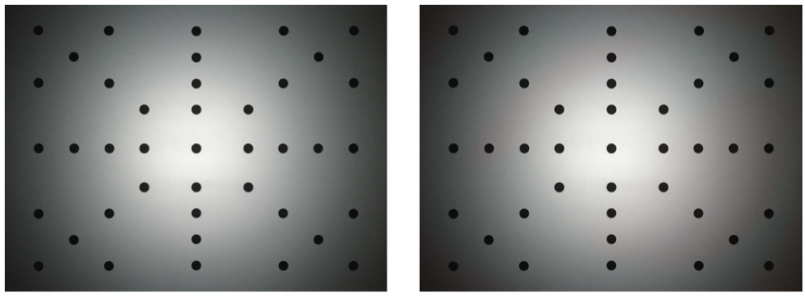

Figure 5-10 Sample image degradation by flash interference

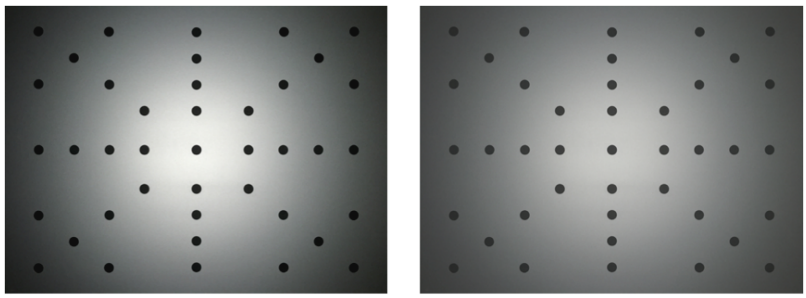

5.8 Reliability

Cases shall be tested to verify they will withstand long-term use under typical use conditions, and will not impair, functionally degrade a device, cause Scratches and Damage (page 26) to the device or its immediate surroundings, or adversely affect the user.

5.8.1 Device Insertion and Removal

Cases shall hold the device securely while permitting easy insertion and removal. A case shall not cause Scratches and Damage (page 26) to the device by the repeated insertion and removal of the device from the case under conditions representative of long-term use in a variety of environments.

2024-05-13 | Copyright © 2024 Apple Inc. All Rights Reserved.

5.8.2 Colorfastness

Dyes, inks, or coatings in or on the case shall not transfer or bleed color onto either the device or user, particularly while the case is in contact with common substances such as water, hand sanitizer, sunscreen or lotions.

5.9 Environmental

Cases shall comply with applicable environmental regulations for the regions in which such accessories are to be sold, as well as applicable substance or material restrictions including:

- Organic tin compounds, PFOS, PFOA, phthalates, azo dyes, polybrominated biphenyls (PBBs) and PAHs, per requirements of the EU REACh regulation EC 1907/2006.
- Nickel leach rate on surfaces in prolonged skin contact, per requirements of the EU REACh regulation EC 1907/2006.
- Cadmium, lead, hexavalent chromium, and nickel, per requirements of EU Directive 2009/48/EC.
- Natural rubber latex, per requirements of EU Directive EC 93/42/EEC.
- Dimethylfumarate (DMFu), per requirements of EU Regulation 412/2012.
- pH and Formaldehyde, per requirements of China GB 18401 for textiles and China GB 20400 for leather.
- Endangered species of flora and fauna in products or packaging (US Lacey Act).
- Polybrominated diphenyl ethers (PBDE).
- Compliance with California proposition 65, as applicable.

5.10 Test Procedures

5.10.1 Device Models

Case testing procedures vary depending on the device they enclose.

5.10.1.1 iPhone 15 Pro Max

Table 5-1 iPhone 15 Pro Max case testing matrix

Test	Using	Notes
Product Design (page 61)	iPhone 15 Pro Max	
MagSafe Case Magnet Array (page 172)	iPhone 15 Pro Max	Cases supporting MagSafe only.
Taptic Engine (page 63)	iPhone 15 Pro Max	
Autofocus & Optical Image Stabilization (page 65)	iPhone 15 Pro Max	

2024-05-13 | Copyright © 2024 Apple Inc. All Rights Reserved.

Test	Using	Notes
Near-Field Communication (NFC) (page 65)	iPhone 15 Pro Max	
Acoustics (page 67)	iPhone 15 Pro Max	

5.10.1.2 iPhone 15 Pro

Table 5-2 iPhone 15 Pro case testing matrix

Test	Using	Notes
Product Design (page 61)	iPhone 15 Pro	
MagSafe Case Magnet Array (page 172)	iPhone 15 Pro	Cases supporting MagSafe only.
Taptic Engine (page 63)	iPhone 15 Pro	
Autofocus & Optical Image Stabilization (page 65)	iPhone 15 Pro	
Near-Field Communication (NFC) (page 65)	iPhone 15 Pro	
Acoustics (page 67)	iPhone 15 Pro	

5.10.1.3 iPhone 15 Plus

Table 5-3 iPhone 15 Plus case testing matrix

Test	Using	Notes
Product Design (page 61)	iPhone 15 Plus	
MagSafe Case Magnet Array (page 172)	iPhone 15 Plus	Cases supporting MagSafe only.
Taptic Engine (page 63)	iPhone 15 Plus	
Autofocus & Optical Image Stabilization (page 65)	iPhone 15 Plus	
Near-Field Communication (NFC) (page 65)	iPhone 15 Plus	
Acoustics (page 67)	iPhone 15 Plus	

5.10.1.4 iPhone 15

Table 5-4 iPhone 15 case testing matrix

Test	Using	Notes
Product Design (page 61)	iPhone 15	
MagSafe Case Magnet Array (page 172)	iPhone 15	Cases supporting MagSafe only.
Taptic Engine (page 63)	iPhone 15	
Autofocus & Optical Image Stabilization (page 65)	iPhone 15	
Near-Field Communication (NFC) (page 65)	iPhone 15	
Acoustics (page 67)	iPhone 15	

2024-05-13 | Copyright © 2024 Apple Inc. All Rights Reserved.

5.10.1.5 iPhone 14 Pro Max

Table 5-5 iPhone 14 Pro Max case testing matrix

Test	Using	Notes
Product Design (page 61)	iPhone 14 Pro Max	
MagSafe Case Magnet Array (page 172)	iPhone 14 Pro Max	Cases supporting MagSafe only.
Taptic Engine (page 63)	iPhone 14 Pro Max	
Autofocus & Optical Image Stabilization (page 65)	iPhone 14 Pro Max	
Near-Field Communication (NFC) (page 65)	iPhone 14 Pro Max	
Acoustics (page 67)	iPhone 14 Pro Max	

5.10.1.6 iPhone 14 Pro

Table 5-6 iPhone 14 Pro case testing matrix

Test	Using	Notes
Product Design (page 61)	iPhone 14 Pro	
MagSafe Case Magnet Array (page 172)	iPhone 14 Pro	Cases supporting MagSafe only.
Taptic Engine (page 63)	iPhone 14 Pro	
Autofocus & Optical Image Stabilization (page 65)	iPhone 14 Pro	
Near-Field Communication (NFC) (page 65)	iPhone 14 Pro	
Acoustics (page 67)	iPhone 14 Pro	

5.10.1.7 iPhone 14 Plus

Table 5-7 iPhone 14 Plus case testing matrix

Test	Using	Notes
Product Design (page 61)	iPhone 14 Plus	
MagSafe Case Magnet Array (page 172)	iPhone 14 Plus	Cases supporting MagSafe only.
Taptic Engine (page 63)	iPhone 14 Plus	
Autofocus & Optical Image Stabilization (page 65)	iPhone 14 Plus	
Near-Field Communication (NFC) (page 65)	iPhone 14 Plus	
Acoustics (page 67)	iPhone 14 Plus	

2024-05-13 | Copyright © 2024 Apple Inc. All Rights Reserved.

5.10.1.8 iPhone 14

Table 5-8 iPhone 14 case testing matrix

Test	Using	Notes
Product Design (page 61)	iPhone 14	
MagSafe Case Magnet Array (page 172)	iPhone 14	Cases supporting MagSafe only.
Taptic Engine (page 63)	iPhone 14	
Autofocus & Optical Image Stabilization (page 65)	iPhone 14	
Near-Field Communication (NFC) (page 65)	iPhone 14	
Acoustics (page 67)	iPhone 14	

5.10.1.9 iPhone 13 Pro Max

Table 5-9 iPhone 13 Pro Max case testing matrix

Test	Using	Notes
Product Design (page 61)	iPhone 13 Pro Max	
MagSafe Case Magnet Array (page 172)	iPhone 13 Pro Max	Cases supporting MagSafe only.
Taptic Engine (page 63)	iPhone 13 Pro Max	
Autofocus & Optical Image Stabilization (page 65)	iPhone 13 Pro Max	
Near-Field Communication (NFC) (page 65)	iPhone 13 Pro Max	
Acoustics (page 67)	iPhone 13 Pro Max	

5.10.1.10 iPhone 13 Pro

Table 5-10 iPhone 13 Pro case testing matrix

Test	Using	Notes
Product Design (page 61)	iPhone 13 Pro	
MagSafe Case Magnet Array (page 172)	iPhone 13 Pro	Cases supporting MagSafe only.
Taptic Engine (page 63)	iPhone 13 Pro	
Autofocus & Optical Image Stabilization (page 65)	iPhone 13 Pro	
Near-Field Communication (NFC) (page 65)	iPhone 13 Pro	
Acoustics (page 67)	iPhone 13 Pro	

2024-05-13 | Copyright © 2024 Apple Inc. All Rights Reserved.

5.10.1.11 iPhone 13

Table 5-11 iPhone 13 case testing matrix

Test	Using	Notes
Product Design (page 61)	iPhone 13	
MagSafe Case Magnet Array (page 172)	iPhone 13	Cases supporting MagSafe only.
Taptic Engine (page 63)	iPhone 13	
Autofocus & Optical Image Stabilization (page 65)	iPhone 13	
Near-Field Communication (NFC) (page 65)	iPhone 13	
Acoustics (page 67)	iPhone 13	

5.10.1.12 iPhone 13 mini

Table 5-12 iPhone 13 mini case testing matrix

Test	Using	Notes
Product Design (page 61)	iPhone 13 mini	
MagSafe Case Magnet Array (page 172)	iPhone 13 mini	Cases supporting MagSafe only.
Taptic Engine (page 63)	iPhone 13 mini	
Autofocus & Optical Image Stabilization (page 65)	iPhone 13 mini	
Near-Field Communication (NFC) (page 65)	iPhone 13 mini	
Acoustics (page 67)	iPhone 13 mini	

5.10.1.13 iPhone 12 Pro Max

Table 5-13 iPhone 12 Pro Max case testing matrix

Test	Using	Notes
Product Design (page 61)	iPhone 12 Pro Max	
MagSafe Case Magnet Array (page 172)	iPhone 12 Pro Max	Cases supporting MagSafe only.
Taptic Engine (page 63)	iPhone 12 Pro Max	
Autofocus & Optical Image Stabilization (page 65)	iPhone 12 Pro Max	
Near-Field Communication (NFC) (page 65)	iPhone 12 Pro Max	
Acoustics (page 67)	iPhone 12 Pro Max	

2024-05-13 | Copyright © 2024 Apple Inc. All Rights Reserved.

5.10.1.14 iPhone 12 Pro

Table 5-14 iPhone 12 Pro case testing matrix

Test	Using	Notes
Product Design (page 61)	iPhone 12 Pro	
MagSafe Case Magnet Array (page 172)	iPhone 12 Pro	Cases supporting MagSafe only.
Taptic Engine (page 63)	iPhone 12 Pro	
Autofocus & Optical Image Stabilization (page 65)	iPhone 12 Pro	
Near-Field Communication (NFC) (page 65)	iPhone 12 Pro	
Acoustics (page 67)	iPhone 12 Pro	

5.10.1.15 iPhone 12

Table 5-15 iPhone 12 case testing matrix

Test	Using	Notes
Product Design (page 61)	iPhone 12	
MagSafe Case Magnet Array (page 172)	iPhone 12	Cases supporting MagSafe only.
Taptic Engine (page 63)	iPhone 12	
Autofocus & Optical Image Stabilization (page 65)	iPhone 12	
Near-Field Communication (NFC) (page 65)	iPhone 12	
Acoustics (page 67)	iPhone 12	

5.10.1.16 iPhone 12 mini

Table 5-16 iPhone 12 mini case testing matrix

Test	Using	Notes
Product Design (page 61)	iPhone 12 mini	
MagSafe Case Magnet Array (page 172)	iPhone 12 mini	Cases supporting MagSafe only.
Taptic Engine (page 63)	iPhone 12 mini	
Autofocus & Optical Image Stabilization (page 65)	iPhone 12 mini	
Near-Field Communication (NFC) (page 65)	iPhone 12 mini	
Acoustics (page 67)	iPhone 12 mini	

2024-05-13 | Copyright © 2024 Apple Inc. All Rights Reserved.

5.10.1.17 iPhone 11 Pro Max

Table 5-17 iPhone 11 Pro Max case testing matrix

Test	Using	Notes
Product Design (page 61)	iPhone 11 Pro Max	
Taptic Engine (page 63)	iPhone 11 Pro Max	
Autofocus & Optical Image Stabilization (page 65)	iPhone 11 Pro Max	
Acoustics (page 67)	iPhone 11 Pro Max	

5.10.1.18 iPhone 11 Pro

Table 5-18 iPhone 11 Pro case testing matrix

Test	Using	Notes
Product Design (page 61)	iPhone 11 Pro	
Taptic Engine (page 63)	iPhone 11 Pro	
Autofocus & Optical Image Stabilization (page 65)	iPhone 11 Pro	
Acoustics (page 67)	iPhone 11 Pro	

5.10.1.19 iPhone 11

Table 5-19 iPhone 11 case testing matrix

Test	Using	Notes
Product Design (page 61)	iPhone 11	
Taptic Engine (page 63)	iPhone 11	
Autofocus & Optical Image Stabilization (page 65)	iPhone 11	
Acoustics (page 67)	iPhone 11	

5.10.1.20 iPhone XS Max

Table 5-20 iPhone XS Max case testing matrix

Test	Using	Notes
Product Design (page 61)	iPhone XS Max	

2024-05-13 | Copyright © 2024 Apple Inc. All Rights Reserved.

Test	Using	Notes
Taptic Engine (page 63)	iPhone XS Max	
Autofocus & Optical Image Stabilization (page 65)	iPhone XS Max	
Acoustics (page 67)	iPhone XS Max	

5.10.1.21 iPhone XS

Table 5-21 iPhone XS case testing matrix

Test	Using	Notes
Product Design (page 61)	iPhone XS	
Taptic Engine (page 63)	iPhone XS	
Autofocus & Optical Image Stabilization (page 65)	iPhone XS	
Acoustics (page 67)	iPhone XS	

5.10.1.22 iPhone XR

Table 5-22 iPhone XR case testing matrix

Test	Using	Notes
Product Design (page 61)	iPhone XR	
Taptic Engine (page 63)	iPhone XR	
Autofocus & Optical Image Stabilization (page 65)	iPhone XR	
Acoustics (page 67)	iPhone XR	

5.10.1.23 iPhone X

Table 5-23 iPhone X case testing matrix

Test	Using	Notes
Product Design (page 61)	iPhone X	
Taptic Engine (page 63)	iPhone X	
Autofocus & Optical Image Stabilization (page 65)	iPhone X	
Acoustics (page 67)	iPhone X	

2024-05-13 | Copyright © 2024 Apple Inc. All Rights Reserved.

5.10.1.24 iPhone 8 Plus/iPhone 7 Plus

Table 5-24 iPhone 8 Plus/iPhone 7 Plus case testing matrix

Test	Using	Notes
Product Design (page 61)	iPhone 8 Plus and iPhone 7 Plus	
Taptic Engine (page 63)	iPhone 8 Plus and iPhone 7 Plus	
Touch ID Sensor Overlays (page 64)	iPhone 8 Plus and iPhone 7 Plus	
Autofocus & Optical Image Stabilization (page 65)	iPhone 8 Plus	
Acoustics (page 67)	iPhone 8 Plus and iPhone 7 Plus	

It is not possible for a case to claim compatibility with only iPhone 8 Plus or only iPhone 7 Plus.

5.10.1.25 iPhone SE (3rd generation)/iPhone SE (2nd generation)/iPhone 8/iPhone 7

Table 5-25 iPhone SE (3rd generation)/iPhone SE (2nd generation)/iPhone 8/iPhone 7 case testing matrix

Test	Using	Notes
Product Design (page 61)	iPhone SE (3rd generation), iPhone SE (2nd generation), iPhone 8, and iPhone 7	
Taptic Engine (page 63)	iPhone SE (3rd generation), iPhone SE (2nd generation), iPhone 8, and iPhone 7	
Touch ID Sensor Overlays (page 64)	iPhone SE (3rd generation), iPhone SE (2nd generation), iPhone 8, and iPhone 7	
Autofocus & Optical Image Stabilization (page 65)	iPhone SE (3rd generation) and iPhone SE (2nd generation)	
Acoustics (page 67)	iPhone SE (3rd generation), iPhone SE (2nd generation), iPhone 8, and iPhone 7	

It is not possible for a case to claim compatibility with only iPhone SE (3rd generation), only iPhone SE (2nd generation), only iPhone 8, or only iPhone 7.

5.10.1.26 iPhone 6s Plus/iPhone 6 Plus

Table 5-26 iPhone 6s Plus/iPhone 6 Plus case testing matrix

Test	Using	Notes
Product Design (page 61)	iPhone 6s Plus and iPhone 6 Plus	

2024-05-13 | Copyright © 2024 Apple Inc. All Rights Reserved.

Test	Using	Notes
Autofocus & Optical Image Stabilization (page 65)	iPhone 6s Plus	
Taptic Engine (page 63)	iPhone 6s Plus	

It is not possible for a case to claim compatibility with only iPhone 6s Plus or only iPhone 6 Plus.

5.10.1.27 iPhone 6s/iPhone 6

Table 5-27 iPhone 6s/iPhone 6 case testing matrix

Test	Using	Notes
Product Design (page 61)	iPhone 6s and iPhone 6	
Taptic Engine (page 63)	iPhone 6s	

It is not possible for a case to claim compatibility with only iPhone 6s or only iPhone 6.

5.10.1.28 iPhone 5/iPhone 5s/iPhone SE

Table 5-28 iPhone 5/iPhone 5s/iPhone SE case testing matrix

Test	Using	Notes
Product Design (page 61)	iPhone SE	

It is not possible for a case to claim compatibility with only iPhone 5 or only iPhone 5s or only iPhone SE.

5.10.1.29 iPhone 5c

Table 5-29 iPhone 5c case testing matrix

Test	Using	Notes
Product Design (page 61)	iPhone 5c	
Compass (page 66)	iPhone 5c	

2024-05-13 | Copyright © 2024 Apple Inc. All Rights Reserved.

5.10.1.30 iPad Pro 13-inch (M4)

Table 5-30 iPad Pro 13-inch (M4) Case Testing Matrix

Test	Using	Notes
Product Design (page 61)	iPad Pro 13-inch (M4)	
Compass (page 66)	iPad Pro 13-inch (M4)	

5.10.1.31 iPad Pro 11-inch (M4)

Table 5-31 iPad Pro 11-inch (M4) Case Testing Matrix

Test	Using	Notes
Product Design (page 61)	iPad Pro 11-inch (M4)	
Compass (page 66)	iPad Pro 11-inch (M4)	

5.10.1.32 iPad Air 13-inch (M2)

Table 5-32 iPad Air 13-inch (M2) Case Testing Matrix

Test	Using	Notes
Product Design (page 61)	iPad Air 13-inch (M2)	
Compass (page 66)	iPad Air 13-inch (M2)	

5.10.1.33 iPad Air 11-inch (M2)

Table 5-33 iPad Air 11-inch (M2) Case Testing Matrix

Test	Using	Notes
Product Design (page 61)	iPad Air 11-inch (M2)	
Compass (page 66)	iPad Air 11-inch (M2)	

2024-05-13 | Copyright © 2024 Apple Inc. All Rights Reserved.

5.10.1.34 iPad Pro 12.9-inch (6th generation) and iPad Pro 12.9-inch (5th generation)

Table 5-34 iPad Pro 12.9-inch (6th generation) and iPad Pro 12.9-inch (5th generation) case testing matrix

Test	Using	Notes
Product Design (page 61)	iPad Pro 12.9-inch (6th generation)	
Compass (page 66)	iPad Pro 12.9-inch (6th generation)	

It is not possible for a case to claim compatibility with only iPad Pro 12.9-inch (6th generation) or only iPad Pro 12.9-inch (5th generation).

5.10.1.35 iPad Pro 11-inch (4th generation) and iPad Pro 11-inch (3rd generation)

Table 5-35 iPad Pro 11-inch (4th generation) and iPad Pro 11-inch (3rd generation) case testing matrix

Test	Using	Notes
Product Design (page 61)	iPad Pro 11-inch (4th generation)	
Compass (page 66)	iPad Pro 11-inch (4th generation)	

It is not possible for a case to claim compatibility with only iPad Pro 11-inch (4th generation) or only iPad Pro 11-inch (3rd generation).

5.10.1.36 iPad (10th generation)

Table 5-36 iPad (10th generation) case testing matrix

Test	Using	Notes
Product Design (page 61)	iPad (10th generation)	
Compass (page 66)	iPad (10th generation)	

5.10.1.37 iPad mini (6th generation)

Table 5-37 iPad mini (6th generation) case testing matrix

Test	Using	Notes
Product Design (page 61)	iPad mini (6th generation)	
Compass (page 66)	iPad mini (6th generation)	

2024-05-13 | Copyright © 2024 Apple Inc. All Rights Reserved.

5.10.1.38 iPad (7th generation)/iPad (8th generation)/iPad (9th generation)

Table 5-38 iPad (7th generation)/iPad (8th generation)/iPad (9th generation) case testing matrix

Test	Using	Notes
Product Design (page 61)	iPad (7th generation), iPad (8th generation), and iPad (9th generation)	
Compass (page 66)	iPad (7th generation), iPad (8th generation), and iPad (9th generation)	

It is not possible for a case to claim compatibility with only iPad (7th generation) or only iPad (8th generation) or only iPad (9th generation).

5.10.1.39 iPad Air (5th generation)/iPad Air (4th generation)

Table 5-39 iPad Air (5th generation)/iPad Air (4th generation) case testing matrix

Test	Using	Notes
Product Design (page 61)	iPad Air (5th generation)	
Compass (page 66)	iPad Air (5th generation)	

5.10.1.40 iPad Pro 12.9-inch (4th generation)

Table 5-40 iPad Pro 12.9-inch (4th generation) case testing matrix

Test	Using	Notes
Product Design (page 61)	iPad Pro 12.9-inch (4th generation)	
Compass (page 66)	iPad Pro 12.9-inch (4th generation)	

5.10.1.41 iPad Pro 11-inch (2nd generation)

Table 5-41 iPad Pro 11-inch (2nd generation) case testing matrix

Test	Using	Notes
Product Design (page 61)	iPad Pro 11-inch (2nd generation)	
Compass (page 66)	iPad Pro 11-inch (2nd generation)	

2024-05-13 | Copyright © 2024 Apple Inc. All Rights Reserved.

5.10.1.42 iPad Air (3rd generation)

Table 5-42 iPad Air (3rd generation) case testing matrix

Test	Using	Notes
Product Design (page 61)	iPad Air (3rd generation)	
Autofocus & Optical Image Stabilization (page 65)	iPad Air (3rd generation)	
Compass (page 66)	iPad Air (3rd generation)	

5.10.1.43 iPad mini (5th generation)

Table 5-43 iPad mini (5th generation) case testing matrix

Test	Using	Notes
Product Design (page 61)	iPad mini (5th generation)	
Compass (page 66)	iPad mini (5th generation)	

5.10.1.44 iPad Pro 12.9-inch (3rd generation)

Table 5-44 iPad Pro 12.9-inch (3rd generation) case testing matrix

Test	Using	Notes
Product Design (page 61)	iPad Pro 12.9-inch (3rd generation)	
Compass (page 66)	iPad Pro 12.9-inch (3rd generation)	

5.10.1.45 iPad Pro 11-inch (1st generation)

Table 5-45 iPad Pro 11-inch (1st generation) case testing matrix

Test	Using	Notes
Product Design (page 61)	iPad Pro 11-inch (1st generation)	
Compass (page 66)	iPad Pro 11-inch (1st generation)	

2024-05-13 | Copyright © 2024 Apple Inc. All Rights Reserved.

5.10.1.46 iPad Pro 10.5-inch

Table 5-46 iPad Pro 10.5-inch case testing matrix

Test	Using	Notes
Product Design (page 61)	iPad Pro 10.5-inch	
Autofocus & Optical Image Stabilization (page 65)	iPad Pro 10.5-inch	
Compass (page 66)	iPad Pro 10.5-inch	

5.10.1.47 iPad Pro 12.9-inch (2nd generation)

Table 5-47 iPad Pro 12.9-inch (2nd generation) case testing matrix

Test	Using	Notes
Product Design (page 61)	iPad Pro 12.9-inch (2nd generation)	
Autofocus & Optical Image Stabilization (page 65)	iPad Pro 12.9-inch (2nd generation)	
Compass (page 66)	iPad Pro 12.9-inch (2nd generation)	

5.10.1.48 iPad (5th and 6th generation)

Table 5-48 iPad (5th and 6th generation) case testing matrix

Test	Using	Notes
Product Design (page 61)	iPad (5th generation) or iPad (6th generation)	
Compass (page 66)	iPad (5th generation) or iPad (6th generation)	

5.10.1.49 iPad Pro 9.7-inch

Table 5-49 iPad Pro 9.7-inch case testing matrix

Test	Using	Notes
Product Design (page 61)	iPad Pro 9.7-inch	
Compass (page 66)	iPad Pro 9.7-inch	

2024-05-13 | Copyright © 2024 Apple Inc. All Rights Reserved.

5.10.1.50 iPad Pro 12.9-inch (1st generation)

Table 5-50 iPad Pro 12.9-inch (1st generation) case testing matrix

Test	Using	Notes
Product Design (page 61)	iPad Pro 12.9-inch (1st generation)	
Compass (page 66)	iPad Pro 12.9-inch (1st generation)	

5.10.1.51 iPad mini 4

Table 5-51 iPad mini 4 case testing matrix

Test	Using	Notes
Product Design (page 61)	iPad mini 4	
Compass (page 66)	iPad mini 4	

5.10.1.52 iPad mini/iPad mini 2/iPad mini 3

Table 5-52 iPad mini/iPad mini 2/iPad mini 3 case testing matrix

Test	Using	Notes
Product Design (page 61)	iPad mini 3	
Compass (page 66)	iPad mini 2 and iPad mini 3	

It is not possible for a case to claim compatibility with only iPad mini or only iPad mini 2 or only iPad mini 3.

5.10.1.53 iPad Air 2

Table 5-53 iPad Air 2 case testing matrix

Test	Using	Notes
Product Design (page 61)	iPad Air 2	
Compass (page 66)	iPad Air 2	

2024-05-13 | Copyright © 2024 Apple Inc. All Rights Reserved.

5.10.1.54 iPad Air

Table 5-54 iPad Air case testing matrix

Test	Using	Notes
Product Design (page 61)	iPad Air	
Compass (page 66)	iPad Air	

5.10.1.55 iPad (4th generation)

Table 5-55 iPad (4th generation) case testing matrix

Test	Using	Notes
Product Design (page 61)	iPad (4th generation)	
Compass (page 66)	iPad (4th generation)	

5.10.2 Product Design

5.10.2.1 Equipment

- Device
- Apple Lightning Digital AV Adapter for devices with a Lightning receptacle.
- Apple USB-C Digital AV Multiport Adapter for devices with a USB-C receptacle.
- EarPods with 3.5 mm Headphone Plug for devices with a 3.5 mm headset jack.
- Vernier calipers
- 0.85 mm plastic feeler gauge

5.10.2.2 Procedure

1. Insert the device into the case.
2. Verify the device completely fits inside the case.
3. Verify the device is not loose.
4. Verify all buttons are accessible.
5. Inspect for button feel. Verify all buttons are not too hard to press or take a lot of effort to press.
6. Verify speaker/microphone ports are not occluded.
7. If the device has an Apple Lightning receptacle:
   a. Insert the Apple Lightning Digital AV Adapter into the receptacle and verify it fits.

Copyright © 2024 Apple Inc. All Rights Reserved.

b. Using vernier calipers, measure the Lightning connector opening on the case. Verify the opening is measured to be at least 12.05 mm by 6.30 mm.

8. If the device has a USB-C receptacle:
   a. Insert the Apple USB-C Digital AV Multiport Adapter into the receptacle and verify it fits.
   b. Using vernier calipers, measure the USB-C connector opening on the case. Verify the opening is measured to be at least 12.35 mm by 6.50 mm.
9. If the device has a 3.5 mm headset jack:
   a. Insert EarPods with 3.5 mm Headphone Plug into the headset jack and verify it fits.
   b. Using vernier calipers, measure the headset jack opening on the case. Verify the opening is measured to be at least 6 mm in diameter and no more than 14 mm deep.
10. If the device has a Touch ID sensor integrated with the Home button, use vernier calipers to verify the case is at least 2 mm away from the Touch ID sensor.
11. If the device has a Touch ID sensor integrated with the Top button, use vernier calipers to verify the case meets the keep-out defined for each device the accessory claims compatibility with. See Device Dimensional Drawings (page 276).
12. Verify the case is always proud of the feeler gauge when the gauge is placed at each corner of the device. See Figure 5-11 (page 62).

Figure 5-11 Device proudness test

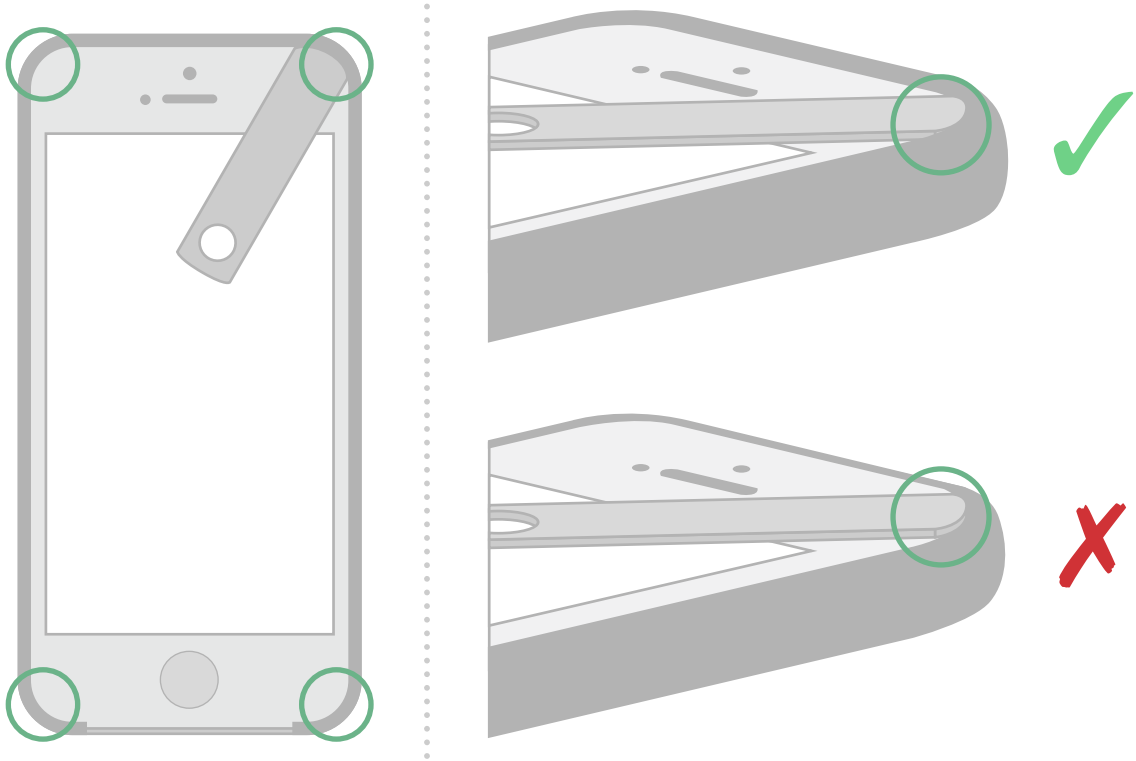

13. Set the device flat on its face (screen facing down).
14. Roll the device towards any side not enclosed by the case until the gap between the device's exposed glass and flat surface is smallest.
15. Verify the feeler gauge fits into the gap between the device's exposed glass and flat surface.

Figure 5-12 Device gap test

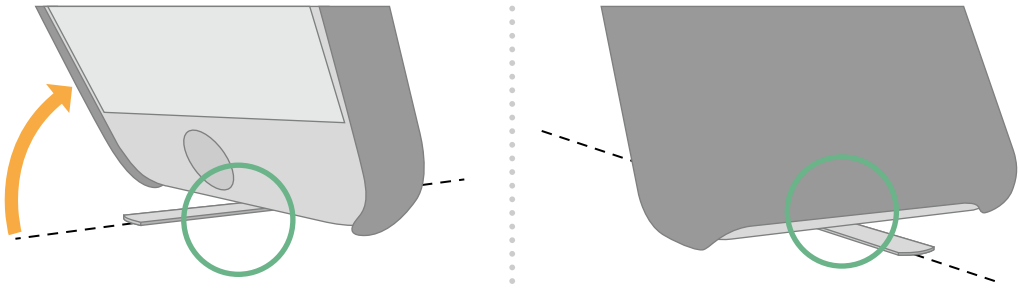

16. If the case has an overlay, verify there are no air gaps introduced between it and the touchscreen.

5.10.3 Taptic Engine

5.10.3.1 Equipment

- Two devices A and B, same model
- Table

5.10.3.2 Procedure

1. Attach the case to device B.
2. Place device A on top of the table.
3. Place device B on top of the table next to device A.
4. Open Settings > Sound & Haptics > Haptics, select Always Play.
5. Compare the Taptic Engine feedback between device A and device B for each of the following tasks:
   a. Toggle the Ring/Silent switch or use the Action button.
   b. Connect a charger, wait a few seconds, then disconnect the charger.
   c. Open Settings > Notifications > Phone > Sounds, select Reflection (Default).
   d. Open Settings > Notifications > Messages > Sounds, select Note (Default).
   e. Go to the Home Screen.
   f. Long press the Settings app to show the Quick Actions menu, then slide a finger across the menu while maintaining contact with the screen, release to select Wi-Fi.
   g. Go to the Home Screen.

2024-05-13 | Copyright © 2024 Apple Inc. All Rights Reserved.

   h. Long press the Home app to show the Quick Actions menu. Release, then tap away from the menu to return to the Home Screen.
   i. Open the Clock app, select Timers (lower right corner), then scroll through the hours, minutes, and seconds.
6. If the device has a Home button:
   a. Open Settings > General > Home Button, select option 2.
   b. Press the Home button.
7. Repeat the above tasks while holding device A in the left hand and device B in the right hand.

5.10.3.3 Pass/Fail Criteria

The case does not cause substantial change in the feel of the device's Taptic Engine.

5.10.4 Touch ID Sensor Overlays

This test procedure applies to accessories overlaying the Touch ID sensor.

5.10.4.1 Equipment

- Nitrile gloves (for example, Ansell TNT Blue)
- Ethyl alcohol hand sanitizer (for example, Purell)
- Scissors

5.10.4.2 Procedure

1. Cut off a square of material from the nitrile glove's wrist portion.
2. Install the accessory onto the device.
3. Press the Side/Top button to place the device into a sleep state (display off).
4. Place the square of nitrile glove material over the Touch ID sensor with the glove's outer side facing away from the device.
5. Apply a small amount of hand sanitizer (approximately 2 cm in diameter) to the glove over the Touch ID sensor.
6. Repeat the following steps 10 times:
   a. Press the Touch ID sensor with a thumb.
   b. Verify the device wakes (display on).
   c. Place the device into a sleep state (display off).
7. Repeat the following steps 10 times:
   a. Press the Touch ID sensor with an index finger.
   b. Verify the device wakes (display on).
   c. Place the device into a sleep state (display off).

2024-05-13 | Copyright © 2024 Apple Inc. All Rights Reserved.

5.10.4.3 Pass/Fail Criteria

Verify the device wakes every time the Touch ID sensor is pressed.

5.10.5 Camera

5.10.5.1 Autofocus & Optical Image Stabilization

This test applies to devices equipped with Autofocus (AF) and/or Optical Image Stabilization (OIS).

5.10.5.1.1 Equipment

- Device running iOS 17.5 or later or iPadOS 17.5 or later. See Device Models (page 45).
- A flat level non-ferrous test surface away from magnetic fields.
- Accessory Developer Assistant (ADA) (page 273).
- Autofocus & Optical Image Stabilization Test Profile (page 273).

5.10.5.1.2 Procedure

1. Launch the Accessory Developer Assistant app and sign in.
2. Select Case, Autofocus and Optical Image Stabilization.
3. Allow ADA to access the device camera, if prompted.
4. Set the device on the test surface.
5. Follow the on-screen instructions.
6. Select Measure Baseline and wait for the measurement to complete.
7. Attach the case being tested on the device.
8. Set the device back on the test surface.
9. Select Measure Attached and wait for the measurement to complete.
10. Verify all tests pass and note the results.

5.10.6 Near-Field Communication (NFC)

This test applies to devices equipped with NFC.

5.10.6.1 Equipment

The following equipment is necessary:

- Device running iOS 17.5 or later.
- Accessory Developer Assistant (ADA) (page 273).
- An NFC tag.
- An NFC transmitter.
  - A separate device with the ADA app may be used as an NFC transmitter.

2024-05-13 | Copyright © 2024 Apple Inc. All Rights Reserved.

- A flat level non-ferrous test surface away from magnetic fields.
- A straight edge non-metalic ruler.

5.10.6.2 Test Setup

1. Place the NFC tag or transmitter on the flat level non-ferrous test surface.
2. Position the ruler to measure the vertical distance from the NFC tag or transmitter to the device.

5.10.6.3 Procedure

This procedure establishes a detection baseline without a case attached and then tests are rerun with the case attached. The procedure is repeated for both NFC tag & transmitter modes.

1. Launch the Accessory Developer Assistant app and sign in.
2. Select Near Field Communication.
3. Select 'Test with NFC tag', and follow the on-screen instructions.
    a. Measure baseline average distance with no case attached.
    b. Attach case.
    c. Repeat measurements with case attached.
    d. Verify test passes.
4. Select 'Test with an NFC transmitter', and follow the on-screen instructions.
    a. If using a second device as an NFC transmitter:
        a. Open ADA app on the second device.
        b. Select Apple Pay Detector.
        c. Select Start Detector.
    b. Measure baseline average distance with no case attached.
    c. Attach case.
    d. Repeat measurements with case attached.
    e. Verify test passes.
5. Perform multi-angle detection.
6. Verify multi-angle detection test passes.

5.10.7 Compass

5.10.7.1 Equipment

The following equipment is necessary:

- Device running iPadOS 17.5 or later.
- Accessory Developer Assistant (ADA) (page 273).
- A flat level non-ferrous test surface away from magnetic fields.
- Magnetometer, such as the Meda FVM400.

2024-05-13 | Copyright © 2024 Apple Inc. All Rights Reserved.

5.10.7.2 Test Setup

1. Place a mark on the test surface with a 90° angle to use for repeated device alignment. For example, use two pieces of tape perpendicular to each other.
2. Use the magnetometer to verify the test surface has a consistent magnetic field, not affected by nearby electronics or magnets.

5.10.7.3 Procedure

Compass Test Procedures are outlined in this section.

1. Launch the Accessory Developer Assistant app and sign in.
2. Select Compass and the case type, such as: Folio, Keyboard Folio, or Shell.
3. Scroll down and select all supported case configurations, see Figure 5-13 (page 67).

Figure 5-13 Case configurations

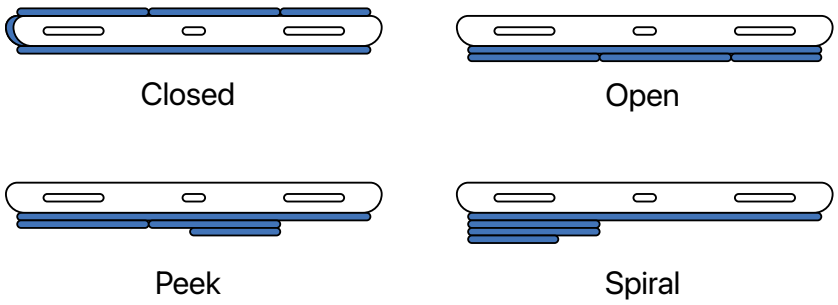

4. Scroll down and select all included case materials.
5. Select Start Test.
6. If a closed case configuration is selected, connect an external display and mouse when prompted.
7. Place the device with no case attached on the test surface, aligned to the mark.
8. Select Measure Baseline to collect an initial measurement.
9. Once the measurement is complete, follow the on-screen instructions to attach the case and collect a measurement for each supported case configuration.
10. Verify all tests pass and note the results.

5.10.8 Acoustics

The following test procedures apply to devices with a built in speaker and/or microphone.

5.10.8.1 Speakerphone Call

This procedure evaluates the impact of a case on the speakerphone performance of a device.

2024-05-13 | Copyright © 2024 Apple Inc. All Rights Reserved.

5.10.8.1.1 Equipment and Test Setup

This procedure needs two operators in separate quiet rooms.

Room A:

- Operator A.
- The device used to evaluate the case with cellular service and at least two out of five bars of cellular reception within the room.

Room B:

- Operator B.
- Landline speakerphone.
- Digital audio recorder (for example, a device with the Voice Memo app).

5.10.8.1.2 Pass/Fail Criteria

There are two categories of failure for this procedure:

- Echo: If Operator B hears their own voice from the landline.
- Double talk: If Operator B hears Operator A inconsistently.

Establish the pass/fail threshold for these two categories by performing the test procedure using the device (without the case) as a reference. If there is no perceivable difference between the reference and the same procedure conducted with the case on the device, the test passes.

5.10.8.1.3 Procedure

1. Operator A: Use the device (without a case) in Room A to call the landline phone in Room B.
2. Operator A: Place the device in speakerphone mode.
3. Operator B: Answer the call with the landline phone in Room B.
4. Operator B: Place the landline phone in speakerphone mode.
5. Operator A and B: Simultaneously recite the following phrases to evaluate the call quality:
   a. The birch canoe slid on the smooth planks.
   b. Glue the sheet to the dark blue background.
   c. It's easy to tell the depth of a well.
   d. These days a chicken leg is a rare dish.
   e. Rice is often served in round bowls.
   f. The juice of lemons makes fine punch.
   g. The box was thrown beside the parked truck.
   h. The hogs were fed chopped corn and garbage.
   i. Four hours of steady work faced us.
   j. Large size in stockings is hard to sell.
6. Operator B: Evaluate the call. Ensure the call is audible and clear when there is no case on the device.

2024-05-13 | Copyright © 2024 Apple Inc. All Rights Reserved.

7. Operator A: Place the case on the device.
8. Operator B: Start audio recording using a digital audio recorder.
9. Operator A: State the test date and identify the manufacturer name, product name, and a unique identifier (UID) for case (production run name, design version, etc.).
10. Operator A and B: Simultaneously recite the same phrases as above.
11. Operator B: Stop audio recording.
12. Operator B: Evaluate the recording against the Pass/Fail Criteria (page 68).

The phrases used for this test procedure are from "IEEE Recommended Practice for Speech Quality Measurements," in *IEEE Transactions on Audio and Electroacoustics*, vol. 17, no. 3, pp. 225-246, September 1969.

2024-05-13 | Copyright © 2024 Apple Inc. All Rights Reserved.

6. Covers

This chapter is applicable to accessories covering device displays.

6.1 Device Protection

Covers shall not damage coatings on the display in any operating condition (for example, when closed, carrying in a backpack, or storing).

6.2 Magnetic Interference

Accessory covers shall not interfere with the device's:

- Magnetic compass.
- Rear camera autofocus (AF).
- Rear camera optical image stabilization (OIS), if present.
- Front camera autofocus, if present.

See Magnetic Interference (page 27) for additional details.

6.3 Smart Covers

Dimensional drawings indicating magnet and Hall effect sensor locations are available for the following devices:

- iPad Pro 13-inch (M4) 3 of 5 (page 344)
- iPad Pro 11-inch (M4) 3 of 5 (page 349)
- iPad Air 13-inch (M2) 3 of 5 (page 354)
- iPad Air 11-inch (M2) 3 of 5 (page 359)
- iPad Pro 12.9-inch (6th generation) 3 of 5 (page 364)
- iPad Pro 11-inch (4th generation) 3 of 5 (page 369)
- iPad (10th generation) 4 of 6 (page 375)
- iPad Air (5th generation) and iPad Air (4th generation) 3 of 5 (page 380)
- iPad mini (6th generation) 3 of 6 (page 385)
- iPad mini (6th generation) 4 of 6 (page 386)

2024-05-13 | Copyright © 2024 Apple Inc. All Rights Reserved.

- iPad (9th generation), iPad (8th generation) and iPad (7th generation) 2 of 4 (page 390)
- iPad Pro 12.9-inch (5th generation) 3 of 5 (page 395)
- iPad Pro 11-inch (3rd generation) 3 of 5 (page 400)
- iPad Pro 12.9-inch (4th generation) 3 of 5 (page 405)
- iPad Pro 11-inch (2nd generation) 3 of 5 (page 410)
- iPad Air (3rd generation) with Wi-Fi 2 of 3 (page 414)
- iPad Air (3rd generation) with Wi-Fi + Cellular 2 of 3 (page 417)
- iPad mini (5th generation) with Wi-Fi 2 of 3 (page 420)
- iPad mini (5th generation) with Wi-Fi + Cellular 2 of 3 (page 423)
- iPad Pro 12.9-inch (3rd generation) 2 of 3 (page 426)
- iPad Pro 11-inch (1st generation) 2 of 3 (page 429)
- iPad Pro 12.9-inch (2nd generation) Magnet/Hall Effect Sensors 1 of 2 (page 433)
- iPad Pro 12.9-inch (2nd generation) Magnet/Hall Effect Sensors 2 of 2 (page 434)
- iPad Pro 10.5-inch Magnet/Hall Effect Sensors 1 of 2 (page 437)
- iPad Pro 10.5-inch Magnet/Hall Effect Sensors 2 of 2 (page 438)
- iPad (5th and 6th generation) Magnet/Hall Effect Sensors 1 of 2 (page 440)
- iPad (5th and 6th generation) Magnet/Hall Effect Sensors 2 of 2 (page 441)
- iPad Pro 9.7-inch Magnet/Hall Effect Sensors 1 of 2 (page 444)
- iPad Pro 9.7-inch Magnet/Hall Effect Sensors 2 of 2 (page 445)
- iPad Pro 12.9-inch (1st generation) Magnet/Hall Effect Sensors 1 of 2 (page 448)
- iPad Pro 12.9-inch (1st generation) Magnet/Hall Effect Sensors 2 of 2 (page 449)
- iPad mini 4 Magnet/Hall Effect Sensors (page 452)

2024-05-13 | Copyright © 2024 Apple Inc. All Rights Reserved.

7. Screen Overlays

The displays on Apple products have been carefully engineered and tested to deliver exacting visual performance. Many products also feature Multi-Touch technology to support user interactions. Any material overlaying the screen or between the surface and users' fingers (or writing instruments on iPad) may impact the visual, touch, or sensor performance.

7.1 Product Design

A screen overlay shall not:

- Degrade the performance of Multi-Touch, Apple Pencil, or sensors.
- Introduce air gaps between the touchscreen and overlay.
- Be electrically conductive.
- Cause any color tinge to cool white light sources.

A screen overlay should have a relative permittivity (dielectric) of 3.1 to 3.2.

A screen overlay should not:

- Exceed 0.3 mm in thickness.
- Exceed 0.095 mm in thickness to support Apple Pencil.
- Have a water contact angle <110°.

> **Note:**
> Non-glossy surfaces may accelerate Apple Pencil tip wear.

7.1.1 Optical Transmission

Optical transmission of screen overlays should:

- Be greater than 90% relative to clear glass for any viewing angle across the active display area, see Device Dimensional Drawings (page 276).
- Remain flat as defined in Figure 7-1 (page 73). Upon normalizing the transmission spectrum to the value at 550 nm, the normalized spectrum should fall in the range of [0.99, 1.01] from 500-800 nm and [0.95, 1.01] from 400-500 nm.

2024-05-13 | Copyright © 2024 Apple Inc. All Rights Reserved.

Figure 7-1 Transmission spectrum

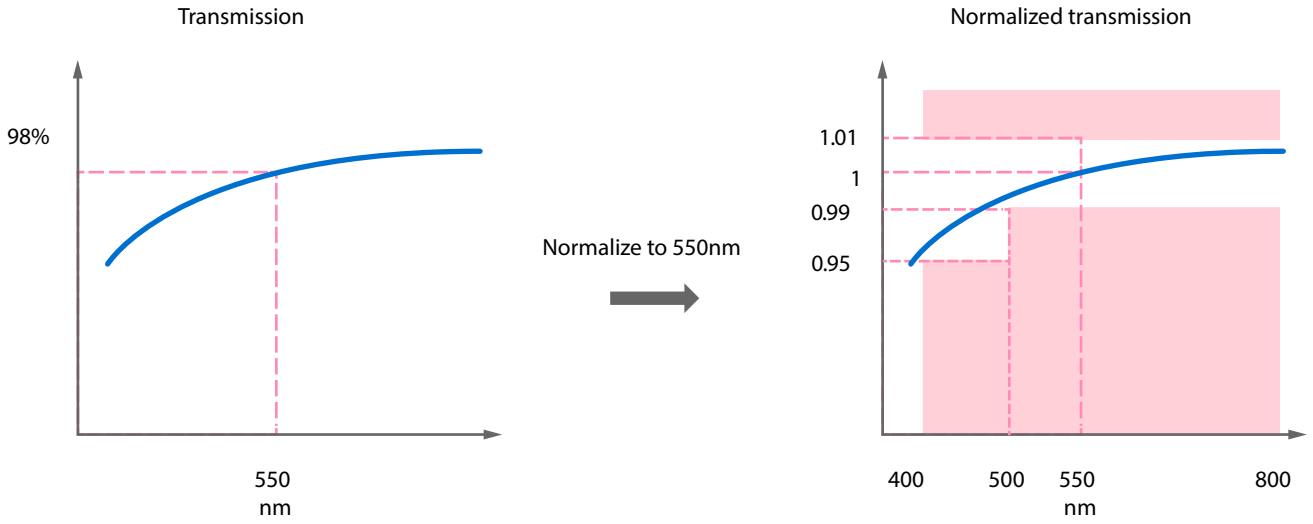

7.1.2 Infrared Transmission

Infrared transmission variance shall not exceed 1.5%. The infrared transmission in the 1200 nm - 1500 nm range relative to light source should be greater than:

- 90% for an angle of incidence between 0° and 45°.
- 84% for an angle of incidence between 45° and 60°.

7.1.3 Transmission Haze

Transmission haze is the percentage of visible and infrared light scattered at more than 2.5° from the normal transmission. Transmission haze should:

- Not exceed 0.3% for the following devices:
  - iPhone 15 Pro Max
  - iPhone 15 Pro
  - iPhone 15 Plus
  - iPhone 15
  - iPhone 14 Pro Max
  - iPhone 14 Pro
- Not exceed 13% for all other devices.
- Be measured with a haze meter, per ASTM D1003.

7.1.4 Dynamic Island

Screen overlays shall not have a punch-out for the Dynamic Island.

2024-05-13 | Copyright © 2024 Apple Inc. All Rights Reserved.

7.2 Edge Swipe Gestures

See Edge Swipe Gestures (page 35).

2024-05-13 | Copyright © 2024 Apple Inc. All Rights Reserved.

8. Camera Attachments

This chapter is applicable to accessories intentionally altering images captured by device cameras.

8.1 Magnetic Interference

Accessory camera attachments shall not interfere with the device's:

- Magnetic compass.
- Rear camera autofocus (AF).
- Rear camera optical image stabilization (OIS), if present.
- Front camera autofocus, if present.

See Magnetic Interference (page 27) for additional details.

2024-05-13 | Copyright © 2024 Apple Inc. All Rights Reserved.

9. Adapters

An adapter accessory is a dongle or a Built-In Cable (page 23) enabling connections between physically incompatible devices and accessories.

Unless otherwise specified, accessories may integrate one or more adapter components as well as other accessory features to create more advanced multi-port adapters. For example, a Lightning or USB-C adapter may support audio, power, external storage, media controls, app communication, and more.

See the Accessory Interface Specification (page 24) for more information.

9.1 Headset Adapters (Lightning to 3.5 mm)

Lightning to 3.5 mm headset adapters are accessories enabling 3.5 mm audio connections.

See the Accessory Interface Specification (page 24) for more information.

9.2 USB-A/USB-C to Lightning Headset Adapters

USB-A to Lightning or USB-C to Lightning headset adapters are accessories integrating a Lightning Receptacle (C37) to support Lightning headsets, speakers, and microphones.

See the Accessory Interface Specification (page 24) for more information.

9.3 Lightning to USB Micro-B Adapters

Figure9-1 Lightning to USB Micro-B adapter

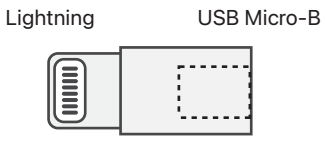

2024-05-13 | Copyright © 2024 Apple Inc. All Rights Reserved.

Lightning to USB Micro-B adapters are Lightning dongle accessories functioning exactly like the Apple Lightning to USB Micro-B Adapter and shall consist of:

- Lightning connector.
- USB Micro-B receptacle.

See the Accessory Interface Specification (page 24) for more information.

2024-05-13 | Copyright © 2024 Apple Inc. All Rights Reserved.

10. AC Power Adapters

AC power adapters convert AC "mains" power to DC to provide power to a device. They may provide power using one or more of the following:

- USB-C Receptacle (page 267) combined with a USB-C cable or USB-C to Lightning cable.
- USB-A Receptacle (page 262) combined with a USB-A to Lightning cable.
- Device Power (Inductive) (page 145).

10.1 Converter Switching Frequencies

Device touchscreen or audio functionality may be degraded if converter switching frequencies do not meet the following requirements:

- Under loads greater than 5 mA, converter switching frequencies shall be above 22 kHz.
- Under loads greater than 20 mA, converter switching frequencies shall be above 60 kHz and should be above 450 kHz.

10.2 YCAP AC Capacitor

AC power adapters should include a YCAP AC capacitor (up to 1000 pF) between the primary and secondary sections of the adapter's transformer to reduce common-mode noise at switching frequencies. These frequencies or their harmonics can interfere with device touchscreen sensors.

10.3 Impedance Stability

AC power adapter series impedance should not change abruptly. Sudden changes in impedance may cause touchscreen sensor output oscillations.

Bridge diodes used in full-wave bridge rectifiers can be a major source of abrupt changes in the series impedance. If the bridge diodes have large inherent reverse capacitance (greater than 100 pF), then the net impedance change due to diode switching may be acceptably small. However, diode reverse capacitance may decrease in more compact IC designs due to decreased chip area.

2024-05-13 | Copyright © 2024 Apple Inc. All Rights Reserved.

Impedance of bridge diodes with unacceptably low reverse capacitance can be stabilized using the example circuit shown in Figure 10-1 (page 79) and Table 10-1 (page 79). In this example, capacitors C1, C2, C3, and C4 have been placed in parallel with diodes D1, D2, D3, and D4 to stabilize the bridge impedance. Their values are larger than the inherent reverse capacitances of the diodes.

Resistors R1, R2, R3, and R4 are optional; if included, they can block noise at very high frequencies, which can help with EMI compatibility. The recommended values of R1, R2, R3, and R4 in Table 10-1 (page 79) were chosen to have trivial levels of impedance relative to the impedances of C1, C2, C3, and C4 at power line frequencies.

Figure 10-1 Typical AC power adapter diode bridge circuit

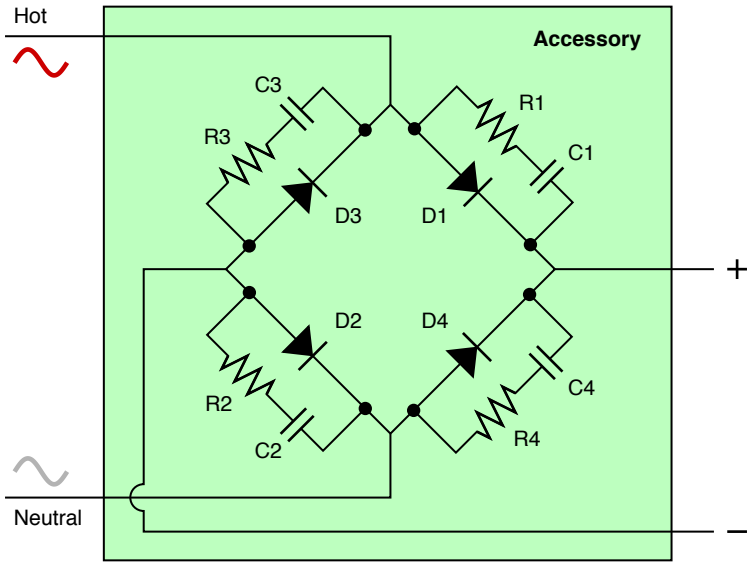

Table 10-1 Typical component values for an AC power adapter diode bridge circuit

Component	Value
C1, C2, C3, C4	47 pF
R1, R2, R3, R4	2 kΩ

10.4 Fuse Protection

A fuse should be present at the input of the AC power adapter to protect it under any fault condition.

Copyright © 2024 Apple Inc. All Rights Reserved.

10.5 Short Circuit Response

The output of the AC power adapter should drop or fold back without any resulting damage if its output is shorted to the secondary common (less than 10 mΩ).

Copyright © 2024 Apple Inc. All Rights Reserved.

11. Battery Packs

A battery pack is an accessory designed to provide power to the device.

The battery pack may provide power using one or more of the following:

- Inductive power transmitter, see Device Power (Inductive) (page 145).
- Integrated Lightning connector, see Device Power (Lightning) (page 140).
- USB-C Receptacle (page 267) combined with a USB-C cable or USB-C to Lightning cable.
- USB-A Receptacle (page 262) combined with a USB-A to Lightning cable.

2024-05-13 | Copyright © 2024 Apple Inc. All Rights Reserved.

12. Headsets

Headsets provide users with personal audio experiences. Devices treat headsets differently from accessories with speakers.

Headsets shall comply with:

- TDMA Noise (page 27) requirements.
- Applicable volume limit regulations in the regions in which they are sold.

Wired headsets should support Apple Music Lossless or Hi-Res Lossless. See https://support.apple.com/en-us/118295.

12.1 Product Design

Headsets shall have:

- Drivers positioned at user's ears.
- Microphone(s) positioned to record user's voice.

12.2 Audio Interface

Headsets shall establish audio connections to devices using one of the following interfaces:

- USB-C Plug (page 263), including the Apple USB-C Analog Headset Module (page 235).
- Bluetooth (page 215):
  - Hands-Free Profile (HFP) (page 219)
  - Advanced Audio Distribution Profile (A2DP) (page 224)

If connected using the USB-C Plug (page 263), headsets shall integrate one of the following:

- Apple USB-C Analog Headset Module (page 235) (recommended for standard headsets).
- USB Audio Device Class 2.0 or 4.0 compliant codec.

12.3 Remote Controls

Controls shall be implemented using one of the following:

- Direct electrical connections to the Headset Remote and Microphone Transmitter (page 244) when integrating an Apple USB-C Analog Headset Module (page 235).
- HID Headset Remote (page 151) when using one of the following:
  - USB-C Plug (page 263) with a USB Audio Device Class 2.0 or 4.0 compliant codec.
  - Bluetooth (page 215).
- Bluetooth Audio/Video Remote Control Profile (AVRCP) (page 222).

Bluetooth headsets should implement controls identical to an Apple wired headset.

12.4 USB-C Headset Identification

This section applies to headsets integrating a USB-C connector.

Headsets shall:

- Set the idVendor, idProduct, iManufacturer, iProduct, and iSerialNumber in the Standard Device Descriptor to reflect the accessory markings and packaging.
- Set the Output Terminal Type to `0x0302` (Headphones) if the headset does not integrate a microphone.
- Set the Output Terminal Type and Input Terminal Type to `0x0402` (Headset) if the headset integrates a microphone.
- Set the Audio Function Category to `0x04` (Headset).

Headsets should:

- Set the iInterface Playback and iInterface Record strings to reflect the accessory markings and packaging.
- Set a unique iSerialNumber in the Standard Device Descriptor.

> **Note:**
> C125 has its Output Terminal Type and Input Terminal Type set to `0x0402` (Headset) and Audio Function Category set to `0x04` (Headset). These configurations cannot be overwritten.

Copyright © 2024 Apple Inc. All Rights Reserved.

13. Strobes

Strobe accessories replace a device's integrated flash when capturing a still image from either the front or rear-facing cameras. Photographers can use such accessories to control scene lighting for creative purposes.

Strobes are:

- Compatible with all iOS camera applications.
- Synchronized with iPhone camera using the Lightning connector.

Figure 13-1 Example of integrated flash (top) vs. external strobe (bottom)

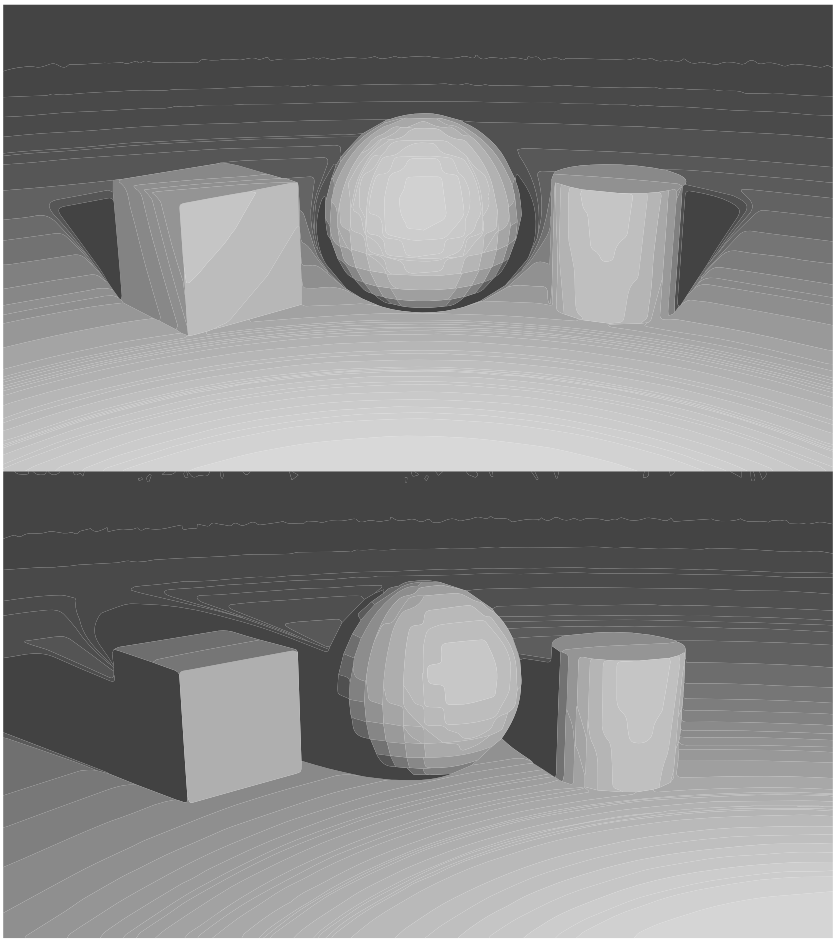

2024-05-13 | Copyright © 2024 Apple Inc. All Rights Reserved.

The following devices support strobe accessories:

- iPhone 14 Pro Max
- iPhone 14 Pro
- iPhone 14 Plus
- iPhone 14
- iPhone SE (3rd generation)
- iPhone 13 Pro Max
- iPhone 13 Pro
- iPhone 13
- iPhone 13 mini
- iPhone 12 Pro Max
- iPhone 12 Pro
- iPhone 12
- iPhone 12 mini
- iPhone SE (2nd generation)
- iPhone 11 Pro Max
- iPhone 11 Pro
- iPhone 11

This feature is supported on iOS 14.0 or later.

See the Accessory Interface Specification (page 24) for more information.

2024-05-13 | Copyright © 2024 Apple Inc. All Rights Reserved.

14. Keyboards

Devices may accept user input from accessory keyboards in place of the onscreen keyboard.

14.1 Requirements

Accessory keyboards shall:

- Support the Human Interface Device (HID) (page 211) protocol.
- Not identify themselves as Apple-branded accessories, for example, using the Apple Vendor ID and/or Product IDs.

Keyboard keys exhibiting any of the following behaviors are explicitly prohibited:

- Send anything other than 'key pressed' or 'key released' for key(s) physically pressed/released.
- Emulate combinations or sequences of keys (for example, a Copy button sending ⌘-C or macros generating a timed sequence of events).
- Emulate timed user actions, such as 'press-and-hold'.
- Send different HID usages depending on the state of another control surface.

HID reports sent from the keyboard shall only occur in response to a Direct User Action (page 23).

Keyboards may integrate LEDs to indicate the:

- Caps Lock status of the device.
- Connection status, such as Bluetooth state.
- Battery status of the accessory, if applicable.

Keyboards shall not incorporate any other status LEDs not supported by devices.

Keyboards should be integrated with Trackpads (page 92) when possible to provide an enhanced user experience.

Mechanical key layout shall be based on the ISO/IEC 9995-2, ANSI-INCITS 154-1988, or JIS X 6002-1980 standards. Keyboard HID descriptors shall set the Keyboard Physical Layout usage to the appropriate layout code as defined in Table 14-5 (page 90).

Keyboard HID descriptors shall set the bCountryCode field to the appropriate country code as defined in *Device Class Definition for Human Interface Devices (HID) Version 1.11, section 6.2.1 HID Descriptor*.

2024-05-13 | Copyright © 2024 Apple Inc. All Rights Reserved.

Keyboard HID descriptors shall declare support for the HID Keyboard/Keypad Page. HID report descriptors may declare a input usage minimum of 0 and maximum of 255 as shown in Example HID Report Descriptor (page 91) for efficiency. Otherwise, the descriptor shall individually enumerate each HID Keyboard/Keypad page usage the keyboard is capable of sending.

Keyboards shall implement individual keys emitting the following HID Keyboard/Keypad page usages:

Table 14-1 Required HID Keyboard/Keypad Page (`0x07`) controls for use by keyboards

Usage ID	Usage Name	Apple Function
`0x0004`	a and A	a and A
`0x0005`	b and B	b and B
`0x0006`	c and C	c and C
`0x0007`	d and D	d and D
`0x0008`	e and E	e and E
`0x0009`	f and F	f and F
`0x000A`	g and G	g and G
`0x000B`	h and H	h and H
`0x000C`	i and I	i and I
`0x000D`	j and J	j and J
`0x000E`	k and K	k and K
`0x000F`	l and L	l and L
`0x0010`	m and M	m and M
`0x0011`	n and N	n and N
`0x0012`	o and O	o and O
`0x0013`	p and P	p and P
`0x0014`	q and Q	q and Q
`0x0015`	r and R	r and R
`0x0016`	s and S	s and S
`0x0017`	t and T	t and T
`0x0018`	u and U	u and U
`0x0019`	v and V	v and V
`0x001A`	w and W	w and W
`0x001B`	x and X	x and X
`0x001C`	y and Y	y and Y
`0x001D`	z and Z	z and Z
`0x001E`	1 and !	1 and !
`0x001F`	2 and @	2 and @
`0x0020`	3 and #	3 and #

2024-05-13 | Copyright © 2024 Apple Inc. All Rights Reserved.

Usage ID	Usage Name	Apple Function
0x0021	4 and $	4 and $
0x0022	5 and %	5 and %
0x0023	6 and ^	6 and ^
0x0024	7 and &	7 and &
0x0025	8 and *	8 and *
0x0026	9 and (	9 and (
0x0027	0 and)	0 and)
0x0028	Return/Enter	Return
0x002A	Delete/Backspace	Delete
0x002B	Tab	Tab
0x002C	Spacebar	Spacebar
0x002D	- and _	- and _
0x002E	= and +	= and +
0x002F	[and {	[and {
0x0030	] and }	] and }
0x0031	\ and |	\ and |
0x0033	; and :	; and :
0x0034	' and "	' and "
0x0035	Grave Accent and Tilde	` and ~
0x0036	, and <	, and <
0x0037	. and >	. and >
0x0038	/ and ?	/ and ?
0x0039	CapsLock	Caps Lock
0x004F	RightArrow	Right Arrow
0x0050	LeftArrow	Left Arrow
0x0051	DownArrow	Down Arrow
0x0052	UpArrow	Up Arrow
0x00E1	LeftShift	Left Shift
0x00E2	LeftAlt	Left Option / Alt
0x00E3	LeftGUI	Left Command / ⌘
0x00E5	RightShift	Right Shift
0x00E6	RightAlt	Right Option / Alt
0x00E7	RightGUI	Right Command / ⌘

Keyboards may implement individual keys emitting the following HID Keyboard/Keypad page usages:

2024-05-13 | Copyright © 2024 Apple Inc. All Rights Reserved.

Table 14-2 Optional HID Keyboard/Keypad Page (0x07) controls for use by keyboards

Usage ID	Usage Name	Apple Function
0x0029	Escape	Escape
0x00E0	LeftControl	Left Control
0x00E4	RightControl	Right Control
0x004A	Home	Home
0x004D	End	End
0x0054	Keypad /	Keypad /
0x0055	Keypad *	Keypad *
0x0056	Keypad -	Keypad -
0x0057	Keypad +	Keypad +
0x0058	Keypad Enter	Keypad Enter
0x0059	Keypad 1 and End	Keypad 1
0x005A	Keypad 2 and Down Arrow	Keypad 2
0x005B	Keypad 3 and PageDn	Keypad 3
0x005C	Keypad 4 and Left Arrow	Keypad 4
0x005D	Keypad 5	Keypad 5
0x005E	Keypad 6 and Right Arrow	Keypad 6
0x005F	Keypad 7 and Home	Keypad 7
0x0060	Keypad 8 and Up Arrow	Keypad 8
0x0061	Keypad 9 and PageUp	Keypad 9
0x0062	Keypad 0 and Insert	Keypad 0
0x0063	Keypad . and Delete	Keypad .
0x0067	Keypad =	Keypad =

Keyboards may implement individual keys emitting the following HID Consumer page usages:

Table 14-3 HID Consumer Page (0x0C) controls for use by keyboards

Usage ID	Usage Name	Apple Function
0x0030	Power	Lock
0x0040	Menu	Home Button
0x006F	Display Brightness Increment	Brighter
0x0070	Display Brightness Decrement	Dimmer
0x00B5	Scan Next Track	Transport Right
0x00B6	Scan Previous Track	Transport Left
0x00CD	Play/Pause	Play/Pause

2024-05-13 | Copyright © 2024 Apple Inc. All Rights Reserved.

Usage ID	Usage Name	Apple Function
0x00E2	Mute	Mute
0x00E9	Volume Increment	Louder
0x00EA	Volume Decrement	Softer
0x01AE	AL Keyboard Layout	Toggle Onscreen Keyboard
0x029D	AC Keyboard Layout Select	Globe Key
0x0221	AC Search	Spotlight
0x025B	Promote	Play More Like This
0x025C	Demote	Play Less Like This
0x0262	Add to Cart	Add to Wish List
0x02C3	Keyboard Physical Layout	Keyboard Physical Layout, see Table 14-5 (page 90).

Keyboards may implement individual keys emitting the following HID Generic Desktop page usages:

Table 14-4 HID Generic Desktop Page (0x01) controls for use by keyboards

Usage ID	Usage Name	Apple Function
0x009B	System Do Not Disturb	Toggle Focus Mode

Table 14-5 Keyboard Physical Layout Codes

Value	Description
1	101 (for example, US) - ANSI
3	102 (for example, German) - ISO
5	106 (DOS/V Japan) - JIS

JIS keyboards shall also implement additional keys found on the Japanese Apple Magic Keyboard. Non-JIS keyboards shall not implement the Japanese keys.

Table 14-6 Required HID Keyboard/Keypad Page (0x07) controls for use by JIS keyboards

Usage ID	Usage Name	Apple Function
0x0087	Keyboard International1	_
0x0089	Keyboard International3	¥
0x0090	LANG1	Switch to Previous Language
0x0091	LANG2	Switch to Next Language

2024-05-13 | Copyright © 2024 Apple Inc. All Rights Reserved.

14.2 Examples

14.2.1 Example HID Report Descriptor

```
USAGE PAGE (Generic Desktop)              05 01
USAGE (Keyboard)                          09 06
COLLECTION (Application)                  A1 01
  USAGE PAGE (LEDs)                       05 08
  LOGICAL MINIMUM (0)                     15 00
  LOGICAL MAXIMUM (1)                     25 01
  USAGE (Caps Lock)                       09 02
  REPORT SIZE (1)                         75 01
  REPORT COUNT (1)                        95 01
  OUTPUT (Data,Var,Abs)                   91 02
  REPORT SIZE (7)                         75 07
  REPORT COUNT (1)                        95 01
  OUTPUT (Cnst,Var,Abs)                   91 03
  USAGE PAGE (Keyboard)                   05 07
  USAGE MINIMUM (Keyboard Left Control)   19 E0
  USAGE MAXIMUM (Keyboard Right GUI)      29 E7
  REPORT SIZE (1)                         75 01
  REPORT COUNT (8)                        95 08
  INPUT (Data,Var,Abs)                    81 02
  LOGICAL MINIMUM (0)                     15 00
  LOGICAL MAXIMUM (255)                   26 FF 00
  USAGE MINIMUM (0)                       19 00
  USAGE MAXIMUM (255)                     2A FF 00
  REPORT SIZE (8)                         75 08
  REPORT COUNT (5)                        95 05
  INPUT (Data,Ary,Abs)                    81 00
  USAGE PAGE (Consumer Devices)           05 0C
  LOGICAL MINIMUM (0)                     15 00
  LOGICAL MAXIMUM (1)                     25 01
  USAGE (Menu)                            09 40
  USAGE (AC Search)                       0A 21 02
  USAGE (AL Keyboard Layout)              0A AE 01
  USAGE (Scan Previous Track)             09 B6
  USAGE (Play/Pause)                      09 CD
  USAGE (Scan Next Track)                 09 B5
  USAGE (Mute)                            09 E2
  USAGE (Volume Down)                     09 EA
  USAGE (Volume Up)                       09 E9
  USAGE (Power)                           09 30
  REPORT SIZE (1)                         75 01
  REPORT COUNT (10)                       95 0A
  INPUT (Data,Var,Abs)                    81 02
  REPORT SIZE (6)                         75 06
  REPORT COUNT (1)                        95 01
  INPUT (Cnst,Var,Abs)                    81 03
END COLLECTION                            C0
```

2024-05-13 | Copyright © 2024 Apple Inc. All Rights Reserved.

15. Trackpads

Devices may accept user input from accessory trackpads.

This feature is supported on iPadOS 14.5 or later.

15.1 Requirements

Accessory trackpads shall:

- Support the Human Interface Device (HID) (page 211) protocol.
- Not identify themselves as Apple-branded accessories, for example, using the Apple Vendor ID (VID).

Accessory trackpads exhibiting any of the following behaviors are explicitly prohibited:

- Emulate combinations of touch gestures.
- Emulate timed user actions, such as 'click and hold', drag, and zoom gestures.
- Send different HID usages depending on the state of another control surface.

HID reports sent from the accessory trackpad shall only occur in response to a Direct User Action (page 23).

Trackpads shall support 2-5 simultaneous contacts on the digitizer surface.

15.1.1 Integration with Keyboards

Accessory trackpads shall be integrated with Keyboards (page 86) and simultaneously support both input methods. The following are examples of interactions involving both keyboard and trackpad input:

- Rapidly transitioning between cursor movement and keyboard entry.
- Pressing and holding modifier keys while performing a drag.
- Pressing ⌘-Tab to see the app switcher, then using the cursor to switch apps.
- Dragging an item using the trackpad, followed by pressing ⌘-Tab to switch apps.

15.1.2 HID Report Descriptor

HID report descriptors for an accessory trackpad shall declare support for the HID Digitizer Page.

Accessory trackpads shall implement the following HID Digitizer page usages:

2024-05-13 | Copyright © 2024 Apple Inc. All Rights Reserved.

Table 15-1 Required HID Digitizer Page (0x0D) controls for use by accessory trackpads

Usage ID	Usage Name	Apple Function
0x01	Button 1	Primary button state
0x05	Report ID	Feature Report ID
0x22	Finger	Number of contact collection points
0x30	X	X coordinate of contact position
0x31	Y	Y coordinate of contact position
0x38 or 0x51	Transducer Index or Contact ID	Index (from 0-4) uniquely identifying the finger/contact
0x42	Tip Switch	Contact is on the surface of the digitizer
0x47	Confidence	Touch is an intended, valid contact
0x57	Surface Switch	Digitizer surface on/off

Accessory trackpads may implement the following HID Digitizer page usages. These HID usages are recommended:

Table 15-2 Recommended HID Digitizer Page (0x0D) controls for use by accessory trackpads

Usage ID	Usage Name	Apple Function
0x02	Button 2	Secondary button state
0x56	Scan Time	Relative scan time
0xA1	Report Rate	Report rate (Hz)

15.1.3 Coexistence

Accessory trackpads shall:

- Not degrade the performance of Multi-Touch or Apple Pencil.
- Not support a drive voltage greater than 6 V_{pp}.
- Not support drive frequencies less than 500 kHz.
- Support 3 or more drive frequencies, separated by at least 50 kHz each.
- Dynamically switch between drive frequencies whenever effective resolution drops below 120 DPI. For example, effective resolution may drop in the presence of 50 mV RMS noise from external power sources.

Accessory trackpads should support a sine wave narrow band drive frequency.

15.1.4 Performance

Accessory trackpads shall:

2024-05-13 | Copyright © 2024 Apple Inc. All Rights Reserved.

- Behave uniformly across the digitizer surface.
- Uniquely detect contact points as close as 8 mm center to center.
- Detect contact sizes of at least 5 mm.
- Differentiate between multi-finger taps and single-finger drags.
- Maintain an effective input resolution less than 20 µm and immediately report positional updates greater than or equal to the effective input resolution.
- Maintain an effective resolution more than 600 DPI.
- Maintain the highest possible report rate to the device. Apple recommends 60 Hz or higher.
- Maintain a panning latency less than or equal to 23 ms.
- Maintain a touch down latency less than or equal to 35 ms.
- Maintain a positional accuracy less than or equal to 500 µm.
- Maintain a stationary contact jitter less than or equal to 210 µm.
- Not deviate more than 250 µm from an ideal line.

15.1.5 Input Confidence

Accessory trackpads shall:

- Set the Confidence usage when an input transitions from valid to invalid. Contact transitions should be quick, accurate, and stable to achieve the best user experience. Incorrect or fluctuating classification of contacts may result in recognition of unintended gestures, interruption, or cancelation of intended gestures.
- Detect and reject unintended/invalid inputs, such as palms, while continuing to report valid inputs to the device, such as multiple contacts.
- Distinguish between a valid large thumb and an invalid lightly resting palm.
- Reject inputs ≥1 mm from the tracking surface.

15.1.6 Click to Wake

Devices use Report ID usage to indicate to the trackpad whether surface contacts shall be reported or not. Devices will use the Surface Switch usage to tell the accessory to go into Click to Wake mode where only button clicks are accepted. Trackpads may use this opportunity to go into a low power mode where the digitizer surface does not have to be constantly scanned.

This feature report also doubles as an informational report. Devices may query the accessory trackpad at any time after enumeration to obtain the current state of the Surface Switch, and also to get the accessory's Report Rate.

2024-05-13 | Copyright © 2024 Apple Inc. All Rights Reserved.

15.2 Examples

15.2.1 Example HID Report Descriptor

The following descriptor is for a 92.10 mm x 50.60 mm trackpad with two buttons supporting up to five simultaneous contacts.

Additional modifications may be necessary in order to implement this HID report descriptor in the accessory trackpad firmware, specifically:

- Modify physical maximum values for X (`0x30`) and Y (`0x31`) positions of each finger to match the physical size of the accessory trackpad. Units are in tenths of a mm (0.1 mm). In the example, X goes from `0x0` to `0x0399` (92.10 mm) and Y goes from `0x0` to `0x01FA` (50.60 mm).
- Modify logical maximum values for the X (`0x30`) and Y (`0x31`) of each finger positions to match the resolution of the accessory trackpad. In the example, X (`0x30`) goes from 0 to `0x0451` (for a resolution of 92.10/1105 = ~0.083 mm) and Y (`0x31`) goes from 0 to `0x025F` (for the same resolution of 50.60/607 = ~0.083 mm).

```
USAGE PAGE (Digitizer Device Page)                  05 0D
USAGE (Touch Pad)                                   09 05
COLLECTION (Application)                            A1 01
  REPORT_ID (3)                                     85 03
  LOGICAL MAXIMUM (65535)                           27 FF FF 00 00
  USAGE (Relative Scan Time (DV=Dynamic Value))     09 56
  REPORT SIZE (16)                                  75 10
  REPORT COUNT (1)                                  95 01
  INPUT (Data,Var,Abs)                              81 02
  LOGICAL MAXIMUM (1)                               25 01
  REPORT SIZE (1)                                   75 01
  USAGE (Surface Switch)                            09 57
  FEATURE (Data,Var,Abs)                            B1 02
  LOGICAL MAXIMUM (32767)                           26 FF 7F
  REPORT SIZE (15)                                  75 0F
  USAGE (Report Rate)                               09 A1
  FEATURE (Data,Var,Abs)                            B1 02
  USAGE PAGE (Button Page)                          05 09
  LOGICAL MAXIMUM (1)                               25 01
  USAGE MINIMUM (Button 1)                          19 01
  USAGE MAXIMUM (Button 2)                          29 02
  REPORT COUNT (2)                                  95 02
  REPORT SIZE (1)                                   75 01
  INPUT (Data,Var,Abs)                              81 02
  REPORT COUNT (6)                                  95 06
  INPUT (Cost, Ary, Abs)                            81 01
  USAGE PAGE (Digitizer Device Page)                05 0D
  USAGE (Finger)                                    09 22
  COLLECTION (Physical)                             A1 00
  USAGE (Tip Switch)                                09 42
  USAGE (Confidence)                                09 47
```

2024-05-13 | Copyright © 2024 Apple Inc. All Rights Reserved.

```
REPORT COUNT (2)                                95 02
INPUT (Data,Var,Abs)                            81 02
LOGICAL MAXIMUM (5)                             25 05
USAGE (Transducer Index)                        09 38
REPORT SIZE (6)                                 75 06
REPORT COUNT (1)                                95 01
INPUT (Data,Var,Abs)                            81 02
USAGE PAGE (Generic Desktop Page)               05 01
PHYSICAL MAXIMUM (921)                          46 99 03
PHYSICAL MINIMUM (0)                            35 00
LOGICAL MAXIMUM (1105)                          26 51 04
REPORT SIZE (12)                                75 0C
UNIT EXPONENT (Unit Value x .01)                55 0E
GLOBAL UNIT (Distance in centimeters)           65 11
USAGE (X)                                       09 30
INPUT (Data,Var,Abs)                            81 02
PHYSICAL MAXIMUM (506)                          46 FA 01
LOGICAL MAXIMUM (607)                           26 5F 02
USAGE (Y)                                       09 31
INPUT (Data,Var,Abs)                            81 02
END COLLECTION (Physical)                       C0
USAGE PAGE (Digitizer Device Page)              05 0D
USAGE (Finger)                                  09 22
COLLECTION (PHYSICAL)                           A1 00
LOGICAL MAXIMUM (1)                             25 01
USAGE (Tip Switch)                              09 42
USAGE (Confidence)                              09 47
REPORT SIZE (1)                                 75 01
REPORT COUNT (2)                                95 02
INPUT (Data,Var,Abs)                            81 02
USAGE (Transducer Index)                        09 38
LOGICAL MAXIMUM (5)                             25 05
REPORT SIZE (6)                                 75 06
REPORT COUNT (1)                                95 01
INPUT (Data,Var,Abs)                            81 02
USAGE PAGE (Generic Desktop Page)               05 01
PHYSICAL MAXIMUM (921)                          46 99 03
LOGICAL MAXIMUM (1105)                          26 51 04
REPORT SIZE (12)                                75 0C
USAGE (X)                                       09 30
INPUT (Data,Var,Abs)                            81 02
PHYSICAL MAXIMUM (506)                          46 FA 01
LOGICAL MAXIMUM (607)                           26 5F 02
USAGE (Y)                                       09 31
INPUT (Data,Var,Abs)                            81 02
END COLLECTION (Physical)                       C0
USAGE PAGE (Digitizer Device Page)              05 0D
USAGE (Finger)                                  09 22
COLLECTION (Physical)                           A1 00
LOGICAL MAXIMUM (1)                             25 01
USAGE (Tip Switch)                              09 42
USAGE (Confidence)                              09 47
REPORT SIZE (1)                                 75 01
```

Copyright © 2024 Apple Inc. All Rights Reserved.

```
REPORT COUNT (2)                        95 02
INPUT (Data,Var,Abs)                    81 02
USAGE (Transducer Index)                09 38
LOGICAL MAXIMUM (5)                     25 05
REPORT SIZE (6)                         75 06
REPORT COUNT (1)                        95 01
INPUT (Data,Var,Abs)                    81 02
USAGE PAGE (Generic Desktop Page)       05 01
PHYSICAL MAXIMUM (921)                  46 99 03
LOGICAL MAXIMUM (1105)                  26 51 04
REPORT SIZE (12)                        75 0C
USAGE (X)                               09 30
INPUT (Data,Var,Abs)                    81 02
PHYSICAL MAXIMUM (506)                  46 FA 01
LOGICAL MAXIMUM (607)                   26 5F 02
USAGE (Y)                               09 31
INPUT (Data,Var,Abs)                    81 02
END COLLECTION (PHYSICAL)               C0
USAGE PAGE (Digitizer Device Page)      05 0D
USAGE (Finger)                          09 22
COLLECTION (PHYSICAL)                   A1 00
LOGICAL MAXIMUM (1)                     25 01
USAGE (Tip Switch)                      09 42
USAGE (Confidence)                      09 47
REPORT SIZE (1)                         75 01
REPORT COUNT (2)                        95 02
INPUT (Data,Var,Abs)                    81 02
USAGE (Transducer Index)                09 38
LOGICAL MAXIMUM (5)                     25 05
REPORT SIZE (6)                         75 06
REPORT COUNT (1)                        95 01
INPUT (Data,Var,Abs)                    81 02
USAGE PAGE (Generic Desktop Page)       05 01
PHYSICAL MAXIMUM (921)                  46 99 03
LOGICAL MAXIMUM (1105)                  26 51 04
REPORT SIZE (12)                        75 0C
USAGE (X)                               09 30
INPUT (Data,Var,Abs)                    81 02
PHYSICAL MAXIMUM (506)                  46 FA 01
LOGICAL MAXIMUM (607)                   26 5F 02
USAGE (Y)                               09 31
INPUT (Data,Var,Abs)                    81 02
END COLLECTION (Physical)               C0
USAGE PAGE (Digitizer Device Page)      05 0D
USAGE (Finger)                          09 22
COLLECTION (PHYSICAL)                   A1 00
LOGICAL MAXIMUM (1)                     25 01
USAGE (Tip Switch)                      09 42
USAGE (Confidence)                      09 47
REPORT SIZE (1)                         75 01
REPORT COUNT (2)                        95 02
INPUT (Data,Var,Abs)                    81 02
USAGE (Transducer Index)                09 38
```

2024-05-13 | Copyright © 2024 Apple Inc. All Rights Reserved.

```
  LOGICAL MAXIMUM (5)                          25 05
  REPORT SIZE (6)                              75 06
  REPORT COUNT (1)                             95 01
  INPUT (Data,Var,Abs)                         81 02
  USAGE PAGE (Generic Desktop Page)            05 01
  PHYSICAL MAXIMUM (921)                       46 99 03
  LOGICAL MAXIMUM (1105)                       26 51 04
  REPORT SIZE (12)                             75 0C
  USAGE (X)                                    09 30
  INPUT (Data,Var,Abs)                         81 02
  PHYSICAL MAXIMUM (506)                       46 FA 01
  LOGICAL MAXIMUM (607)                        26 5F 02
  USAGE (Y)                                    09 31
  INPUT (Data,Var,Abs)                         81 02
  END COLLECTION (Physical)                    C0
END COLLECTION (Application)                   C0
```

15.2.2 Example Trackpad

The following HID reports are for a 60 Hz accessory trackpad using the Example HID Report Descriptor (page 95):

1. Two contacts are made on the surface of the accessory trackpad.
   `03000000 0300100F 0700C016 00000000 00000000 00000000`

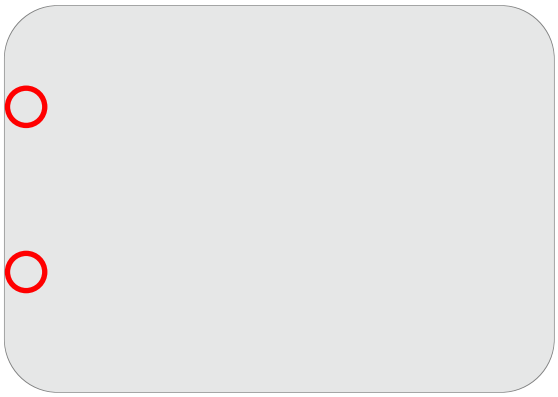

2. Two contacts move simultaneously along the X axis.
   `03A70000 0314110F 0714C116 00000000 00000000 00000000`

2024-05-13 | Copyright © 2024 Apple Inc. All Rights Reserved.

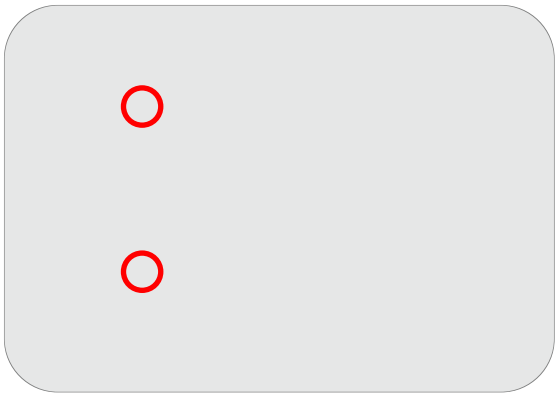

3. Two contacts continue moving until they reach the center of the digitizer surface.
`034E0100 0328120F 0728C216 00000000 00000000 00000000`

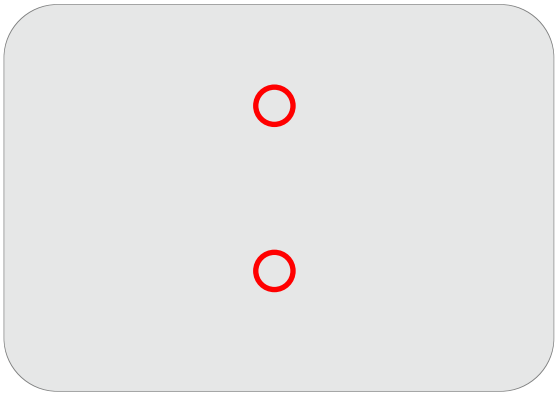

4. One contact is removed. Confidence for removed contact is still 1 and its coordinates are unchanged.
`03F50100 0328120F 0628C216 00000000 00000000 00000000`

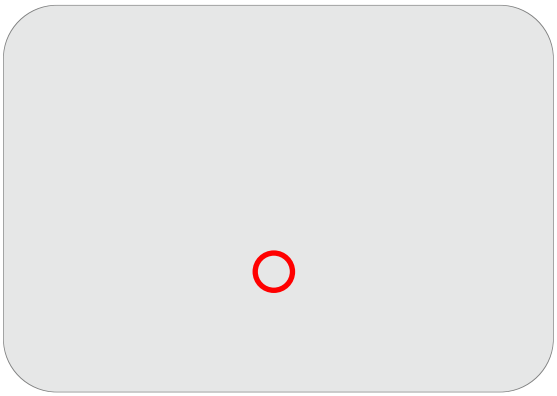

5. Remaining contact moves to the exact center of the digitizer surface. Confidence and coordinates of the removed contact are now 0.
`039C0200 0328F212 00000000 00000000 00000000 00000000`

2024-05-13 | Copyright © 2024 Apple Inc. All Rights Reserved.

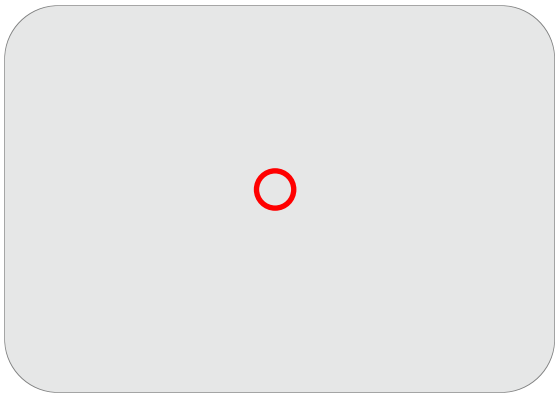

6. Button 1 is clicked.
   `03430301 0328F212 00000000 00000000 000000000 0000000`

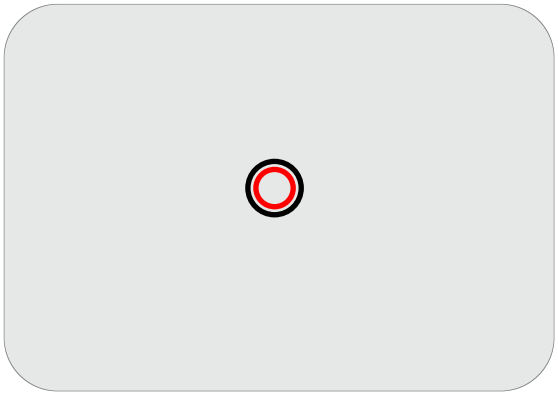

7. Button 1 is un-clicked and contact is removed. Confidence for removed contact is still 1 and its coordinates are unchanged.
   `03EA0300 0228F212 00000000 00000000 00000000 00000000`

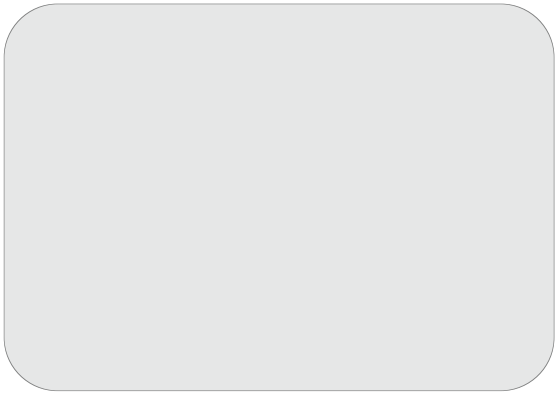

2024-05-13 | Copyright © 2024 Apple Inc. All Rights Reserved.

16. External Storage

Devices support external storage, such as USB drives and SD card readers, to:

- Store and access files.
- Import and export photos.
- Record video.

16.1 Requirements

Accessories may support moving data to or from a device using the following:

- *USB Mass Storage Class Specification Overview, Version 1.4*, see https://www.usb.org/document-library/mass-storage-class-specification-overview-14.
- External Accessory Protocol (page 150).

16.2 ProRes 4K up to 60 fps

To support ProRes capture up to 60 fps at 4K to external USB storage, the accessory shall:

- Sustain a write speed of at least 220 MB/s.
- Maintain the write speed until the USB storage is at capacity.
- Not exceed 900 mA of current draw at any point in time. See Accessory Power (USB-C) (page 127).

2024-05-13 | Copyright © 2024 Apple Inc. All Rights Reserved.

17. AirPods Accessories

Accessories shall not interfere with AirPods operation. Keep-out regions may be found in the device dimensional drawings, see:

- AirPods Pro (2nd generation) (page 515).
- AirPods (3rd generation) (page 517).
- AirPods Pro (1st generation) (page 519).
- AirPods (1st generation) and AirPods (2nd generation) (page 521).

17.1 Charging Case Covers

Charging case covers shall:

- Not interfere with AirPods charging case operation.
- Have a uniform thickness across the metal keep-out region.
- Not exceed 2.5 mm in thickness. Apple recommends 1.0 mm for maximum compatibility with inductive transmitters.

Keep-out regions may be found in the device dimensional drawings, see:

- MagSafe Charging Case (USB-C) for AirPods Pro (2nd generation) 1 of 3 (page 509).
- MagSafe Charging Case for AirPods Pro (2nd generation) 1 of 3 (page 512).
- MagSafe Charging Case for AirPods (3rd generation) (page 516).
- Wireless Charging Case for AirPods Pro (1st generation) (page 518).
- Wireless Charging Case for AirPods (page 520).

Case covers claiming compatibility with Apple Watch chargers shall not obstruct the Apple Watch charger keep-out region, see:

- MagSafe Charging Case (USB-C) for AirPods Pro (2nd generation) 2 of 3 (page 510).
- MagSafe Charging Case for AirPods Pro (2nd generation) 2 of 3 (page 513).

17.2 Chargers

Charging accessories shall be physically compatible with all charging cases.

Charging accessories with integrated:

2024-05-13 | Copyright © 2024 Apple Inc. All Rights Reserved.

- Lightning connectors shall meet the requirements for iPhone in Device Power (Lightning) (page 140).
- Inductive transmitters shall meet the requirements in Device Power (Inductive) (page 145).

17.3 Test Procedures

Test procedures for AirPods accessories.

17.3.1 Power

Power test procedures for AirPods charging case covers.

17.3.1.1 Equipment

Equipment necessary to perform the power test procedure:

- AirPods.
- AirPods charging case.
- AirPods charging case cover.
- Apple MagSafe Charger.
- Device running iOS 17.5 or later.

17.3.1.2 Test Environment and Setup

1. Insert AirPods into charging case.
2. Unlock the device and open the charging case lid.
3. Pair AirPods with the device, if necessary.
4. Using the device, verify the state of charge for:
   a. Charging case is less than 80%.
   b. AirPods is less than 50%.
5. Close the charging case lid.
6. Verify the MagSafe charger is plugged into a functional power source.
7. Place the charging case onto the MagSafe charger on a flat surface.
8. Verify the charging case LED turns on momentarily.
9. Monitor the charging case LED for 30 seconds and verify the LED turns off.
10. Tap the charging case and verify the LED turns on momentarily.

17.3.1.3 MagSafe Charging

1. Attach the accessory to the AirPods charging case.
2. Place the charging case and attached accessory onto a MagSafe charger on a flat surface.

2024-05-13 | Copyright © 2024 Apple Inc. All Rights Reserved.

3. Verify the charging case LED turns on momentarily.
4. Monitor the charging case LED for 30 seconds and verify the LED turns off.
5. Tap the charging case and verify the LED turns on momentarily.

2024-05-13 | Copyright © 2024 Apple Inc. All Rights Reserved.

18. Apple Vision Pro Accessories

Accessories shall not interfere with Apple Vision Pro operation. Keep-out regions may be found in the device dimensional drawings, see:

- Apple Vision Pro 1 of 6 (page 497)
- Apple Vision Pro 2 of 6 (page 498)
- Apple Vision Pro 3 of 6 (page 499)
- Apple Vision Pro 4 of 6 (page 500)
- Apple Vision Pro 5 of 6 (page 501)
- Apple Vision Pro 6 of 6 (page 502)
- Apple Vision Pro Battery (page 503)
- Apple Vision Pro Audio Strap (page 504)
- ZEISS Optical Inserts 1 of 4 (page 505)
- ZEISS Optical Inserts 2 of 4 (page 506)
- ZEISS Optical Inserts 3 of 4 (page 507)
- ZEISS Optical Inserts 4 of 4 (page 508)

18.1 Apple Vision Pro Storage Cases

Storage cases shall:

- Not interfere with the click or rotation function of the top button, digital crown, and fit dial.
- Not apply force on the top button, digital crown, and fit dial.
- Minimize contact with all glass surfaces, including the display and optics. When necessary, use a soft non-abrasive material.
- Maintain a power cable bend radius of at least 13 mm at the Apple Vision Pro Battery.

18.2 Apple Vision Pro Battery Holders

Battery holders should maintain at least 25% surface exposure for heat dissipation, see Apple Vision Pro Battery (page 503).

2024-05-13 | Copyright © 2024 Apple Inc. All Rights Reserved.

18.3 Apple Vision Pro Bands

Bands attaching to the Apple Vision Pro Audio Strap connector shall:

- Be designed to prevent hair snag between the connector and mating parts, particularly in small spaces and between hard materials.
- Not detach with a peel force less than 100 N at 12 mm from the connector.
- Have a maximum insertion force of 18.3 N.
- Not have metal contact with the elastomer portion of Apple Vision Pro Audio Strap.
- Not have a material hardness exceeding 320 HV for portions contacting the Apple Vision Pro Audio Strap connector.
- Have a maximum normal pull force of 300 N on the Apple Vision Pro Audio Strap connector.

18.4 Test Procedures

Test procedures for Apple Vision Pro accessories.

18.4.1 Equipment

The following equipment is necessary to perform the tests in this procedure:

- Apple Vision Pro Audio Strap.
- Digital force gauge, such as the Chatillon DFX II.
- Hook attachment for digital force gauge.
- Clamps, or a vice, to securely hold the Apple Vision Pro Audio Strap on a flat level surface.

18.4.2 Peel Force Test

Peel force test procedure for Apple Vision Pro Bands.

1. Clamp the Apple Vision Pro Audio Strap as close to the connector as possible.
2. Apply ramping force to the band at 12 mm from the connector until 100 N of force is reached, see Figure 18-1 (page 107).
3. Verify the band is still attached to the Apple Vision Pro Audio Strap. Material failure on the band is allowed.

2024-05-13 | Copyright © 2024 Apple Inc. All Rights Reserved.

Figure 18-1 Peel force test setup

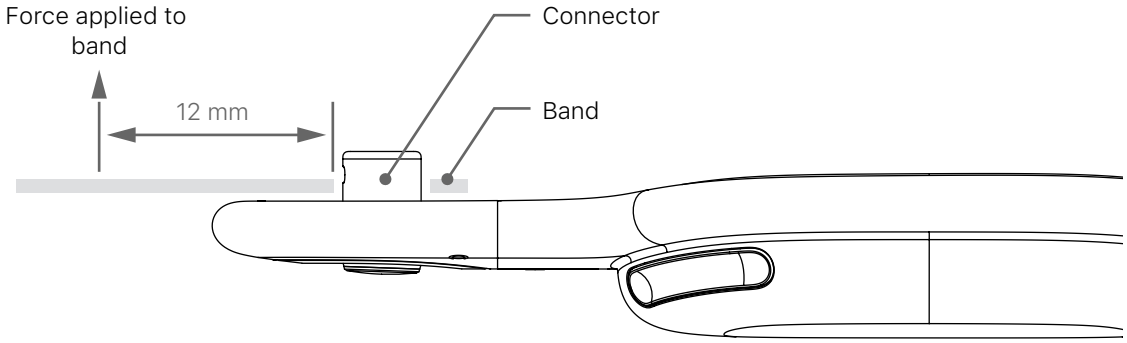

2024-05-13 | Copyright © 2024 Apple Inc. All Rights Reserved.

19. Watch Bands

A well-designed watch band will securely attach to Apple Watch without interfering with Apple Watch operation. See Device Dimensional Drawings (page 276) for Apple Watch keep-out zones.

19.1 Requirements

Watch bands for Apple Watch shall integrate two lugs to mate with the Apple Watch Band Interface (page 110). Apple Watch uses a high precision interface profile, see https://developer.apple.com/accessories/apple-watch-lug-profile.zip for a sample 2D lug profile. Lugs should lock into the watch band mating slot with a 'lug latch' feature to prevent accidental removal of the watch band.

Exposed edges of watch bands and lugs shall pass UL 1439 tests for sharpness of edges on equipment and BS EN 71-1:2014, *Safety of Toys - Mechanical and physical properties*.

The lug latch shall never become jammed in the extended position.

Watch bands shall not integrate magnetic chargers.

Watch bands and lugs should:

- Pass a 72 hour salt mist test as specified in ASTM B117 with no visible corrosion.
- Resist a 5-20 kgf lateral slide-out force when installed in Apple Watch.
- Resist a 20 kgf or greater pull force as specified in ISO-6245:1996, *Specifications for Diver's Watches*, section 7.3.
- Detach easily from Apple Watch when the watch band release buttons are pressed.
- Take into account the weight of Apple Watch.

Watch bands shall enable the user to maintain direct skin contact with Apple Watch heart sensors and the back of Apple Watch, and shall incorporate sufficient margin to compensate for shifting or dimensional changes of the watch band material. Failure to do so may interfere with Apple Watch wrist detect and Apple Pay features. Watch bands should:

- Have length sizing adjustment pitch of less than 7 mm (center to center).
- Provide sufficient adjustability for the user to achieve a snug, yet comfortable fit preventing movement of Apple Watch relative to the wearer's skin.

Watch bands intended for use during exercise should maintain a snug fit through a full range of motion to maintain compatibility with Apple Watch heart sensors.

2024-05-13 | Copyright © 2024 Apple Inc. All Rights Reserved.

Apple recommends the following materials for lug bodies:

- 75 Shore A silicone.
- 50-55% glass-filled nylon.
- 240-270HV 316L / EN 1.4435 stainless steel.

Apple recommends the following materials for lug latches:

- 50-55% glass-filled nylon.
- 240-270HV 316L / EN 1.4435 stainless steel.

Watch bands for Apple Watch shall comply with applicable environmental regulations for the regions in which the watch bands are to be sold, and any applicable substance or material restrictions, including applicable restrictions on:

- Organic tin compounds, PFOS, PFOA, phthalates, azo dyes, polybrominated biphenyls (PBBs) and PAHs, per requirements of the EU REACh regulation EC 1907/2006.
- Nickel leach rate on surfaces in prolonged skin contact, per requirements of the EU REACh regulation EC 1907/2006.
- Cadmium, lead, hexavalent chromium, and nickel, per requirements of EU Directive 2009/48/EC.
- Natural rubber latex, per requirements of EU Directive EC 93/42/EEC.
- Dimethylfumarate (DMFu), per requirements of EU Regulation 412/2012.
- pH and Formaldehyde, per requirements of China GB 18401 for textiles and China GB 20400 for leather.
- Endangered species of flora and fauna in products or packaging (US Lacey Act).
- Polybrominated diphenyl ethers (PBDE).

2024-05-13 | Copyright © 2024 Apple Inc. All Rights Reserved.

19.2 Apple Watch Band Interface

NOTES:

1. EXPOSED EDGES MUST CONFORM TO UL 1439: TESTS FOR SHARPNESS OF EDGES ON EQUIPMENT AND BS EN71-1: SAFETY OF TOYS.
2. EDGES MUST BE FREE FROM BURRS/FLASH
3. SEE LUG PROFILE CAD ON APPLE DEVELOPER WEBSITE

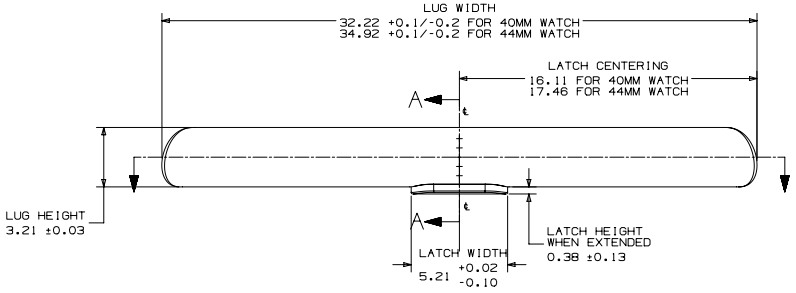

LATCH EXTENDED

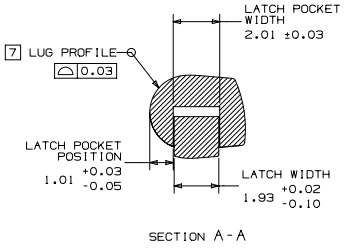

SECTION A-A

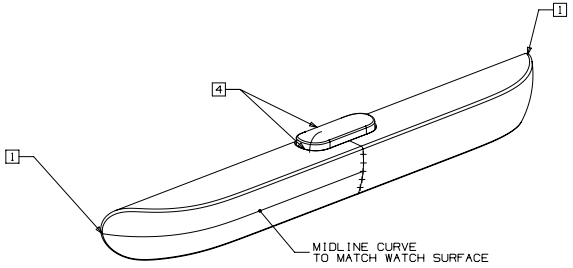

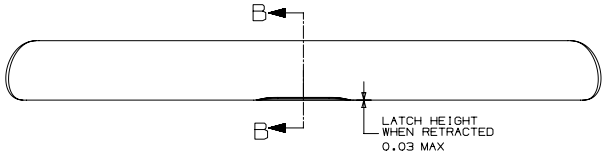

LATCH RETRACTED

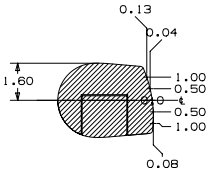

SECTION B-B

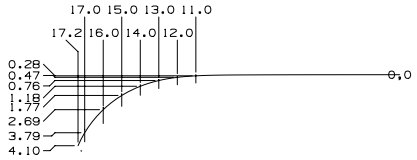

CURVE AT LUG MIDLINE, 44MM WATCH

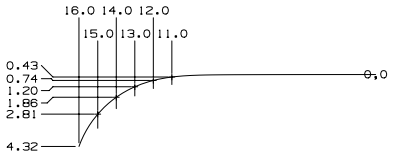

CURVE AT LUG MIDLINE, 40MM WATCH

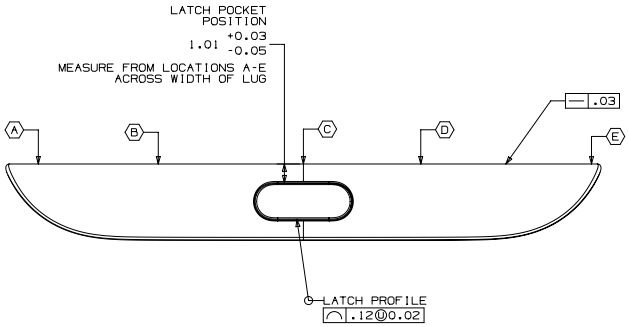

REV	ECO#	DESCRIPTION OF REVISION

METRIC	Apple Inc.
DRAFTER: APPLE INC. — DATE: 09/21/18	NOTICE OF PROPRIETARY PROPERTY: THE INFORMATION CONTAINED HEREIN IS THE PROPRIETARY PROPERTY OF APPLE INC. THE POSSESSOR AGREES TO THE FOLLOWING: (i) TO MAINTAIN THIS DOCUMENT IN CONFIDENCE (ii) NOT TO COPY OR REPRODUCE IT (iii) NOT TO REVEAL OR PUBLISH IT IN WHOLE OR PART (iv) ALL RIGHTS RESERVED
DESIGNER: APPLE INC. — DATE: 09/21/18	
DIMENSIONS ARE IN MILLIMETERS TOLERANCES	TITLE: APPLE WATCH BAND INTERFACE
DO NOT SCALE DRAWINGS	DRAWING NUMBER — REV. 01
THIRD ANGLE PROJECTION — SIZE D	SCALE NONE — SHT 1 OF 1

NX GENERATED

19.3 Example Apple Watch Lug Assembly

Assembly instructions are based on Example Apple Watch Lug (page 113) and an assembly fixture with a clamping mechanism.

Proper assembly of the lug is critical to ensure the watch band securely attaches to Apple Watch. Improper assembly may result in damage to Apple Watch and/or the watch band.

Screw threads should be secured with Loctite 435. Previously installed/used screws should not be reused.

The assembly fixture should hold the lug assembly in place and a clamping mechanism should compress the lug during screw insertion.

Assemble the watch band and lug as follows, see Figure 19-1 (page 112).

1. Lightly insert the long end of the female pin in the watch band until hard stop. Ensure there is no warping or damage in the watch band.
2. Lightly insert the long end of the male pin in the other side of the band until it interlocks with the female pin and both pins are seated together. Ensure there is no warping or damage in the watch band.
3. Align the holes on the bottom of the lug with the exposed ends of the female and male pins. Note lug latch top/bottom orientation relative to the watch band. Latch shall be on the side of the watch band against the wrist.
4. Apply Loctite 435 to screw threads.
5. Install both screws using the following specification:
   - Torque: 1.1 kgf-cm ±10%
   - RPM: 120 ±10%
6. Visually inspect at 1200-1400 lux for screw proudness and cross-threading.
7. Ensure screws are just sub-flush to the lowest part of the counterbore and appear parallel to the long axis of the lug.
8. Ensure screws are undamaged, flat, and concentric with the counterbore.

2024-05-13 | Copyright © 2024 Apple Inc. All Rights Reserved.

Figure 19-1 Apple Watch lug assembly fixture

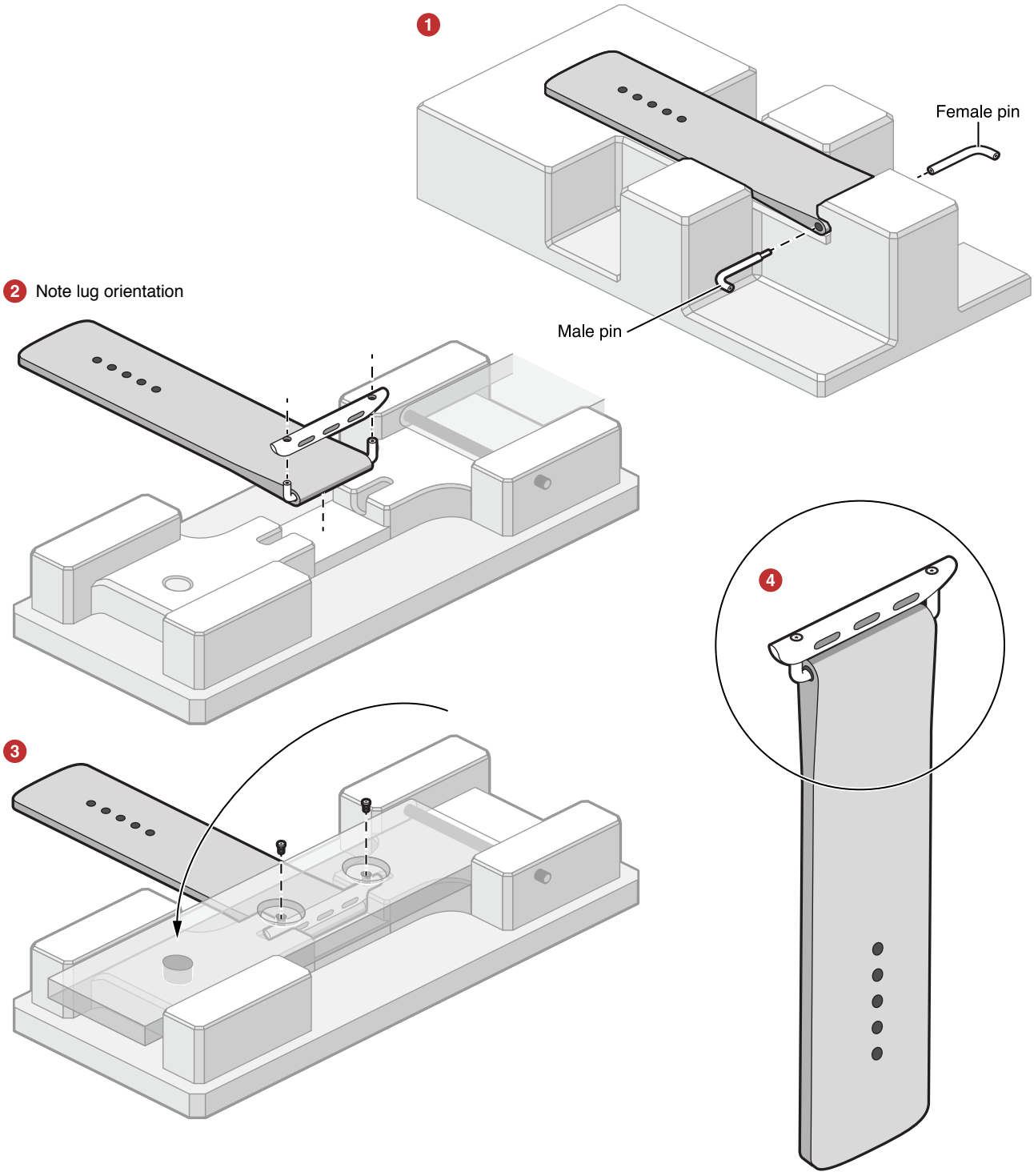

2024-05-13 | Copyright © 2024 Apple Inc. All Rights Reserved.

19.4 Example Apple Watch Lug

REV	ECO#	DESCRIPTION OF REVISION

NOTES: (UNLESS OTHERWISE SPECIFIED)

1. EXPOSED EDGES MUST CONFORM TO UL 1439: TESTS FOR SHARPNESS OF EDGES ON EQUIPMENT AND BS EN71-1: SAFETY OF TOYS.

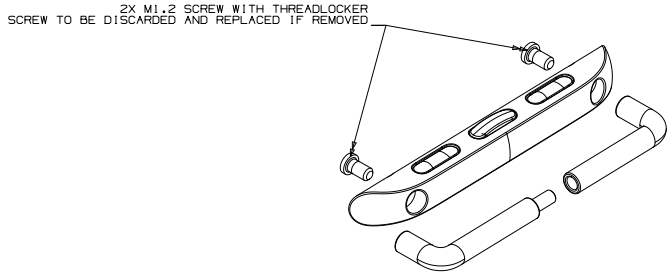

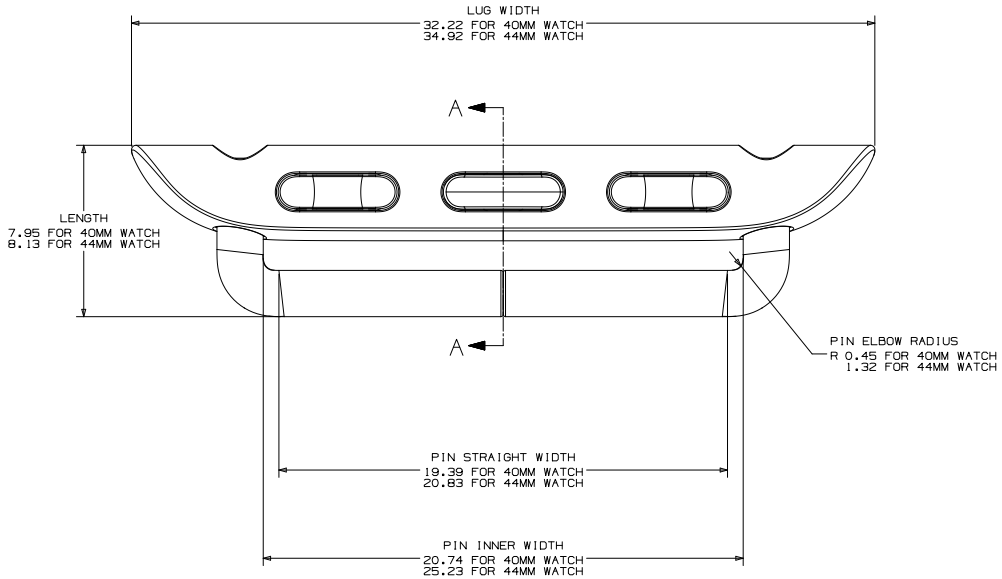

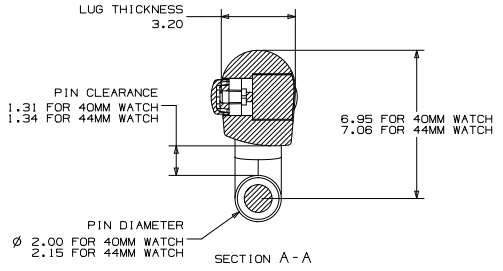

METRIC		Apple Inc.	
DRAFTER: APPLE INC.	DATE: 09/21/18	NOTICE OF PROPRIETARY PROPERTY: THE INFORMATION CONTAINED HEREIN IS THE PROPRIETARY PROPERTY OF APPLE INC. THE POSSESSOR AGREES TO THE FOLLOWING: (i) TO MAINTAIN THIS DOCUMENT IN CONFIDENCE (ii) NOT TO REPRODUCE OR COPY IT (iii) NOT TO REVEAL OR PUBLISH IT IN WHOLE OR PART (iv) ALL RIGHTS RESERVED	
DESIGNER: APPLE INC.	DATE: 09/21/18		
DIMENSIONS ARE IN MILLIMETERS TOLERANCES		TITLE: APPLE WATCH LUG	
		DRAWING NUMBER	REV. 01
DO NOT SCALE DRAWINGS			
THIRD ANGLE PROJECTION	SIZE D	SCALE: NONE	SHT 1 OF 4

NX GENERATED

Copyright © 2024 Apple Inc. All Rights Reserved.

20. StandBy Mounts

StandBy provides iPhone users a full-screen experience with glanceable information designed to be viewed from a distance when iPhone is in landscape orientation, locked, and charging. StandBy can be personalized to display a range of widgets and supports Live Activities, Siri, incoming calls, and notifications. StandBy remembers user's preferred views when using MagSafe.

Figure 20-1 MagSafe example

This feature is supported on iOS 17.0 or later.

2024-05-13 | Copyright © 2024 Apple Inc. All Rights Reserved.

20.1 Product Design

Figure 20-2 StandBy mount example

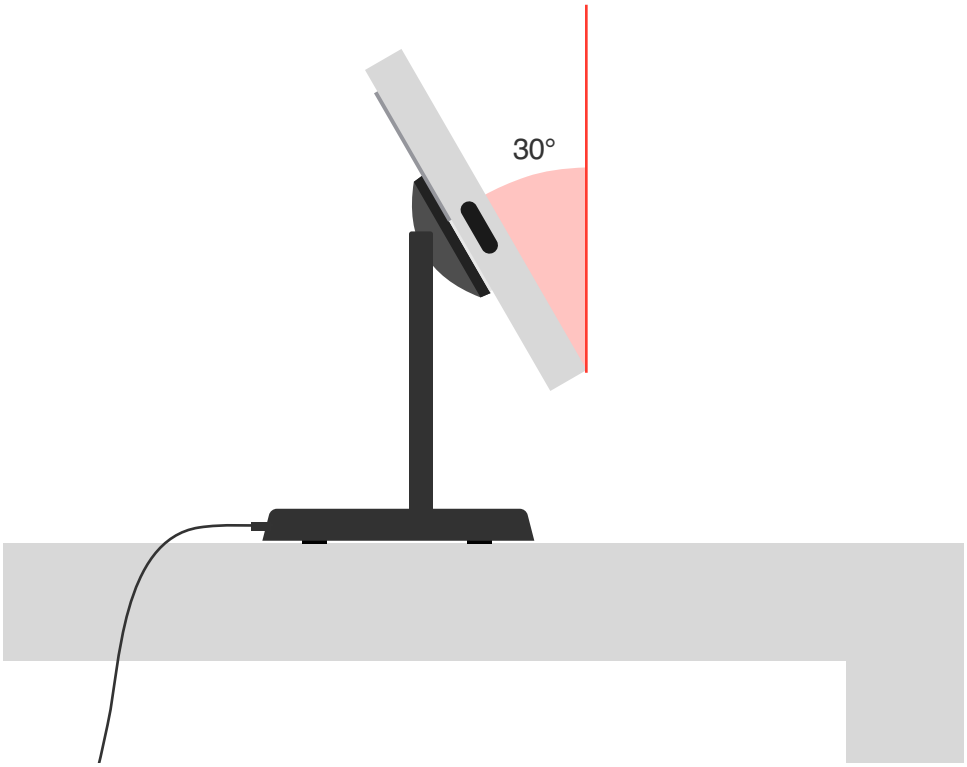

Mounts supporting StandBy shall:

- Support landscape orientation.
- Support inductive or wired device charging.
- Not obstruct or touch the device cover glass or any device sensors.
- Not cause Scratches and Damage (page 26).

The mounts should:

- Prevent free rotation of the device.
- Enable an adjustable backward tilt of at least 30° for optimal visibility.
- Be stable to prevent unintentionally exiting StandBy.
- Not obstruct Access to Controls (page 33).

2024-05-13 | Copyright © 2024 Apple Inc. All Rights Reserved.

- Implement the MagSafe Accessory Magnet Array (page 164).

20.2 Test Procedures

20.2.1 Equipment

The following equipment is necessary:

- Supported device running iOS 17.0 or later.
- A charger, if not integrated in accessory.

20.2.2 Enable StandBy

1. Attach locked device in landscape orientation to the accessory.
2. Attach a charger if the accessory does not integrate inductive or wired charging.
3. Verify device enters StandBy within a few seconds.

20.2.3 Product Design

Verify the StandBy Mount:

1. Supports landscape orientation.
2. Does not obstruct or touch the device cover glass or any device sensors.
3. Does not scratch or damage device.

2024-05-13 | Copyright © 2024 Apple Inc. All Rights Reserved.

21. Continuity Camera Mounts

Continuity Camera enables device cameras to be used with Apple TV or Mac and supports Portrait, Studio Light, Center Stage, Reactions, and Desk View video effects. System requirements for Continuity Camera are available at https://support.apple.com/en-us/108046#camera.

Mounts supporting Continuity Camera securely hold a device at the optimal height and angle to use with FaceTime and other apps.

Figure 21-1 MacBook Desk View example

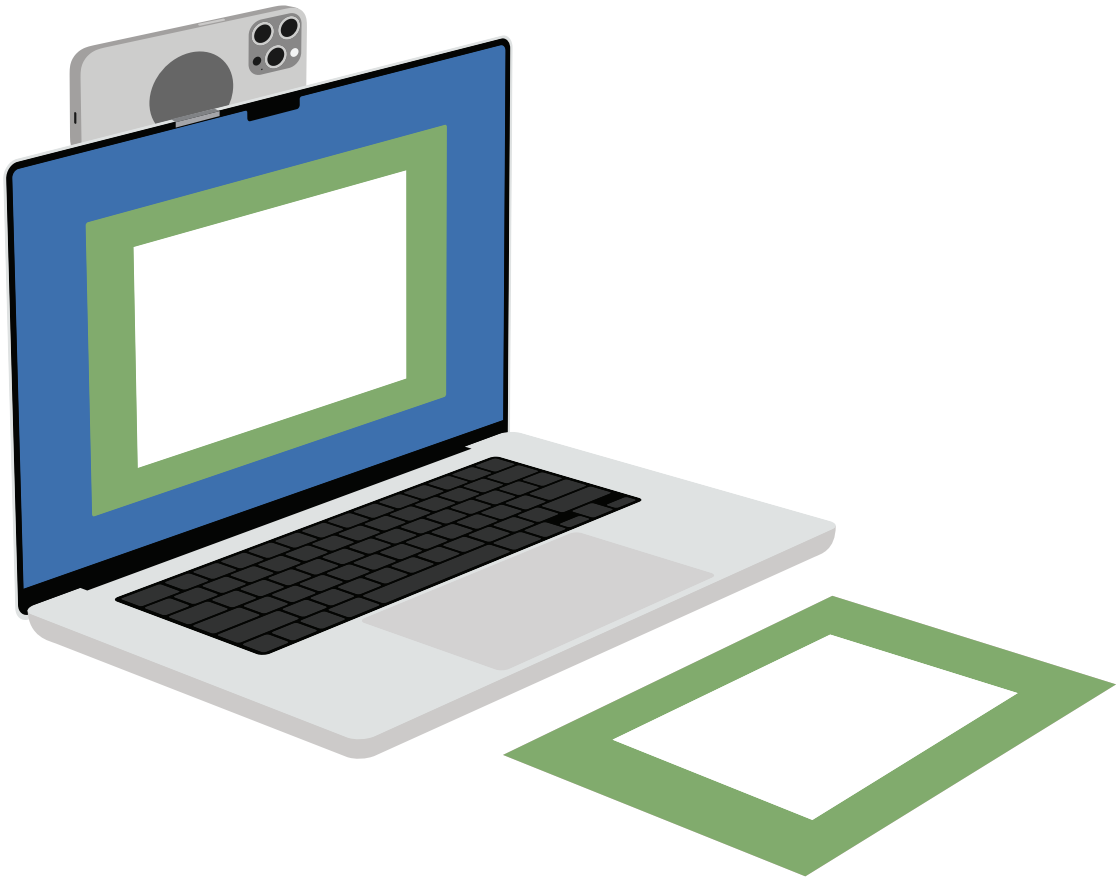

2024-05-13 | Copyright © 2024 Apple Inc. All Rights Reserved.

21.1 Product Design

Mounts supporting Continuity Camera shall:

- Support devices in portrait and landscape orientations.
- Enable use of a USB-C cable or USB to Lightning charge cable.
- Not touch the device cover glass, block any device camera field of view, or obstruct any ambient light sensors, see Device Dimensional Drawings (page 276).
- Not cause Scratches and Damage (page 26).

The mounts should:

- Prevent free rotation of the device.
- Enable a device camera lens height of at least 228 mm to support Desk View.
- Not obstruct Access to Controls (page 33).
- Implement the MagSafe Accessory Magnet Array (page 164).
- Support Tripod Connections (page 31).

Additional requirements apply to mounts used in the following scenerios:

- Apple TV Mount (page 119)
- MacBook Mount (page 120)
- iMac or Display Mount (page 121)

2024-05-13 | Copyright © 2024 Apple Inc. All Rights Reserved.

21.2 Apple TV Mount

Figure 21-2 Apple TV mount example

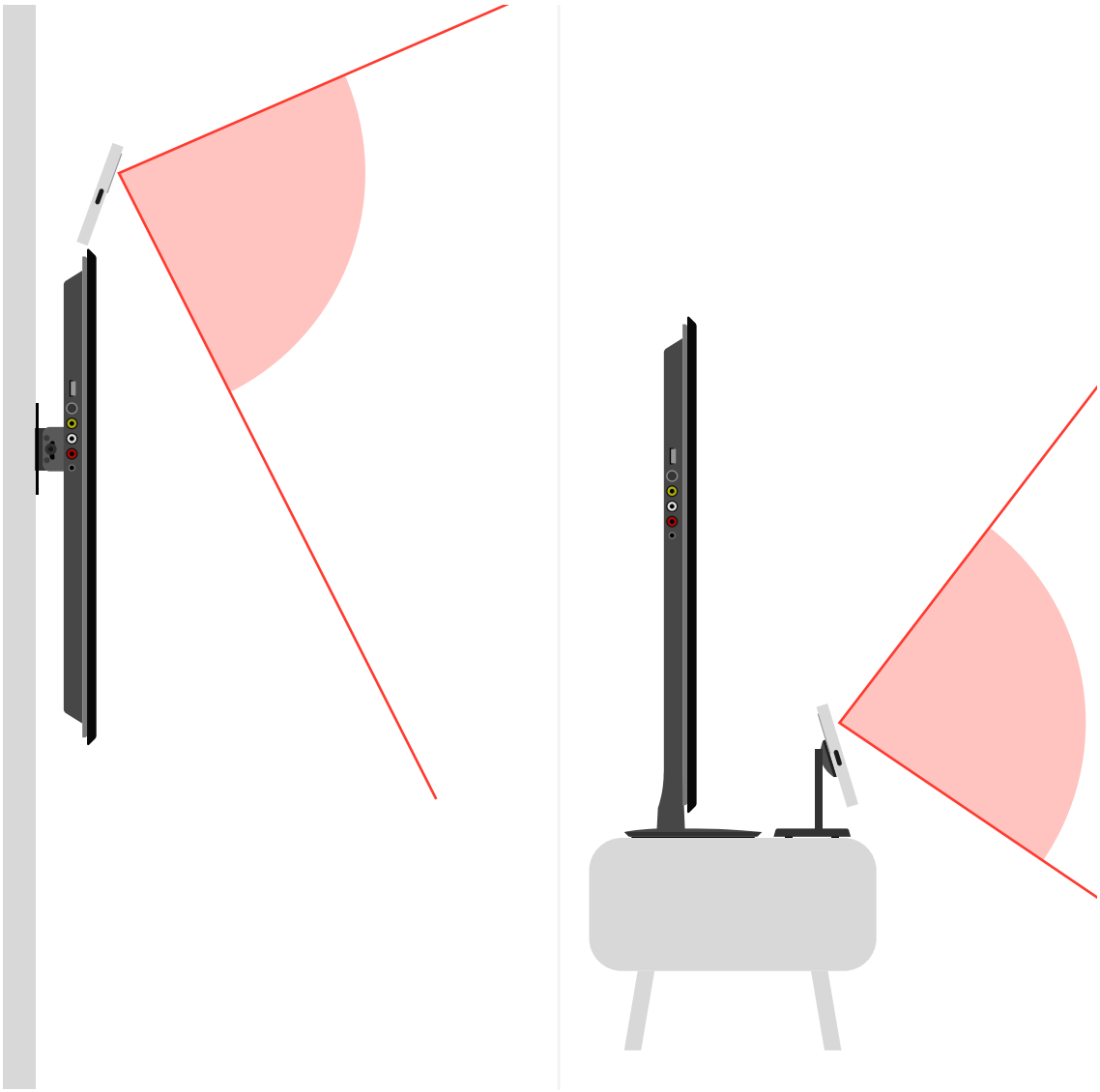

A mount designed for Apple TV shall:

- Be stable when placed on top, or in front of a TV.
- Not touch the display glass (active and non-active areas).
- Not sandwich or squeeze the TV and device together.

The mount should enable upward and downward tilt.

2024-05-13 | Copyright © 2024 Apple Inc. All Rights Reserved.

21.3 MacBook Mount

Figure 21-3 MacBook mount example

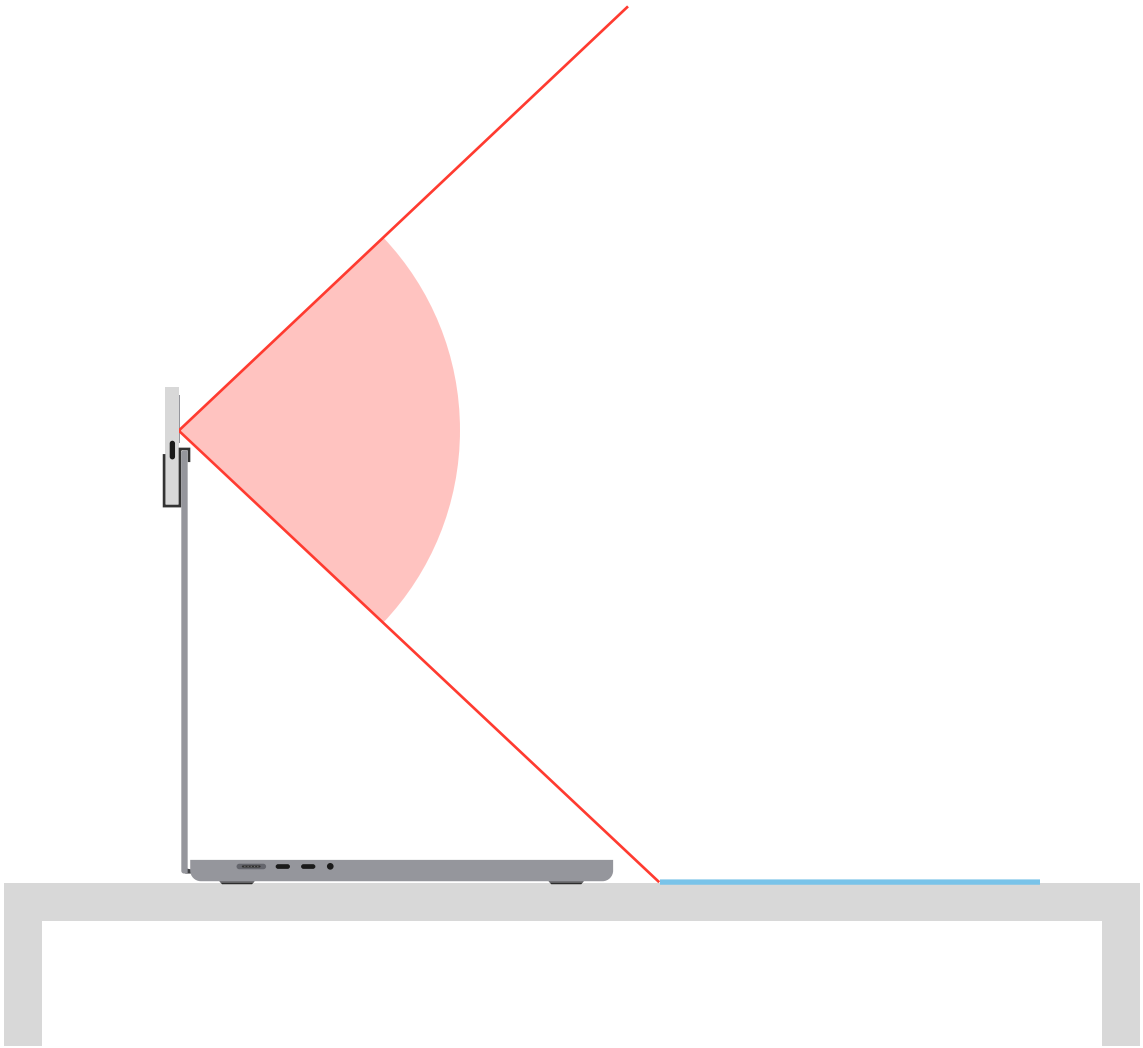

A mount designed for MacBook, MacBook Air, and MacBook Pro shall:

- Not scratch or damage the MacBook.
- Not touch the MacBook display glass (active and non-active areas).
- Not interfere with or prevent fully closing the MacBook.
- Not sandwich or squeeze the MacBook and device together.

The mount should:

- Not cover or touch any portion of the MacBook display glass, camera, or other sensors.
- Enable a downward tilt in portrait orientation from 0° to 12° to support Desk View.

2024-05-13 | Copyright © 2024 Apple Inc. All Rights Reserved.

- Minimize the mass to maintain stability of the display.

21.4 iMac or Display Mount

Figure 21-4 Display mount example

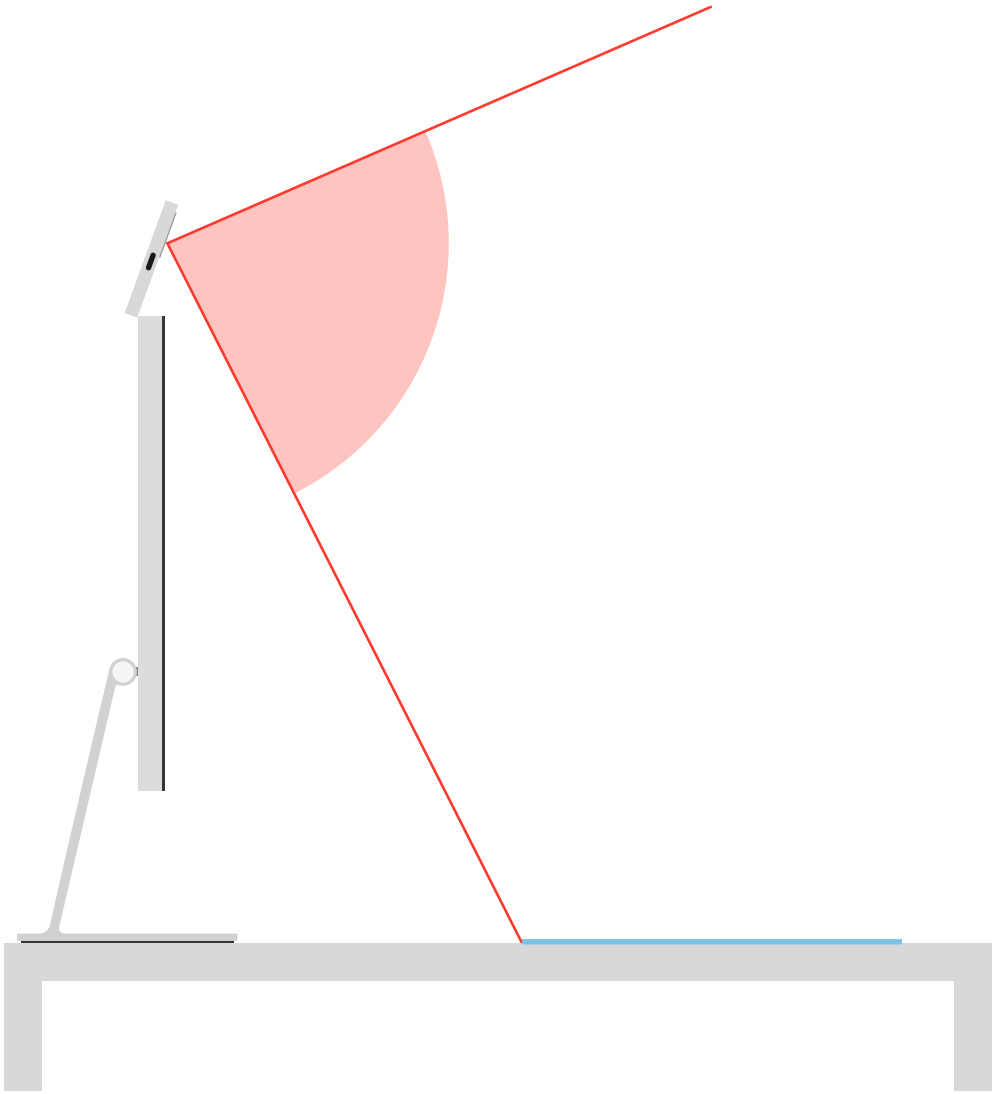

A mount designed for iMac or displays shall:

- Not scratch or damage the iMac or display.
- Not touch the display glass (active and non-active areas).
- Not sandwich or squeeze the iMac or display and device together.

2024-05-13 | Copyright © 2024 Apple Inc. All Rights Reserved.

The mount should:

- Not cover or touch any portion of the display glass, camera, microphones, or other sensors.
- Enable a downward tilt from 0° to 30° to support Desk View.

21.5 Test Procedures

21.5.1 Equipment

The following equipment is necessary to perform the tests in this procedure:

- If the mount is designed for Apple TV:
  - Supported devices running iOS 17.0 or later.
  - An Apple TV 4K (2nd generation) or later running tvOS 17.0 or later, connected to a TV.
- If the mount is designed for Mac:
  - Supported devices running iOS 16.0 or later.
  - A Mac computer running macOS 13.0 Ventura or later.
  - A MacBook, MacBook Air, and MacBook Pro if the mount is designed for MacBook.
  - An iMac if the mount is designed for iMac.
  - A variety of displays if the mount is designed for external displays.
  - A USB-C cable.
  - A USB to Lightning charge cable.
- An Apple ID with two-factor authentication enabled and used on devices, Apple TV, and all Mac computers.
- A tripod, if the mount is designed for tripod connections.

21.5.2 Test Setup

21.5.2.1 Enable Continuity Camera on Apple TV

Configure an Apple TV and a device to enable Continuity Camera:

1. Open FaceTime on the Apple TV.
2. Select the user matching the device Apple ID.
3. Using the device, select the Continuity Camera notification and select Accept.
4. Attach the device to mount and orient it as prompted.
5. Verify Continuity Camera view displays full screen in FaceTime.

21.5.2.2 Enable Continuity Camera on Mac

Configure a Mac and a device to enable Continuity Camera:

1. Connect the device to the Mac using a cable.

2024-05-13 | Copyright © 2024 Apple Inc. All Rights Reserved.

2. If the Mac is not a trusted computer, select Trust on the Trust This Computer alert on the device.
3. To use Continuity Camera wirelessly, disconnect the cable.
4. Attach the device to mount.
5. Open FaceTime on the Mac.
6. If the 'Use your iPhone as a Camera for your Mac' alert appears, select Continue.
7. Select the Continuity Camera option from the Video menu.
8. Verify Continuity Camera view displays in FaceTime.

Reconnect after the Mac and/or device are in sleep mode:
1. Wake the device and the Mac.
2. Connect the device to the Mac using a cable for a wired connection or disconnect the cable for a wireless connection.
3. Attach the device to the mount.
4. Open FaceTime on the Mac and select Continuity Camera from the Video menu.
5. Verify Continuity Camera view displays in FaceTime.

21.5.3 Product Design

Verify the mount:
1. Supports portrait and landscape orientations.
2. Does not touch the device cover glass or block any device camera field of view.
3. Does not scratch or damage the device.
4. When designed for tripods, complies with ISO 1222:2010.

If the mount is designed for Apple TV, verify the mount:
1. Is stable when placed on top, or in front of a TV.
2. Does not touch the display glass.
3. Does not sandwich or squeeze the TV and device together.

If the mount is designed for MacBook, iMac, or displays, verify the mount:
1. Does not touch the display glass.
2. Does not block any MacBook, iMac, or display camera field of view.
3. Does not sandwich or squeeze the device, MacBook, iMac, or display together.
4. Does not scratch or damage the device, MacBook, iMac, or display.
5. Enables use of USB-C cables or USB to Lightning charge cables.

21.5.4 Center Stage

Center Stage is a video effect available on Apple TV and in the Mac Control Center. Enabling Center Stage on Apple TV, or selecting it in the Control Center Video Effects causes the video to follow people's faces as they move within the Continuity Camera field of view. The video will zoom (in and out) and pan (left to right, right to left, up and down), to keep people's faces in the video frame.

2024-05-13 | Copyright © 2024 Apple Inc. All Rights Reserved.

21.5.4.1 Center Stage on Apple TV

Perform mount testing using the FaceTime app on Apple TV to ensure the mount is not visible in the field of view:

1. Observe the Continuity Camera video from different positions using Center Stage face tracking, from the most extreme visible positions (left, right, top, bottom, and all four corners).
2. Verify there are no visual anomalies caused by the mount in any position.

21.5.4.2 Center Stage on Mac

Perform mount testing using the Photo Booth app on the Mac, with and without Center Stage enabled, to ensure the mount is not visible in the field of view:

1. Open the Photo Booth app on the Mac:
   a. Use the Camera menu to select Continuity Camera.
   b. Use the still photo mode.
2. Use the Mac Control Center menu to select Video Effects, and enable Center Stage.
3. Capture photos from different positions using Center Stage face tracking, in portrait and landscape orientation from the most extreme visible positions (left, right, top, bottom, and all four corners), waiting 5 seconds between each photo.
4. Use the Mac Control Center menu to select Video Effects, and disable Center Stage.
5. Capture photos in portrait and landscape orientation, waiting 5 seconds between each photo.
6. Using the Photo Booth film strip feature, verify all photos taken during the test:
   a. Are saved to the computer.
   b. Are clearly displayed when viewed.
   c. Have no visual anomalies caused by the mount in either portrait and landscape orientation.

21.5.5 Desk View

Desk View is a video effect available in the Mac Control Center. Selecting Video Effects and enabling Desk View causes a confirmation dialog box to appear, then a separate Desk View window opens. The tilt angle of the mount and its position determines the Desk View field of view. Adjust the tilt angle as necessary to display the desktop subject matter. Remote viewers will see the subject matter from the presenters perspective. Closing the Desk View window disables Desk View.

1. Ensure the device is logged into the same Apple ID account used on the Mac.
2. Place the device in the mount and on the MacBook, iMac, display, tripod or free-standing support.
3. Perform mount testing using the FaceTime app with the Desk View video effect enabled.
   a. Open the FaceTime app on the Mac, and use the Video menu to select the Continuity Camera.
   b. Use the Mac Control Center menu to select Video Effects, and enable Desk View.
   c. Verify the Desk View window is displayed.
4. In both landscape and portrait orientation:
   a. Adjust the tilt angle of the mount to display the desktop subject matter in the Desk View window.

2024-05-13 | Copyright © 2024 Apple Inc. All Rights Reserved.

b. Verify the desktop subject matter is visible in the Desk View window, and clearly displayed.
c. Verify there are no visible anomalies caused by the mount in the Desk View window.
d. Verify the user's face is still visible in FaceTime while Desk View is showing the desktop subject matter.

2024-05-13 | Copyright © 2024 Apple Inc. All Rights Reserved.

Features

22. Accessory Power (USB-C)

This chapter applies to devices integrating a USB-C connector.

Accessory power enables accessories to draw a limited amount of power from a device, thereby avoiding the need to integrate a battery or connect to an external power source. This eliminates the need for users to monitor and charge the accessory and enables the accessory to function as long as the device has power. Accessories designed to temporarily connect to the device are good candidates for using accessory power.

Accessories drawing power from the device shall comply with *USB Type-C Cable and Connector Specification, Release 2.3*. Accessories should also support USB Power Delivery (PD) (page 204).

Accessories benefitting from accessory power include:

- Headsets (page 82).
- Adapters (page 76).
- Keyboards (page 86).
- External Storage (page 101).

22.1 Available Current

The following table lists the current available to an accessory.

Table 22-1 Available Current

Device	Default	USB Type-C Current (page 205)	USB Power Delivery (PD) (page 204)
iPhone 15 Pro Max	900 mA	900 mA	900 mA (4.5 W)
iPhone 15 Pro	900 mA	900 mA	900 mA (4.5 W)
iPhone 15 Plus	500 mA	500 mA	900 mA (4.5 W)
iPhone 15	500 mA	500 mA	900 mA (4.5 W)
iPad Pro 13-inch (M4)	900 mA	3.0 A	3.0 A (15 W)
iPad Pro 11-inch (M4)	900 mA	3.0 A	3.0 A (15 W)
iPad Air 13-inch (M2)	900 mA	1.5 A	1.5 A (7.5 W)
iPad Air 11-inch (M2)	900 mA	1.5 A	1.5 A (7.5 W)

2024-05-13 | Copyright © 2024 Apple Inc. All Rights Reserved.

Device	Default	USB Type-C Current (page 205)	USB Power Delivery (PD) (page 204)
iPad Pro 12.9-inch (6th generation)	900 mA	3.0 A	3.0 A (15 W)
iPad Pro 12.9-inch (5th generation)	900 mA	3.0 A	3.0 A (15 W)
iPad Pro 12.9-inch (4th generation)	900 mA	1.5 A	1.5 A (7.5 W)
iPad Pro 12.9-inch (3rd generation)	900 mA	1.5 A	1.5 A (7.5 W)
iPad Pro 11-inch (4th generation)	900 mA	3.0 A	3.0 A (15 W)
iPad Pro 11-inch (3rd generation)	900 mA	3.0 A	3.0 A (15 W)
iPad Pro 11-inch (2nd generation)	900 mA	1.5 A	1.5 A (7.5 W)
iPad Pro 11-inch (1st generation)	900 mA	1.5 A	1.5 A (7.5 W)
iPad Air (5th generation)	900 mA	1.5 A	1.5 A (7.5 W)
iPad Air (4th generation)	900 mA	1.5 A	1.5 A (7.5 W)
iPad mini (6th generation)	900 mA	1.5 A	1.5 A (7.5 W)
iPad (10th generation)	500 mA	1.5 A	1.5 A (7.5 W)

22.2 Fast Role Swap (FRS)

iPads with a USB-C connector support USB Power Delivery (PD) (page 204) Fast Role Swap (FRS).

22.3 Test Procedures

22.3.1 Maximum Accessory Power

This test procedure applies to accessories drawing power from the device. The accessory needs to be exercised to its full capability.

The example accessory in this test procedure is an external USB 3 drive claiming to draw up to 900 mA from the USB 3 host. The accessory is exercised by reading and writing a large file. Adapt this procedure as needed for different accessory types.

22.3.1.1 Equipment

The following equipment is necessary:

- An external USB drive in APFS format (the example accessory).
- A Mac with USB-C.
- A USB-IF certified USB-C to USB-C Full-Featured cable.
- A USB-C breakout board or USB-IF approved test fixture, such as:

- FS-HUCP available at https://fixturesolution.com/product/usb2-0-type-c-signal-quality-test-fixture/.
- FS-HUCR available at https://fixturesolution.com/product/usb-type-c-high-speed-signal-quality-test-fixture/ .

- An oscilloscope with a current probe.

22.3.1.2 Setup

1. Using the current probe attach the oscilloscope to the current loop circuit of the accessory, or the USB-C breakout board.
2. Verify the oscilloscope configuration settings match the following:
   a. Acquisition: >5 M samples/s.
   b. Current Channel: 200 mA/div.
   c. Horizontal Channel: 100 µs/div.
   d. Voltage Channel: 1 V/div, bandwidth limited.
   e. Infinite persistence (reset before each test case).
   f. Adjust offset down, to be able see 7 divisions.
   g. Adjust offset towards the left, to maximize the window.
   h. Trigger: Current Channel, Positive Threshold, 900 mA, Normal Mode.
3. Connect the Mac to the external USB drive using the USB-C cable.
4. Launch Terminal on the Mac, and enter the following command:
   - `dd if=/dev/random of=~/Desktop/testfile.dat count=1024 bs=78643200`
5. The new file `~/Desktop/testfile.dat` is the file to use for testing.

22.3.1.3 Test Cases

22.3.1.3.1 Enumeration

1. Verify the external USB drive fully enumerates in the Mac System Report:
   a. Select Apple Menu > 'About this Mac'.
   b. Select 'More Info...'.
   c. Select 'System Report...'.
   d. Select USB from the sidebar.
2. Verify the accessory is displayed in the USB Device Tree.
3. Verify the speed displayed is one of the following:
   a. Up to 5 Gb/s.
   b. Up to 10 Gb/s.

22.3.1.3.2 Idle

1. Record the maximum current while idle.

2024-05-13 | Copyright © 2024 Apple Inc. All Rights Reserved.

2. Verify the maximum current does not exceed 900 mA.

22.3.1.3.3 Write to USB Drive

1. Use Finder to copy the `testfile.dat` from the Mac to the USB drive.
2. Record the maximum current.
3. Verify the maximum current does not exceed 900 mA.

22.3.1.3.4 Read from USB Drive

1. Use Finder to copy the `testfile.dat` from the USB drive to the Mac.
2. Record the maximum current.
3. Verify the maximum current does not exceed 900 mA.

2024-05-13 | Copyright © 2024 Apple Inc. All Rights Reserved.

23. Accessory Power (Lightning)

Accessory power enables accessories to draw a limited amount of power from a device, thereby avoiding the need to integrate a battery or connect to an external power source. This eliminates the need for users to monitor and charge the accessory and enables the accessory to function as long as the device has power. Accessories designed to temporarily connect to the device are good candidates for using accessory power.

See the Accessory Interface Specification (page 24) for more information.

2024-05-13 | Copyright © 2024 Apple Inc. All Rights Reserved.

24. App Discovery

The App Discovery feature enables accessories to retrieve a list of installed apps on the device capable of communicating with the accessory. See App Launch (page 133) to make use of the list.

See the Accessory Interface Specification (page 24) for more information.

2024-05-13 | Copyright © 2024 Apple Inc. All Rights Reserved.

25. App Launch

Accessories supporting the App Launch feature can request a device launch an app on its behalf.

Figure 25-1 App Launch alert

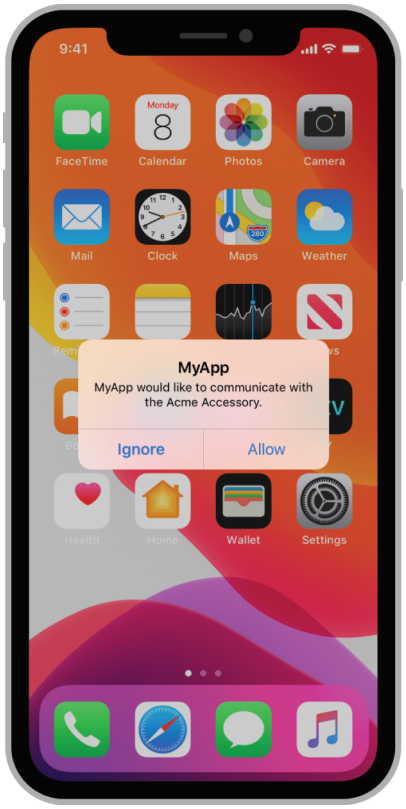

See the Accessory Interface Specification (page 24) for more information.

2024-05-13 | Copyright © 2024 Apple Inc. All Rights Reserved.

26. App Match

The App Match feature enables accessories supporting an External Accessory Protocol to match with compatible apps on the App Store.

When connected for the first time, the device asks the user if they would like to visit the App Store and view compatible apps. Subsequently, this action may be repeated using Settings > General > About > '[Accessory name]' > 'Find App for Accessory'.

Figure 26-1 App Match alert

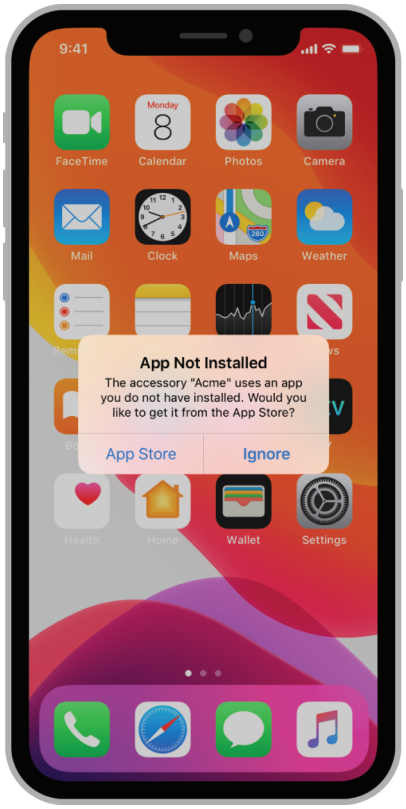

See the Accessory Interface Specification (page 24) for more information.

2024-05-13 | Copyright © 2024 Apple Inc. All Rights Reserved.

27. Bluetooth Accessory Identification

This chapter describes Apple-specific Bluetooth commands extending accessory capabilities beyond those supported by standard Bluetooth profiles.

To enable Apple-specific features, the accessory shall support HFP Command AT+XAPL (page 135), which provides accurate information about the accessory's supported features. The device will use the information sent by this command to enable and disable custom commands.

The accessory shall send the following AT+XAPL command after making a successful HFP Service Level Connection (SLC) to the device. The accessory should send an AT+XAPL command first, before sending any additional Apple-specific commands. See Siri (page 181) and Bluetooth Headset Battery Level Indication (page 137).

27.1 HFP Command AT+XAPL

Description: Enables custom AT commands from an accessory.

Initiator: Bluetooth accessory

Format: AT+XAPL=*vendorID*-*productID*-*version*,*features*

Parameters:

- *vendorID*: A string representation of the hex value of the vendor ID from the manufacturer, without the `0x` prefix.
- *productID*: A string representation of the hex value of the product ID from the manufacturer, without the `0x` prefix.
- *version*: The software version.
- *features*: A base-10 representation of a bit field. Available features are:
  - Bit 0 = reserved
  - Bit 1 = The accessory supports battery reporting (reserved only for battery operated accessories).
  - Bit 2 = The accessory is docked or powered (reserved only for battery operated accessories).
  - Bit 3 = The accessory supports Siri status reporting.
  - Bit 4 = the accessory supports noise reduction (NR) status reporting.
  - All other values are reserved.

Example: AT+XAPL=ABCD-1234-0100,10 (Supports battery reporting and Siri status)

2024-05-13 | Copyright © 2024 Apple Inc. All Rights Reserved.

Response: +XAPL=iPhone,*features*

2024-05-13 | Copyright © 2024 Apple Inc. All Rights Reserved.

28. Bluetooth Headset Battery Level Indication

Any Hands-Free Bluetooth headset accessory may display its battery level to the user as an indicator icon in the device status bar. This feature is supported on all devices supporting the Hands-Free Profile, including iPhone and iPad.

Headset battery indication is implemented by two Apple-specific Bluetooth HFP AT commands, HFP Command AT+XAPL (page 135) and HFP Command AT+IPHONEACCEV (page 137)

28.1 HFP Command AT+IPHONEACCEV

Description: Reports a headset state change.

Initiator: Headset accessory

Format: `AT+IPHONEACCEV=`*Number of key/value pairs*`,`*key1*`,`*val1*`,`*key2*`,`*val2*`,...`

Parameters:

- *Number of key/value pairs*: The number of parameters coming next.
- *key*: the type of change being reported:
  - 1 = Battery Level
  - 2 = Dock State
- *val*: the value of the change:
  - Battery Level: string value between '0' and '9'
  - Dock State: 0 = undocked, 1 = docked

Example: `AT+IPHONEACCEV=1,1,3`

2024-05-13 | Copyright © 2024 Apple Inc. All Rights Reserved.

29. Device Power (USB-C)

Accessories may provide power to devices using USB-C.

Apple recommends providing power to the device whenever possible for the best user experience.

Accessories providing power to a device shall:

- Connect to the device either through an integrated USB-C Plug (page 263) or a USB-C cable.
- Use USB Type-C Current (page 205) to identify their power capability and should use USB Power Delivery (PD) (page 204) to provide higher power, see https://support.apple.com/en-us/102574.
- Provide power at all times unless a direct user action is taken turning the accessory 'off'. Failure to provide power at all times may result in the accessory being unable to charge a device whose battery level is too low to boot.

Accessories may use the iAP2 (page 210) protocol in conjunction with USB Type-C Current (page 205) to allow for more granular control of the available current after the initial connection. Accessories shall not use iAP2 (page 210) to adjust available current in conjunction with USB Power Delivery (PD) (page 204).

Accessories providing power from a USB-C receptacle, see Providing Power (page 268).

29.1 External Power Source

Accessories drawing power from external power sources and providing all or a portion of their power to the device shall:

- Identify the power source's capability and report accordingly to the device.
- Not manipulate a device into drawing more power from the external power source than the device would normally draw when directly connected to the external power source.
- Derate the available power by the amount of power consumed by the accessory, if applicable.

Accessories drawing power from external power sources may inform the device when power is not available or only available at a reduced level (for example, from an internal battery) or when the user unplugs the accessory from the external power source (for example, an AC power adapter or AC "mains" power outlet). Power to the device shall be restored and the updated power providing capability change shall be communicated to the device when the user re-connects the external power source.

2024-05-13 | Copyright © 2024 Apple Inc. All Rights Reserved.

See AC Power Adapters (page 78), Integrated USB Receptacles (page 26), and User Supplied Cables and AC Power Adapters (page 27) for additional requirements specific to external USB power supplies/cables.

29.2 Power State Changes

Accessories shall not change the amount of power provided to a device unless:

- Direct user action is taken to turn the accessory on or off.
- An external power source (for example, mains electricity or battery) is connected to or disconnected from the accessory.
- The accessory's internal power source (for example, a battery) is depleted or loaded to the point where it is no longer capable of supplying its declared power providing capability or is now capable of supplying more power than previously declared.

2024-05-13 | Copyright © 2024 Apple Inc. All Rights Reserved.

30. Device Power (Lightning)

Accessories may provide power to devices using Lightning.

Apple recommends providing power to the device whenever possible for the best user experience.

Accessories providing power to a device shall connect to the device either through an integrated Lightning connector or a USB to Lightning cable. To incorporate an integrated Lightning connector, the accessory developer shall be a member of the Apple MFi Licensing Program (page 24).

Accessories providing power to a device shall either:

- Provide direct power, see Direct Power Source (page 140).
- Manage power from external sources, see External Power Source (page 140).

Accessories without the potential for data communication with the device shall provide direct power to the device, see Direct Power Source (page 140).

30.1 Direct Power Source

Accessories providing power directly shall provide power at all times unless disabled by a direct user action. Failure to provide power at all times may result in the accessory being unable to charge a device whose battery level is too low to boot.

Accessory power source testing shall be performed with programmable loads, not devices. Device power draw varies with environmental factors.

30.2 External Power Source

Accessories drawing power from external power sources and providing all or a portion of their power to the device:

- Shall identify the power source's capability and report accordingly to the device.
- Shall not manipulate a device into drawing more power from the external power source than the device would normally draw when directly connected to the external power source.
- Shall not manipulate a device into drawing less than the minimum power required by the accessory compatibility claims if it is available from the external source, see Providing Power using USB Connectors (page 141).

2024-05-13 | Copyright © 2024 Apple Inc. All Rights Reserved.

Accessories drawing power from external power sources may inform the device when power is not available or only available at a reduced level (for example, from an internal battery) or when the user unplugs the accessory from the external power source (for example, an AC power adapter or AC "mains" power outlet). Power to the device shall be restored and the updated power providing capability change shall be communicated to the device when the user re-connects the external power source.

See AC Power Adapters (page 78), Integrated USB Receptacles (page 26), and User Supplied Cables and AC Power Adapters (page 27) for additional requirements specific to external USB power supplies/cables.

30.3 Declaring Capability

If the accessory provides power using a:

- USB-A receptacle, it shall use one of the following to declare its power providing capability:
  - USB Power Capability Vendor Request (page 200).
  - USB D+/D- Resistor Networks (page 201).
- USB-C receptacle, then:
  - It shall use one of the following to declare its power providing capability:
    - USB Type-C Current (page 205).
    - USB Power Delivery (PD) (page 204).
  - If the accessory does not have the potential for data communication with the device, it shall also support the *USB Battery Charging Specification, Release 1.2*.

30.4 Providing Power using USB Connectors

Accessories providing power from:

- A USB-C receptacle, see USB-C Receptacle (page 267).
- A USB-A receptacle, see USB-A Receptacle (page 262).

30.5 Labeling Multiple Connectors

If the accessory has multiple connectors with different device compatibilities, iPad-compatible connectors shall be labeled with the text 'iPad' unless it is physically impossible to connect an iPad to iPhone compatible connectors.

2024-05-13 | Copyright © 2024 Apple Inc. All Rights Reserved.

30.6 Fast Charge for iPhone (20 W)

Accessories advertising "fast charge" for iPhone (https://support.apple.com/en-us/102574) shall:

- Support USB Power Delivery (PD) (page 204).
- Supply at least 20 W (2.22 A at 9 V) using USB PD.
- Claim compatibility with at least one of the following iPhone models:
  - iPhone 14 Pro Max
  - iPhone 14 Pro
  - iPhone 14 Plus
  - iPhone 14
  - iPhone SE (3rd generation)
  - iPhone 13 Pro Max
  - iPhone 13 Pro
  - iPhone 13
  - iPhone 13 mini
  - iPhone 12 Pro Max
  - iPhone 12 Pro
  - iPhone 12
  - iPhone 12 mini
  - iPhone SE (2nd generation)
  - iPhone 11 Pro Max
  - iPhone 11 Pro
  - iPhone 11
  - iPhone XS Max
  - iPhone XS
  - iPhone XR
  - iPhone X
  - iPhone 8 Plus
  - iPhone 8

Accessories such as charging cables should be capable of supporting up to 60 W (3 A at 20 V) to provide compatibility with a variety of sources and devices.

2024-05-13 | Copyright © 2024 Apple Inc. All Rights Reserved.

30.7 Overcurrent and Short Circuit Protection

Figure 30-1 Overcurrent and short circuit protection

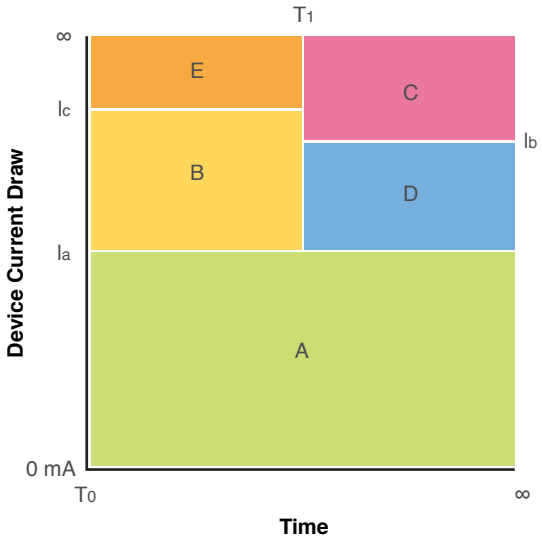

Power-providing accessories shall implement overcurrent and short circuit protection for each region in Figure 30-1 (page 143) according to Table 30-1 (page 143), Table 30-2 (page 143), and Table 30-3 (page 144).

Table 30-1 Overcurrent / short circuit protection current thresholds

Threshold	Definition
I_a	Nominal accessory output current (for example, 1000 mA, 2100 mA, 2400 mA, 3000 mA).
I_b	I_a + 60%.
I_c	Lowest device current draw causing accessory output voltage (measured at Lightning Device Power) to drop below 2 V.

Table 30-2 Overcurrent / short circuit protection time thresholds

Threshold	Definition
T_0	Start of any device current draw transient.
T_1	Accessory overcurrent/short circuit deglitch/debounce time, shall ≥ T_0 + 1 ms.

2024-05-13 | Copyright © 2024 Apple Inc. All Rights Reserved.

Table 30-3 Overcurrent / short circuit protection behaviors

Region	Name	Accessory Behavior
A	Normal Operation	Accessory shall not limit or shutdown output current.
B	Overcurrent Transient	Accessory shall not shutdown output current. Accessory may limit output current to I_a or higher.
C	Overcurrent	Accessory shall shutdown output current.
D	Potential Overcurrent	Accessory may shutdown output current.
E	Potential Short Circuit	If Lightning Device Power voltage drops below 2 V, the accessory may trigger short circuit protection. Accessories shall not trigger short circuit protection on device current draw.

30.8 Overcurrent and Short Circuit Protection Resets

Accessory overcurrent and short circuit protection shall reset without mechanical intervention.

30.9 Power State Changes

Accessories shall not change the amount of power provided to a device unless:

- Direct user action is taken to turn the accessory on or off.
- An external power source (for example, mains electricity or battery) is connected to or disconnected from the accessory.
- The accessory's internal power source (for example, a battery) is depleted or loaded to the point where it is no longer capable of supplying its declared power providing capability or is now capable of supplying more power than previously declared.

2024-05-13 | Copyright © 2024 Apple Inc. All Rights Reserved.

31. Device Power (Inductive)

Accessories may provide power to devices using inductive power transmitters, specifically:

- Qi Wireless Power (page 145)
- MagSafe (page 146)

31.1 Qi Wireless Power

The following devices support Qi Wireless Power (page 145):

- iPhone 15 Pro Max
- iPhone 15 Pro
- iPhone 15 Plus
- iPhone 15
- iPhone 14 Pro Max
- iPhone 14 Pro
- iPhone 14 Plus
- iPhone 14
- iPhone SE (3rd generation)
- iPhone 13 Pro Max
- iPhone 13 Pro
- iPhone 13
- iPhone 13 mini
- iPhone 12 Pro Max
- iPhone 12 Pro
- iPhone 12
- iPhone 12 mini
- iPhone SE (2nd generation)
- iPhone 11 Pro Max
- iPhone 11 Pro
- iPhone 11
- iPhone XS Max
- iPhone XS
- iPhone XR
- iPhone X
- iPhone 8 Plus

2024-05-13 | Copyright © 2024 Apple Inc. All Rights Reserved.

- iPhone 8
- MagSafe Charging Case (USB-C) for AirPods Pro (2nd generation)
- MagSafe Charging Case for AirPods Pro (2nd generation)
- MagSafe Charging Case for AirPods (3rd generation)
- Wireless Charging Case for AirPods

Accessories incorporating a Qi transmitter shall use an embedded Qi Certified subsystem or shall be Qi Certified according to *The Qi Wireless Power Transfer System, Power Class 0 Specification*, version 1.2.4, see https://www.wirelesspowerconsortium.com.

31.2 MagSafe

The following devices support MagSafe:

- iPhone 15 Pro Max
- iPhone 15 Pro
- iPhone 15 Plus
- iPhone 15
- iPhone 14 Pro Max
- iPhone 14 Pro
- iPhone 14 Plus
- iPhone 14
- iPhone 13 Pro Max
- iPhone 13 Pro
- iPhone 13
- iPhone 13 mini
- iPhone 12 Pro Max
- iPhone 12 Pro
- iPhone 12
- iPhone 12 mini
- MagSafe Charging Case (USB-C) for AirPods Pro (2nd generation)
- MagSafe Charging Case for AirPods Pro (2nd generation)
- MagSafe Charging Case for AirPods (3rd generation)

See the Accessory Interface Specification (page 24) for information on MagSafe.

31.3 Electromagnetic Compatibility (EMC)

Accessories providing inductive device power should be designed for electromagnetic compatibility.

2024-05-13 | Copyright © 2024 Apple Inc. All Rights Reserved.

Apple recommends shielding the magnetic field from the charging coil and maintaining a low impedance shield termination for cables to comply with regulatory EMC requirements for the completed product. Implementation, final compliance testing, report preparation, and labeling are the responsibilities of the company marketing and producing the product.

Cable termination is critical for reduced emissions. Cable termination and connectors should be kept away from the charging coil and cables should be routed away from the charging surface.

If emissions are present, adding clamp-on ferrites/absorbers to the cable can help reduce emissions. Selected ferrite/absorber materials should be rated for the failing frequencies.

Depending on the accessory's supported use cases, testing should be performed with the following power supplies:

- Apple USB-C Power Adapters:
  - Apple 140W USB-C Power Adapter
  - Apple 96W USB-C Power Adapter
  - Apple 70W USB-C Power Adapter
  - Apple 67W USB-C Power Adapter
  - Apple 30W USB-C Power Adapter
  - Apple 20W USB-C Power Adapter
  - Apple 35W Dual USB-C Port Compact Power Adapter
  - Apple 35W Dual USB-C Port Power Adapter
- Apple USB-A Power Adapters:
  - Apple 12W USB Power Adapter
  - Apple 5W USB Power Adapter
    - Model A1385 (US)
    - Model A1400 (Int.)
    - Model A1552 (UK)
    - Model A1443 (China)
    - Model A1444 (Australia)
    - Model A1486 (Brazil)
    - Model A1487 (Korea)
    - Model A1501 (Argentina)
- Apple Mac computers:
  - Apple MacBook Pro
  - Apple MacBook Air

If power sources are used differing from those listed above, emission testing should be performed while the power sources are on.

In addition to the use cases above, charging devices should be tested in idle mode for emissions.

Emissions tests should be conducted in accordance with standards referenced in the following:

2024-05-13 | Copyright © 2024 Apple Inc. All Rights Reserved.

- FCC CFR 47, Part 15
- ICES-003, Issue 5, CAN/CSA-CEI/IEC CISPR 22-10
- CISPR 22: 2008
- EN 55022: 2010
- AS/NZS CISPR 22:2009, TCVN 7189:2009
- VCCI V-3/2013.04
- GB 9254-2008, GB 17625.1-2012, GB 17625.2-2007, CNS 13438-2006
- CISPR 24: 2010
- EN 55024: 2010

Once the highest emitting combination is identified, complete testing should be performed on the configuration. Some regulatory domains may require EMC certification.

2024-05-13 | Copyright © 2024 Apple Inc. All Rights Reserved.

32. Ethernet over USB

Accessories may support Ethernet over USB using the Network Control Model (NCM) protocol to enable a device to access a wired network.

Accessories shall comply with the *Network Control Model Devices Specification, Revision 1.0*, see https://www.usb.org/document-library/network-control-model-devices-specification-v10-and-errata-and-adopters-agreement.

2024-05-13 | Copyright © 2024 Apple Inc. All Rights Reserved.

33. External Accessory Protocol

The External Accessory (EA) framework provides accessories the means to communicate with one or more apps using EA sessions, providing a read/write bytestream interface. Accessory developers specify a custom protocol between the application and the accessory. The design and maintenance of communication protocols between accessories and applications are entirely the responsibility of the accessory and app developers. External Accessory framework documentation can be found at https://developer.apple.com/documentation/externalaccessory.

See the Accessory Interface Specification (page 24) for more information.

2024-05-13 | Copyright © 2024 Apple Inc. All Rights Reserved.

34. HID Headset Remote

Devices may accept user input from headsets to control audio volume and media playback.

34.1 Requirements

Accessories implementing HID headset remote controls shall:

- Connect to the device using one of the following:
  - USB-C Plug (page 263).
  - Bluetooth (page 215).

HID headset remotes shall support the Human Interface Device (HID) (page 211) protocol.

The HID report descriptor for a headset remote shall declare support for the HID Consumer and/or Telephony pages and only send usages from Table 34-1 (page 151) and Table 34-2 (page 151).

Table 34-1 HID Consumer Page (`0x0C`) controls for use by headset remotes

Usage ID	Usage Name	Apple Function
`0x00B5`	Scan Next Track	Transport Right
`0x00B6`	Scan Previous Track	Transport Left
`0x00B9`	Random Play	Shuffle
`0x00BC`	Repeat	Repeat
`0x00E2`	Mute	Mute
`0x00E9`	Volume Increment	Volume Up
`0x00EA`	Volume Decrement	Volume Down
`0x025B`	Promote	Play More Like This
`0x025C`	Demote	Play Less Like This

Table 34-2 HID Telephony Page (`0x0B`) controls for use by headset remotes

Usage ID	Usage Name	Apple Function
`0x0021`	Flash	Center

2024-05-13 | Copyright © 2024 Apple Inc. All Rights Reserved.

If a user presses and holds the accessory control surface corresponding to the 'Transport Right' or 'Transport Left' function, devices may scrub forwards or backwards within the current playing media item. Accessories shall not present a separate 'Fast-Forward' or 'Reverse' control surface to the user for the same feature.

34.2 Examples

34.2.1 Headset Remote Example HID Report Descriptor (Telephony)

The following sample HID descriptor demonstrates how to implement telephony and volume controls.

```
USAGE_PAGE (Consumer Devices) 05 0C
USAGE (Consumer Control)      09 01
COLLECTION (Application)      A1 01
  LOGICAL_MINIMUM (0)         15 00
  LOGICAL_MAXIMUM (1)         25 01
  REPORT_SIZE (1)             75 01
  REPORT_COUNT (2)            95 02
  USAGE (Volume Increment)    09 E9    // Volume Up
  USAGE (Volume Decrement)    09 EA    // Volume Down
  INPUT (Data,Var,Abs)        81 02
  USAGE_PAGE (Telephony)      05 0B
  REPORT_COUNT (1)            95 01
  USAGE (Flash)               09 21    // Center
  INPUT (Data,Var,Abs)        81 02
  REPORT_SIZE (5)             75 05
  REPORT_COUNT (1)            95 01
  INPUT (Cnst, Var, Abs)      81 03
END_COLLECTION                C0
```

Each report is one byte, and each bit corresponds to one of the functions. For example, the following sample reports communicate the referenced button having been pressed:

- Volume Up is `0x01`
- Volume Down is `0x02`
- Center is `0x04`

34.2.2 Headset Remote Example HID Report Descriptor (Media Playback)

The following sample HID descriptor demonstrates how to implement media playback controls.

```
USAGE PAGE (Consumer Devices) 05 0C
USAGE (Consumer Control)      09 01
COLLECTION (Application)      A1 01
  LOGICAL MINIMUM (0)         15 00
```

2024-05-13 | Copyright © 2024 Apple Inc. All Rights Reserved.

```
  LOGICAL MAXIMUM (1)         25 01
  REPORT SIZE (1)             75 01
  REPORT COUNT (7)            95 07
  USAGE (Scan Next Track)     09 B5    // Transport Right
  USAGE (Scan Previous Track) 09 B6    // Transport Left
  USAGE (Mute)                09 E2    // Mute
  USAGE (Shuffle)             09 B9    // Shuffle
  USAGE (Repeat)              09 BC    // Repeat
  USAGE (Promote)             0A 5B 02 // Play More Like This
  USAGE (Demote)              0A 5C 02 // Play Less Like This
  INPUT (Data,Var,Abs)        81 02
END COLLECTION                C0
```

Each report is one byte, and each bit corresponds to one of the functions. For example, the following sample reports communicate the referenced button having been pressed:

- Transport Right is `0x01`
- Transport Left is `0x02`
- Mute is `0x04`

34.2.3 Headset Remote Example HID Report Descriptor (Telephony and Media Playback)

The following sample HID descriptor demonstrates how to implement all possible media playback controls along with the same controls found on the Apple headset remote.

```
USAGE_PAGE (Consumer Devices) 05 0C
USAGE (Consumer Control)      09 01
COLLECTION (Application)      A1 01
  LOGICAL_MINIMUM (0)         15 00
  LOGICAL_MAXIMUM (1)         25 01
  REPORT_SIZE (1)             75 01
  REPORT_COUNT (9)            95 09
  USAGE (Scan Next Track)     09 B5    // Transport Right
  USAGE (Scan Previous Track) 09 B6    // Transport Left
  USAGE (Mute)                09 E2    // Mute
  USAGE (Shuffle)             09 B9    // Shuffle
  USAGE (Repeat)              09 BC    // Repeat
  USAGE (Promote)             0A 5B 02 // Play More Like This
  USAGE (Demote)              0A 5C 02 // Play Less Like This
  USAGE (Volume Increment)    09 E9    // Volume Up
  USAGE (Volume Decrement)    09 EA    // Volume Down
  INPUT (Data,Var,Abs)        81 02
  USAGE_PAGE (Telephony)      05 0B
  REPORT_COUNT (1)            95 01
  USAGE (Flash)               09 21    // Center
  INPUT (Data,Var,Abs)        81 02
  REPORT_SIZE (5)             75 05
  REPORT_COUNT (1)            95 01
  INPUT (Cnst, Var, Abs)      81 03
```

2024-05-13 | Copyright © 2024 Apple Inc. All Rights Reserved.

```
END COLLECTION                C0
```

Each report is two bytes. The bits are assigned top-to-bottom (from 'Transport Right' to 'Center'). For example, the following sample reports communicate the referenced button having been pressed:

- Transport Right is `0x0100`
- Transport Left is `0x0200`
- Mute is `0x0400`
- Volume Up is `0x8000`
- Volume Down is `0x0001`
- Center is `0x0002`

2024-05-13 | Copyright © 2024 Apple Inc. All Rights Reserved.

35. Location Information

Location features enable accessories to provide Global Navigation Satellite System (GNSS) and sensor data (for example, speed) to devices in the form of National Marine Electronics Association (NMEA) sentences. Devices can use the additional information to augment built-in location services. For example, some external accessories provide more accurate or more frequent position updates. Additionally, devices can conserve power by using location information from a self-powered external accessory.

See the Accessory Interface Specification (page 24) for more information.

2024-05-13 | Copyright © 2024 Apple Inc. All Rights Reserved.

36. MagSafe Attach

The following devices support MagSafe Attach:

- iPhone 15 Pro Max
- iPhone 15 Pro
- iPhone 15 Plus
- iPhone 15
- iPhone 14 Pro Max
- iPhone 14 Pro
- iPhone 14 Plus
- iPhone 14
- iPhone 13 Pro Max
- iPhone 13 Pro
- iPhone 13
- iPhone 13 mini
- iPhone 12 Pro Max
- iPhone 12 Pro
- iPhone 12
- iPhone 12 mini

MagSafe Cases (page 32) shall:

- Claim compatibility with a MagSafe-capable device.
- Integrate a MagSafe Case Magnet Array (page 157).

Other MagSafe accessories shall:

- Claim compatibility with a MagSafe-capable device.
- Integrate a MagSafe Accessory Magnet Array (page 164).

Apple recommends the following magnet array vendors:

- Baotou INST Magnetic New Materials Co., Ltd. (https://www.instmagnets.com)
- Ningbo Sanhuan Magsound Industry & Trade Co., Ltd. (https://www.magsound.com)
- Quadrant Solutions, Inc. (https://www.quadrant.us)

2024-05-13 | Copyright © 2024 Apple Inc. All Rights Reserved.

36.1 MagSafe Case Magnet Array

Figure 36-1 MagSafe case magnet array

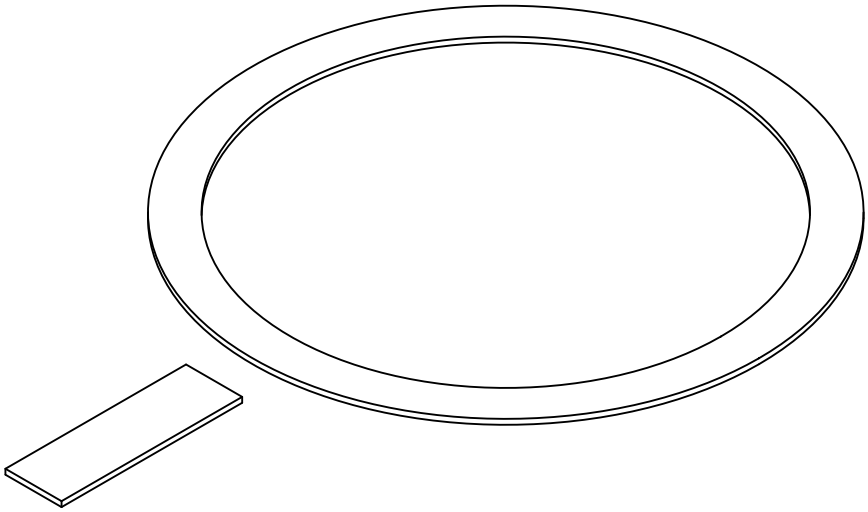

36.1.1 Product Design

Cases integrating a MagSafe case magnet array shall:

- Enclose the device.
- Have a uniform thickness no greater than 2.1 mm; Apple recommends 2.0 mm.
- Firmly attach to the device without relying on the magnets.
- Not integrate magnets on the back of the case other than the MagSafe magnets.
- Comply with requirements for Cases (page 32).
- Work with:
  - Apple MagSafe Charger.
  - Apple MagSafe Battery Pack.
  - iPhone Leather Wallet with MagSafe.

36.1.2 Mechanical

Magnets in the MagSafe case magnet array shall be positioned in the same plane.

The case and MagSafe case magnet array shall enable MagSafe accessories to magnetically self align within a 1.55 mm radial maximum.

2024-05-13 | Copyright © 2024 Apple Inc. All Rights Reserved.

36.1.2.1 Magnets

MagSafe case magnets shall be N45SH NdFeB with a 7 µm - 13 µm NiCuNi plating finish (or similar) and shall meet the requirements in Table 36-1 (page 158).

Table 36-1 Magnet properties

Property	Minimum	Maximum
Br	13.2 kGs	13.6 kGs
Hcb	12.75 kOe	
Hcj	20.50 kOe	
BHmax	43 MGOe	46 MGOe

36.1.2.2 Magnet Array

The magnets shall be positioned in the case following the dimensions and polarity shown in Figure 36-2 (page 159), Figure 36-3 (page 160) and Figure 36-4 (page 160).

2024-05-13 | Copyright © 2024 Apple Inc. All Rights Reserved.

Figure 36-2 MagSafe magnet array dimensions

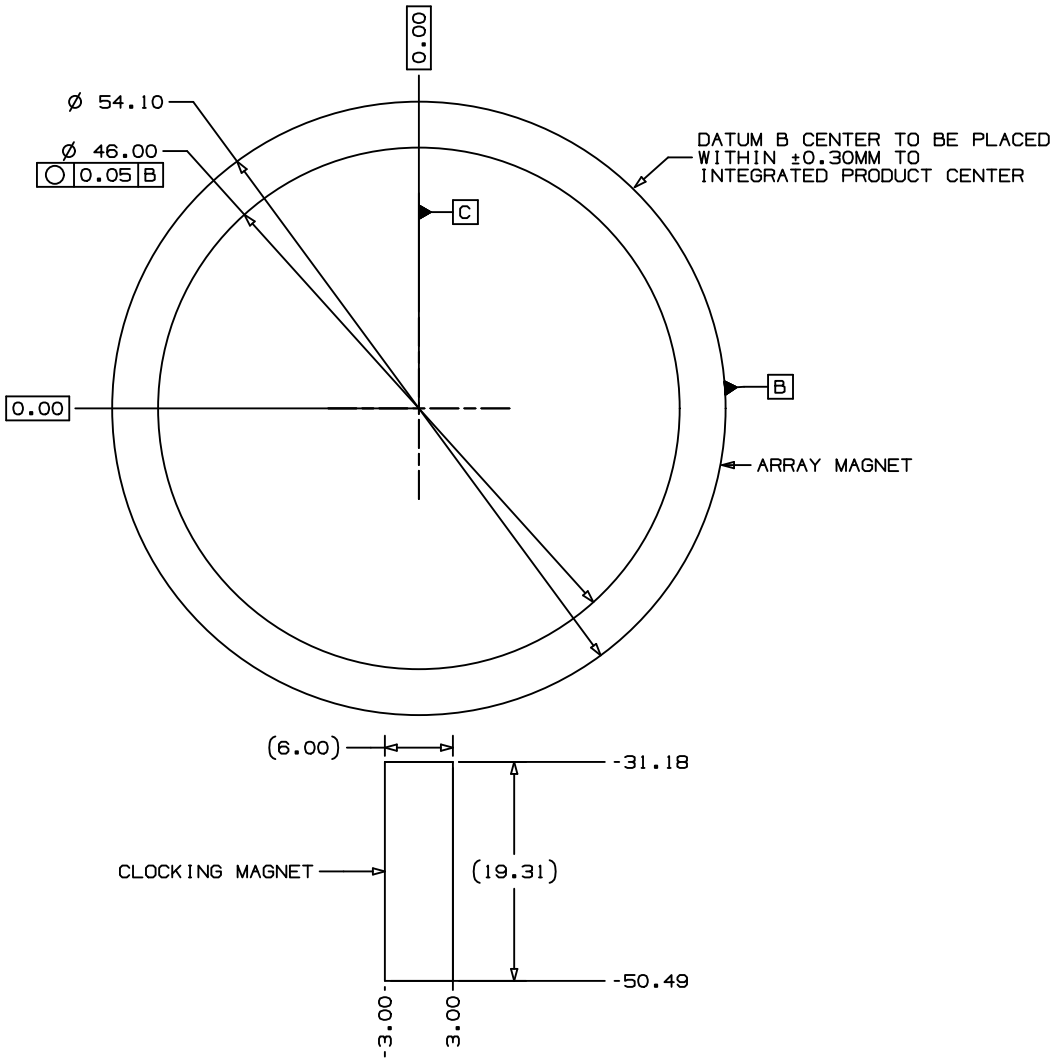

Figure 36-3 MagSafe magnet ring dimensions and polarity

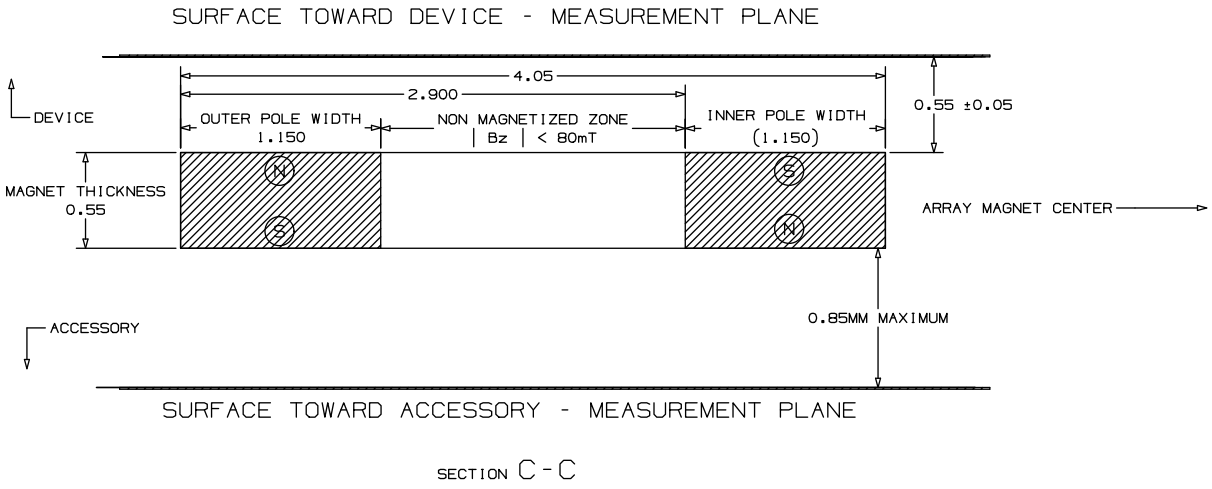

Figure 36-4 MagSafe orientation magnet dimensions and polarity

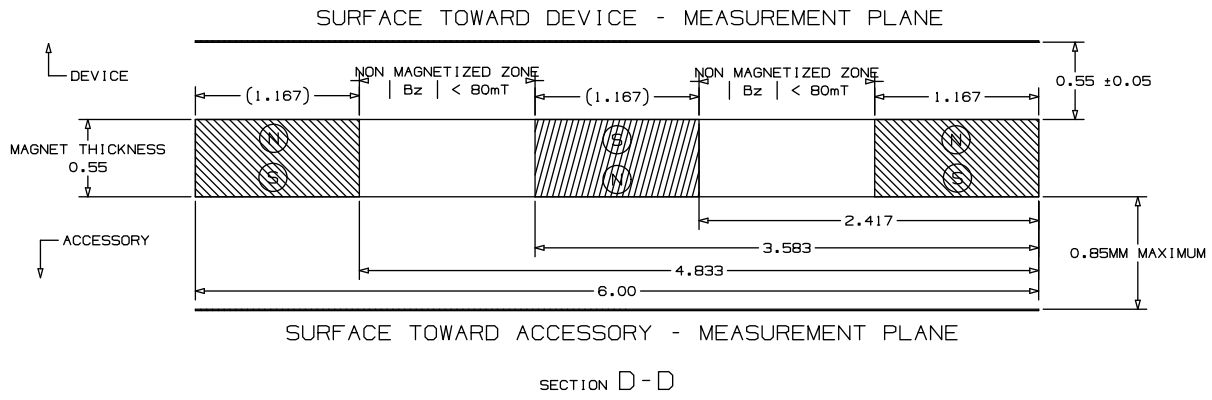

The flux density of a MagSafe case magnet ring shall comply with Table 36-2 (page 161) and Table 36-3 (page 162) across the 8 lines (S1 - S8) in Figure 36-5 (page 161).

Figure 36-5 MagSafe flux density measurement plane

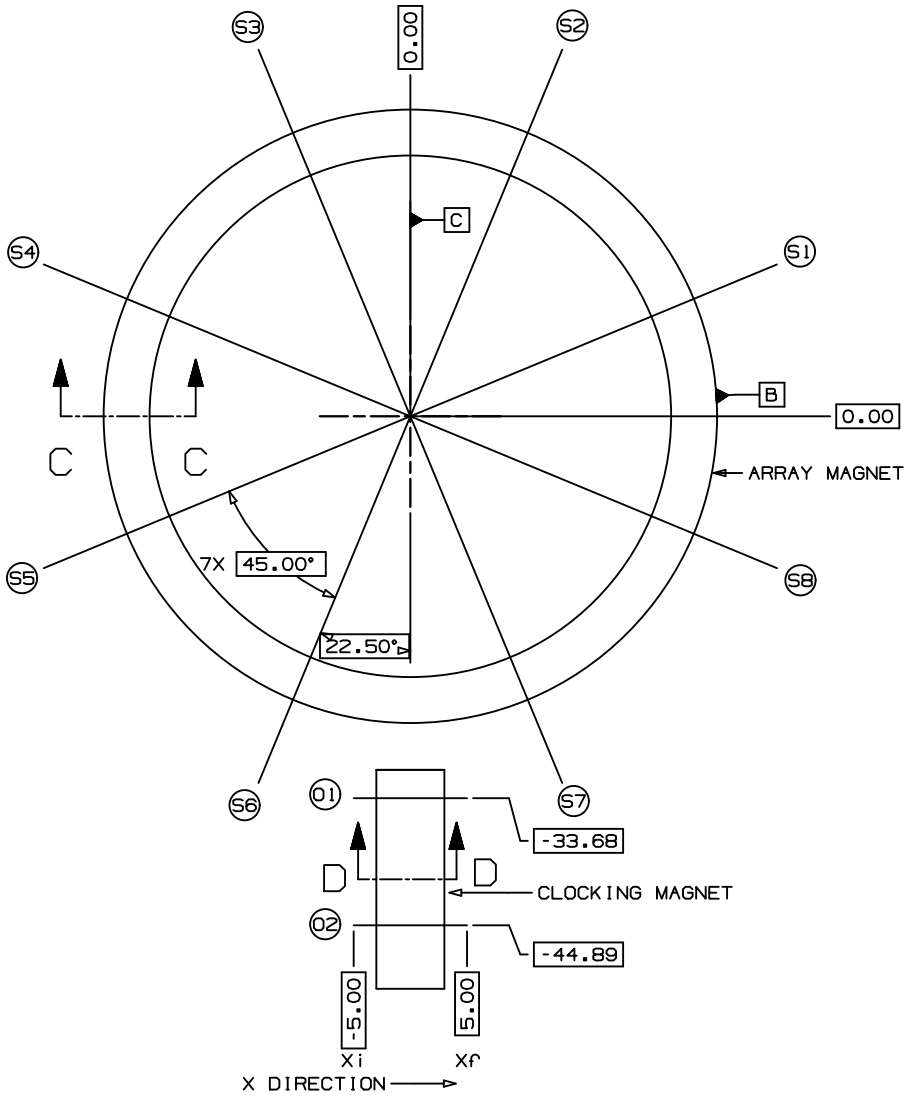

Table 36-2 Device side flux density at 0.55 mm from magnet ring surface

Minimum r	Maximum r	Minimum Bz	Maximum Bz	Minimum Bxy	Maximum Bxy
	19.5 mm	-0.020 T	0.020 T		0.025 T
19.5 mm	23 mm				0.075 T
23 mm	24 mm	-0.170 T	-0.125 T		
24 mm	26 mm			0.095 T	0.1325 T

2024-05-13 | Copyright © 2024 Apple Inc. All Rights Reserved.

Minimum r	Maximum r	Minimum Bz	Maximum Bz	Minimum Bxy	Maximum Bxy
26 mm	27 mm	0.125 T	0.170 T		
27 mm	30 mm				0.075 T
30 mm		-0.020 T	0.000 T		0.025 T

Table 36-3 Accessory side flux density at 0.80 mm from magnet ring surface

Minimum r	Maximum r	Minimum Bz	Maximum Bz	Minimum Bxy	Maximum Bxy
	19.5 mm	-0.020 T	0.020 T		0.025 T
19.5 mm	23 mm				0.065 T
23 mm	24 mm	-0.120 T	-0.085 T		
24 mm	26 mm			0.070 T	0.100 T
26 mm	27 mm	0.85 T	0.120 T		
27 mm	30 mm				0.065 T
30 mm		-0.020 T	0.000 T		0.025 T

The flux density of a MagSafe case orientation magnet shall comply with Table 36-4 (page 162) and Table 36-5 (page 163) across the 2 lines (O1 and O2) in Figure 36-5 (page 161).

Table 36-4 Device side flux density at 0.55 mm from orientation magnet surface

Minimum x	Maximum x	Minimum Bz	Maximum Bz	Minimum Bxy	Maximum Bxy
	-5.0 mm	-0.020 T	0.020 T		0.025 T
-5.0 mm	-4.5 mm	-0.020 T	0.020 T		
-4.5 mm	-2.75 mm			0.080 T	0.110 T
-2.75 mm	-2.0 mm	0.125 T	0.175 T		
-2.0 mm	-0.5 mm			0.110 T	0.155 T
-0.5 mm	0.5 mm	-0.1925 T	-0.140 T		
0.5 mm	2.0 mm			0.110 T	0.155 T
2.0 mm	2.75 mm	0.125 T	0.175 T		
2.75 mm	4.0 mm			0.080 T	0.110 T
4.0 mm	5.0 mm	-0.020 T	0.020 T		
5.0 mm		-0.020 T	0.020 T		0.025 T

2024-05-13 | Copyright © 2024 Apple Inc. All Rights Reserved.

Table 36-5 Accessory side flux density at 0.80 mm from orientation magnet surface

Minimum x	Maximum x	Minimum Bz	Maximum Bz	Minimum Bxy	Maximum Bxy
	-5.0 mm	-0.020 T	0.020 T		0.025 T
-5.0 mm	-4.5 mm	-0.020 T	0.020 T		
-4.5 mm	-2.75 mm			0.050 T	0.070 T
-2.75 mm	-2.0 mm	0.085 T	0.120 T		
-2.0 mm	-0.5 mm			0.0825 T	0.115 T
-0.5 mm	0.5 mm	-0.140 T	-0.0975 T		
0.5 mm	2.0 mm			0.0825 T	0.115 T
2.0 mm	2.75 mm	0.085 T	0.120 T		
2.75 mm	4.0 mm			0.050 T	0.070 T
4.0 mm	5.0 mm	-0.020 T	0.020 T		
5.0 mm		-0.020 T	0.020 T		0.025 T

36.1.2.3 Magnetic Force

The force normal to the back of the case needed to dislodge a MagSafe accessory, such as the Apple MagSafe Charger, shall meet the requirements in Table 36-6 (page 163).

Table 36-6 Magnetic force

Scenario	Minimum	Maximum
Case attached to device	800 gf	1100 gf
Case only	600 gf	900 gf

36.1.3 Magnetic Interference

Cases with an integrated MagSafe magnet array shall not interfere with:

- Inductive charging.
- Magnetic stripe cards in an attached iPhone Leather Wallet with MagSafe.

2024-05-13 | Copyright © 2024 Apple Inc. All Rights Reserved.

36.2 MagSafe Accessory Magnet Array

Figure 36-6 MagSafe accessory magnet array options

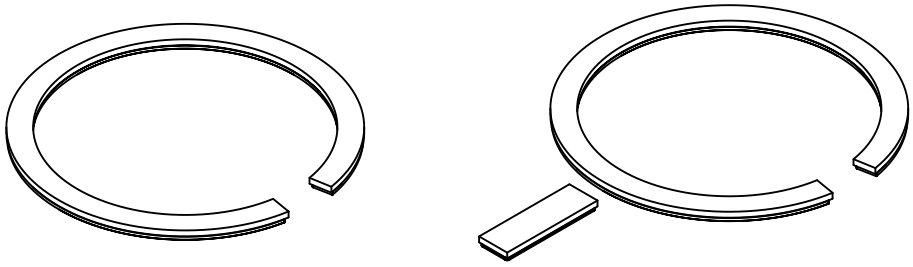

The MagSafe accessory magnet array shall be implemented as a Magnet Ring (page 166). The magnet ring enables the device and accessory to be attached in any orientation. To support a specific orientation, the accessory may include an Orientation Magnet (page 167) as part of the array.

36.2.1 Product Design

Accessories integrating the MagSafe accessory magnet array shall not enclose the device.

36.2.2 Mechanical

The accessory shall not interfere with or cause Scratches and Damage (page 26) to the device.

To avoid interference with devices, accessories shall:

- Not exceed 30 mm from the center of the magnet ring surface towards the top edge of the device for all supported device orientations. If the device can be attached in any orientation, the accessory shall not exceed 30 mm in radius around the center of the magnet ring surface.
- Maintain a clearance of 5 mm from the back of the device (mating surface) for any part of the accessory past the 30 mm keep-in constraint.
- Stay within the MagSafe Accessory Enclosure Geometry (page 171).

2024-05-13 | Copyright © 2024 Apple Inc. All Rights Reserved.

Figure 36-7 MagSafe accessory clearance

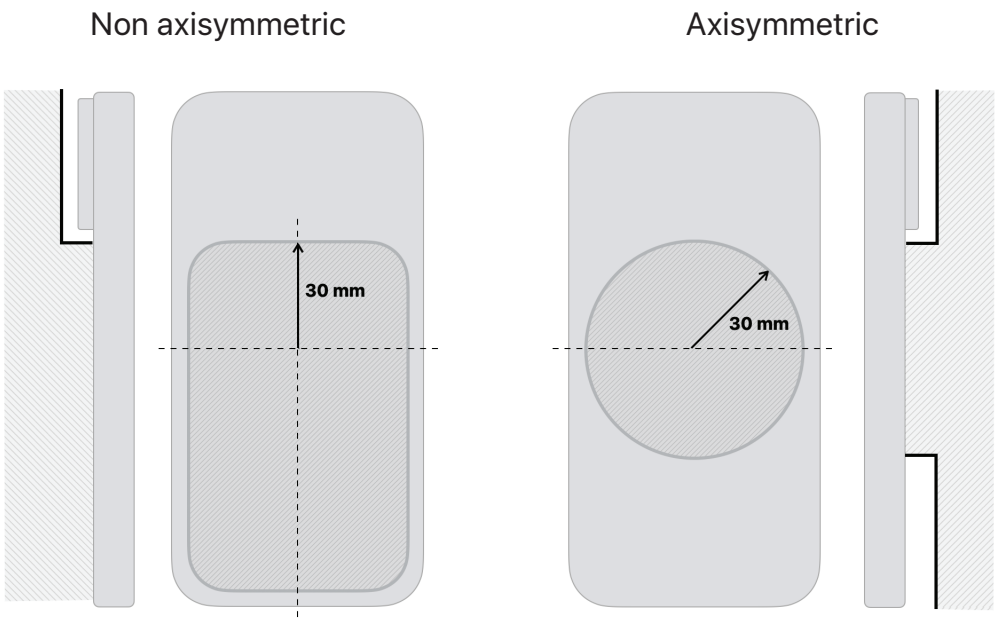

Magnets in the MagSafe accessory magnet array shall be positioned in the same plane.

The MagSafe accessory's Magnet Ring (page 166) shall magnetically self align to the device's magnet ring within a 1.55 mm radial maximum.

36.2.2.1 Magnets

MagSafe accessory magnets shall be N48H NdFeB with a 7 µm - 13 µm NiCuNi plating finish (or similar) and shall meet the requirements in Table 36-7 (page 165).

Table 36-7 Magnet properties

Property	Minimum	Maximum
Br	13.7 kGs	14.1 kGs
Hcb	13.25 kOe	
Hcj	17 kOe	
BHmax	45 MGOe	48 MGOe

Copyright © 2024 Apple Inc. All Rights Reserved.

36.2.2.2 Magnet Ring

The magnet ring shall be positioned in the accessory in compliance with the dimensions and polarity requirements in Figure 36-8 (page 166) and Figure 36-9 (page 167).

Figure 36-8 MagSafe magnet ring dimensions

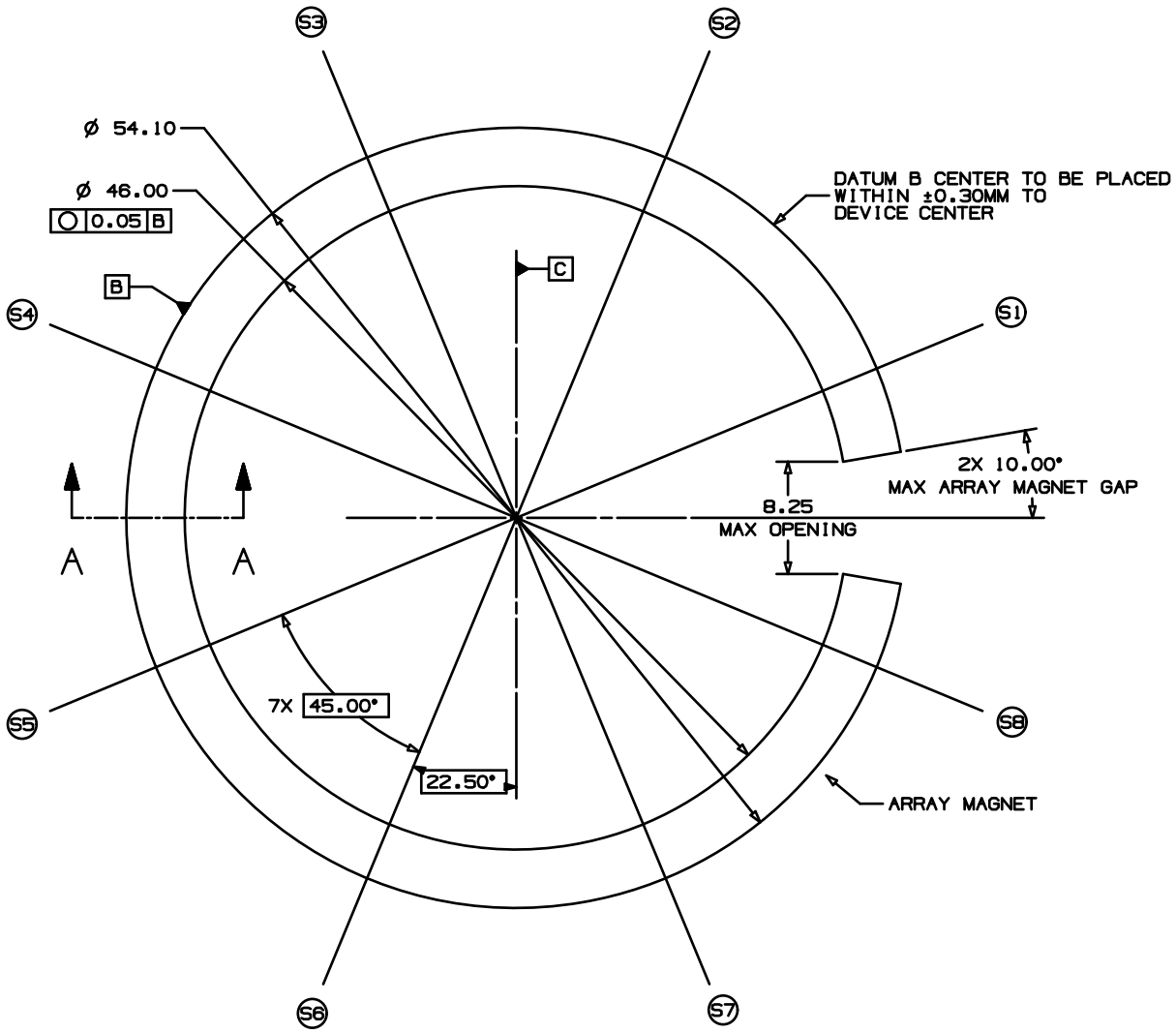

Figure 36-9 MagSafe magnet ring dimensions and polarity

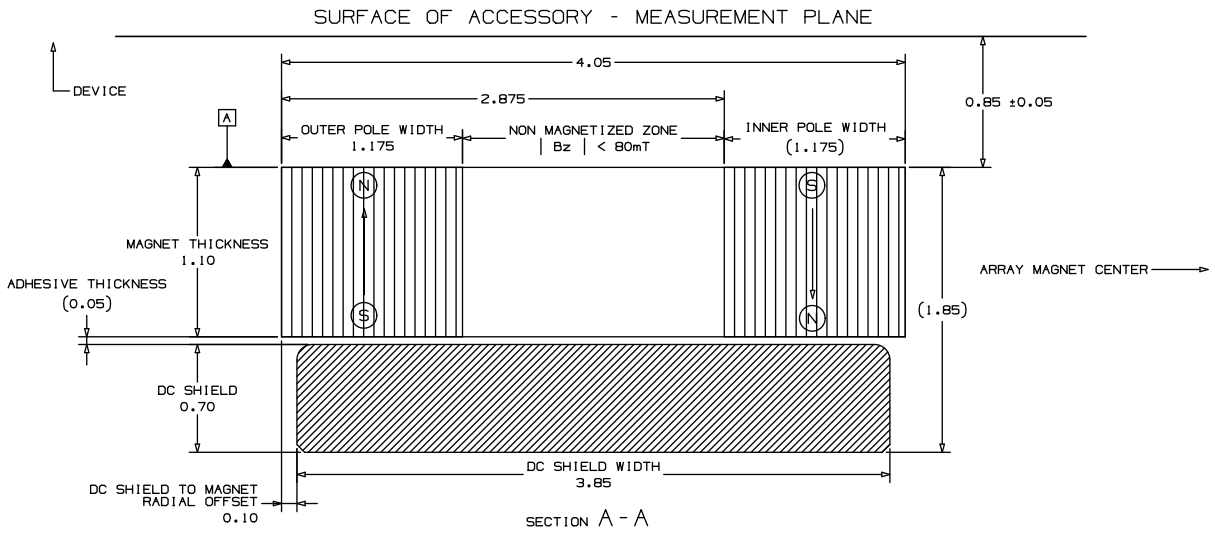

See DC Shield (page 170) for additional requirements of the DC shield specified in Figure 36-9 (page 167).

The flux density of a MagSafe accessory magnet ring shall comply with Table 36-8 (page 167) across the 8 lines (S1 - S8) in Figure 36-8 (page 166).

Table 36-8 Flux density at 0.85 mm from magnet ring surface

Minimum r	Maximum r	Minimum Bz	Maximum Bz	Minimum Bxy	Maximum Bxy
0 mm	19.5 mm	-0.025 T	0.025 T		0.025 T
19.5 mm	23 mm				0.075 T
23 mm	24.5 mm	-0.215 T	-0.155 T		
24.5 mm	25.5 mm			0.170 T	0.215 T
25.5 mm	27 mm	0.155 T	0.215 T		
27 mm	30 mm				0.075 T
30 mm		-0.025 T	0.025 T		0.025 T

36.2.2.3 Orientation Magnet

If orientation magnets are included, the magnets shall be positioned according to Figure 36-10 (page 168) and Figure 36-11 (page 169).

2024-05-13 | Copyright © 2024 Apple Inc. All Rights Reserved.

Figure 36-10 MagSafe orientation magnet dimensions

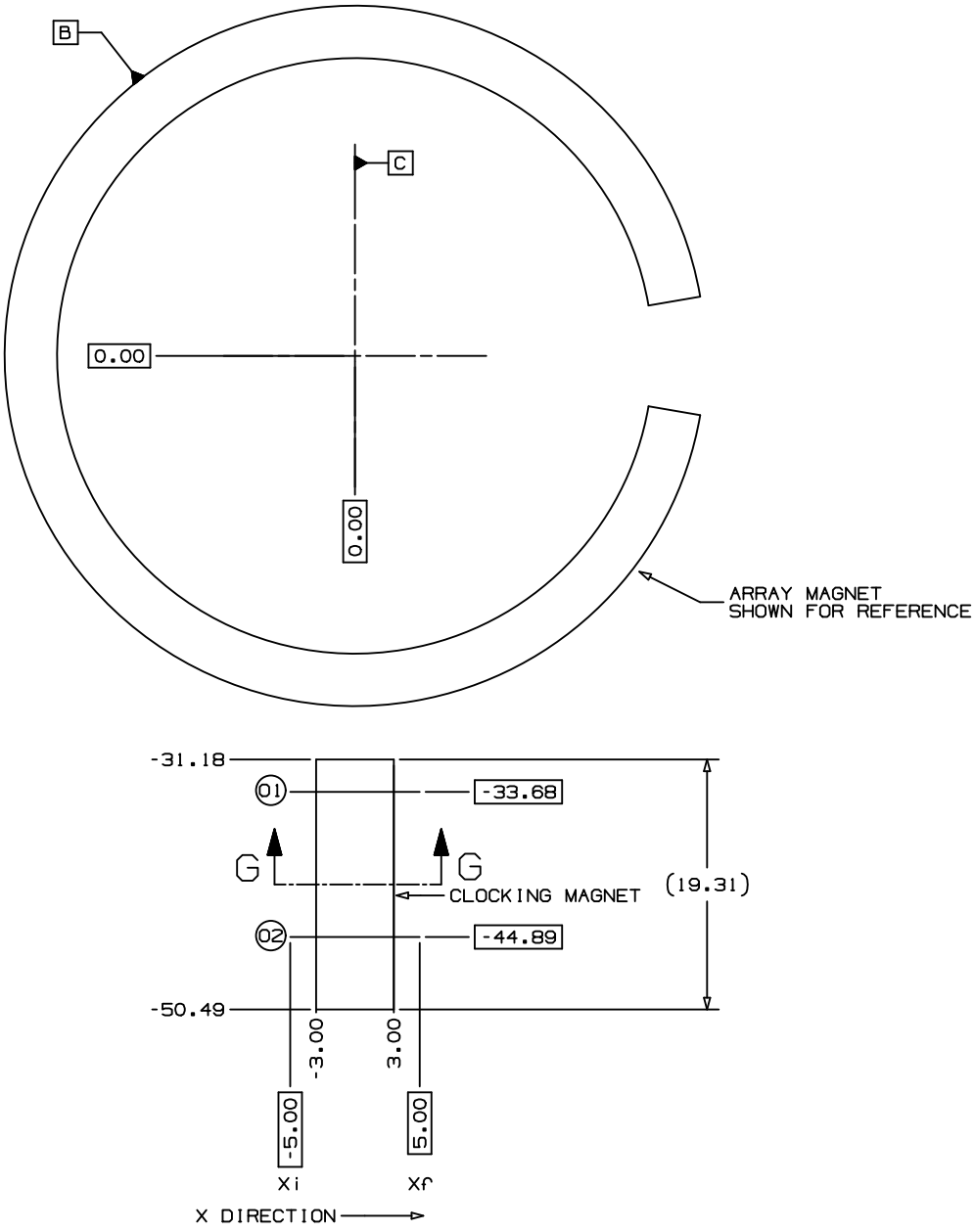

2024-05-13 | Copyright © 2024 Apple Inc. All Rights Reserved.

Figure 36-11 MagSafe orientation magnet dimensions and polarity

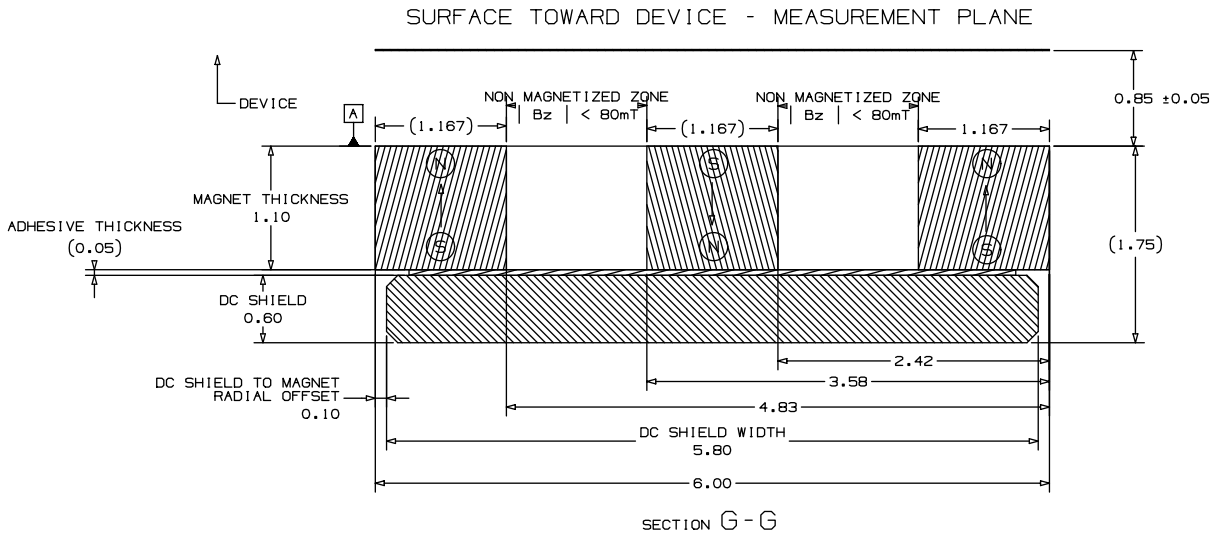

See DC Shield (page 170) for additional requirements of the DC shield specified in Figure 36-11 (page 169).

The flux density of a MagSafe accessory orientation magnet shall comply with Table 36-9 (page 169) across the 2 lines (O1 and O2) in Figure 36-10 (page 168).

Table 36-9 Flux density at 0.85 mm from orientation magnet surface

Minimum x	Maximum x	Minimum Bz	Maximum Bz	Minimum Bxy	Maximum Bxy
	-5.0 mm	-0.025 T	0.025 T		0.025 T
-5.0 mm	-4.5 mm	-0.025 T	0.025 T		
-4.5 mm	-3.0 mm			0.0625 T	0.0875 T
-3.0 mm	-2.0 mm	0.145 T	0.195 T		
-2.0 mm	-0.5 mm			0.165 T	0.215 T
-0.5 mm	0.5 mm	-0.250 T	-0.185 T		
0.5 mm	2.0 mm			0.165 T	0.215 T
2.0 mm	3.0 mm	0.145 T	0.195 T		
3.0 mm	4.0 mm			0.0625 T	0.0875 T
4.0 mm	5.0 mm	-0.025 T	0.025 T		
5.0 mm		-0.025 T	0.025 T		0.025 T

2024-05-13 | Copyright © 2024 Apple Inc. All Rights Reserved.

36.2.2.4 Magnetic Force

The force normal to the back of the device needed to dislodge the MagSafe accessory shall meet the requirements in Table 36-10 (page 170).

Table 36-10 Magnetic force

Scenario	Minimum	Maximum
Accessory attached to device	650 gf	900 gf

36.2.2.5 DC Shield

The DC shield shall be low carbon steel (1010, DT4 or similar), per ASTM848, with a 5 µm - 10 µm Ni plating finish or similar.

The DC shield shall have a saturation flux density (B_{sat}) of at least 2.0 T.

2024-05-13 | Copyright © 2024 Apple Inc. All Rights Reserved.

36.3 MagSafe Accessory Enclosure Geometry

REV	ECO#	DESCRIPTION OF REVISION

NOTES: (UNLESS OTHERWISE SPECIFIED)

1. SPLINE REPRESENTS MAX MATERIAL CONDITION FOR AN EXTERIOR PRODUCT SURFACE. MAGSAFE COMPATIBLE ACCESSORIES SHALL STAY WITHIN THE PROVIDED SPLINE.
2. FOR NON AXISYMMETRIC APPLICATIONS, SPLINE REPRESENTS MAX MATERIAL CONDITION WHEN VIEWED ALONG X AXIS
3. FOR AXISYMMETRIC APPLICATIONS, A REVOLUTION OF THE SPLINE AROUND THE Z AXIS THROUGH THE CENTER POINT OF THE MAGNET ARRAY REPRESENTS THE MAX MATERIAL CONDITION

[4] ANY CURVATURE DEVIATING BEYOND SPLINE TO EXIST BEYOND 5MM Z CLEARANCE FROM TOP OF PRODUCT

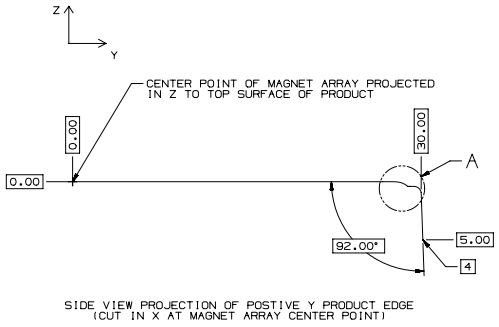

SIDE VIEW PROJECTION OF POSTIVE Y PRODUCT EDGE
(CUT IN X AT MAGNET ARRAY CENTER POINT)

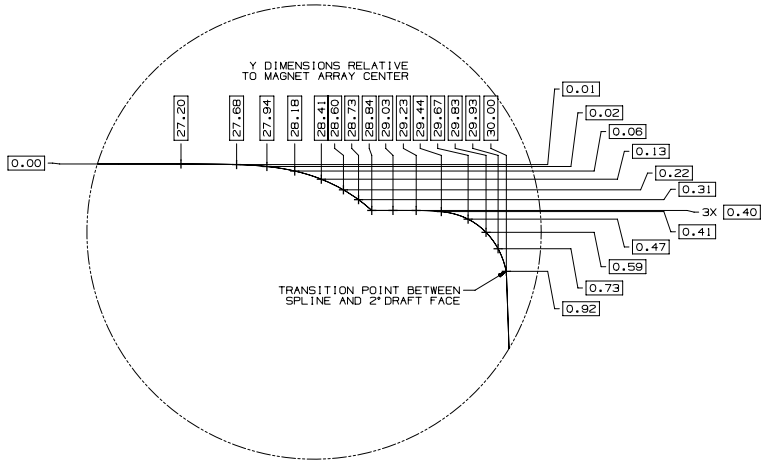

DETAIL A
SCALE 50:1

METRIC	Apple Inc.
DRAFTER: APPLE — DATE	NOTICE OF PROPRIETARY PROPERTY: THE INFORMATION CONTAINED HEREIN IS THE PROPRIETARY PROPERTY OF APPLE INC. THE POSSESSOR AGREES TO THE FOLLOWING: (i) TO MAINTAIN THIS DOCUMENT IN CONFIDENCE (ii) NOT TO REPRODUCE OR COPY IT (iii) NOT TO REVEAL OR PUBLISH IT IN WHOLE OR PART (iv) ALL RIGHTS RESERVED
DESIGNER: APPLE — DATE	
DIMENSIONS ARE IN MILLIMETERS TOLERANCES	TITLE: MAGSAFE COMPATIBLE ENCLOSURE GEOMETRY
DO NOT SCALE DRAWINGS	DRAWING NUMBER — REV. 01
THIRD ANGLE PROJECTION — SIZE D — SCALE NONE — SHT 1 OF 1	

NX GENERATED

Copyright © 2024 Apple Inc. All Rights Reserved.

36.4 Test Procedures

36.4.1 MagSafe Case Magnet Array

36.4.1.1 Case Thickness

36.4.1.1.1 Equipment

- Digital thickness gauge, such as the Mitutoyo 547-520S.

36.4.1.1.2 Procedure

1. Using the digital thickness gauge, verify the thickness is less than or equal to 2.1 mm at:
   - Four points along the magnet ring.
   - Two points along the orientation magnet.

36.4.1.2 Accessory Clearance

36.4.1.2.1 Equipment

- MagSafe-capable device.
- Apple MagSafe Battery Pack.

36.4.1.2.2 Procedure

1. Attach the case to the device.
2. Attach the Apple MagSafe Battery Pack to the back of the case.
3. Verify the case does not interfere with the Apple MagSafe Battery Pack and only the mating surface is in contact.

36.4.1.3 Magnetic Force

36.4.1.3.1 Equipment

- MagSafe-capable device.
- Apple MagSafe Charger.
- Non-magnetic eyelet screw.
- Digital force gauge capable of capturing peak values, such as the Chatillon DFX II.
- Hook attachment for digital force gauge.
- Clamps to securely hold the device on a flat level surface.

2024-05-13 | Copyright © 2024 Apple Inc. All Rights Reserved.

36.4.1.3.2 Test Setup

Figure 36-12 Magnetic force test setup

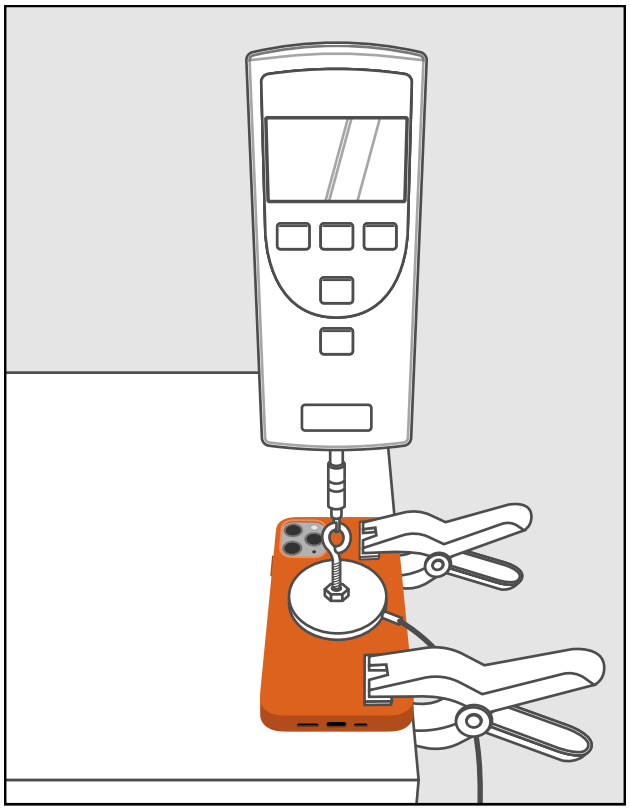

1. Attach the case to the device.
2. Place the device on a flat level surface with the display facing down and clamp it firmly in place.
3. Glue the non-magnetic eyelet to the center of the back of the Apple MagSafe Charger so pulling on the eyelet exerts a force on the center of the charger.

36.4.1.3.3 Procedure

1. Repeat the following steps 5 times:
   a. Attach the Apple MagSafe Charger and eyelet assembly to the back of the case, allowing them to magnetically align.
   b. Connect the force gauge hook to the eyelet.
   c. Reset the force gauge's peak force value.
   d. Pull the force gauge vertically until the Apple MagSafe Charger and eyelet assembly dislodge from the case.
   e. Note the peak value from the force gauge.

2024-05-13 | Copyright © 2024 Apple Inc. All Rights Reserved.

2. Calculate the average of the 5 peak force measurements.
3. Verify the average force is within the range of 800 gf to 1100 gf when removing the mass of the Apple MagSafe Charger and eyelet assembly.

36.4.1.4 iPhone Leather Wallet with MagSafe Detection

36.4.1.4.1 Equipment

- MagSafe-capable device.
- iPhone Leather Wallet with MagSafe.

36.4.1.4.2 Procedure

1. Attach the case to the device.
2. Attach the wallet to the back of the case.
3. Verify the device displays the wallet animation.

36.4.1.5 Magnetic Stripe Cards in iPhone Leather Wallet with MagSafe

36.4.1.5.1 Equipment

- MagSafe-capable device.
- iPhone Leather Wallet with MagSafe.
- Low Coercivity Magnetic stripe (LoCo) cards, such as cards from the following vendors:
  - American Card Service.
  - Allsafe.
  - CI Solutions.
  - PSA.
- LoCo card reader/writer, such as:
  - Q-card Mag3x.
  - Magtek InSpec 9000.
  - Misiri X6BT.
  - Deftun MSR605X.

36.4.1.5.2 Procedure

1. Attach the accessory to the device.
2. Repeat this procedure for three different brands of LoCo cards:
   a. Write to the LoCo card.
   b. Read from the LoCo card and verify it was written successfully.
   c. Insert the LoCo card into the wallet with the magnetic stripe facing the magnets.

2024-05-13 | Copyright © 2024 Apple Inc. All Rights Reserved.

d. Place additional cards into the wallet to ensure a LoCo card is in contact with the magnetic side of the wallet.
e. Attach the wallet to the accessory (attached to the device).
f. Wait 10 seconds.
g. Remove the wallet from the accessory.
h. Remove the LoCo card from the wallet.
i. Verify the LoCo card is readable and its contents have not changed.

36.4.2 MagSafe Accessory Magnet Array

36.4.2.1 Orientation Magnet

If the accessory includes an orientation magnet:

1. Use a straight edge to verify the device contact surfaces of the magnet ring and orientation magnet are coplanar (aligned in the same plane).
2. Attach a MagSafe-capable device to the accessory and align it with the orientation magnet. Verify there are no gaps between the:
   - MagSafe magnet ring and device.
   - MagSafe orientation magnet and device.

36.4.2.2 Magnetic Force

36.4.2.2.1 Equipment

- MagSafe-capable device.
- Non-magnetic eyelet to attach to the device.
- Digital force gauge capable of capturing peak values, such as the Chatillon DFX II.
- Hook attachment for digital force gauge.
- Clamps, or a vice, to securely hold the accessory on a flat level surface.

2024-05-13 | Copyright © 2024 Apple Inc. All Rights Reserved.

36.4.2.2.2 Test Setup

Figure 36-13 Magnetic force test setup

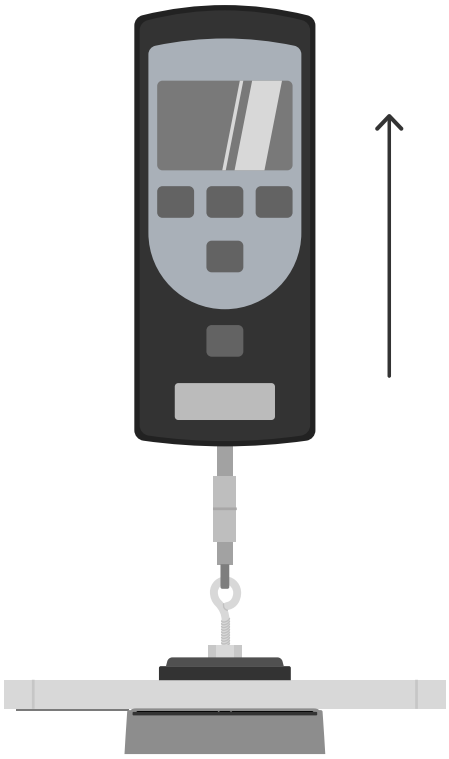

1. Clamp the accessory in place so the MagSafe surface is level.
2. Attach the non-magnetic eyelet to the MagSafe-capable device so pulling on the eyelet exerts a force on the center of the back of the device. A bracket, strong suction cup, or glue may be used.

36.4.2.2.3 Procedure

1. Repeat the following steps 5 times:
   a. Attach the device and eyelet assembly to the accessory, allowing them to magnetically align.
   b. Connect the force gauge hook to the eyelet.
   c. Reset the force gauge's peak force value.
   d. Pull the force gauge vertically until the device and eyelet assembly dislodge from the accessory.
   e. Note the peak value from the force gauge.
2. Calculate the average of the 5 peak force measurements.
3. Verify the average force is within the range of 650 gf to 900 gf when removing the mass of the device and eyelet assembly.

2024-05-13 | Copyright © 2024 Apple Inc. All Rights Reserved.

37. Media Library Access

The Media Library feature allows accessories to download the metadata contents of a device's media libraries (not the media items themselves) and request playback of media items. The feature is divided into the following sub-features:

- Media Library Information informs the accessory about media libraries available on the device.
- Media Library Updates provide an accessory with an updated view of the contents of a particular media library.
- Media Library Playback allows the accessory to request playback of one or more items from a media library.

See the Accessory Interface Specification (page 24) for more information.

2024-05-13 | Copyright © 2024 Apple Inc. All Rights Reserved.

38. Musical Instrument Digital Interface (MIDI)

Compatible USB and Bluetooth Low Energy MIDI accessories can interface directly with iOS 17.0, iPadOS 17.0, and macOS 14.0 Sonoma apps making use of the Core MIDI framework, see https://developer.apple.com/documentation/coremidi.

38.1 Requirements

Accessories supporting MIDI as a USB device shall implement a MIDI Streaming IN endpoint and shall support either of the following:

- *USB Device Class Definition for MIDI Devices, Version 2.0*, see https://www.usb.org/document-library/usb-class-definition-midi-devices-v20.
- *USB Device Class Definition for MIDI Devices, Release 1.0*, see https://www.usb.org/document-library/usb-midi-devices-10.

Accessories supporting MIDI over Bluetooth Low Energy shall support the following:

- *MIDI Association MIDI over Bluetooth Low Energy (BLE-MIDI), Version 1.0a*, see https://midi.org/midi-over-bluetooth-low-energy-ble-midi.

38.2 Test Procedures

Developers should test accessory designs against macOS 14.5 Sonoma using the Audio MIDI Setup app and its MIDI Studio and Test MIDI Setup features. See the user guide at https://support.apple.com/guide/audio-midi-setup/welcome/mac.

2024-05-13 | Copyright © 2024 Apple Inc. All Rights Reserved.

39. Now Playing Updates

The Now Playing feature enables an accessory to display information about the current "Now Playing" media source and media item on a device. Media sources include both the built-in Apple Music and Apple Video apps on devices and certain third-party iOS apps supporting the generation of Now Playing metadata, see *MPNowPlayingInfoCenter* in the iOS SDK documentation. Accessories shall be prepared for the Now Playing media source and media item to change at any time, whether the accessory requested the change or not.

See the Accessory Interface Specification (page 24) for more information.

2024-05-13 | Copyright © 2024 Apple Inc. All Rights Reserved.

40. Out-of-Band Bluetooth Pairing

Accessories with the ability to connect to a device using Bluetooth and a wired transport should use the Out-of-Band Bluetooth Pairing feature to simplify Bluetooth connection setup.

For example, USB to Lightning charge cables or Lightning to USB accessory cables can be used to exchange Bluetooth pairing information upon initial connection. This may reduce or eliminate the need for instruction manuals to describe how to:

- Put the accessory into a discoverable and pairable mode.
- Initiate Bluetooth pairing on the device using the Settings app.
- Download the accessory's companion app and initiate pairing from the app.

See the Accessory Interface Specification (page 24) for more information.

2024-05-13 | Copyright © 2024 Apple Inc. All Rights Reserved.

41. Siri

Siri enables a user to have rich interactions with a device by primarily using their voice.

Accessories supporting Siri shall not use an icon resembling the Siri microphone icon.

The rest of this chapter is applicable to accessories supporting Siri over Bluetooth using HFP commands.

To support Siri using other transports and protocols, the accessory developer shall be a member of the Apple MFi Licensing Program (page 24).

41.1 Enabling Custom Siri Commands

Accessories supporting Siri over Bluetooth using HFP commands shall support HFP Command AT+XAPL (page 135). The device will use the information sent by this command to enable and disable custom commands related to Siri.

To receive Siri status events, the accessory shall send the AT+XAPL command after making a successful HFP Service Level Connection (SLC) to the device. The accessory should send an AT+XAPL command first, before sending any of the additional Siri-specific commands described below.

41.2 Obtaining Siri Availability Information

After establishing an HFP profile connection, an accessory can determine if Siri is available and enabled on a device. It can also receive notifications of changes in Siri status. If Siri is disabled, Voice Control will be activated instead.

41.2.1 Obtaining Status Information at Connection

The accessory should send the following command after making a successful HFP profile (SLC) connection and sending an AT+XAPL command.

41.2.1.1 HFP Command AT+APLSIRI?

Description: AT command to retrieve Siri status information.

2024-05-13 | Copyright © 2024 Apple Inc. All Rights Reserved.

Initiator: Accessory

Format: `AT+APLSIRI?`

Response: `+APLSIRI:` *value*

Defined Values:
- 0 = Siri is not available on this platform.
- 1 = Siri is available and enabled.
- 2 = Siri is available but not enabled.

Example: `+APLSIRI:1` (Siri is available and enabled)

41.2.2 Receiving Siri Availability Updates from the Device

After initialization has been completed, the device will send the accessory the following notification if there is a change in Siri status. This notification will be provided only if the accessory has requested Siri status (by sending `AT+APLSIRI?`) at least once after connection and if the device has reported Siri is available and enabled.

41.2.2.1 HFP Command +APLSIRI

Description: Unsolicited event indicating a change in Siri status.

Initiator: Device

Format: `+APLSIRI:` *value*

Defined Values:
- 1 = Siri is available and enabled.
- 2 = Siri is available but not enabled.

Example: `+APLSIRI:2` (Siri is available but not enabled)

2024-05-13 | Copyright © 2024 Apple Inc. All Rights Reserved.

Figure 41-1 Siri is Disabled/Enabled from the Device's Settings

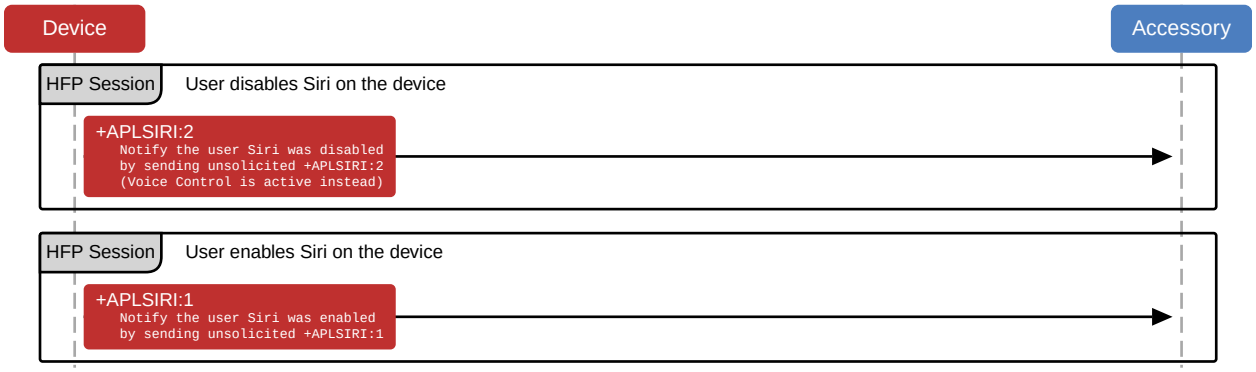

41.3 Initiating a Siri Session

Once support for Siri is established on both the accessory and the device, a Siri session can be started from either one.

41.3.1 Initiating a Session from the Accessory

The accessory should only initiate a Siri session as a result of a direct user action.

The accessory shall use the voice recognition command AT+BVRA defined in the Bluetooth *Hands-Free Profile* specification (*Hands-Free Profile* 1.6 profile specification, section 4.25) to initiate a Siri session.

The HFP profile shall be connected and SLC shall exist.

The accessory should use the following command sequence:

- The accessory sends an AT+BVRA=1 command to the device.
- The device sends an OK response.
- The device activates a Siri session and creates a Synchronous Connection (SCO) for the audio.
- If the Siri session is not finished, the accessory shall send AT+BVRA=1 to continue the conversation. This may need to happen multiple times.
- When the Siri session is finished, the device sends a +BVRA:0 result code to the accessory.
- The device disconnects the SCO connection.

While a Siri session is active, the accessory shall let the user continue the conversation and ask follow up questions within the current context. In order to do so, the accessory shall be able to send an AT+BVRA=1 command to the device even after Siri has been already activated and before +BVRA:0

2024-05-13 | Copyright © 2024 Apple Inc. All Rights Reserved.

is received. Figure 41-2 (page 184) shows an overview of the interaction when Siri is triggered from the accessory, the running session was continued twice and once Siri was finished, the device dismissed the session.

Figure 41-2 Initiating a Siri Session from the Accessory

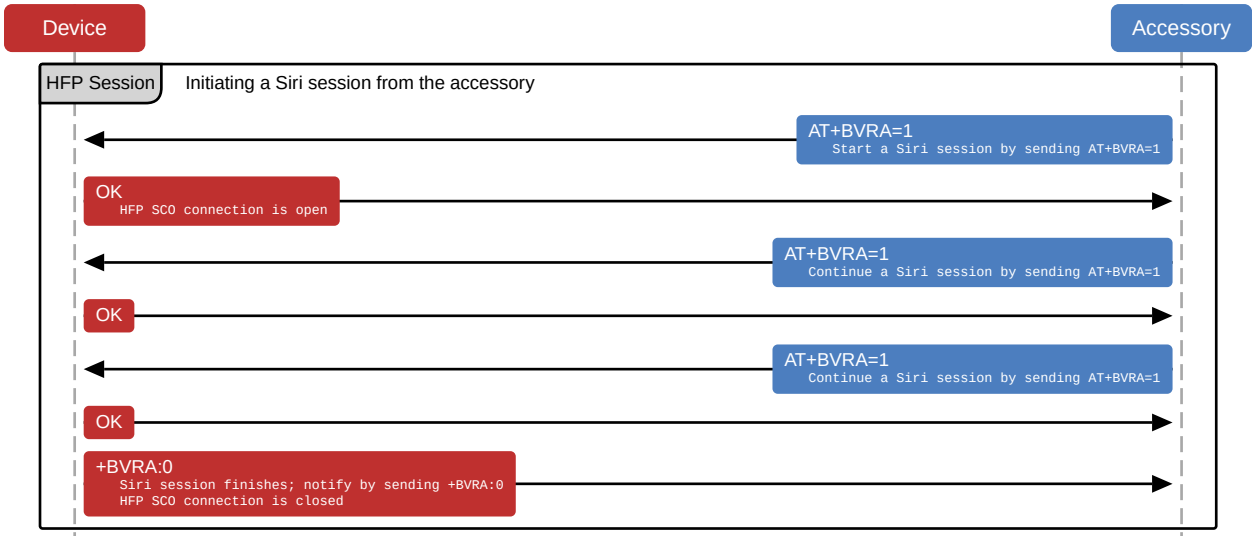

41.3.2 Initiating a Session from the Device

If the accessory supports voice recognition commands, the device sends a +BVRA event to indicate the start of a Siri session. The accessory shall enable support for voice recognition and indicate it in its feature response as described in the Bluetooth *Hands-Free Profile* 1.6 specification, section 4.34.1, "Bluetooth Defined AT Capabilities." Specifically, the HFP profile shall be connected, SLC shall exist, and voice recognition activation (bit 3) shall be enabled in the AT+BRSF command. The device will not use virtual call functionality for the Siri session if voice recognition activation is supported by the accessory.

The accessory should expect the following command sequence:

- The device sends a +BVRA`:1` event to the accessory.
- The device activates a Siri session and creates a SCO connection for the audio.
- When the Siri session is finished, the device sends a +BVRA`:0` result code to the accessory.
- The device disconnects the SCO connection.

2024-05-13 | Copyright © 2024 Apple Inc. All Rights Reserved.

Figure 41-3 Initiating a Siri Session from the Device

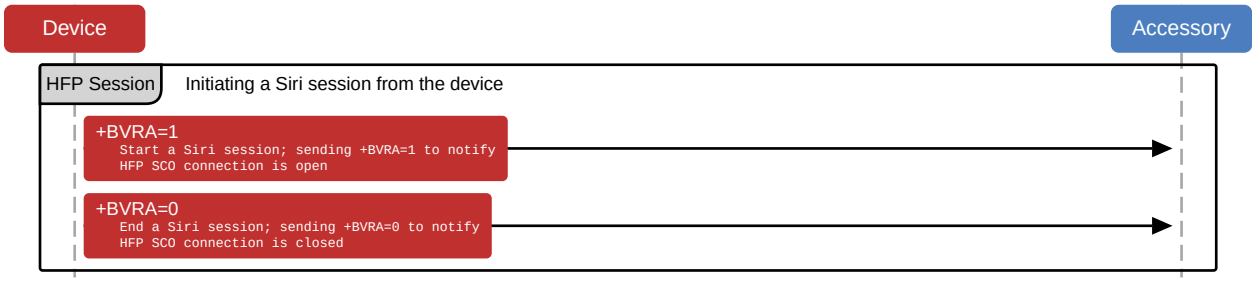

41.3.3 Ending a Session from the Accessory

Once a Siri session is running the accessory shall be capable of ending the session by sending an AT+BVRA=0 command to the device. Figure 41-4 (page 185) shows an example of ending a running Siri session from the accessory. The accessory should only end an active session as a result of a direct user action.

Figure 41-4 Ending a Siri Session from the Accessory

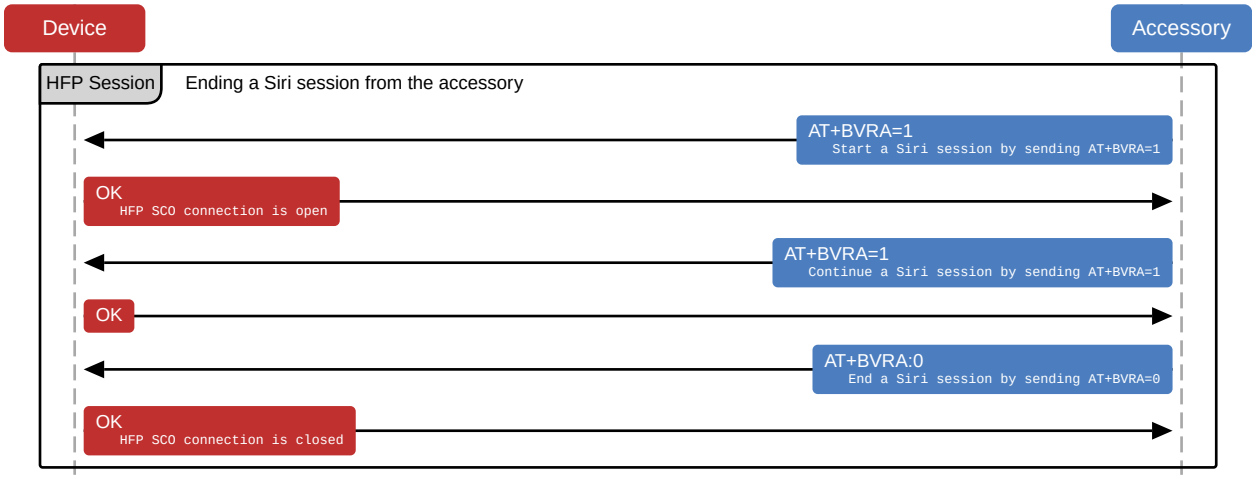

41.4 Siri Eyes Free Mode

Siri Eyes Free mode is a feature to control Siri responses including display information and can be enabled or disabled as needed. In Siri Eyes Free mode, the user experience is tailored towards a driving scenario and interactions with Siri are done primarily using voice to minimize the need for the user to

2024-05-13 | Copyright © 2024 Apple Inc. All Rights Reserved.

look at a screen. Siri Eyes Free mode is supported only for Bluetooth-enabled vehicle entertainment systems and should not be used by any other accessories. Siri Eyes Free should not be triggered using a voice command.

The device will listen for the HFP AT command `AT+APLEFM` to enable or disable Siri Eyes Free mode.

This command is used by the device to modify Siri responses containing visual information or requiring user interaction. Suitable audio feedback and voice commands will be available to the user based on the initiated Siri use case.

Siri Eyes Free mode is disabled by default. Once the accessory has enabled Siri Eyes Free mode, it remains enabled for all subsequent Siri sessions initiated from the accessory until the accessory disables it or the Bluetooth connection is disconnected.

41.4.1 HFP Command AT+APLEFM

Description: An accessory sends this command to notify a device of the preferred state of Siri Eyes Free mode.

Initiator: Accessory

Format: `AT+APLEFM=`*value*

Response: `OK`

Defined Values:

- `0x00` = Disable Siri Eyes Free mode.
- `0x01` = Enable Siri Eyes Free mode.
- `0x02-0xFF` = reserved

Example: `AT+APLEFM=1`

41.5 Improving Voice Recognition

The microphone audio an accessory sends to the device during a Siri session should be suitable for voice recognition. Audio requirements for optimal voice recognition may differ from requirements for optimal human perception (for example, during a cellular phone call).

Filtering of the audio signal to remove echoes or feedback noise is acceptable.

To provide the best possible audio quality as Siri input, the accessory shall observe the following recommendations:

2024-05-13 | Copyright © 2024 Apple Inc. All Rights Reserved.

- **Echo cancellation and noise suppression (EC/NR)**: Directional microphones and linear beamforming with microphone arrays giving improved SNR are recommended. Linear echo cancellation for reducing unwanted audio sources (such as audio output from the system) without having any other effect on the speech signal are also recommended. However, single channel noise reduction methods (such as spectrum subtraction) shall not be applied, as they will be detrimental to the speech recognition accuracy. Similarly, automatic gain control, residual echo suppression and attempts to blank out non-speech periods in the waveform shall not be applied.
- **Signal gain**: When adjusting signal levels, the accessory shall avoid artifacts, dropouts, and clipping in all circumstances. Automatic Gain Control is not recommended. If the accessory adjusts signal gain, the gain should be held constant across each spoken utterance. The nominal level measured at the uplink output of the accessory should be A-weighted -30 dB ±2 dB root-mean-square (RMS), expressed in units relative to full-scale (dBFS(A)). Alternatively, the nominal level may be 13 dB ±2 dB SLR if using the ITU measurement procedure.
- **Signal-to-noise ratio (SNR)**: The average SNR should be greater than 20 dB. Below 20 dB, recognition rates will be impacted.
- **Reverberation**: An RT60 time less than 200 ms should be maintained.

41.5.1 Wide Band Speech Support

An accessory using Siri should support 16 kHz wide band speech audio for better audio quality and voice recognition performance. See the Bluetooth *Hands-Free Profile* 1.6 specification for details about wide band speech audio. Narrow band audio signal (8 kHz) is supported but not recommended.

41.6 Optimizing the Siri Experience

The start of a Siri session should not be accompanied by local beeps or verbal indications (such as an announcement of "...voice dialing...") from the accessory. When a Siri session becomes active, the device sends two beeps indicating Siri is ready to receive instructions. Adding extra audible notifications only inserts delays in the system.

The accessory should wait for the device to end each Siri session.

The accessory should not send an `AT+BVRA=0` command unless it is prompted to do so by user interaction.

The accessory should be capable of rendering audio within 200 ms of SCO connection activation to ensure the user always hears the Siri introductory beeps.

2024-05-13 | Copyright © 2024 Apple Inc. All Rights Reserved.

41.7 Common Siri Applications

Siri can send messages, find points of interests, place phone calls, and much more. As Siri capabilities are constantly growing, additional use cases may become available after the initial integration. In Siri Eyes Free mode, some of these use cases may not be accessible as the user experience is tailored towards a driving scenario.

41.7.1 Initialization Procedure After Connection is Established

Figure 41-5 (page 188) outlines the sequence the accessory has to trigger to be able to use Siri on a device. After establishing an HFP profile connection, the accessory shall first enable the custom Siri commands by sending AT+XAPL and provide the features it supports. After a confirmation is received from the device, the accessory should determine Siri's availability with AT+APLSIRI?.

Vehicles with Bluetooth-enabled infotainment systems can also enable Siri Eyes Free Mode during initialization. This is detailed in Figure 41-6 (page 189).

Figure 41-5 Siri Initialization Procedure

Figure 41-6 Siri Initialization Procedure with Siri Eyes Free

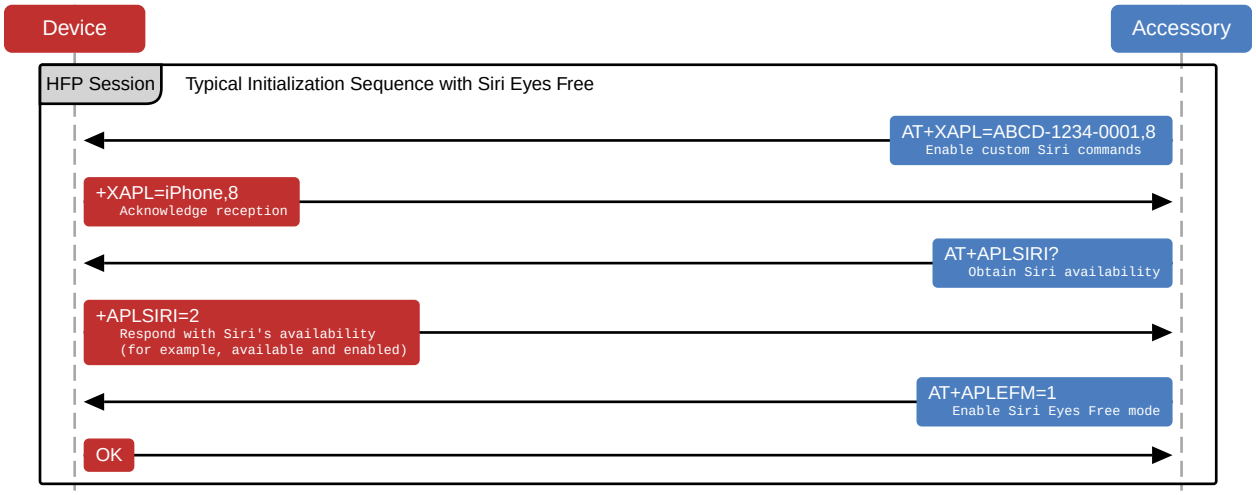

41.7.2 Phone Dialing Using Siri

Upon user request, Siri can initiate an outgoing phone call. The device will initiate HFP call signaling to establish a phone call as described in Bluetooth (page 215). The accessory shall be able to transition to Hands-Free dialing at any time during or after a Siri session when signaled by the device.

41.7.3 Audio Routing and Media Playback Using Siri

Siri can control the media playback on a device, and if Siri determines the user wants to play or pause music, Siri will either start, pause or resume media playback. The device will send a notification to the accessory indicating a change in playback state and any associated track information. The accessory shall respond to the notifications, start or stop the music playback as requested, as well as update the correct playback state (for example, shuffle, repeat).

The accessory shall not force a change in the playback state after a Siri session is ended. If music was playing before Siri was started, it shall continue playing, if it was paused, it shall remain paused.

After Siri starts music playback the accessory shall set its current audio route to match the audio source, depending on how audio is being received from the device (using Bluetooth or by a wired connection).

The available media playback notifications depend on the audio route being used:

- Bluetooth audio routes shall use the approach described in Notifications (page 222) and Audio Data Received using A2DP Profile (page 224).
- Wired audio routes shall use iAP2.

2024-05-13 | Copyright © 2024 Apple Inc. All Rights Reserved.

41.7.4 Turn-By-Turn Directions Using Siri

Siri can initiate active route guidance to provide turn-by-turn directions. In case the device is the active source and is already playing music, turn-by-turn directions will be mixed in as part of the audio stream. In case the device is not playing music, the accessory should be able to mix in turn-by-turn directions with the active audio source.

The device will notify the accessory to play turn-by-turn directions only over Bluetooth. Detailed information on how to distinguish between music playback and turn-by-turn notifications is available in Notifications (page 222).

41.8 User Interaction with Siri Eyes Free in a Vehicle

A vehicle using Siri Eyes Free mode shall integrate the Siri experience with the existing in-vehicle entertainment system and controls. The vehicle should provide a convenient interface to initiate, continue, and end a Siri session. Once a Siri session is running, the vehicle shall display a visual cue indicating voice recognition is in use. Figure 41-7 (page 191) outlines how a Siri interaction should be designed.

2024-05-13 | Copyright © 2024 Apple Inc. All Rights Reserved.

Figure 41-7 Siri Eyes Free user interaction

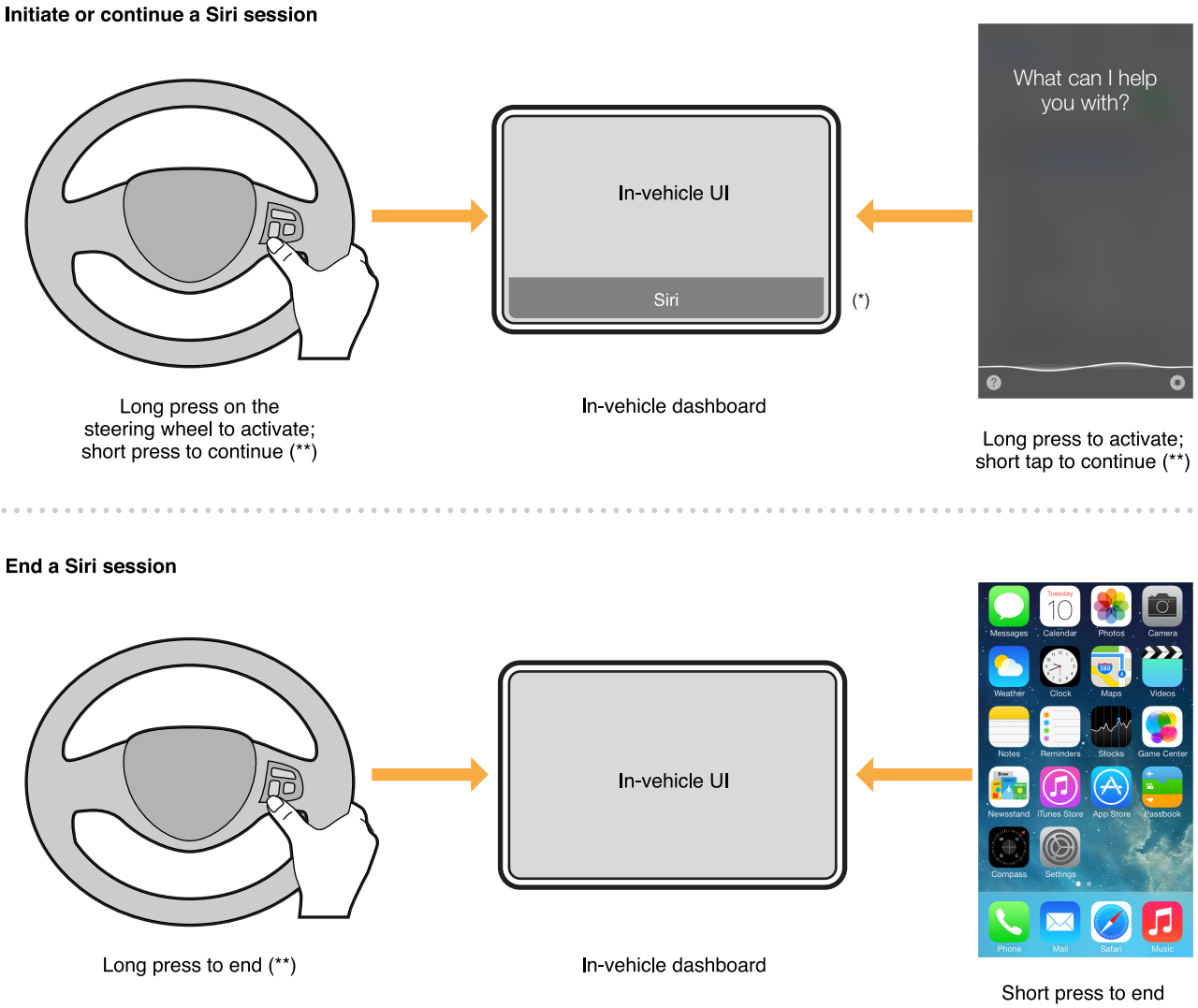

As shown in Figure 41-7 (page 191):

- (*) If the accessory wishes to indicate Siri is active, it shall do one of the following:
  - Display the word 'Siri' (as capitalized) with no additional text or icon.
  - Use generic text or icon not resembling the Siri microphone icon.
- (**) If the vehicle is equipped with steering wheel controls, the steering wheel shall have a dedicated button or a long-press action on a button to start, continue and end a Siri session. The button long-press shall be 600 ms or less. If no steering wheel controls are available, a soft button shall be available within the in-vehicle user interface to start, continue or end a Siri session.

2024-05-13 | Copyright © 2024 Apple Inc. All Rights Reserved.

When a vehicle enables Siri Eyes Free mode, the device will not display any onscreen Siri content. If the device was locked at the time the Siri session was activated from the vehicle, it will remain locked and the screen will not turn on. If the user unlocks or manually activates the device while in an Eyes Free Session there will be a notification the device is in an active Siri session but there will be no visual Siri content displayed.

41.9 Enabling/Disabling Siri from the Device

The user has the ability to disable or enable Siri from the Settings menu on the device. When Siri is disabled, Voice Control becomes the recognition engine on the device and will be triggered by default. The accessory may choose to either:

- Activate Voice Control (in the same way Siri is activated) as in Figure 41-8 (page 192).
- Display a warning message and not send an activation command to the device as in Figure 41-9 (page 193).

Figure 41-8 Siri is disabled - activating Voice Control

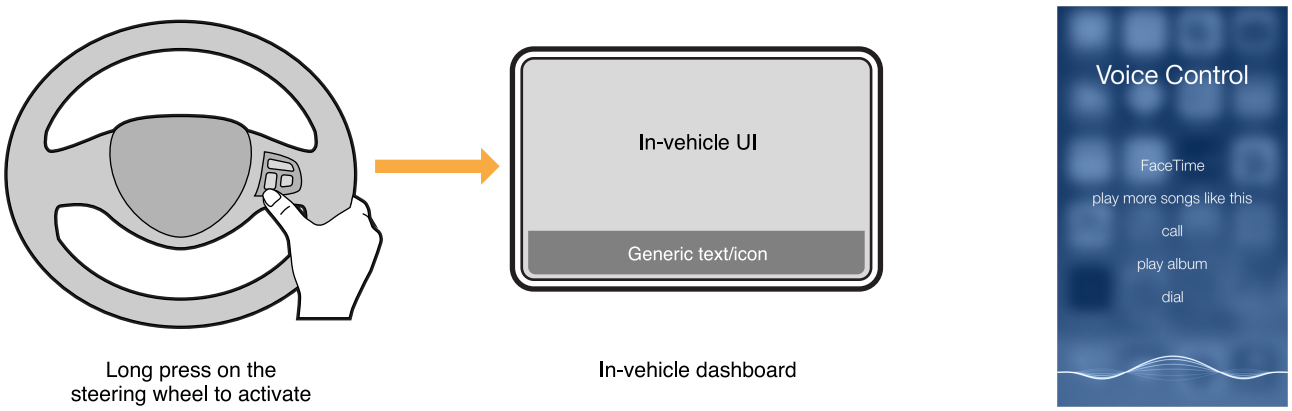

Figure 41-9 Siri is disabled - displaying a warning message

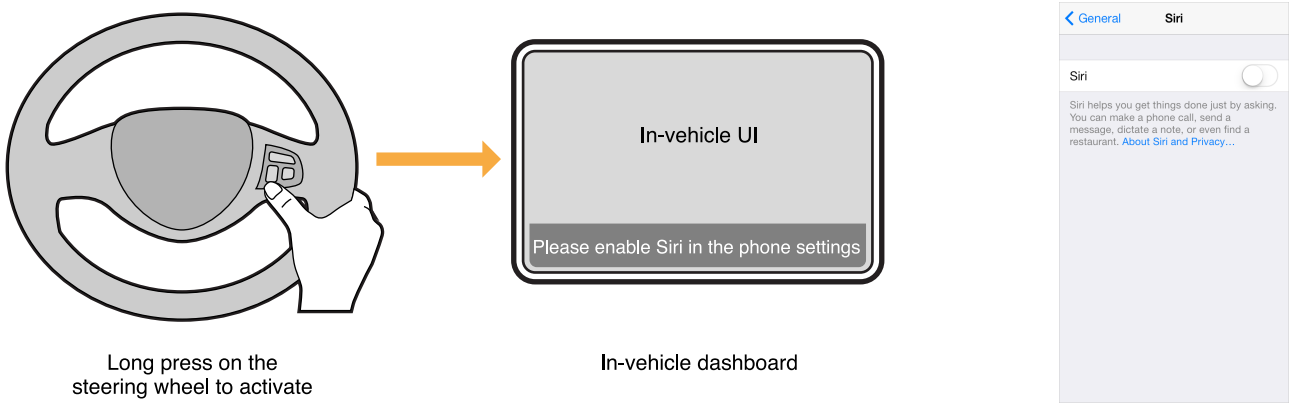

41.10 Test Procedures

41.10.1 Siri Eyes Free

The following test procedures are applicable to accessories interacting with Siri Eyes Free.

The ideal test operator is a native speaker of North American English. If the operator's native language is not North American English, set Siri to the operator's native language and translate the provided phrases into their native language.

41.10.1.1 General

1. Pair and establish a Bluetooth Hands-Free Profile (HFP) connection between the device and the head unit. Activate Siri from the vehicle steering wheel button (for example, by pressing and holding):
   a. Observe the device screen remains inactive after a Siri session has started (a visual indicator will be visible on the device if the screen is activated manually).
   b. Ensure Siri's opening chime is heard completely through the vehicle speakers.
   c. Observe a visual notification in the in-car User Interface (UI) indicating a Siri session is active (for example, text notification, on-screen UI).
2. Activate Siri from the vehicle steering wheel button and say "Send a message to Peter. How are you?". While still saying the message, press the vehicle steering wheel button to cancel Siri:
   a. Ensure the device screen remains inactive (if manually activated, the visual indicator on the phone will disappear).
   b. Verify the in-car Siri UI interaction is dismissed and the head unit returns to its prior state before the Siri interaction.

2024-05-13 | Copyright © 2024 Apple Inc. All Rights Reserved.

3. Activate Siri from the vehicle steering wheel button and say "How is the weather in San Francisco?". Wait for Siri to respond with the weather forecast. Once the weather forecast is complete, resume Siri from the vehicle steering wheel button and say "What about New York?":
   a. Confirm the visual indicator is still active on the phone.
   b. Listen for the Siri opening chime.
   c. Verify the vehicle UI indicates a Siri session is active.
   d. Verify Siri responds with the weather forecast for New York.
4. In case the vehicle UI offers on-screen controls to activate/cancel/resume Siri, repeat steps (1) to (3) for all on-screen controls.
5. Activate Siri from the steering wheel button and say "What's the time?". Listen to the current time and do not interact with Siri or the device. After 5 seconds have expired:
   a. Observe the visual Siri session indicator on the phone is no longer visible.
   b. Verify the in-car UI for Siri interaction was dismissed.
   c. Verify the head unit returned to its prior state before the Siri interaction.
6. Listen to FM radio from the car speakers (for example, no A2DP streaming active). Press and hold the device Side/Top/Home button to activate Siri:
   a. Observe a visual notification in the in-car UI indicating a Siri session is active (textual notification, on-screen UI, etc.).
   b. Observe Siri's interaction on the device screen and ask "What's the time?".
   c. After Siri has responded, lock the device again to dismiss the Siri session by pressing the device Side/Top/Home button.
7. Open Settings and turn Siri off. Activate Siri from the head unit. Observe one of the following depending on the actual implementation (a) Voice Control starts instead of Siri (b) The head unit displays a warning indicating Siri Eyes Free is not available.
8. Open Settings and turn Siri back on. Verify Siri can be activated/cancelled from the head unit and from the device Side/Top/Home button.
9. Open Settings and turn Bluetooth off. Verify Siri cannot be started.
10. Open Settings and turn Bluetooth back on. Verify Bluetooth HFP profile reconnects and Siri can be activated/cancelled from the head unit and from the device Side/Top/Home button.
11. Confirm there is no accessory battery status level indicator icon displayed on the device status bar.

41.10.1.2 Siri Dialog

1. Activate Siri from the vehicle's steering wheel button and say "Send a text message to *insert contact name*". When Siri prompts "What would you like it to say?", dictate a short message. After Siri has read back the dictated message, say "Review it". After Siri has read back the message again, say "Review it" again. Repeat this cycle ~5 times to ensure the head unit is able to handle a long interaction with Siri. At the end say "Send it" and verify the message is sent. Verify the opening

2024-05-13 | Copyright © 2024 Apple Inc. All Rights Reserved.

chime is audible and the message is sent. After the Siri session is closed, verify the audio playback went back to the audio state it was in before Siri was activated (that is, if audio was paused it remains paused, if it was playing it resumes playing).

2. Start Siri from the vehicle's steering wheel button and ask for directions. Follow up through the dialog until the navigation is started. Verify the Siri session is closed and the audio playback returns to the audio state it was in before Siri was activated (that is, if audio was paused it remains paused, if it was playing it resumes playing).
3. Start Siri from the vehicle's steering wheel button and say "Search the web for polar bears". Verify Siri Eyes Free mode is on and this use case is blocked by Siri. In some implementations the vehicle has to be in motion before Siri Eyes Free is activated by the car kit.
4. Start Siri from the vehicle's steering wheel button and say "What is the current time in Munich?". After Siri answers but before ~5 seconds have elapsed, resume Siri (for example, using a short press on the steering wheel button) and verify Siri is activated again. Say "What about San Francisco?". Repeat (with a different city) and verify this can continue indefinitely as long as there is a short press on the steering wheel button within 5 seconds of the last response.

41.10.1.3 Bluetooth HFP A2DP Music

1. Establish a Bluetooth A2DP connection and switch to Bluetooth audio source on the head unit. Activate Siri and say "Next track". Verify the track advances and audio is played through the vehicle speakers. Verify the Siri in-car UI is dismissed and the head unit returns to its initial audio state.
2. Activate Siri and say "Pause the music". Verify audio remains paused after Siri has been dismissed. Verify the Siri in-car UI is dismissed and the head unit returns to its initial audio state.
3. Pause music playback on the head unit (using AVRCP command). Activate Siri and ask "What time is it?". Verify the music playback remains paused after the Siri session has been dismissed. Verify the Siri in-car UI is dismissed and the head unit returns to its initial audio state.
4. Switch to FM radio on the head unit. Activate Siri and say "Play me a song". Verify the head unit is able to automatically switch to Bluetooth audio and music starts playing. Verify the beginning of the selected track is heard (for example, there is no skipping of audio packets). Verify the Siri in-car UI is dismissed and the head unit returns to its initial audio state.
5. Activate Siri and say "Shuffle all songs". Verify the head unit correctly updates the NowPlaying track information. Verify the Siri in-car UI is dismissed and the head unit returns to its initial audio state.
6. Activate Siri and ask to play a specific artist or title. Verify the Siri session is dismissed after the music starts. Confirm the correct metadata is displayed on the screen. Verify the Siri in-car UI is dismissed and the head unit returns to its initial audio state.

2024-05-13 | Copyright © 2024 Apple Inc. All Rights Reserved.

41.10.1.4 Call

1. Activate Siri and call a contact with more than one phone number (for example, home and mobile). Wait for Siri's response asking which phone number to call. Answer with "home". Verify call transition is handled correctly by the head unit and any Siri UI displayed on the vehicle screen is dismissed.
2. While device music is playing, activate Siri and say "Call *(insert contact to call)*". Verify call transition is handled correctly by the head unit. Verify device music playback resumes after the call has been answered and terminated on the far end. Verify the Siri in-car UI is dismissed and the head unit returns to its initial audio state.
3. While device music is playing, start Siri and say "Call *(insert contact to call)*". Verify call transition is handled correctly by the head unit. Verify device music playback resumes after the call has been answered and terminated on the near end (that is, on the head unit). Verify the Siri in-car UI is dismissed and the head unit returns to its initial audio state.
4. While in a Siri session, receive an incoming call on the head unit. Verify the head unit handles call-signaling correctly and transitions to the phone UI once the call has been accepted. Verify the Siri in-car UI is dismissed and the head unit returns to its initial audio state.

41.10.1.5 Bluetooth + Wired iAP2

1. Connect the device to the head unit. Switch to device audio and verify audio is playing. Activate Siri and say "Next track". Verify the track advances and the head unit displays the track metadata correctly. Verify the Siri in-car UI is dismissed and the head unit returns to its initial audio state.
2. From the head unit UI, select a playlist with a single song and start playing it. Start Siri from the vehicle steering wheel and say "Play ..... *make sure to select a song to play (a) not in the same album as the single-track playlist and (b) not song track index 0 of its album*". Verify the new song starts playing and the head unit correctly displays the track metadata for the new song. Verify the Siri in-car UI is dismissed and the head unit returns to its initial audio state.
3. Turn Shuffle off on the head unit UI. Then start Siri and say "Shuffle all songs". Verify the shuffle indicator on the head unit UI is updated and the correct track metadata for the new now playing song is displayed correctly. Verify the Siri in-car UI is dismissed and the head unit returns to its initial audio state.
4. Switch to FM radio on the head unit. Activate Siri and say "Play me a song". Verify the head unit is able to automatically switch to device audio source and music starts playing through the speakers. Verify there is no skipping of audio at the beginning of the selected track. Verify the Siri in-car UI is dismissed and the head unit returns to its initial audio state.
5. Pause music playback on the head unit (using iAP2 commands). Activate Siri and ask "What time is it?". Verify music playback remains paused after the Siri session has been dismissed. Verify the Siri in-car UI is dismissed and the head unit returns to its initial audio state.

2024-05-13 | Copyright © 2024 Apple Inc. All Rights Reserved.

6. While device music is playing, start Siri and say "Call *(insert contact to call)*". Verify call transition is handled correctly by the head unit. Verify device music playback resumes after the call has been answered and terminated on the far end. Verify the Siri in-car UI is dismissed and the head unit returns to its initial audio state.
7. While device music is playing, start Siri and say "Call *(insert contact to call)*". Verify call transition is handled correctly by the head unit. Verify device music playback resumes after the call has been answered and terminated on the near end (for example, on the head unit). Verify the Siri in-car UI is dismissed and the head unit returns to its initial audio state.
8. Pause music playback on the head unit (using iAP2 commands). Start Siri and say "Call *insert contact name to call*". Verify call transition is handled correctly by the head unit. Verify device music playback remains paused after the call has been answered and terminated on the far end. Verify the Siri in-car UI is dismissed and the head unit returns to its initial audio state.

2024-05-13 | Copyright © 2024 Apple Inc. All Rights Reserved.

42. Wi-Fi Information Sharing

Wi-Fi configuration information can be exchanged between devices and accessories.

Devices can share Wi-Fi configuration information with an accessory. The accessory can initiate this process, but the user shall grant permission for the device to share this information. The device can only share information about the currently connected Wi-Fi network, and this feature will not account for other router-configured access control mechanisms, such as RADIUS or MAC address filtering.

Figure 42-1 Wi-Fi information sharing alert

See the Accessory Interface Specification (page 24) for more information.

2024-05-13 | Copyright © 2024 Apple Inc. All Rights Reserved.

Protocols

43. USB Power Capability Vendor Request

If the accessory is a USB host, and it does not implement iAP2 (page 210), then it may send an Apple-specific USB vendor request communicating how much power is available to the device. In this case, the accessory shall enumerate and identify the presence of a device, then send the vendor request. The vendor request shall be sent every time the device is enumerated by the accessory.

Table 43-1 USB Vendor Request for non-iAP2 accessory USB Embedded Host

Field	Value	Comments
`bmRequestType`	`0x40`	Device-to-host request, vendor-defined type, device is recipient.
`bRequest`	`0x40`	Vendor-defined USB get enabled capabilities request.
`wValue`	See comments.	Charging current available, expressed as an offset from 500 mA. Shall be 500 (1000 mA charging current available), 1000 (1500 mA charging current available), 1600 (2100 mA charging current available), 1900 (2400 mA charging current available), or 2500 (3000 mA charging current available).
`wIndex`	See comments.	Shall be the same as wValue.
`wLength`	`0`	0 bytes expected.

2024-05-13 | Copyright © 2024 Apple Inc. All Rights Reserved.

44. USB D+/D- Resistor Networks

Accessories not implementing any of the following may use USB resistor networks to identify their current capability:

- iAP2 (page 210).
- USB Power Capability Vendor Request (page 200).
- USB Type-C Current (page 205).
- USB Power Delivery (PD) (page 204).

Device power draw varies with environmental factors. Accessory power source testing shall be performed with programmable loads, not devices.

44.1 Declaring Power Source Capability

Accessories shall connect the USB D+ and USB D- pins to resistor networks as shown in Figure 44-1 (page 201).

Figure 44-1 USB D+/D- resistor networks

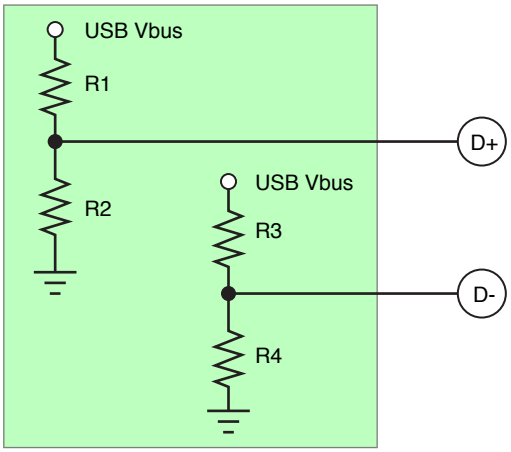

Every iOS device-compatible connector on an accessory using a USB resistor network shall have its own set of resistors. The accessory shall be capable of supplying the total current required when all connectors are in use, regardless of whether the connectors are compatible with devices or not.

2024-05-13 | Copyright © 2024 Apple Inc. All Rights Reserved.

The resistor network shall be connected at all times unless the accessory uses one of the following methods to enable charging or detect the presence of a device. In these cases, it shall immediately present the resistor network. The accessory:

- Uses a direct user action to enable charging.
- Senses the attachment of the device using electromechanical means such as a contact switch.

The accessory shall not monitor the USB D+ and USB D- pins to detect the presence of a device.

Resistors used to implement the networks specified in Figure 44-1 (page 201) shall have a tolerance of 1% or better. The resistor network shall not be emulated by driving the voltage of the USB D+/D- pins using some other means.

Table 44-1 USB D+/D- resistor values

Max Current	R1	R2	R3	R4
3000 mA	43.2 kΩ	49.9 kΩ	24.9 kΩ	49.9 kΩ
2400 mA	43.2 kΩ	49.9 kΩ	43.2 kΩ	49.9 kΩ
2100 mA	43.2 kΩ	49.9 kΩ	75.0 kΩ	49.9 kΩ
1000 mA	75.0 kΩ	49.9 kΩ	43.2 kΩ	49.9 kΩ

44.2 Identifying Power Source Current Limit

Accessories shall take into account the variation of USB VBUS voltage and resistor tolerances.

The resistor network values and corresponding current source limits should be identified using the following procedures:

1. Read the VBUS voltage using an ADC. If value is less than 4.5 V, return no resistors detected.
2. Pull-down the D+ and D- lines and read the voltage using an ADC. If either voltage value is less than 1 V, return no resistors detected.
3. Disable the D+ and D- pull-downs and allow the voltage to return to normal.
4. Read the D+ and D- voltages using an ADC (to determine the value for R1 and R3 respectively):
   - If voltage is >2.995 V (based on 1 MΩ load impedance), assume a resistor value of 24.9 kΩ.
   - If voltage is between 2.320 V and 2.995 V (based on 1 MΩ load impedance), assume a resistor value of 43.2 kΩ.
   - If voltage is < 2.320 V (based on 1 MΩ load impedance), assume a resistor value of 75.0 kΩ.
5. Determine the max current based on Table 44-2 (page 203).
6. If resistor values could not be identified, proceed to identify the power available based on the *USB Battery Charging Specification, Release 1.2*.

2024-05-13 | Copyright © 2024 Apple Inc. All Rights Reserved.

Table 44-2 USB D+/D- resistor values

Max Current	R1	R2	R3	R4
1000 mA	24.9 kΩ	49.9 kΩ	24.9 kΩ	49.9 kΩ
1000 mA	24.9 kΩ	49.9 kΩ	43.2 kΩ	49.9 kΩ
1000 mA	24.9 kΩ	49.9 kΩ	75.0 kΩ	49.9 kΩ
3000 mA	43.2 kΩ	49.9 kΩ	24.9 kΩ	49.9 kΩ
2400 mA	43.2 kΩ	49.9 kΩ	43.2 kΩ	49.9 kΩ
2100 mA	43.2 kΩ	49.9 kΩ	75.0 kΩ	49.9 kΩ
1000 mA	75.0 kΩ	49.9 kΩ	24.9 kΩ	49.9 kΩ
1000 mA	75.0 kΩ	49.9 kΩ	43.2 kΩ	49.9 kΩ
500 mA	75.0 kΩ	49.9 kΩ	75.0 kΩ	49.9 kΩ

Copyright © 2024 Apple Inc. All Rights Reserved.

45. USB Power Delivery (PD)

Accessories providing direct power using USB Power Delivery (PD) or drawing power from USB PD sources shall comply with the *USB Power Delivery Specification, Revision 3.1, Version 1.3*, see https://www.usb.org/document-library/usb-power-delivery.

Accessories implementing USB PD shall incorporate a USB-IF certified PD controller with a *Silicon* Test ID from the USB-IF, see https://www.usb.org/products.

Apple recommends the GRL-USB-PD-C2 (see https://www.graniteriverlabs.com/en-us/test-solutions/protocol-power-test-solutions/usb-pd-c2) for USB PD testing and compliance verification.

2024-05-13 | Copyright © 2024 Apple Inc. All Rights Reserved.

46. USB Type-C Current

Accessories providing direct power using USB Type-C Current or drawing power from USB Type-C Current sources shall comply with the *USB Type-C Cable and Connector Specification, Release 2.3*, section 4.6.2.

Apple recommends the GRL-USB-PD-C2 (see https://www.graniteriverlabs.com/en-us/test-solutions/protocol-power-test-solutions/usb-pd-c2) for USB Type-C Current testing and compliance verification.

2024-05-13 | Copyright © 2024 Apple Inc. All Rights Reserved.

47. Advanced Audio Distribution Profile (A2DP)

Accessories may implement the Advanced Audio Distribution Profile (A2DP) over Bluetooth (page 215) to receive audio from iPhone, iPad, Apple Watch, Apple TV, Mac, and Apple Vision Pro.

The audio content from the device can be broadly classified into two categories:

- Audio content from music, video, or gaming applications.
- System-generated sounds for alerts and notifications.

A2DP is often implemented in speakers and headsets.

Accessories implementing A2DP shall satisfy all requirements stated in Bluetooth (page 215).

47.1 Bluetooth A2DP Specification

Accessories implementing the Advanced Audio Distribution Profile shall meet the requirements of the Bluetooth *Advanced Audio Distribution Profile* specification, Version 1.2.

47.1.1 AVDTP Transactions

Accessories shall respond to Audio/Video Distribution Transport Protocol (AVDTP) signaling transactions before the device's 5 second RTX_SIG_TIMER expires or the device will terminate the signaling channel. See Section 6.2 "Transaction Model" and section 6.4 "Signal Command Set" of the Bluetooth *Audio/Video Distribution Transport Protocol*, Version 1.3.

47.2 SubBand Codec (SBC)

The SBC Codec Specific Information Elements, defined in Section 4.3.2 of the A2DP specification, applicable to iOS devices and Mac computers are listed in Table 47-1 (page 206).

Table 47-1 SubBand Codec Information Elements for iOS devices and Mac computers

Element	Value
Sampling Frequency	44,100 Hz

2024-05-13 | Copyright © 2024 Apple Inc. All Rights Reserved.

Element	Value
Channel Mode	Stereo
Block Length	16
Subbands	8
Allocation Method	Loudness
Bitpool range	2 to 53. Accessories for iOS devices and Mac computers should support 53.

47.3 MPEG 2/4 AAC Codecs

Devices support the non-mandatory codec MPEG-2/4 AAC, as defined in Section 4.5 of the *Advanced Audio Distribution Profile* specification, Version 1.2. Accessories should use the AAC codec in addition to SBC, because AAC provides higher audio quality for a given bit rate.

> **Note:**
> The following specifications provide details of Apple's implementation of the MPEG-2/4 AAC codec. In case of conflicts, the A2DP specification governs.

The MPEG 2/4 AAC Codec Specific Information Elements, defined in Section 4.5 of the A2DP specification, applicable to devices are listed in Table 47-2 (page 207).

Table 47-2 MPEG-2/4 AAC Codec Information Elements for devices

Element	Value
Object Type	MPEG-2 AAC LC
Sampling Frequency	44,100 Hz
Channels	2
Bit rate	264,630 bps
VBR	0

AAC audio stream packets in devices have the structure shown in Table 47-3 (page 207).

Table 47-3 AAC audio packet for devices

L2CAP	AVDTP	MPEG-4 LATM	MPEG-4 AAC
Header	Header	AudioMuxElement	Audio Payload

2024-05-13 | Copyright © 2024 Apple Inc. All Rights Reserved.

The AAC Media Payload Format, as defined in Section 4.5.4 of the A2DP specification, is formatted using LATM, as defined in Section 4 of *IETF RFC 3016*. The following notes apply to the packet fields shown in Table 47-3 (page 207).

- The recommended L2CAP MTU value for each device's AAC streaming channel is 885 bytes.
- The AVDTP Header is shown as the RTP header in Figure 4 of RFC 3016, and is the header defined in Section 7.2.1 of the Bluetooth *Audio/Video Distribution Transport Protocol*, Version 1.2.
- The `AudioMuxElement` is the same as the RTP payload in RFC 3016. It is defined in Section 1.7.3, Table 1.41 in ISO/IEC 14496-3:2009, subpart 1. The `muxConfigPresent` argument to the `AudioMuxElement` is set to 1 (in-band mode), as recommended in Section 4.1 of RFC 3016. As recommended in Section 4.3 of RFC 3016, only one `AudioMuxElement` is put into each AVDTP packet.
- The audio payload is encoded using MPEG-4, as recommended in Section 4.5.4 of the A2DP specification.
- The accessory should support AAC-LC VBR and handle bit rate changes without audio gaps. Devices will vary AAC bit rate depending on the content.

47.4 Test Procedures

47.4.1 Audio Quality

Verify there are no audio quality issues in each of the following scenarios:

1. Stream music from the Apple Music app.
2. Stream music from a radio station within the Apple Music app.
3. Stream audio using the Apple Podcasts app.

47.4.2 Audio Switching

1. During A2DP streaming, switch audio back to device and switch back to accessory.
2. Verify audio was routed to the intended source, and audio quality was good switching back to Bluetooth.

47.4.3 HFP Interaction

1. Make incoming/outgoing call during A2DP.
2. Verify audio was suspended during the call and resumed after the call.

2024-05-13 | Copyright © 2024 Apple Inc. All Rights Reserved.

47.4.4 Siri

1. Trigger Siri during A2DP.
2. Verify audio resumed after the Siri session.

47.4.5 Video Playback

1. Stream A2DP while watching a video.
2. Verify audio/video synchronization and quality is good.

2024-05-13 | Copyright © 2024 Apple Inc. All Rights Reserved.

48. iAP2

Accessories may use the iAP2 protocol to access advanced device features, such as:

- Communicating securely with third-party iOS/iPadOS apps using the External Accessory Protocol (page 150).
- Accessing the media library and retrieving album artwork using Media Library Access (page 177) and Now Playing Updates (page 179).
- Launching apps using App Launch (page 133).
- Discovering compatible apps using App Discovery (page 132).
- Helping users find compatible apps in the App Store using App Match (page 134).
- Providing GNSS location data using Location Information (page 155).
- Supporting connectivity with Out-of-Band Bluetooth Pairing (page 180) and Wi-Fi Information Sharing (page 198).

See the Accessory Interface Specification (page 24) for more information.

2024-05-13 | Copyright © 2024 Apple Inc. All Rights Reserved.

49. Human Interface Device (HID)

Devices can accept input from and send output to Human Interface Device (HID) accessories, such as external keyboards, trackpads, mice, and game controllers. This capability is made available system-wide for all apps on the device as well as to support features built into iOS, iPadOS, and tvOS. If an accessory is designed to provide human input events to a specific third-party app, the accessory should use the External Accessory Protocol feature instead; see the Accessory Interface Specification (page 24) for more information.

The HID protocol can be implemented over:

- USB
- Bluetooth

49.1 Requirements

Accessories supporting the HID protocol shall comply with the following requirements:

- Accessories shall only send HID reports for changes in physical or virtual control surfaces declared in the corresponding HID descriptor.
- Accessories shall not send a HID report if there has not been any change in the state of the corresponding physical or virtual control surface. For example, the accessory shall never generate a "Play/Pause" event without the user pressing a dedicated "Play/Pause" button.
- Each HID report shall contain the correct number of bytes as described in its corresponding HID descriptor.
- The accessory shall not anticipate or assume corresponding state changes in the device after sending HID reports.
- Unless otherwise specified:
  - The accessory shall be capable of generating and receiving all HID usages declared in its HID descriptor.
  - The accessory's declared HID usages shall map directly to physical or virtual control surfaces on a 1:1 basis. For example, a button labeled "Play/Pause" shall send a Play/Pause HID usage and not "Play" or "Pause" usages. Compound controls such as knobs, joysticks, and directional pads may be considered multiple control surfaces. For example, clockwise and counterclockwise rotation may map to separate HID usages.

2024-05-13 | Copyright © 2024 Apple Inc. All Rights Reserved.

- Physical or virtual control surfaces generating HID reports shall be labeled with appropriate iconography or text corresponding to the resulting device behavior. For example, a Play/Pause button shall be labeled with the text 'Play/Pause' or a Play/Pause icon.
- The accessory shall send one HID report in response to each direct user action on the corresponding physical or virtual control surface. For example:
  - When the user presses a button, one 'button pressed' HID report shall be sent to the device.
  - When the user releases the button, one 'button released' HID report shall be sent to the device.

49.1.1 Report Descriptor

When padding packets to align within a byte boundary, each Main item tag (Input, Output, or Feature) shall be marked constant. Padding bits should be set to 0.

When defining Variable type Input/Output fields, either:

- Report Count number shall correspond to the number of Usages specified.
- Report Size shall be 8 and the Report Count shall correspond to the size of a multi-byte blob.

49.1.2 USB

If implementing HID over USB, the accessory shall comply with the *Device Class Definition for Human Interface Devices 1.11*, see https://www.usb.org/hid.

49.2 Test Procedures

49.2.1 General

1. Verify the accessory generates and receives all HID usages declared in the component's HID descriptor.
2. Verify the accessory does not send a HID report if there has not been any change in the state of the control surfaces (that is, no polling of HID reports).
3. Verify if any accessory has physical or virtual control surfaces generating accessory HID usages, the controls are labeled with appropriate iconography or text corresponding to the resulting device behavior (for example, a Play/Pause button is labeled with the text "Play/Pause" or a Play/Pause icon).
4. Verify HID usages map to physical or virtual controls on a 1:1 basis (for example, Play button only sends Play usages, not Play/Pause).

2024-05-13 | Copyright © 2024 Apple Inc. All Rights Reserved.

5. Verify one accessory HID report is sent in response to each direct user action on the corresponding physical or virtual control surface. For example, when the user presses a button, one 'button pressed' usage report is sent, and a separate 'button released' usage report is sent when the user releases the button.

2024-05-13 | Copyright © 2024 Apple Inc. All Rights Reserved.

Transports

50. Bluetooth

Accessories integrating Bluetooth technology shall comply with the requirements stated in this chapter.

Accessories shall support the *Bluetooth Core Specification* Version 2.1 + EDR or later.

50.1 Enhanced Data Rate

The Enhanced Data Rate (EDR) feature introduced in the *Bluetooth 2.0* specification enables accessories to communicate more efficiently. Accessories shall use EDR for the following reasons:

- EDR provides higher data rates compared to Basic Data Rate (BDR).
- EDR communicates more efficiently, transferring more data bits in less time.
- EDR reduces power consumption per bit transferred.
- EDR improves coexistence with Wi-Fi and other Bluetooth accessories by using less airtime.
- EDR improves performance in multipoint configurations.

50.2 Adaptive Frequency Hopping

Adaptive Frequency Hopping (AFH) introduced in the *Bluetooth 1.2* specification improves coexistence with Wi-Fi and other connected Bluetooth accessories. Accessories shall use AFH.

50.3 Sniff Mode for Low Power Consumption

Minimizing power consumption is critical for all mobile devices, therefore accessories shall:

- Support and should request Bluetooth sniff mode.
- Accept sniff mode requests and support valid parameters from the Bluetooth specification.
- Support a sniff interval of 15 ms.
- Support sniff subrating.
- Not renegotiate sniff mode after it is established.

Accessories should use sniff mode values of:

- Max Interval: 15 ms
- Min Interval: 15 ms

2024-05-13 | Copyright © 2024 Apple Inc. All Rights Reserved.

- Sniff Attempt: 1
- Sniff Timeout: 0

Accessories compatible with iOS devices and Mac computers should use sniff mode as often as possible, especially when there is little or no data being transmitted over the Bluetooth link. Sniff mode enables better antenna sharing with Wi-Fi, in addition to the power consumption advantages.

Sniff mode parameters are specific to the usage model and Bluetooth profile. Accessories should request sniff mode with appropriate parameters for specific usage models. If the accessory does not send a sniff mode request, the device may send a sniff mode request. When the device sends a sniff mode request, the accessory shall accept the request and parameters without negotiation.

If the accessory requests sniff mode, the accessory shall set the sniff interval to less than a third of the Bluetooth baseband Link Supervision Timeout (page 218), to make the Bluetooth link less susceptible to interference. To improve link robustness, the accessory should use a shorter sniff interval instead of multiple sniff attempts.

Links with a sniff interval of 1 second or more require a large correlation window, which has to be taken into account when calculating the number of sniff attempts. With sniff intervals shorter than 1 second, multiple sniff attempts can improve link robustness, but will increase power consumption.

50.4 Role and Topology Management

Accessories shall:

- Accept device Role Switch requests.
- Continue with the connection when the device rejects a request for Role Switch.

In a Bluetooth connection, there are two entities:

- The Central entity establishes a common clock and frequency hopping synchronization reference.
- The Peripheral entity synchronizes with the Central entity.

The Central entity can be synchronized with multiple Peripheral entities, thus forming a piconet. The Central entity can also be a Peripheral entity to another Central entity, creating a scatternet.

Accessories simultaneously connecting to multiple iOS devices or Mac computers shall support creating a scatternet.

Scatternets create complications since the device has to alternate between piconets, wasting valuable bandwidth. Efficiently managing network topology is important to maximize performance. The device may request a Role Switch, depending on its current topology, and the accessory shall accept the request. The device may also reject a Role Switch request due to topology concerns, as suboptimal topologies may degrade audio quality and the user experience.

2024-05-13 | Copyright © 2024 Apple Inc. All Rights Reserved.

Accessories should avoid requesting to be the Central entity, as in more frequently occurring scenarios the device needs to be the Central entity. Accessories insisting on being the Central entity may negatively impact the overall user experience.

50.5 Extended Inquiry Response

Accessories shall provide the following information in their Extended Inquiry Response packet:

- Local Name of the accessory (Complete or Shortened).
- TX Power Level.

During Bluetooth discovery, devices display accessories Friendly Names when available. Extended Inquiry Response enables accessories to proactively send their Local Name, and other information, as part of an Inquiry Response to increase the speed and efficiency of the discovery process.

Accessory Local Name should match the accessory's labeling and packaging without colons ':' or semi-colons ';'. Accessories may append up to six differentiating characters to their Local Name, such as the last few digits of a serial number or MAC address, if users are likely to encounter multiple accessories at the same time using the same name. If the accessory allows a user to customize the Local Name parameter, the accessory should provide a means to restore the factory default name.

50.6 Secure Simple Pairing

Accessories shall:

- Use Secure Simple Pairing.
- Use the Numerical Comparison method, if it has a display and input device supporting it.

Secure Simple Pairing greatly increases security, and is a mandatory security feature in the Bluetooth 2.1 specification. To protect against a 'man-in-the-middle' attack, the Numerical Comparison association model should be used whenever feasible. See Volume 1, Section 5.4 in the *Bluetooth Core Specification*, Version 2.1 + EDR.

50.7 Pairing Button

If the accessory has a labeled dedicated pairing control, it should use official Bluetooth branding. See https://www.bluetooth.com/develop-with-bluetooth/marketing-branding/.

2024-05-13 | Copyright © 2024 Apple Inc. All Rights Reserved.

50.8 Class of Device (CoD)

iOS devices and Mac computers use the accessory's Class of Device for UI purposes or to configure specific features. Accessories shall accurately set their Class of Device using the Bluetooth SIG defined Major Device Class and Minor Device Class. See Volume 3, Part C, Section 3.2.4 in the *Bluetooth Core Specification*, Version 5.0. For example, an audio/video accessory intended to operate in a vehicle should set Major Device Class to 'audio/video' and Minor Device Class to 'car-audio'.

50.9 Link Supervision Timeout

Link supervision timeout is used to detect link loss between an accessory and a device. An accessory shall set the link supervision timeout to 2 seconds or greater when it is the Central entity, to account for the unpredictable nature of RF signals, as well as the device's need to service other concurrent wireless systems.

50.10 Delay Reporting

As of iOS 8.2, devices support Delay Reporting commands as specified in the Bluetooth *Audio/Video Distribution Transport Protocol*, Version 1.3. Accessories should provide this information to improve audio/video synchronization for video playback. Accessories should not report a delay of more than 1000 ms, and should not update the delay more than 1 time per second.

50.11 Profiles

The Apple Bluetooth profiles knowledge base article https://support.apple.com/kb/ht3647 provides a complete list of the profiles supported by devices. Bluetooth specifications are the starting point for designing accessories compatible with these devices. The following sections provide additional information and requirements for common profiles to help accessory developers achieve superior results.

50.11.1 Device ID Profile (DID)

Accessories shall:

- Support Bluetooth Device ID Profile, Version 1.3 or later.

2024-05-13 | Copyright © 2024 Apple Inc. All Rights Reserved.

- Use their Company Identifier from the Assigned Numbers specification assigned by the Bluetooth SIG as the Vendor ID value (VID), see https://www.bluetooth.com/specifications/assigned-numbers/. Bluetooth HID Profile accessories may use a VID assigned by the USB Implementers Forum (USB-IF), see https://www.usb.org/getting-vendor-id, if the manufacturer does not have a Bluetooth SIG Company Identifier.
- Use its VID value for the end product manufacturer.
- Not use the Company ID assigned to Apple by the Bluetooth SIG, or the Vendor ID assigned to Apple by the USB Implementers Forum.
- Use the Vendor ID Source field to identify which organization assigned the value used in the Vendor ID field. See Section 5.6 of the *Bluetooth Device ID Profile Specification*.
- Use a ProductID value uniquely identifying the product.
- Use a Version value uniquely identifying the software version.

The Device ID record enables devices to identify the implementation of the remote accessory, which is used to bridge alternate interpretations of the Bluetooth specification when communicating with a remote accessory. It is important the information in the Device ID record uniquely identify the implementation in use.

In the case of Bluetooth car kit devices, the same car kit may be present in different car models. Ideally, the two car kits should have different ProductIDs. However, it is acceptable for them to have the same ProductID as long as they have identical hardware, software, and features. If the implementations differ at all, they should have different ProductIDs. The accessory can also use a secondary Device ID record to uniquely identify the product ID, or model number.

50.11.2 Service Discovery Protocol (SDP)

To facilitate caching Service Discovery Protocol service records, accessories shall:

- Support the ServiceDiscoveryServer Service Class.
- Support the ServiceDatabaseState attribute.
  - Attribute's value shall change whenever any SDP service record or attributes within a record are added, removed, or modified.
  - Attribute's value shall not change based on RFCOMM channel protocol parameters. Devices query these values separately at connection time.

50.11.3 Hands-Free Profile (HFP)

Accessories supporting Hands-Free Profile should meet the requirements of the *Bluetooth Hands-Free Profile Specification*, Version 1.5 or later. Additional Apple requirements are specified in this section.

Remote accessories can use the Bluetooth *Hands-Free Profile* for phone communications. To achieve the best user experience, the remote accessory should support the following features, which are optional in the Bluetooth specification.

2024-05-13 | Copyright © 2024 Apple Inc. All Rights Reserved.

50.11.3.1 Remote Audio Volume Control

Accessories supporting HFP should:

- Support Remote Audio Volume Control, so speaker volume on the hands-free accessory can be controlled from the device as described in Section 4.28 in the *Bluetooth Hands-Free Profile Specification*, Version 1.5.
- Set the Remote volume control bit in the Supported Features bitmap sent with the `AT+BRSF=` command.

In some situations it is easier for the user to control the output volume through the device, instead of directly on the remote accessory. For example, a car passenger (or if the car is parked, the driver) could use the volume slider on the phone to control audio volume. Volume control synchronization is outlined in Section 4.48.2 in the *Bluetooth Hands-Free Profile Specification*, Version 1.5.

50.11.3.2 Indicator Event Reporting

Accessories supporting HFP should use Indicator Event Reporting, and not perform repetitive status polling.

iOS devices and Mac computers support all mandatory and optional indicators specified in HFP version 1.5 (`service`, `call`, `callsetup`, `callheld`, `signal`, `roam`, `battchg`). To minimize unnecessary status polling using the `AT+CIND?` command, the remote accessory should enable Indicator Event Reporting by sending an `AT+CMER` command. The device will then send a `+CIEV` event when there is a status change. The remote accessory should request initial status using the `AT+CIND=?` and `AT+CIND?` commands, according to the HFP specification.

50.11.3.3 Voice Recognition Activation

Accessories supporting HFP shall:

- Support Voice Recognition Activation, both AG and HF, initiated as described in Section 4.25 in the *Bluetooth Hands-Free Profile Specification*, Version 1.5.
- Set the Voice Recognition Activation bit in the "SupportedFeatures" bitmap sent with the `AT+BRSF=` command.

iOS devices and Mac computers support voice recognition initiated by remote (Hands-Free) accessories, and iOS (Audio Gateway) accessories.

50.11.3.4 Echo Cancellation and Noise Reduction

When echo cancellation and noise reduction are performed locally on a hands-free accessory, the accessory should turn off echo cancellation and noise reduction on the device by sending an `AT+NREC` command, as described in Section 4.24 in the *Bluetooth Hands-Free Profile Specification*, Version 1.5.

2024-05-13 | Copyright © 2024 Apple Inc. All Rights Reserved.

iOS devices and Mac computers support echo cancellation and noise reduction by default. If a hands-free accessory performs echo cancellation and noise reduction, the accessory needs to turn these features off on the device (the Audio Gateway), to avoid unnecessary audio quality degradation due to duplicate audio processing.

50.11.3.5 In-Band Ringing

Accessories supporting HFP should also support In-Band Ringing as specified in Section 4.13.1 in the *Bluetooth Hands-Free Profile Specification*, Version 1.5. If the user sets a ring tone on the device, the same ring tone should sound on the hands-free accessory.

50.11.3.6 Synchronous Connection

Accessories supporting HFP shall:

- Support eSCO parameter set S2 and S3 and accept requests for these settings. See Section 5.6 of the *Bluetooth Hands-Free Profile Specification* version 1.5.
- Request eSCO parameter set S2 or S3 when setting up a Synchronous Connection. eSCO parameter set S1 should not be requested.
- Render audio within 40 ms after the SCO/eSCO connection has been set up.

eSCO packet types offer packet retransmission, whereas traditional SCO packets are not retransmitted. This improves audio quality and the user experience. eSCO packet types 2-EV3 and 3-EV3 offer a greater time interval between packets, which can improve Wi-Fi performance and allow time for other concurrent Bluetooth connections to send data.

Apple strongly recommends the use of 2-EV3 and 3-EV3 packets for SCO connections. Using HV3 packets is highly discouraged. HV3 packets require more link time and do not allow audio packet retransmission, which impacts audio performance in the presence of RF interference.

50.11.3.7 Wide Band Speech

Accessories supporting HFP should support Wide Band Speech, as described in Section 5.7.4 of the Bluetooth *Hands-Free Profile Specification*, Version 1.6. If Wide Band Speech is supported, the accessory should support the T2 link parameter settings.

Devices running iOS 5 or later support Wide Band Speech. If both the device and the accessory support Wide Band Speech, the device will use it for eSCO connection scenarios such as cellular calls, FaceTime, and Siri.

50.11.4 Message Access Profile (MAP)

Accessories supporting Message Access Profile shall:

2024-05-13 | Copyright © 2024 Apple Inc. All Rights Reserved.

- Support Message Notification, as described in Section 4.1 of the *Bluetooth Message Access Profile Specification*, Version 1.1.
- Register for notifications immediately after the connection is established, as described in Section 4.5 in the *Message Access Profile Specification*, Version 1.1.

Devices running iOS 13.0 or later support MAP 1.1.

50.11.5 Audio/Video Remote Control Profile (AVRCP)

Accessories supporting Audio/Video Remote Control Profile should meet the requirements of the *Bluetooth Audio/Video Remote Control Profile Specification*, Version 1.4. Additional Apple requirements are specified in this section.

50.11.5.1 Supported Operations

iOS devices and Mac computers support the following operation_IDs in passthrough commands:

- Play
- Stop
- Pause
- Fast Forward
- Rewind
- Forward
- Backward

50.11.5.2 Repeat and Shuffle Modes

Every device in the role of an AVRCP target supports Repeat and Shuffle modes. An AVRCP controller may use `SetPlayerApplicationSettingValue` to set a value on the device and `GetPlayerApplicationSettingValue` to read a value, as described in Sections 6.5.4 and 6.4.3 of the *Bluetooth Audio/Video Remote Control Profile Specification*, Version 1.4.

50.11.5.3 Notifications

Accessories supporting AVRCP shall:

- Register for notifications.
- Not perform repetitive device status polling.

Every device in the role of an AVRCP Target supports registering for notifications, as described in Section 6.7 of the *Bluetooth Audio/Video Remote Control Profile Specification*, Version 1.4. The commands `RegisterNotification` and `GetPlayStatus` are supported for these notifications:

- EVENT_PLAYBACK_STATUS_CHANGED
- EVENT_TRACK_CHANGED

2024-05-13 | Copyright © 2024 Apple Inc. All Rights Reserved.

- EVENT_NOW_PLAYING_CONTENT_CHANGED
- EVENT_AVAILABLE_PLAYERS_CHANGED
- EVENT_ADDRESSED_PLAYER_CHANGED
- EVENT_VOLUME_CHANGED

50.11.5.4 Play/Pause Button

Accessories supporting AVRCP implementing a Play/Pause control surface shall confirm the playback status of the device using AVRCP Notifications (page 222), before sending a Play or Pause command. See Supported Operations (page 222). Specifically:

- If a device notifies the accessory it is paused, pressing the accessory's Play/Pause control surface should send a Play command.
- If a device notifies the accessory it is playing, pressing the accessory's Play/Pause control surface should send a Pause command.
- The accessory should not infer device playback status based on the number of times the Play/Pause control surface has been pressed.

50.11.5.5 Volume Handling

Accessories supporting AVRCP should support Absolute Volume, as described in Section 6.13 of the *Bluetooth Audio/Video Remote Control Profile Specification*, Version 1.4.

Every device in the role of AVRCP Controller supports volume handling.

50.11.5.6 Browsing

Accessories supporting Browsing (in controller role) as part of AVRCP shall:

- Not try to index or cache the entire library upon connection. The device may contain tens of thousands of media items, and each may be present multiple times in the hierarchy.
- Not fetch all items when browsing a folder; only fetch items displayed to the user. The accessory may prefetch a few items to improve the responsiveness of the user interface.
- Not reorder items (for example, alphabetically).
- Not assume UIDs to be statically defined, especially in the root folder. The ordering and UIDs of folders and items may change at any point in future releases.
- Send the `SetBrowsedPlayer` command after receiving an EVENT_UIDS_CHANGED notification.
- Not assume the UID passed to the `PlayItem` command will result in the media player playing the UID.

Currently only the built-in Music app supports browsing. When switching between players, an EVENT_AVAILABLE_PLAYERS_CHANGED notification, and an EVENT_ADDRESSED_PLAYER_CHANGED notification will be generated. The UI needs to look at the feature bit mask of the listed player to determine whether browsing is currently available.

2024-05-13 | Copyright © 2024 Apple Inc. All Rights Reserved.

Devices running iOS 6.0 or later support AVRCP Browsing.

50.11.5.7 iOS App-Provided Metadata

An audio app running on a device may use the iOS Media Player Framework to provide metadata about the current audio stream to the accessory using AVRCP. Requirements and usage for these messages may be found in the `MPNowPlayingInfoCenter` class in Apple Media Player Framework documentation.

50.11.6 Advanced Audio Distribution Profile (A2DP)

See Advanced Audio Distribution Profile (A2DP) (page 206).

50.12 Audio Routing

Accessories can differentiate between various audio content provided by a device, and determine playback behavior.

An accessory can receive audio data from the device using either of two Bluetooth profiles:

- HFP using eSCO channel.
- A2DP using ACL channel.

The device determines which channel to use, depending on how the audio content is used. An audio path created for two-way communication (for example, phone calls or FaceTime) always uses the HFP (eSCO) route for sending audio data. Music and similar content uses the A2DP channel route. In the absence of a defined route, audio playback defaults to the device.

50.12.1 Audio Data Received using HFP Profile

Most of the audio content sent using HFP (eSCO) route requires two-way communication. Scenarios where HFP (eSCO) is used include, but are not limited to: cellular calls, FaceTime, and voice mail.

The accessory speaker and microphone should be dedicated to the HFP (eSCO) route, and not mixed/muxed with any other audio sources.

50.12.2 Audio Data Received using A2DP Profile

Audio content transferred using A2DP profiles can be broadly classified into two categories:

- Audio content from music, video, or game-like applications.
- System-generated sounds used for alerts and notifications.

2024-05-13 | Copyright © 2024 Apple Inc. All Rights Reserved.

50.12.2.1 Differentiating Audio Content from System Sounds

Music-like content can be differentiated from system sounds by adding support for Audio/Video Remote Control Profile (AVRCP) version 1.3 or later. The AVRCP profile allows an accessory to be aware of the audio playback device state, using notifications. See Audio/Video Remote Control Profile (AVRCP) (page 222).

When a device initiates audio playback over an A2DP channel for playing music content, an AVRCP notification EVENT_PLAYBACK_STATUS_CHANGED is sent to indicate playback status has changed to the play state. See Section 6.7.2 of the *Audio/Video Remote Control Profile Specification*, Version 1.4. This indicates audio data using the A2DP profile contains music. When a device initiates audio playback over an A2DP channel for playing system sounds, no AVRCP notifications are sent.

Figure 50-1 (page 225) and Figure 50-2 (page 226) show the difference between notifications for music playback, and system sounds.

Figure 50-1 Initiate Audio Playback (for example, music)

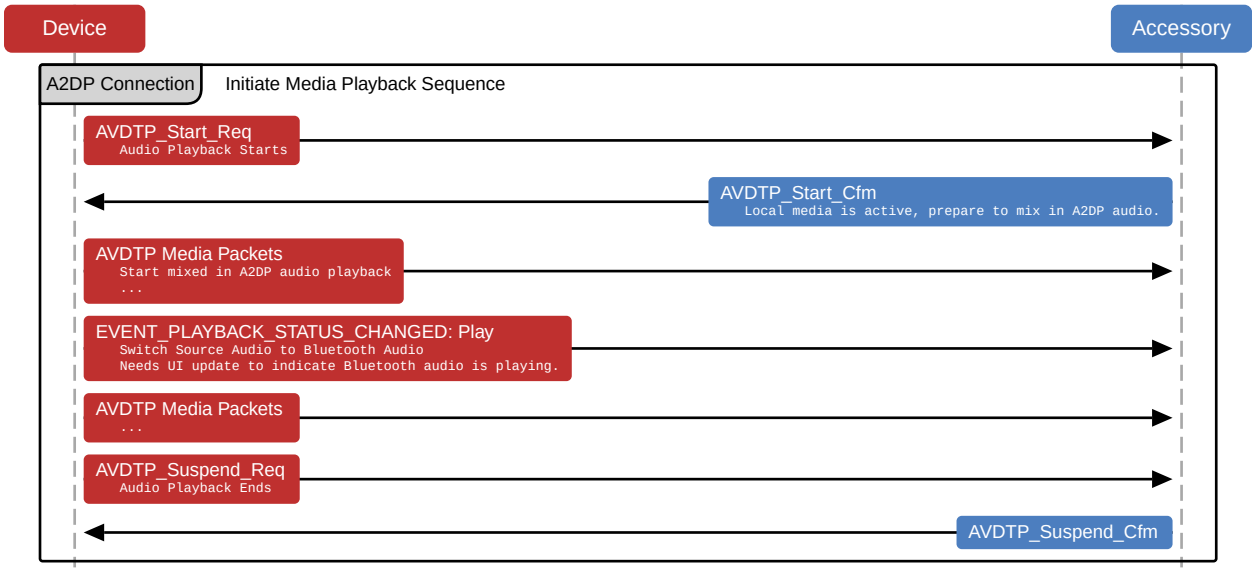

2024-05-13 | Copyright © 2024 Apple Inc. All Rights Reserved.

Figure 50-2 Initiate System Sound (such as turn-by-turn directions)

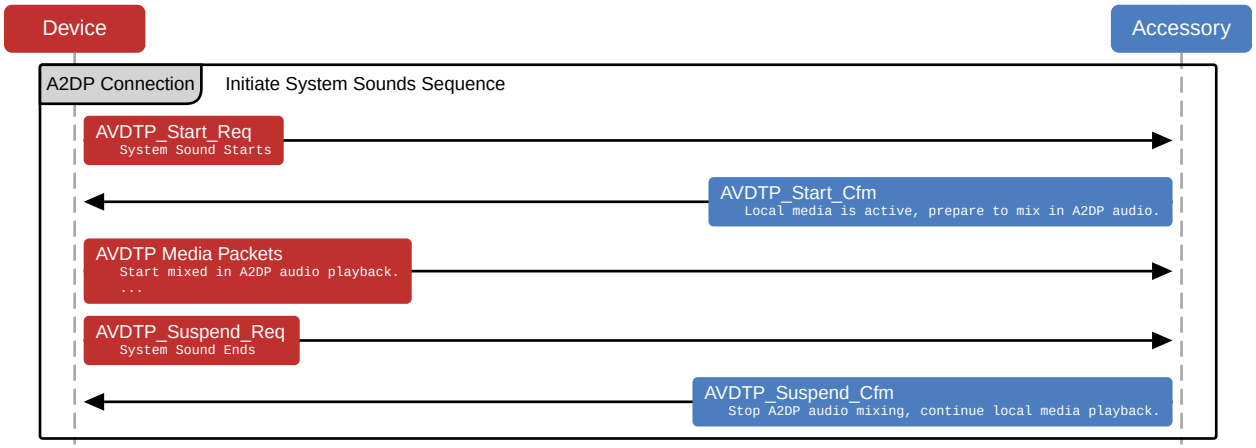

50.12.2.2 Expected Audio Routing Behavior for A2DP

The accessory should tune its audio routing behavior based on audio content over the A2DP channel.

If audio data contains music, accessory speakers are expected to be dedicated to audio data using the Bluetooth link, and any other audio playback is paused. If audio data contains system sounds, it is expected the accessory can render audio as desired. If the accessory is playing audio from a different source, it is not necessary to pause existing audio playback on the device, and system sound data can be mixed with the existing track for playback.

50.13 HID

When implementing HID over Bluetooth, the accessory should:

- Support Bluetooth HID Profile 1.1.
- Support Sniff Mode for Low Power Consumption (page 215).

The accessory should:

- Use the following parameters in SDP for sniff subrating:
  - HIDSSRHostMaxLatency - 450 ms (720 slots)
  - HIDSSRHostMinTimeout - 45 ms (72 slots)
- Use a typical report packet of 22 bytes or less. This is small enough to fit into a DH1 packet with L2CAP and HID header.

2024-05-13 | Copyright © 2024 Apple Inc. All Rights Reserved.

51. Bluetooth Low Energy (BLE)

The *Bluetooth 4.0* specification introduces Bluetooth Low Energy (BLE), a wireless technology targeted for accessories with limited battery resources. If Bluetooth Low Energy is supported, the accessory should follow the guidelines in this section.

51.1 Role

The accessory should implement either the Peripheral role as defined in the *Bluetooth 4.0* specification, Volume 3, Part C, Section 2.2.2.3 or the Broadcaster role, as defined in Section 2.2.2.1.

51.2 Advertising Channels

The accessory should advertise on all three advertising channels (37, 38, and 39) at each advertising event. See the *Bluetooth 4.0* specification, Volume 6, Part B, Section 4.4.2.1.

51.3 Advertising PDU

The accessory should use one of the following advertising PDUs:

- ADV_IND
- ADV_NOCONN_IND
- ADV_SCAN_IND

ADV_DIRECT_IND should not be used. See the *Bluetooth 4.0* specification, Volume 6, Part B, Section 2.3.1.

51.4 Advertising Data

The advertising data sent by the accessory should contain at least the following information as described in the *Bluetooth Core Specification Supplement*, Part A:

- Flags
- TX Power Level

2024-05-13 | Copyright © 2024 Apple Inc. All Rights Reserved.

- Local Name
- Services

The Local Name should match the accessory's markings and packaging and not contain a colon ':' or semi-colon ';'.

The accessory may put the Local Name and the TX Power Level data in the SCAN_RSP PDU if, for example, it needs to reduce power consumption or not all of the advertising data fit into the advertising PDU. Depending on its state, the device may not always perform active scanning.

The primary services should always be advertised in the advertising PDU. Secondary services should not be advertised. Services not significant to the primary use case of the accessory may be omitted if space is limited in the Advertising PDU.

The advertising data and the scan response data in the SCAN_RSP PDU should comply with the formatting guidelines in the *Bluetooth 4.0* specification, Volume 3, Part C, Section 18: it starts with a length field, followed by AD Type and AD Data.

51.5 Advertising Interval

The accessory should first use the recommended advertising interval of 20 ms for at least 30 seconds.

If it is not discovered within the initial 30 seconds, Apple recommends using one of the following longer intervals to increase chances of discovery by the device:

- 152.5 ms
- 211.25 ms
- 318.75 ms
- 417.5 ms
- 546.25 ms
- 760 ms
- 852.5 ms
- 1022.5 ms
- 1285 ms

> **Note:**
> Longer advertising intervals usually result in longer discovery and connect times, but may lower accessory power consumption.

2024-05-13 | Copyright © 2024 Apple Inc. All Rights Reserved.

51.6 Connection Parameters

If both the Central and Peripheral support the Connection Parameters Request procedure, then either shall use the procedure. The device will not read or use the parameters in the Peripheral Preferred Connection Parameters characteristic. See the *Bluetooth 5.3 Specification* Volume 6, Part B, Section 5.1.1 Connection Update procedure for details.

Connection parameter requests may be rejected if they do not meet the guidelines in this section.

General connection parameter request guidelines:

- Peripheral Latency ≤ 30 connection intervals.
- Supervision Timeout from 6 seconds to 18 seconds.
- Interval Min ≥ 15 ms.
- Interval Min ≤ 2 seconds.
- Interval Min is a multiple of 15 ms.
- One of the following:
  - Interval Max at least 15 ms greater than Interval Min.
  - Interval Max and Interval Min are both 15 ms.
- Interval Max * (Peripheral Latency + 1) of 6 seconds or less.
- Supervision Timeout greater than Interval Max * (Peripheral Latency + 1) * 3.

If Bluetooth Low Energy HID is one of the connected services of an accessory, a connection interval down to 11.25 ms may be accepted by some devices.

> **Note:**
> When Interval Max and Interval Min are both 15 ms, some devices (such as Apple Watch) will offer a 30 ms interval to better balance power and performance constraints.

Apple Watch connection parameter request guidelines:

- Interval Min ≥ 30 ms.
- Interval Min is a multiple of 30 ms.
- One of the following:
  - Interval Max at least 30 ms greater than Interval Min.
  - Interval Max and Interval Min are both 30 ms.

51.7 Data Packet Length Extension

Data Packet Length Extension increases the maximum data length from 27 to 251. Using larger per-packet data lengths improves radio efficiency, greatly increasing application data rates and boosting battery life. See the *Bluetooth 5.0* specification, Volume 6, Part B, Section 4.6.6 for details.

2024-05-13 | Copyright © 2024 Apple Inc. All Rights Reserved.

Figure 51-1 Data Packet Length Extension

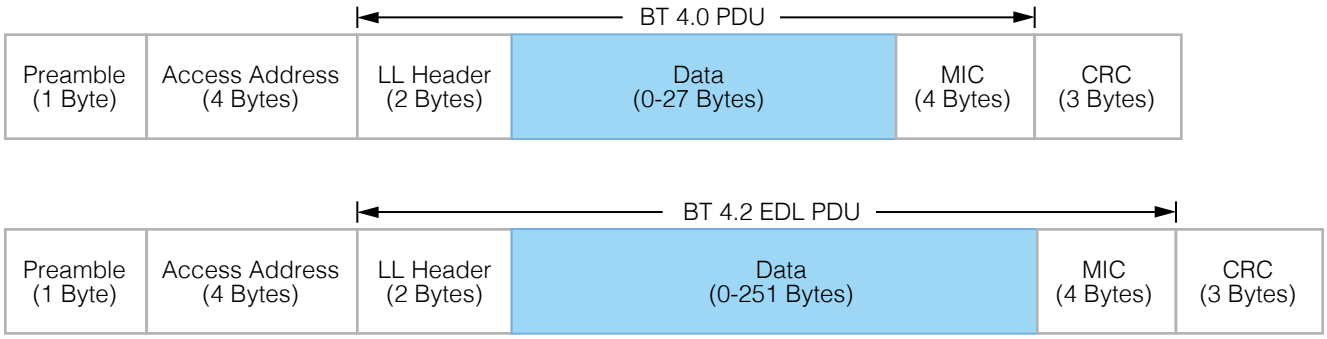

Accessories should support Data Packet Length Extension for best performance with devices.

iOS devices and Mac computers operating as the Central will negotiate optimal data packet lengths based on various factors, such as connection event length, system topology, and protocol.

51.8 Privacy

The accessory should be able to resolve a Resolvable Private Address in all situations. Due to privacy concerns, the device will use a Random Device Address as defined in the *Bluetooth 4.0* specification, Volume 3, Part C, Section 10.8.

51.9 Permissions

The accessory should not require special permissions, such as pairing, authentication, or encryption to discover services and characteristics. It may require special permissions only for access to a characteristic value or a descriptor value. See the *Bluetooth 4.0* specification, Volume 3, Part G, Section 8.1, fifth paragraph.

51.10 Pairing

The accessory should not request pairing until an ATT request is rejected using the Insufficient Authentication error code. See the *Bluetooth 4.0* specification, Volume 3, Part F, Section 4 for details.

If, for security reasons, the accessory requires a bonded relationship with the Central, the Peripheral should reject the ATT request using the Insufficient Authentication error code, as appropriate. As a result, the device may proceed with the necessary security procedures.

2024-05-13 | Copyright © 2024 Apple Inc. All Rights Reserved.

Similarly, if the device acts as a Central and a GATT server, it may reject an ATT request using the Insufficient Authentication error code. The accessory should initiate the security procedure for pairing in response.

Pairing may require user authorization depending on device. Once an accessory is paired with a device, the accessory shall retain the distributed keys of both central and peripheral for future use. If the pairing is no longer required, the accessory shall delete both sets of keys.

51.11 MTU Size

An accessory supporting packet length extension shall perform the packet length update procedure before performing the Exchange MTU Request handshake, see Data Packet Length Extension (page 229).

Devices will support and request an MTU size larger than the default during the Exchange MTU Request handshake. See the *Bluetooth 4.0* specification, Volume 3, Part F, Section 3.2.8.

When operating as ATT client, the device will request the optimal MTU size based on factors such as the Bluetooth topology, connection event length, maximum data length, and protocol (GATT or connection-oriented L2CAP).

An accessory operating as ATT server should select an MTU equal to or greater than the device's MTU request.

51.12 Services

51.12.1 Generic Access Profile Service

The accessory should implement the Device Name characteristic per the *Bluetooth 4.0* specification, Volume 3, Part C, Section 12.1. The Device Name characteristic should be writeable.

51.12.2 Generic Attribute Profile Service

The accessory shall implement the Service Changed characteristic only if the accessory has the ability to change its services during its lifetime.

The device may use the Service Changed characteristic to determine if it can rely on previously read (cached) information from the device. See the *Bluetooth 4.0* specification, Volume 3, Part G, Section 7.1.

2024-05-13 | Copyright © 2024 Apple Inc. All Rights Reserved.

51.12.3 Device Information Service

The accessory shall implement the Device Information Service. The service UUID for this service should not be advertised in the Advertising Data. The following characteristics should be supported:

- Manufacturer Name String (26 characters maximum).
- Model Number String (26 characters maximum).
- Firmware Revision String
- Software Revision String

51.12.4 Available Services

With iOS 7.0, any device makes Battery Service, Current Time Service and Apple Notification Center Service (ANCS) available to an accessory. The Current Time Service supports the current time and local time information characteristics. The service does not provide an "Adjust Reason" when the current time changes. ANCS uses `7905F431-B5CE-4E99-A40F-4B1E122D00D0` as its UUID.

These services are not guaranteed to be available immediately after connection and the accessory shall support Characteristic Value Indication of the Service Changed characteristic (see *Bluetooth 4.0* specification, Volume 3, Part G, Section 7.1) to be notified when the services become available. The device will maintain a connection to an accessory as long as it is paired and uses one of the available services.

51.13 GATT Server

With iOS 6.0, applications may contribute services and characteristics to the GATT server the device makes available to the accessory. The recommendations in this section apply to the accessory in this case.

The following services are implemented internally by iOS and shall not be published by third-party iOS applications:

- Generic Attribute Profile Service
- Generic Access Profile Service
- Bluetooth Low Energy HID Service
- Battery Service
- Current Time Service
- Apple Notification Center Service

The device implements the GAP Service Changed characteristic, because the database contents can change at any time. The accessory should therefore support the Characteristic Value Indication of this characteristic and, upon receiving indications, invalidate its database cache accordingly. See the *Bluetooth 4.0* specification, Volume 3, Part G, Section 7.1.

2024-05-13 | Copyright © 2024 Apple Inc. All Rights Reserved.

The accessory should minimize the use of ATT/GATT requests and commands and only send what is necessary. For example, do not use GATT Discover All Services when the accessory is looking for specific services. Use Discover Primary Service By Service UUID instead. Less airtime equals less power consumption and better performance for both the accessory and the device.

When third-party iOS applications discover services on the accessory, the following services are used internally by iOS and are filtered out from the list of discovered services:

- Generic Attribute Profile Service
- Generic Access Profile Service
- Bluetooth Low Energy HID Service
- Apple Notification Center Service

The accessory should be robust enough to handle any error gracefully. Pairing and Characteristic Value reads/writes may fail if the application owning the service is not in the foreground and is not entitled to run in the background.

If an ATT Prepare Write Request is used, all queued attributes are contained within the same GATT Service.

2024-05-13 | Copyright © 2024 Apple Inc. All Rights Reserved.

Modules

52. Apple USB-C Analog Headset Module

The Apple USB-C Analog Headset Module (C125) may be used to create USB-IF compliant Headsets (page 82) supporting up to 24-bit/384 kHz stereo and up to 24-bit/48 kHz mono (microphone) audio. C125 supports Apple Music Lossless and Hi-Res Lossless.

Figure 52-1 USB-C Analog Headset Module (C125)

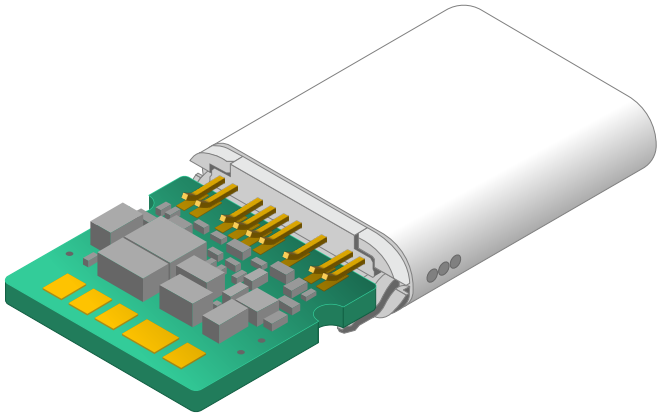

52.1 Overview

C125 is a USB-IF compliant USB Audio Device Class 2.0 and 3.0 codec with an integrated USB-C plug.

C125 supports:

- 16-bit and 24-bit samples.
- 44.1 kHz, 48 kHz, 88.2 kHz, 96 kHz stereo headphone-level output.
- Optional:
  - 176.4 kHz, 192 kHz, 384 kHz stereo headphone-level output.
  - 7-band output EQ.
- 44.1 kHz, 48 kHz mono microphone input.
- Optional:
  - 7-band microphone input EQ.
  - 3-band sidetone EQ.
- Volume Up, Volume Down, and Center buttons.

2024-05-13 | Copyright © 2024 Apple Inc. All Rights Reserved.

C125 does not support USB-C to 3.5 mm headset jack adapters.

52.1.1 Additional Specifications & Support

Additional software and support for C125 is available from Cirrus Logic, Inc.

Get started at https://www.cirrus.com/support/c125/.

52.1.2 Procurement

The C125 is available at https://c125.proscalnext.com/:

Variant	Part Number
C125	AB23169-1A033-AH

52.2 Mechanical

C125 has the following mechanical characteristics:

- Integrated USB-C connector.
- Not encapsulated.
- -20 °C to 65 °C working temperature range.

See C125 Dimensions (page 240) for dimensional drawing.

C125 headsets shall:

- Meet the requirements for USB-C connector integration, see Mechanical (page 263).
- Encapsulate both sides of C125.

52.2.1 Shielding

C125 headsets shall:

- Protect the C125 electronic components with a SUS shield.
- Laser weld the SUS shield to the C125 ground ring.

2024-05-13 | Copyright © 2024 Apple Inc. All Rights Reserved.

Figure 52-2 C125 recommended three-part shield design

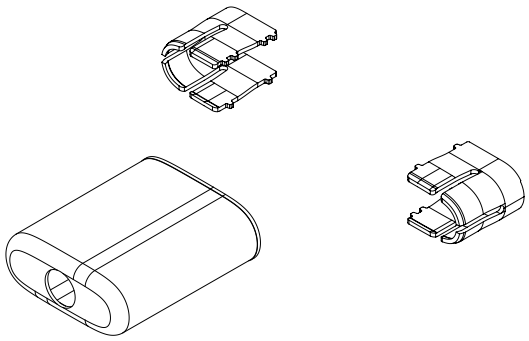

Apple recommends the following three-part shield design as shown in Figure 52-2 (page 237) for C125:

- C125 Recommended Clamshell Shields (page 241)
- C125 Recommended Rear Shield (page 242)

52.3 Pad Assignments

Figure 52-3 (page 237) and Table 52-1 (page 238) detail the layout, names, description, and assignments of the C125 pads.

Figure 52-3 C125 pads

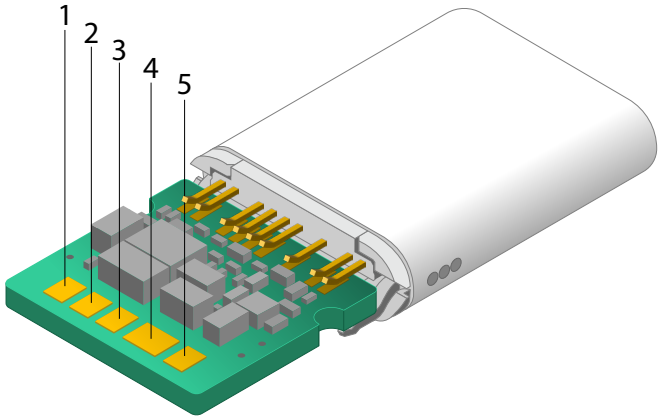

2024-05-13 | Copyright © 2024 Apple Inc. All Rights Reserved.

Table 52-1 C125 pad assignments

Pad	Name	Assignments
1	Left Driver	Left Driver
2	Microphone Bias	Microphone Bias
3	Reserved	NC
4	Ground	Right Return, Left Return, Microphone Return
5	Right Driver	Right Driver

52.4 Electrical

C125 headsets shall incorporate the Headset Remote and Microphone Transmitter (page 244).

The C125 shield may be treated as an electrical ground.

52.4.1 DAC Characteristics

The C125 DAC receives lossless 24-bit stereo audio from the device.

Table 52-2 C125 DAC characteristics, 24-bit/96 kHz mode

Driver	Parameter	Typical
32 Ω, 1 nF	Dynamic range (A-weighted)	117 dBA
	THD+N (FS = 48 kHz, BW = 20 kHz)	-91 dB
	Full-scale output voltage	2.4 V_{PP}
	Output power	22.6 mW
16 Ω, 1 nF	Dynamic range (A-weighted)	112 dB
	THD+N (FS = 48 kHz, BW = 20 kHz)	-83 dB
	Full-scale output voltage	1.3 V_{PP}
	Output power	14.2 mW

Table 52-3 C125 DAC characteristics, 24-bit/384 kHz mode

Driver	Parameter	Typical
32 Ω, 500 pF	Dynamic range (A-weighted)	117 dBA
	THD+N (FS = 48 kHz, BW = 20 kHz)	-91 dB

2024-05-13 | Copyright © 2024 Apple Inc. All Rights Reserved.

Driver	Parameter	Typical
	THD+N (FS = 192 kHz, BW = 80 kHz)	-90 dB
	Full-scale output voltage	2.4 V_{PP}
	Output power	22.6 mW
16 Ω, 500 pF	Dynamic range (A-weighted)	112 dB
	THD+N (FS = 48 kHz, BW = 20 kHz)	-84 dB
	THD+N (FS = 192 kHz, BW = 80 kHz)	-83 dB
	Full-scale output voltage	1.3 V_{PP}
	Output power	14.2 mW

The characteristics in Table 52-2 (page 238) and Table 52-3 (page 238) were measured under the following conditions:

- Left Driver, Right Driver, and Ground pads on C125 connected to a load and an audio analyzer, such as the Audio Precision APx series.
- Microphone Bias pad connected to the Ground pad.
- Full-scale 1 kHz sine wave input test signal.

2024-05-13 | Copyright © 2024 Apple Inc. All Rights Reserved.

52.5 C125 Dimensions

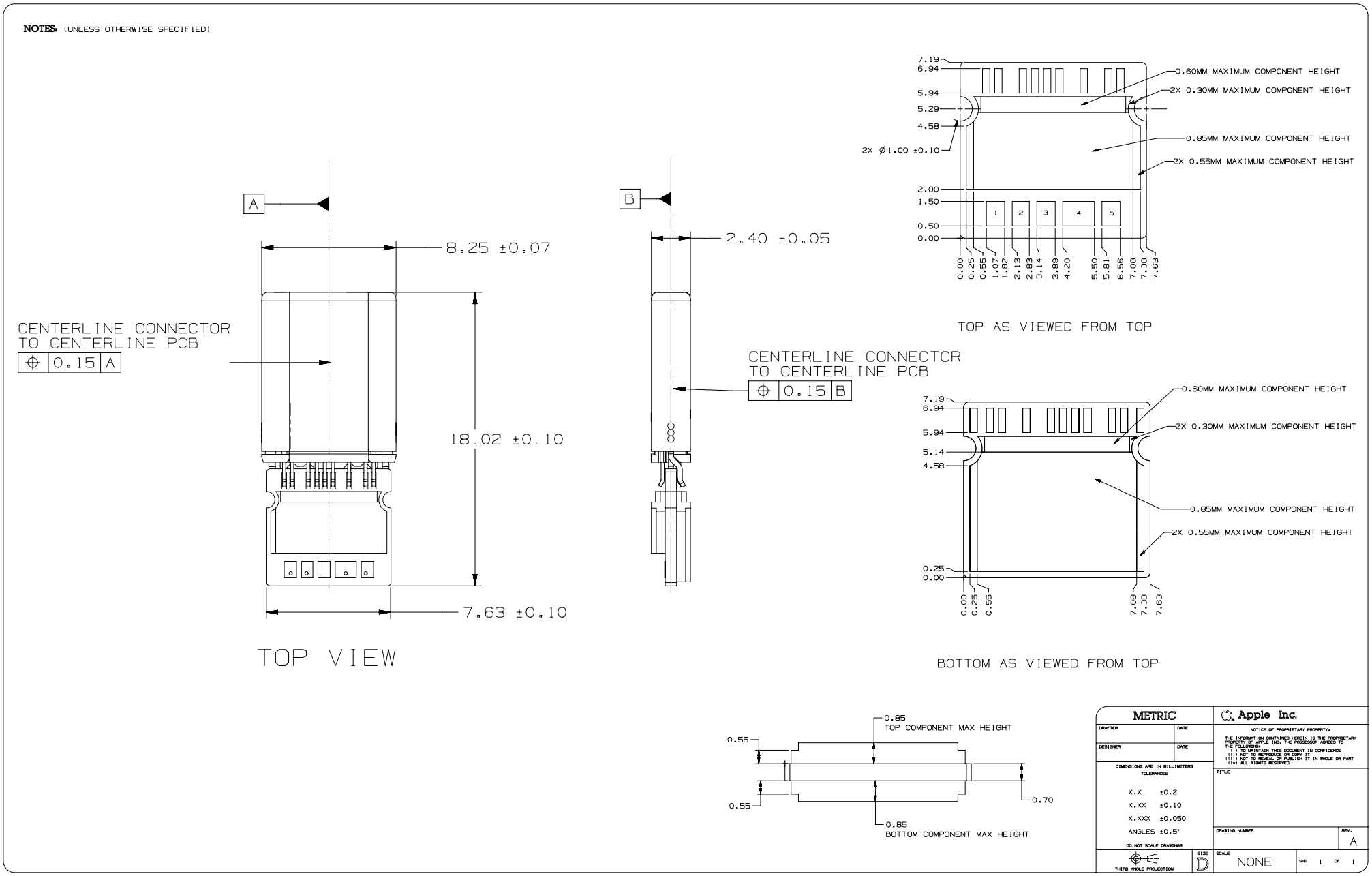

52.6 C125 Recommended Clamshell Shields

NOTES: (UNLESS OTHERWISE SPECIFIED)

1. ALL DIMENSIONS AND TOLERANCES APPLY PER ASME Y14.5M, 1994. IT IS EXPECTED THAT THE SUPPLIER UNDERSTAND AND COMPLY WITH ALL TOLERANCES AS DESCRIBED IN THIS STANDARD AND APPLIED TO THIS DRAWING.
2. DIMENSIONS ARE MEASURED AFTER PLATING.
3. ALL DIMENSIONS THAT LOCATE GEOMETRICAL TOLERANCE FEATURES (PROFILE AND POSITION CHARACTERISTICS) ARE CONSIDERED BASIC AS DEFINED IN THE ASME Y14.5M, 1994 STANDARD.
4. WHEN DATUMS ARE SPECIFIED ON A DRAWING, DIMENSIONS ARE RELATED TO DATUM A (AS THE PRIMARY DATUM), DATUM B (SECONDARY), AND DATUM C (TERTIARY).
5. PERFECT ORIENTATION AND/OR PERFECT LOCATION AT MMC REQUIRED FOR THE INTERRELATIONSHIP OF ALL DATUM FEATURES OF SIZE, UNLESS OTHERWISE SPECIFIED ON DRAWING.
6. UNLESS OTHERWISE SPECIFIED, ALL SURFACES TO BE WITHIN A SURFACE PROFILE TOLERANCE OF ⌓ 0.1 A B C.
7. ALL BURRS TO BE LESS THAN 0.02 mm.
8. BREAK ALL EDGES 0.05 mm R UNLESS SPECIFIED.
9. PART NEEDS TO SURVIVE 8HR SALT SPRAY TEST.
10. MATERIAL: SUS304-1/2H, 0.25mm THK
11. FINISH: 2-5 μm NICKEL PLATING PER AMS QQ-N-290
12. ALL PLATING TO OCCUR AFTER PART STAMPING AND FORMING

[13] BURRS SHALL BE SUBFLUSH TO DATUM A

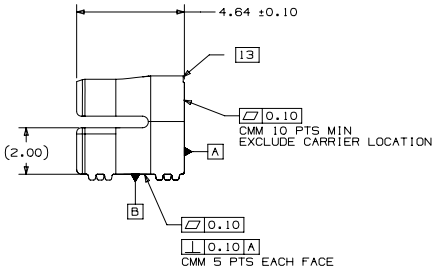

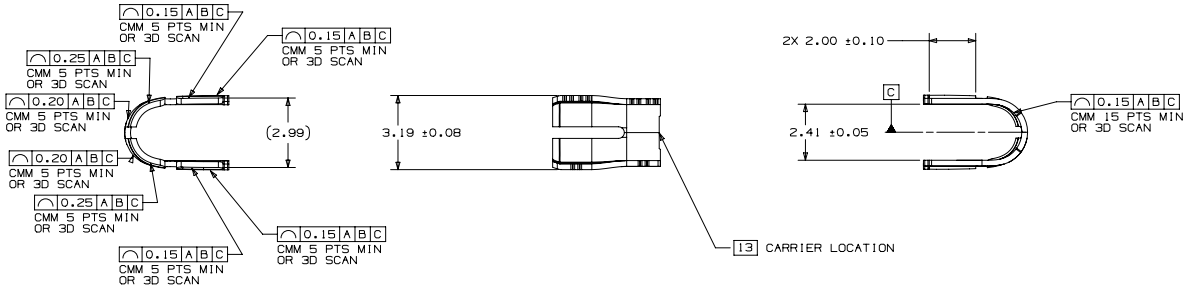

METRIC	Apple Inc.
DRAWTER / DATE	NOTICE OF PROPRIETARY PROPERTY: THE INFORMATION CONTAINED HEREIN IS THE PROPRIETARY PROPERTY OF APPLE INC. THE POSSESSOR AGREES TO THE FOLLOWING: (i) TO MAINTAIN THIS DOCUMENT IN CONFIDENCE (ii) NOT TO REPRODUCE OR COPY IT (iii) NOT TO REVEAL OR PUBLISH IT IN WHOLE OR PART (iv) ALL RIGHTS RESERVED
DESIGNER / DATE	
DIMENSIONS ARE IN MILLIMETERS TOLERANCES	TITLE
DO NOT SCALE DRAWINGS	DRAWING NUMBER / REV.
THIRD ANGLE PROJECTION / SIZE D	SCALE NONE / SHT 1 OF 1

NX GENERATED

Copyright © 2024 Apple Inc. All Rights Reserved.

52.7 C125 Recommended Rear Shield

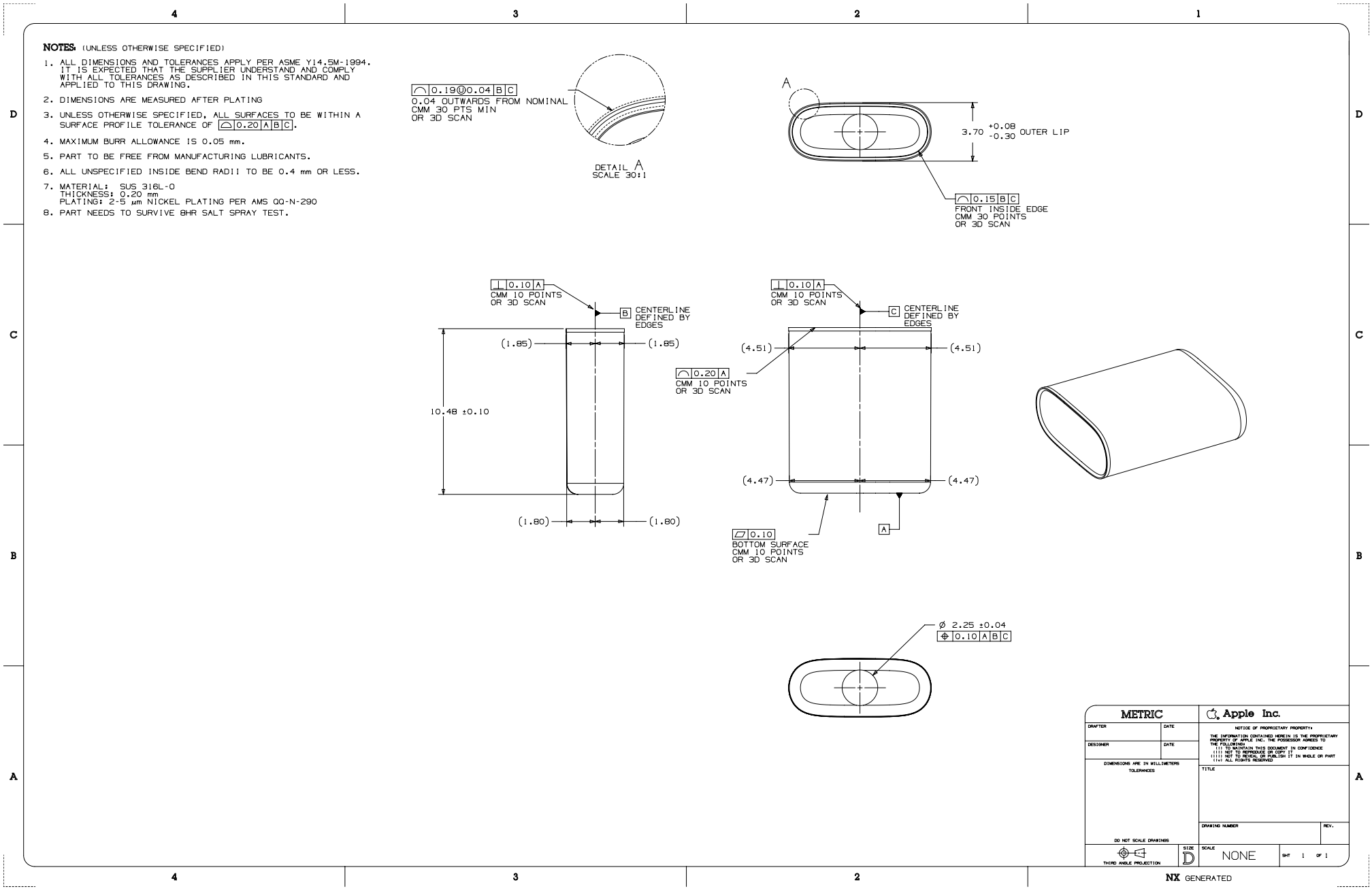

Components

53. Headset Remote and Microphone Transmitter

Devices can receive button press information from Headsets (page 82) incorporating a Headset Remote and Microphone Transmitter using the Apple USB-C Analog Headset Module (page 235).

53.1 Overview

A Headset Remote and Microphone Transmitter is a component transmitting Volume Up, Volume Down, and Center button controls over the microphone bias to a C125. This chapter defines how the component shall behave.

Subjective listening tests with the latest devices are recommended to determine which part produces the best user experience.

53.2 Requirements

Accessories implementing the Headset Remote and Microphone Transmitter shall comply with the following requirements:

- Headsets shall integrate a MEMS analog microphone.
- The remote microphone shall be located 120-160 mm from the center of a headset driver when worn by the user.
- There shall be six wires originating from the plug attaching the device to the headset, carrying the corresponding signals:
  - Right Driver
  - Right Return
  - Left Driver
  - Left Return
  - Microphone Bias
  - Microphone Return
- Signals shall run independently to their respective components.
- There shall be three physical remote buttons for Volume Up, Volume Down, and Center button functions.

Headset drivers shall have:

- A minimum load impedance of 16 Ω.

2024-05-13 | Copyright © 2024 Apple Inc. All Rights Reserved.

- A maximum load capacitance of 150 pF.

Headsets shall implement one of the following configurations. The microphone and remote buttons may be located on either the left or right side of the headset.

2024-05-13 | Copyright © 2024 Apple Inc. All Rights Reserved.

Figure 53-1 USB-C Analog Headset Module (C125) example A

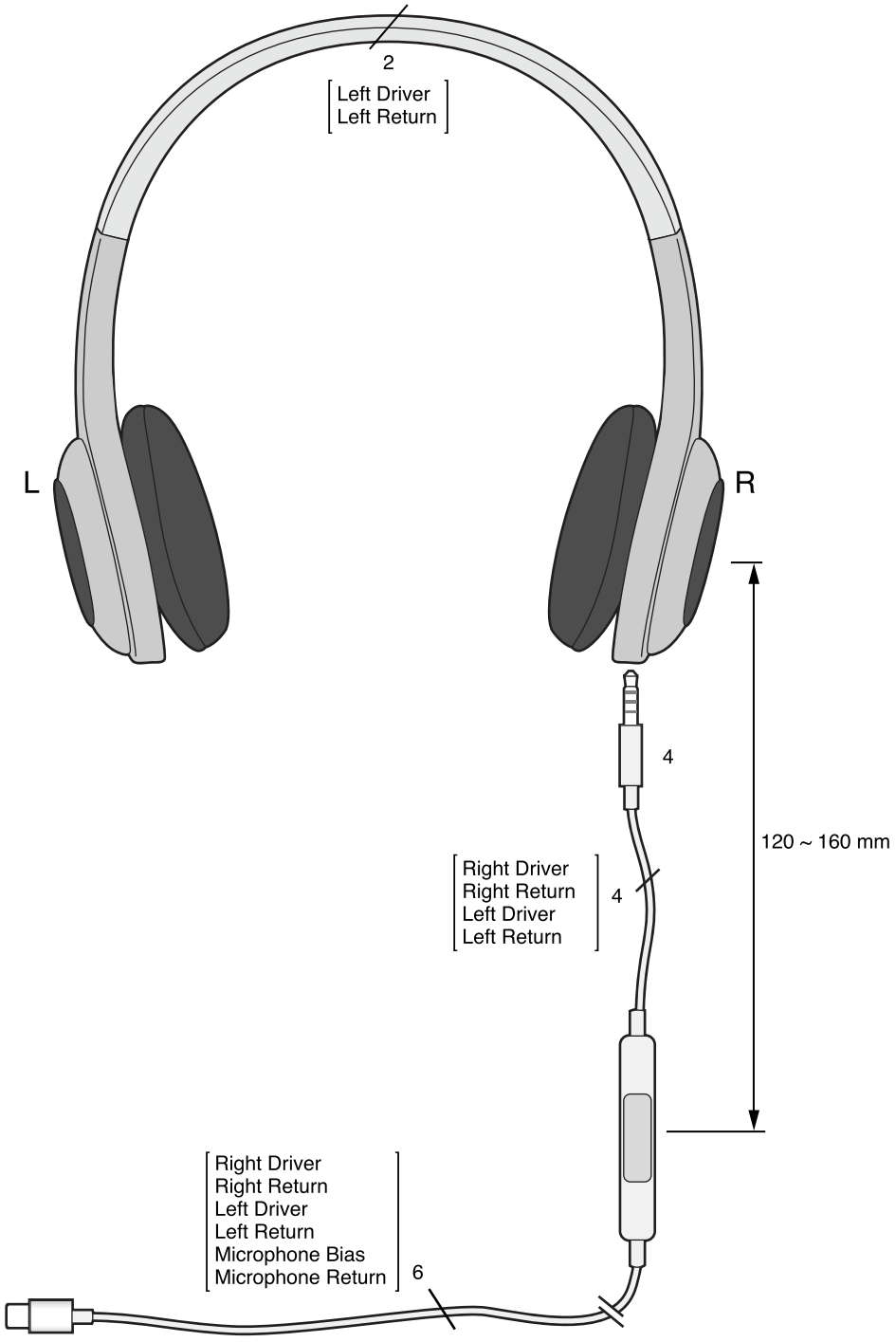

2024-05-13 | Copyright © 2024 Apple Inc. All Rights Reserved.

Figure 53-2 USB-C Analog Headset Module (C125) example B

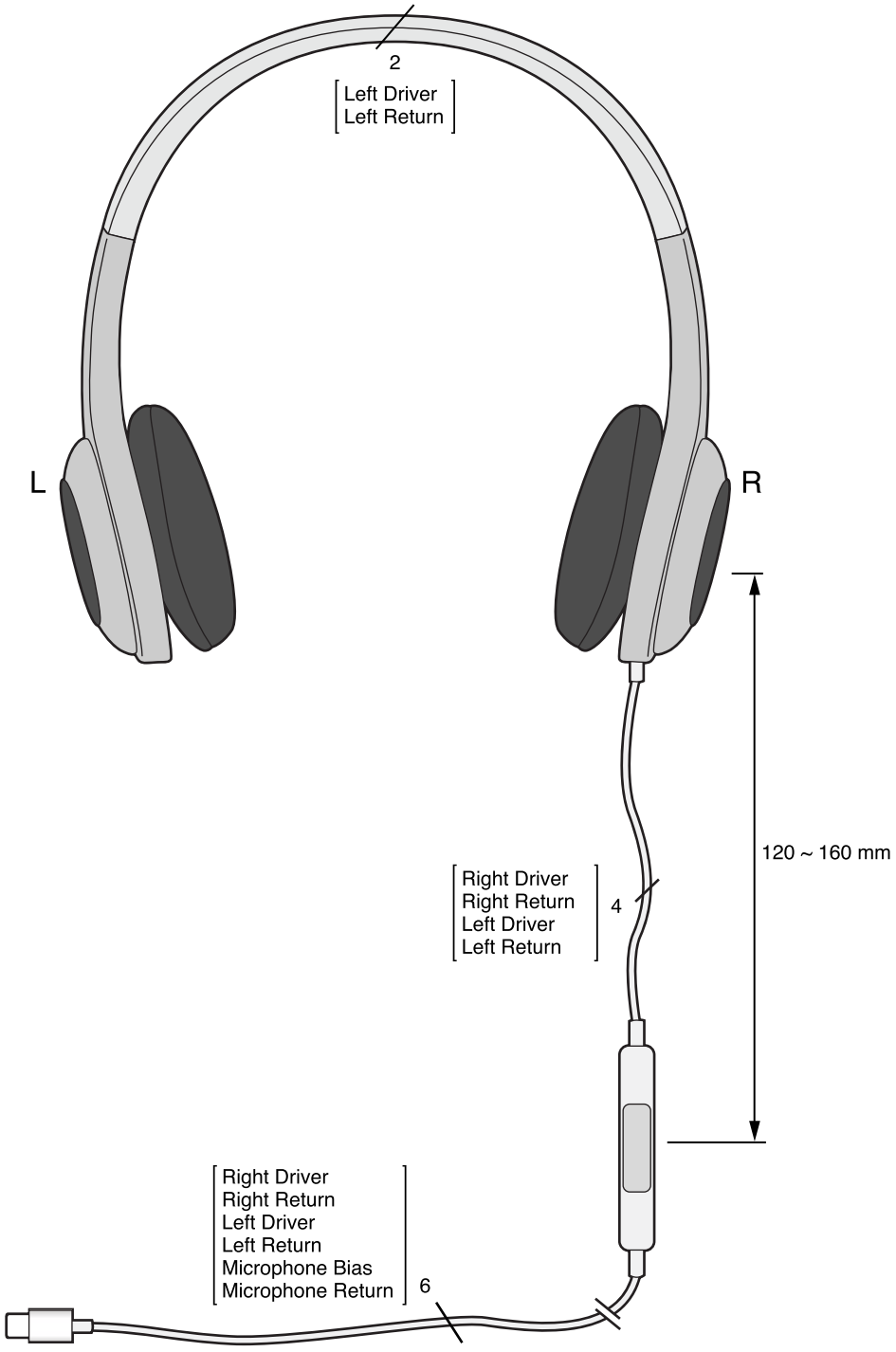

2024-05-13 | Copyright © 2024 Apple Inc. All Rights Reserved.

Figure 53-3 USB-C Analog Headset Module (C125) example C

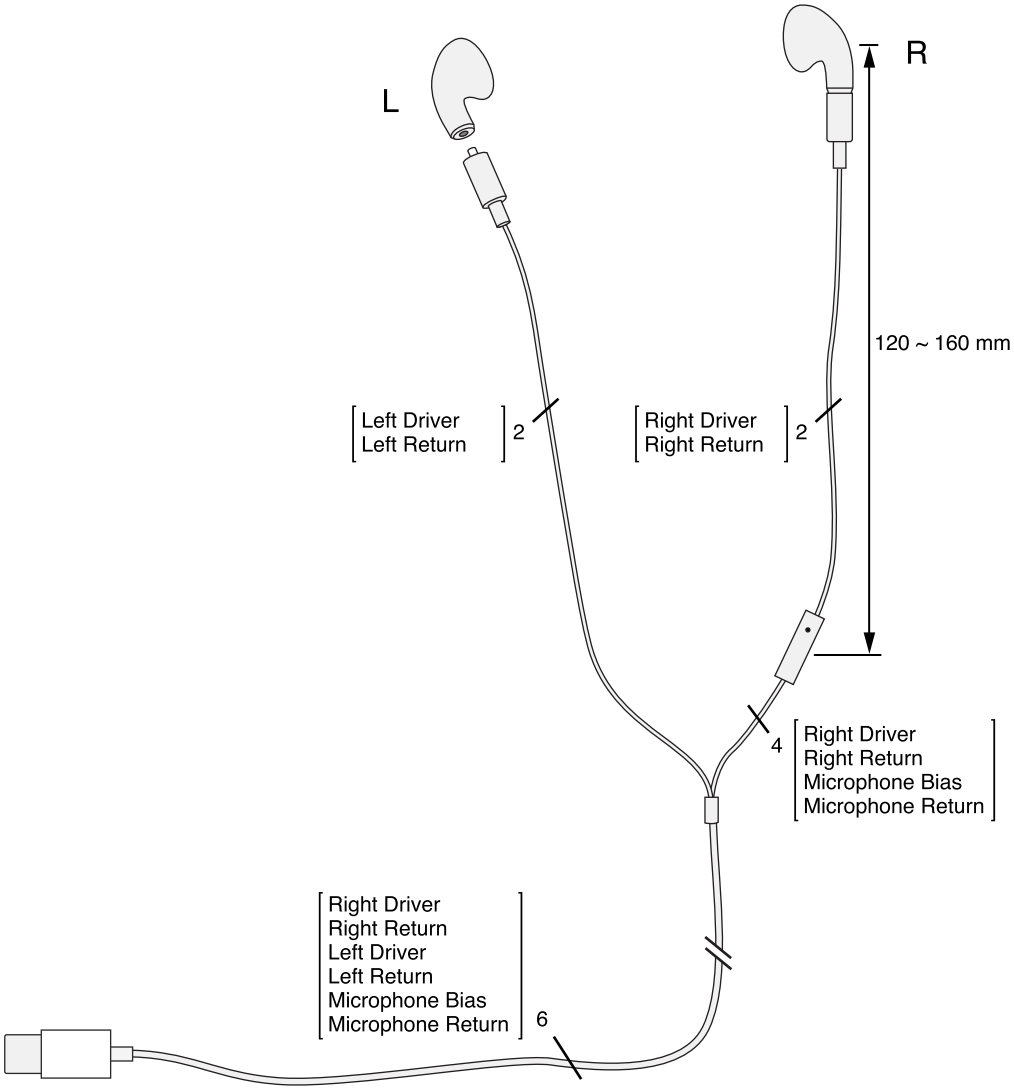

Copyright © 2024 Apple Inc. All Rights Reserved.

Figure 53-4 USB-C Analog Headset Module (C125) example D

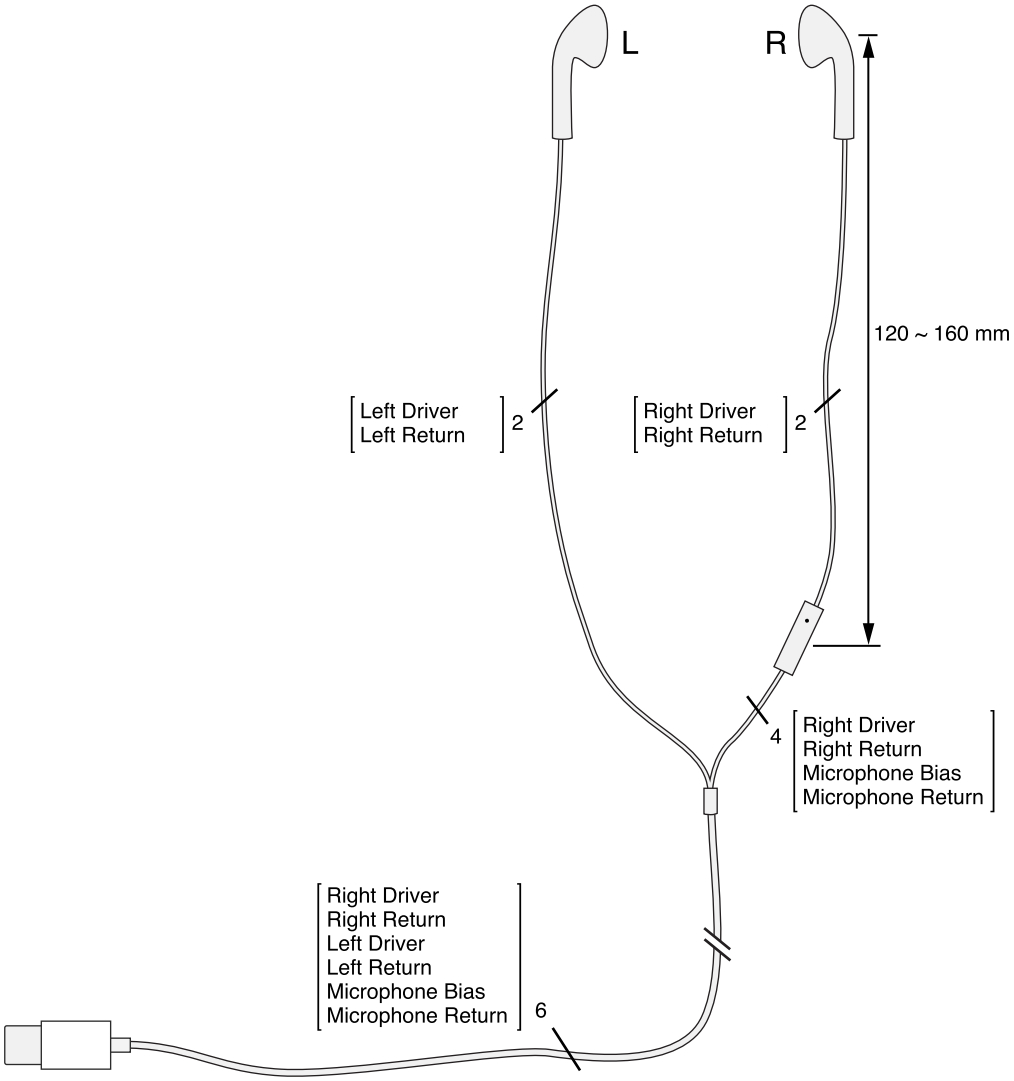

53.3 Usage

The transmitter operates with a receiver in C125 to enable remote button press detection using the microphone bias line. The C125 provides regulated downstream power (nominally 2.7 V or 2.0 V) to the transmitter and MEMS microphone through the microphone bias line, and the C125 decodes the button information from the transmitter.

The transmitter sends button press state over the microphone bias line in either:

- Button mode.
- Tone mode.

2024-05-13 | Copyright © 2024 Apple Inc. All Rights Reserved.

If the voltage on the microphone bias line is less than 2.35 V, the microphone is not in use. The transmitter enters button mode and sends button-press information as discrete voltage levels.

If the voltage on the microphone bias line greater than 2.35 V, the microphone is in use. The transmitter enters tone mode and sends button-press information as ultrasonic tone sequences in the range of 99 kHz to 300 kHz.

53.3.1 Pin Assignments

Table 53-1 Pin Assignments

Name	I/O	Description
TONE	Output	Tone generator output
GND	Power	Audio return
MIC	Input	Microphone bias
REM	Input/output	Remote switch network
VSHUNT	Input	Shunt regulator supply
MICPWR	Output	Microphone power

53.3.2 Maximum Voltage and Current Ratings

Table 53-2 (page 250) lists the transmitter's maximum voltage and current ratings while operating over a free-air temperature range (T_A) of -40 °C to +85 °C.

Voltages are measured with respect to ground. Input and output clamp-current ratings shall be observed.

Table 53-2 Maximum Voltage and Current Ratings

Symbol	Description	Minimum	Maximum
V_{SUPPLY}	Supply voltage, VSHUNT, MIC	-0.5 V	4.6 V
V_I	Input voltage, REM	-0.5 V	4.6 V
V_O	Output voltage, MICPWR, TONE	-0.5 V	4.6 V
I_{IK}	Input clamp current, REM (V_I < 0)	-20 mA	
I_{OK}	Output clamp current, MICPWR, TONE (V_O < 0)	-20 mA	
I_{SUPPLY}, I_{GND}	Continuous current through VSHUNT, MIC, or GND	-50 mA	50 mA

2024-05-13 | Copyright © 2024 Apple Inc. All Rights Reserved.

53.3.3 Electrical Characteristics

Table 53-3 (page 251), Table 53-4 (page 252), and Table 53-5 (page 252) list the transmitter's electrical and timing characteristics under the following conditions:

- Operating temperature = -40 °C to +85 °C.
- MIC is connected to $V_{MICBIAS}$ through a 2.21 kΩ ±1% resistor.
- Button mode, $V_{MICBIAS}$ = 1.8 to 2.1 V.
- Tone mode, $V_{MICBIAS}$ = 2.56 to 2.84 V.

The values in the Typical column of the tables are measured at 25 °C.

Table 53-3 Electrical characteristics (general)

Symbol	Parameter	Test Conditions	Minimum	Typical	Maximum
$I_{MICBIAS-B}$	Quiescent current into MIC+VSHUNT	Button mode, $V_{MICBIAS}$ = 2.1 V		3 µA	6 µA
$I_{MICBIAS-B}$	Quiescent current into MIC+VSHUNT	Button mode, $V_{MICBIAS}$ = 1.5 V		3 µA	6 µA
I_{MIC-T}	Quiescent current into MIC	Tone mode		34 µA	46 µA
$I_{VSHUNT-T}$	Quiescent current into VSHUNT	Tone mode (see note below)		60 µA	70 µA
I_{MIC-TA}	Active current into MIC	Tone mode		35 µA	45 µA
$I_{VSHUNT-TA}$	Active current into VSHUNT	(see note below)		104 µA	118 µA
V_{TR}	Tone mode threshold voltage	MIC rising (Microphone enable), V_{MICPWR} = 1.0 V	2.20 V	2.35 V	2.50 V
V_{TF}	Tone mode threshold voltage	MIC falling (Microphone disable), V_{MICPWR} = 400 mV	0.55 V	0.8 V	1 V
V_{MICPWR}	MICPWR output voltage	I_{MICPWR} = 120 - 150 µA	1.51 V	1.56 V	1.61 V
R_{SO}	Shunt regulator output impedance	Freq = 100 Hz	5 Ω	18 Ω	25 Ω
R_{SO}	Shunt regulator output impedance	Freq = 20 Hz	12 Ω	21 Ω	35 Ω
R_{ONA}	Switch A, R_{DSON}	Tone mode, I_{MICPWR} = 1 mA, $V_{MICBIAS}$ = 2.56 V		40 Ω	55 Ω
R_{ONB}	Switch B, R_{DSON}	V_{MIC} = 1.2 V, I_{REM} = 1 mA		22 Ω	30.5 Ω

2024-05-13 | Copyright © 2024 Apple Inc. All Rights Reserved.

Note:
This current is pulled through R_{VSHUNT} between MIC and VSHUNT and is the minimum current to keep VSHUNT regulated at 1.56 V. Excess current through R_{VSHUNT} is available to the load at MICPWR. Excess current not used by the load at MICPWR is internally shunted to GND.

Table 53-4 Electrical characteristics (tone mode)

Symbol	Parameter	Test Conditions	Minimum	Typical	Maximum
$e_{n\text{-}mic100}$	MIC integrated noise	100 Hz to 20 kHz		1.5 µVrms	2 µVrms
f_{TONE1}	Button 1 frequency	R_{REM} = 6.81 kΩ	109 kHz	130 kHz	159 kHz
f_{TONE2}	Button 2 frequency	R_{REM} = 9.42 kΩ	138 kHz	165 kHz	200 kHz
f_{REL}	Button released frequency		81 kHz	97 kHz	117 kHz
R_{BT1}	Button 1 boundary		6.61 kΩ	6.81 kΩ	7.01 kΩ
R_{BT2}	Button 2 boundary		9.33 kΩ	9.42 kΩ	9.51 kΩ
V_{TA}	Tone amplitude	R_{TONE} = 1 MΩ	350 mV	550 mV	720 mV
V_{TA}	Tone amplitude	R_{TONE} = 100 kΩ	300 mV	515 mV	710 mV

Table 53-5 Electrical characteristics (button mode)

Symbol	Parameter	Test Conditions	Minimum	Typical	Maximum
t_{ONA}	Switch A enable time	Time to turn on Switch A	0.8 ms	1.2 ms	2 ms
t_{OFFB}	Switch B disable time	Time to turn off Switch B	0.7 ms	1 ms	2 ms
t_{REG}	Shunt regulator enable time	Time from MIC = 2.3 V to MICPWR = 1.56 V	1 ms	2.5 ms	3.5 ms

53.3.4 Theory of Operation

The transmitter provides:

- An interface to a button switch-resistor network.
- Power for a colocated microphone.
- A tone generator for sending discrete frequency tones on the microphone bias line corresponding to button events.

2024-05-13 | Copyright © 2024 Apple Inc. All Rights Reserved.

The receiver provides regulated downstream power (nominally 2.7 or 2.0 V) to the transmitter and microphone through the microphone bias line. Figure 53-5 (page 253) illustrates the functional components of the transmitter. In this diagram, a latch drives the configuration of switches A and B. The power-on reset monitors voltage on the MIC pin to ensure there is a enough power before initiating the turn-on sequence; it shuts the transmitter down if there is insufficient voltage.

Figure 53-5 Block diagram

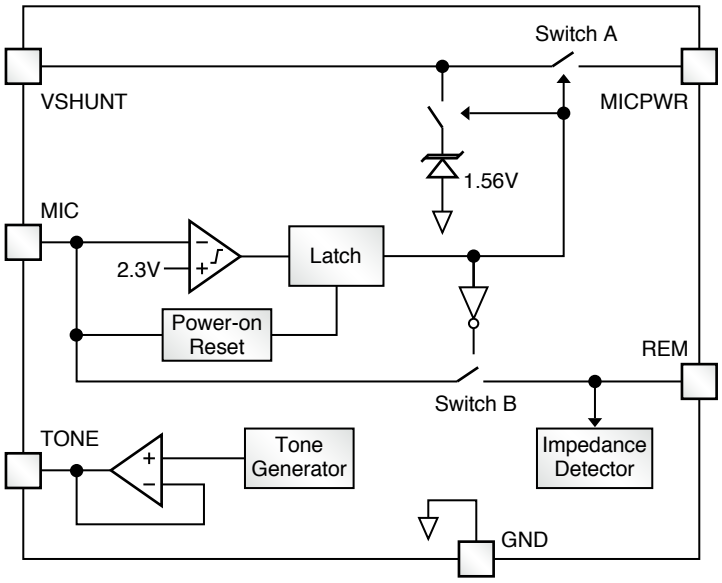

Button events are sent from the transmitter to the receiver in one of two modes, button mode or tone mode. When a microphone is not present or is not in use, the transmitter is put in button mode by the receiver, and button events are detected using discrete voltage levels. These discrete voltage levels are a percentage of a regulated output voltage on the microphone bias line. When a microphone is in use, the receiver puts the transmitter into tone mode by placing more than 2.35 V on the microphone bias line, and the transmitter then sends button events using tone sequences of discrete frequencies in the range 99 kHz to 300 kHz.

53.3.5 Button Mode

In button mode, the transmitter operates as a passthrough element switching a button switch-resistor network onto the bias line. Each switch represents a unique button. When a button is pressed, the DC level on the bias line is changed and detected by the receiver. Table 53-6 (page 254) shows the DETECT pin voltages with $V_{MICBIAS}$ = 2.0 V.

2024-05-13 | Copyright © 2024 Apple Inc. All Rights Reserved.

Table 53-6 DETECT Pin Voltages

Switch Closed	Voltage
S0	0.000 V ±1%
S1	1.510 V ±1%
S2	1.603 V ±1%

When the transmitter is in button mode (V_{MIC} has never reached 2.35 V), it shorts the MIC and REM pins together and disables all other inputs and outputs. When a button event occurs, the DC voltage on the microphone bias line changes. Table 53-6 (page 254) shows the DC voltage corresponding to a given button press when using the R1 and R4 resistor values listed in Table 53-7 (page 259). This DC level is then detected by the receiver. Switch S0 is a unique switch shorting the V_{MIC} line to ground.

When the V_{MIC} line is shorted to ground, power is removed from the transmitter. When power recovers, the transmitter enters button mode or tone mode, depending on the voltage detected at the MIC pin.

53.3.6 Tone Mode

When the transmitter detects a voltage greater than 2.35 V at the MIC pin, it enters tone mode. With a microphone biased and in use, the switch-resistor network used for button mode would cause large DC level shifts in the bias voltage. Such shifts would result in unwanted audible clicks or pops or would cause de-biasing of the microphone. To prevent this problem, when the transmitter enters tone mode it disconnects the switch-resistor network from the microphone bias line, enables the microphone using the FET switch, and engages the tone generation circuit shown in Figure 53-5 (page 253).

In tone mode the transmitter has two functions. First, it turns on the MEMS microphone by forcing a FET switch to ground. Second, it detects button events and places a discrete tone sequence onto the microphone bias line. The tone frequencies in each sequence are unique to each button press. The receiver detects the tones on the bias line and determines the corresponding button event.

The transmitter's startup timing when it enters tone mode is shown in Figure 53-6 (page 255). Values for the timing parameters are given in Table 53-4 (page 252).

2024-05-13 | Copyright © 2024 Apple Inc. All Rights Reserved.

Figure 53-6 Startup timing

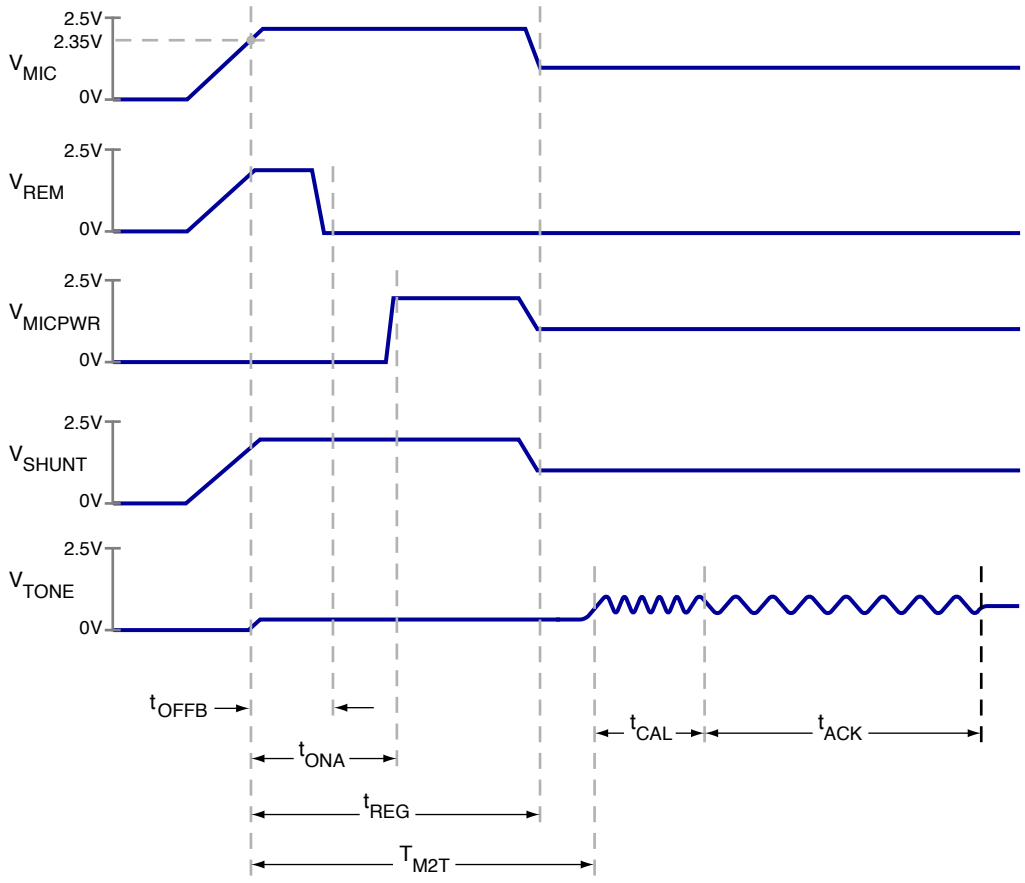

The tone mode startup sequence is as follows:

1. Upon detecting V_{MIC} > 2.35 V, the switch connecting the MIC and REM pins together is opened after time t_{OFFB}, see Figure 53-6 (page 255) and Table 53-4 (page 252).
2. After a delay of t_{REG} after V_{MIC} > 2.35 V, the SHUNT pin and the MICPWR pins are shorted. The microphone is enabled by turning on the FET switch through the MICPWR pin.
3. Once the noise prevention process has settled, the transmitter sends a preset acknowledge (ACK) tone sequence.
4. The receiver detects the ACK sequence, see Figure 53-7 (page 256), and authenticates the presence of the transmitter.

2024-05-13 | Copyright © 2024 Apple Inc. All Rights Reserved.

Figure 53-7 Tone mode ACK sequence

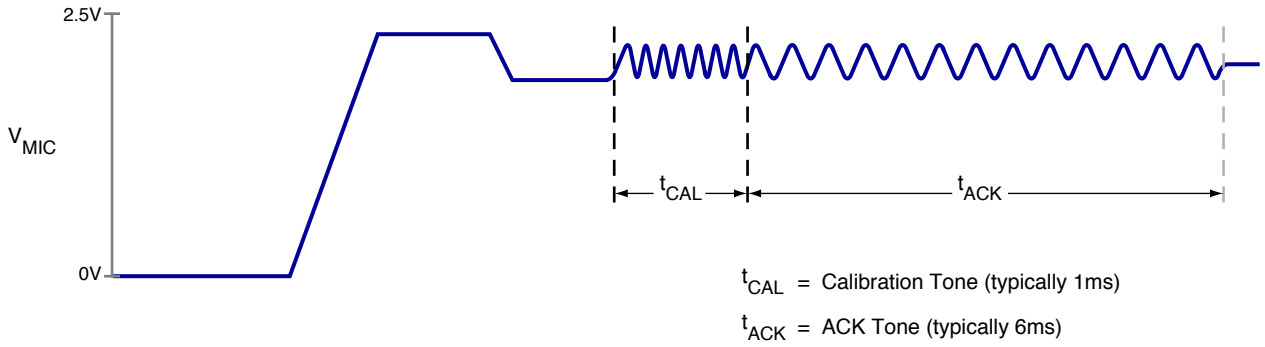

The tone generation circuit of the transmitter internally detects each button press and sends a high frequency tone sequence between 99 kHz and 300 kHz. The high frequency tone sequence is unique to each button. The receiver detects the frequency of each tone and translates it into a predetermined button event. A button release has a different frequency than a button press.

The transmitter sends two tones for each button press as shown in Figure 53-8 (page 257) to improve accuracy. The first tone, lasting 1 ms, is a calibration frequency and the second, lasting 2 ms, is the unique frequency for the selected button. The ratio of these two frequencies is calculated and translated into button press information. This provides a very accurate result independent of clock frequency variation.

2024-05-13 | Copyright © 2024 Apple Inc. All Rights Reserved.

Figure 53-8 Tone transmit/decode method

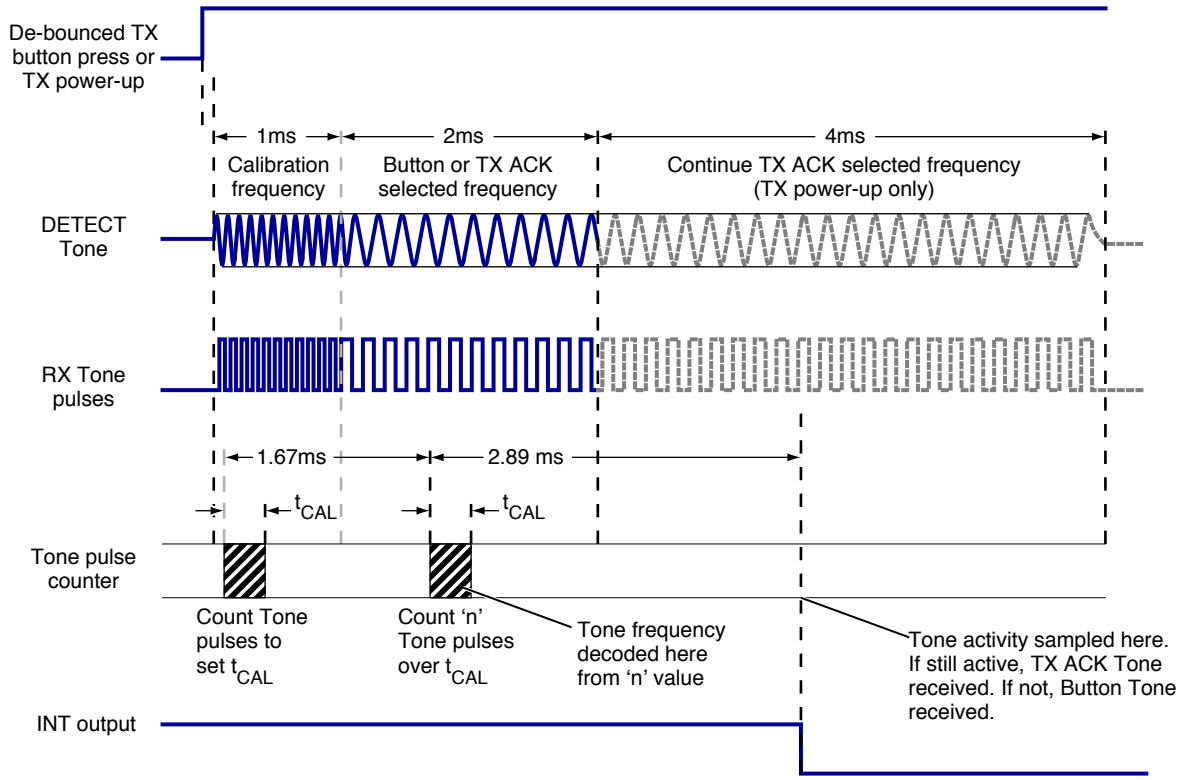

The transmitter remains in tone mode until the MIC pin is pulled below 0.8 V. When power recovers, the transmitter enters button mode or tone mode depending on the voltage detected at the MIC pin.

53.4 Button Detection Circuitry Usage

The circuits in the accessory supporting these components shall be those shown in Figure 53-9 (page 258) and Figure 53-10 (page 259). The nominal values of the components shown in these schematics are given in Table 53-7 (page 259).

These circuits are designed to produce a tone amplitude between the microphone bias line and the microphone return, at the end of a cable 1 meter long, of at least 30 mV peak-to-peak into a 2 kΩ load. If necessary, the value of R3 shall be adjusted to achieve this result. Figure 53-10 (page 259) shows how a voltage on the Microphone Power line from the transmitter enables the MEMS microphone chip through Q1. It also shows components R7, C4, and R8, which control the microphone frequency response. The equation determines the values of these components is given in Button Detection Circuitry Adjustments (page 260).

2024-05-13 | Copyright © 2024 Apple Inc. All Rights Reserved.

Figure 53-9 (page 258) and Figure 53-10 (page 259) are two parts of one circuit:

- The two microphone return lines shown in these sub-circuits shall be connected at the component locations.
- Their common return line and the return lines for each of the two drivers shall then be routed separately through the cable going to the device. The return lines shall be tied together only at the headset connector.

The above configuration minimizes crosstalk between the separate driver channels and the microphone.

Figure 53-9 Transmitter circuit

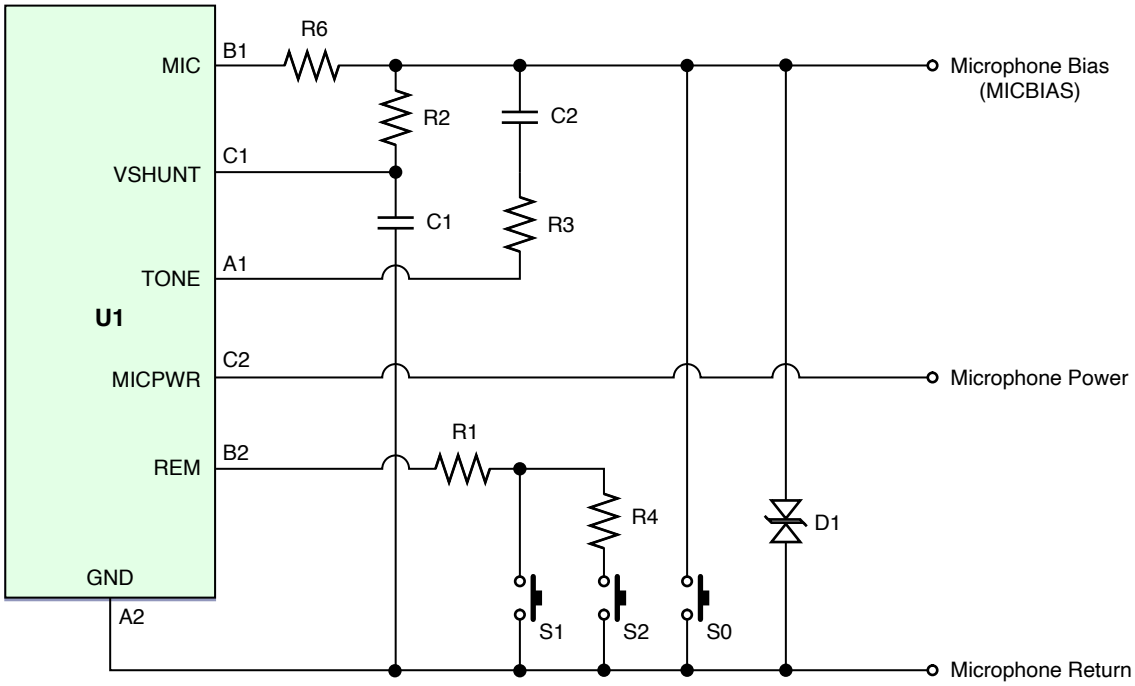

Figure 53-10 Microphone circuit

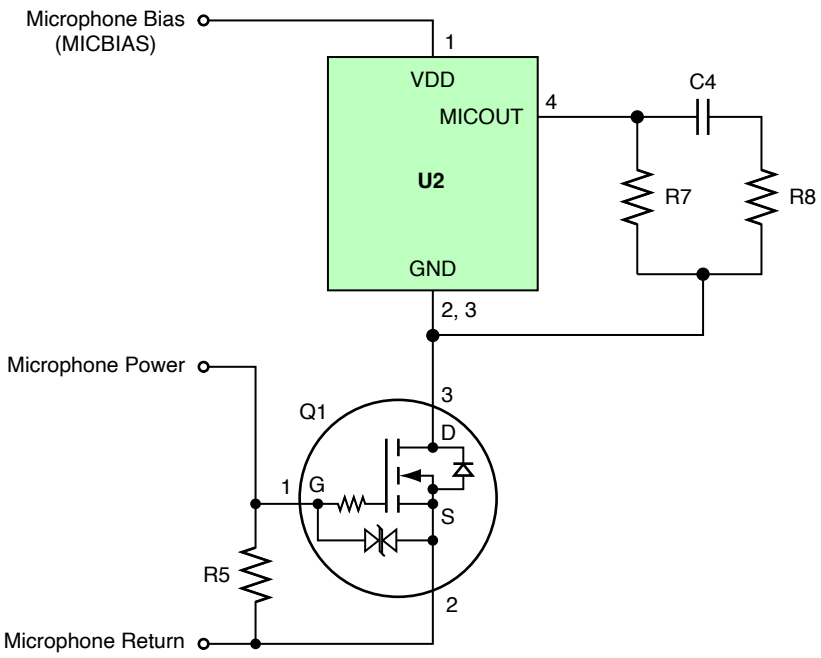

Table 53-7 Transmitter circuit components

Symbol	Description	Notes
C1	Capacitor, 0.1 µF ±10%, 6.3 V	
C2	Capacitor, 220 pF ±5%, 25 V	Ceramic
C4	Capacitor, 2.2 µF ±10%, 6.3 V	
D1	ESD protection diode, 5 pF, 6.1 V	ST Micro ESDALC6V1-1BU2; install as close to transmitter pin B1 as possible.
Q1	MOS field-effect transistor	CEDM 7001
R1	Resistor, 6.81 kΩ ±0.5%, 1/20 W	
R2	Resistor, 2 kΩ ±1%, 1/20 W	
R3	Resistor, 1.2 kΩ ±0.5%, 1/20 W	
R4	Resistor, 2.61 kΩ ±0.5%, 1/20 W	
R5	Resistor, 887 kΩ ±1%, 1/20 W	
R6	Resistor, 49.9 Ω +0.2%/-1%, 1/20 W	Shall not exceed 50 Ω.
R7	Resistor, 17.4 kΩ ±1%, 1/20 W	
R8	Resistor, value depends on U2.	See Additional Specifications & Support (page 236).
S0	Dome switch	Center button; shall not exceed 20 Ω when closed.
S1	Dome switch	Volume down; shall not exceed 20 Ω when closed.

2024-05-13 | Copyright © 2024 Apple Inc. All Rights Reserved.

Symbol	Description	Notes
S2	Dome switch	Volume up; shall not exceed 20 Ω when closed.
U1	Headset interface transmitter	Headset Remote and Microphone Transmitter
U2	MEMS analog microphone	See Additional Specifications & Support (page 236).

53.4.1 Button Detection Circuitry Adjustments

The values of some of the components listed in Table 53-7 (page 259) may be adjusted to optimize the performance of the headset accessory, using these formulas:

- **High-pass filter corner frequency in Hertz** $\approx 1/(2\pi \cdot R_8 \cdot C_4)$, where R_8 is the value of resistor R8 in ohms and C_4 is the value of capacitor C4 in Farads. This formula assumes the value of R7 is greater than the value of R8.
- **System sensitivity at 1 Pascal in Volts** = $(M_0/R_8) \cdot R_2$, where M_0 is the microphone sensitivity in Volts per Pascal, R_8 is the value of resistor R8 in ohms, and R_2 is the value of resistor R2 in ohms in parallel with 1.05 kΩ.
- **Maximum excursion of the microphone in Volts** = $(1/R_7) \cdot R_2$, where R_7 is the value of resistor R7 in ohms, and R_2 is the value of resistor R2 in ohms in parallel with 1.05 kΩ.

Note:
If the microphone bias voltage drops below 1.6 V, the transmitter will begin to fail and the microphone chip may produce indeterminate outputs.

Copyright © 2024 Apple Inc. All Rights Reserved.

Connectors

54. USB-A Receptacle

Accessories may incorporate a USB-A receptacle to:

- Provide power to a device.

54.1 Mechanical

The USB-A receptacle shall meet or exceed all applicable USB-IF mechanical specifications.

54.2 Electrical

The USB-A receptacle shall meet or exceed all applicable USB-IF electrical specifications.

2024-05-13 | Copyright © 2024 Apple Inc. All Rights Reserved.

55. USB-C Plug

Accessories incorporating a USB-C plug shall comply with the *USB Type-C Cable and Connector Specification, Release 2.3*.

Accessories may incorporate a USB-C plug to:

- Provide power to device.
- Draw power from USB Type-C Current sources.
- Draw power from USB Power Delivery sources.
- Draw power from USB Dedicated Charging Ports and USB hosts.

Accessories benefiting from integrating a USB-C plug include cables, headsets, battery packs, and adapters.

55.1 Overview

The USB-C plug shall have an assigned *Connector* Test ID from the USB-IF, see https://www.usb.org/products.

55.2 Mechanical

Accessories incorporating a USB-C plug shall comply with USB-C plug interface dimensions as specified in *USB Type-C Cable and Connector Specification, Release 2.3*.

USB-C plug enclosures shall not exceed the following dimensions as shown in Figure 55-1 (page 264):

- 'A' ≤ 12.35 mm.
- 'B' ≤ 6.50 mm.

2024-05-13 | Copyright © 2024 Apple Inc. All Rights Reserved.

Figure 55-1 USB-C plug example

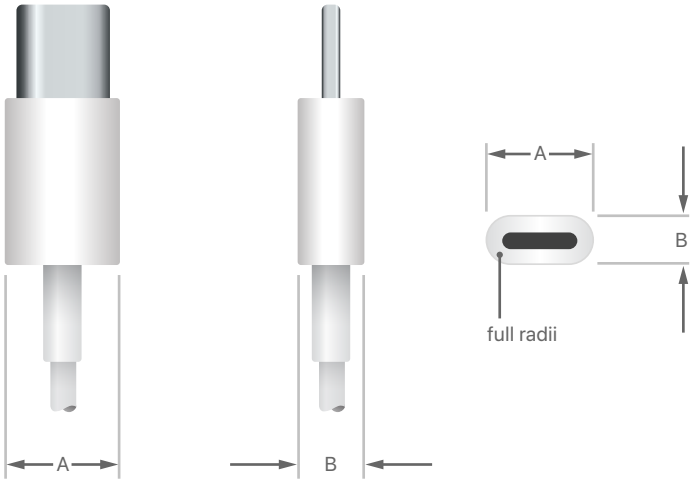

USB-C plug enclosures should have full radii rounded edges for the greatest compatibility with the widest variety of cases, see USB-C receptacle accessory keep-out (page 269).

55.3 Electrical

55.3.1 Drawing Power

Accessories drawing power from the USB-C plug shall:

- Correctly identify all USB Type-C Current (page 205) sources.
- Correctly identify all USB Dedicated Charging Ports (DCP) as defined in the *USB Battery Charging Specification, Release 1.2*.
- Enumerate as a USB device when connected to a USB host and:
  - Not draw more than 100 mA of current until they have been successfully enumerated.
  - Request no more than 500 mA of charging current in their USB device descriptor.
- Not draw more power than the USB power source claims it is capable of providing using one of the above methods.

Accessories may also correctly identify all USB Power Delivery (PD) (page 204) sources.

Accessories drawing power from a device may do so using one of the following protocols:

- USB Type-C Current (page 205)
- USB Power Delivery (PD) (page 204)

2024-05-13 | Copyright © 2024 Apple Inc. All Rights Reserved.

55.3.2 Providing Power

Accessories providing power to a device using a USB-C plug shall:

- Provide at least 15 W (3 A at 5.0 V) of power.
- Support USB Type-C Current (page 205).

The accessories should:

- Support USB Power Delivery (PD) (page 204).
- Label the receptacle indicating how much power is supplied in watts.

55.4 Test Procedures

USB-C plug test procedures are outlined in this section.

55.4.1 Mechanical

Verify the dimensions of the USB-C plug comply with interface dimensions.

55.4.2 Connector Test ID

Verify the accessory's USB-C plug has an assigned *Connector* Test ID from the USB-IF, see https://www.usb.org/products.

55.4.3 Drawing Power

This procedure applies to accessories drawing power using the USB-C plug.

The following equipment is necessary:

- Apple 140W USB-C Power Adapter
- Apple 96W USB-C Power Adapter
- Apple 70W USB-C Power Adapter
- Apple 67W USB-C Power Adapter
- Apple 30W USB-C Power Adapter
- Apple 20W USB-C Power Adapter
- Apple 35W Dual USB-C Port Compact Power Adapter
- Apple 35W Dual USB-C Port Power Adapter
- Bundled USB-C power adapter (if applicable)

The following test cases apply to power source identification:

1. Verify the accessory correctly identifies all Apple branded or bundled power sources:
   a. Verify each USB-C power adapter is correctly identified and provides power.

2024-05-13 | Copyright © 2024 Apple Inc. All Rights Reserved.

2. Verify the accessory correctly identifies a Mac and iPad:
   a. Verify the Mac is correctly identified and provides power.
   b. Verify the iPad is correctly identified and provides power.

2024-05-13 | Copyright © 2024 Apple Inc. All Rights Reserved.

56. USB-C Receptacle

Accessories incorporating a USB-C receptacle shall comply with the *USB Type-C Cable and Connector Specification, Release 2.3*.

Accessories may incorporate a USB-C receptacle to:

- Provide power to device.
- Draw power from Apple branded power sources.
- Draw power from USB Type-C Current sources.
- Draw power from USB Power Delivery sources.
- Draw power from USB Dedicated Charging Ports and USB hosts.

Accessories benefiting from incorporating a USB-C receptacle include AC Power Adapters (page 78), Battery Packs (page 81), and speakers.

56.1 Overview

The USB-C receptacle shall be USB-IF certified and have a *Connector* Test ID from the USB-IF, see https://www.usb.org/products.

56.2 Mechanical

Accessories incorporating a USB-C receptacle shall comply with USB-C receptacle interface dimensions as specified in *USB Type-C Cable and Connector Specification, Release 2.3*.

See the recommended minimum USB-C receptacle accessory keep-out (page 269).

56.3 Electrical

56.3.1 Drawing Power

Accessories drawing power from the USB-C receptacle shall:

- Correctly identify all Apple branded power sources.

2024-05-13 | Copyright © 2024 Apple Inc. All Rights Reserved.

- Correctly identify all USB Type-C Current (page 205) sources.
- Enumerate as a USB device when connected to a USB host and:
  - Not draw more than 100 mA of current until they have been successfully enumerated.
  - Request no more than 500 mA of charging current in their USB device descriptor.
- Correctly identify all USB Dedicated Charging Ports (DCP) as defined in the *USB Battery Charging Specification, Release 1.2*.
- Not draw more power than the USB power source claims it is capable of providing using one of the above methods.

Accessories may also correctly identify all USB Power Delivery (PD) (page 204) sources.

56.3.2 Providing Power

Accessories providing power to a device using a USB-C receptacle shall:

- Provide at least 15 W (3 A at 5.0 V) of power.
- Support USB Type-C Current (page 205).

The accessories should:

- Support USB Power Delivery (PD) (page 204).
- Label the receptacle indicating how much power is supplied in watts.

2024-05-13 | Copyright © 2024 Apple Inc. All Rights Reserved.

56.4 USB-C receptacle accessory keep-out

NOTES: (UNLESS OTHERWISE SPECIFIED)

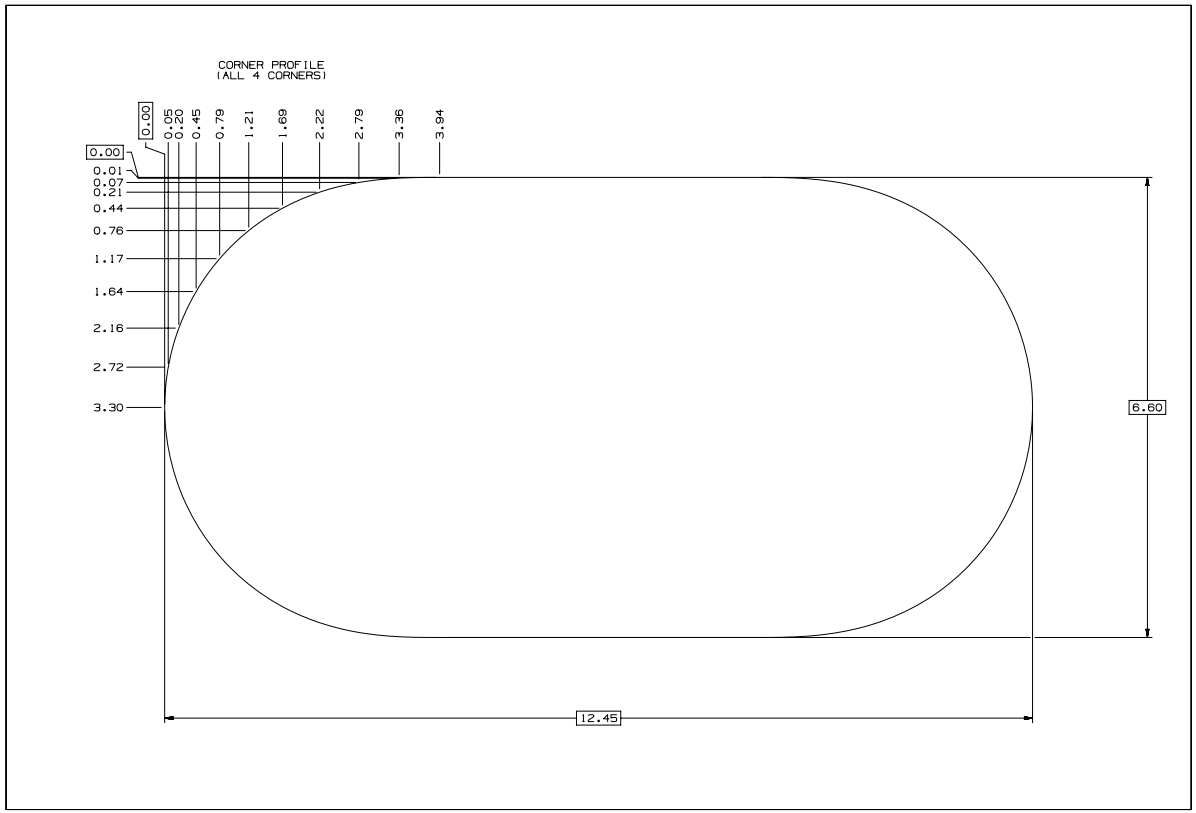

METRIC	Apple Inc.
DRAFTER / DATE	NOTICE OF PROPRIETARY PROPERTY: THE INFORMATION CONTAINED HEREIN IS THE PROPRIETARY PROPERTY OF APPLE INC. THE POSSESSOR AGREES TO THE FOLLOWING: (i) TO MAINTAIN THIS DOCUMENT IN CONFIDENCE (ii) NOT TO REPRODUCE OR COPY IT (iii) NOT TO REVERSE ENGINEER OR PUBLISH IT IN WHOLE OR PART (iv) ALL RIGHTS RESERVED
DESIGNER / DATE	
DIMENSIONS ARE IN MILLIMETERS TOLERANCES	TITLE: PROFILE,USB-C
DO NOT SCALE DRAWINGS	DRAWING NUMBER / REV.
THIRD ANGLE PROJECTION	SIZE D / SCALE 30:1 / SHT 1 OF 1

NX GENERATED

Copyright © 2024 Apple Inc. All Rights Reserved.

56.5 Test Procedures

USB-C receptacle test procedures are outlined in this section.

56.5.1 Connector Test ID

Verify the accessory's USB-C receptacle has an assigned *Connector* Test ID from the USB-IF, see https://www.usb.org/products.

56.5.2 Drawing Power

This procedure applies to accessories drawing power using the USB-C receptacle.

56.5.2.1 Equipment

The following equipment is necessary:

- Apple USB-C Charge Cable (1 m)
- Apple USB-C Charge Cable (2 m)
- Bundled USB-C to USB-C cable (if applicable)
- Bundled USB-A to USB-C cable (if applicable)
- 3rd-party USB-A to USB-C cable
- Apple 140W USB-C Power Adapter
- Apple 96W USB-C Power Adapter
- Apple 70W USB-C Power Adapter
- Apple 67W USB-C Power Adapter
- Apple 30W USB-C Power Adapter
- Apple 20W USB-C Power Adapter
- Apple 35W Dual USB-C Port Compact Power Adapter
- Apple 35W Dual USB-C Port Power Adapter
- Apple 12W USB Power Adapter
- Apple 5W USB Power Adapter
- Bundled USB-C power adapter (if applicable)
- Bundled USB-A power adapter (if applicable)

56.5.2.2 Test Cases

The following test cases apply to power source identification:

1. Verify the accessory correctly identifies all Apple branded or bundled power adapters:
    a. Using each USB-A to USB-C cable, verify each USB-A power adapter is correctly identified and provides power.

2024-05-13 | Copyright © 2024 Apple Inc. All Rights Reserved.

   b. Using each USB-C to USB-C cable, verify each USB-C power adapter is correctly identified and provides power.
2. Verify the accessory correctly identifies a Mac and iPad:
   a. Using each USB-A to USB-C cable and USB-C to USB-C cable, verify the Mac is correctly identified and provides power.
   b. Using each USB-A to USB-C cable and USB-C to USB-C cable, verify the iPad is correctly identified and provides power.

56.5.3 Providing Power

This procedure applies to accessories providing power using the USB-C receptacle.

56.5.3.1 Equipment

The following equipment is necessary:

- Apple USB-C to Lightning Cable (1 m)
- Apple USB-C to Lightning Cable (2 m)
- Apple USB-C Charge Cable (1 m)
- Apple USB-C Charge Cable (2 m)
- Bundled USB-C to USB-C cable (if applicable)

56.5.3.2 Test Cases

The following test cases apply to power providing devices:

1. Verify the accessory correctly provides power to devices:
   a. Using each USB-C to Lightning cable, verify the accessory uses USB Type-C Current or USB PD to identify at least 15 W of power providing capability.
   b. Using each USB-C to Lightning cable, verify the accessory provides power to the device.
2. Verify the accessory correctly identifies a Mac and iPad:
   a. Using each USB-C to USB-C cable, verify the accessory is correctly identified and provides power to the Mac.
   b. Using each USB-C to USB-C cable, verify the accessory is correctly identified and provides power to the iPad.

2024-05-13 | Copyright © 2024 Apple Inc. All Rights Reserved.

Tools

57. Accessory Developer Assistant (ADA)

Some test procedures in this specification require use of the Accessory Developer Assistant app, available from the App Store at https://apps.apple.com/us/app/accessory-developer-assistant/id1635862694.

The Accessory Developer Assistant app is a set of utilities designed to help accessory makers test new accessories. Use the Accessory Developer Assistant app to ensure iPhone and iPad performance for features such as:

- Autofocus & Optical Image Stabilization (page 65)
- Image Quality
- Compass (page 66)
- Near-Field Communication (NFC) (page 65)

57.1 Autofocus & Optical Image Stabilization Test Profile

The Autofocus & Optical Image Stabilization (page 65) test procedure requires an additional profile to be installed:

2024-05-13 | Copyright © 2024 Apple Inc. All Rights Reserved.

1. Use the device to access the ADA Camera Test profile at https://download.developer.apple.com/Developer_Tools/Accessory_Developer_Assistant_Camera_Test_Profile/ADACamera.mobileconfig.
2. Install the profile to the device.
3. Open Settings > Profile Downloaded and complete the installation.
4. Reboot the device.

2024-05-13 | Copyright © 2024 Apple Inc. All Rights Reserved.

References

58. Device Dimensional Drawings

This chapter contains the following iPhone dimensional drawings:

- iPhone 15 Pro Max 1 of 3 (page 283)
- iPhone 15 Pro Max 2 of 3 (page 284)
- iPhone 15 Pro Max 3 of 3 (page 285)
- iPhone 15 Pro 1 of 3 (page 286)
- iPhone 15 Pro 2 of 3 (page 287)
- iPhone 15 Pro 3 of 3 (page 288)
- iPhone 15 Plus 1 of 3 (page 289)
- iPhone 15 Plus 2 of 3 (page 290)
- iPhone 15 Plus 3 of 3 (page 291)
- iPhone 15 1 of 3 (page 292)
- iPhone 15 2 of 3 (page 293)
- iPhone 15 3 of 3 (page 294)
- iPhone 14 Pro Max 1 of 3 (page 295)
- iPhone 14 Pro Max 2 of 3 (page 296)
- iPhone 14 Pro Max 3 of 3 (page 297)
- iPhone 14 Pro 1 of 3 (page 298)
- iPhone 14 Pro 2 of 3 (page 299)
- iPhone 14 Pro 3 of 3 (page 300)
- iPhone 14 Plus 1 of 3 (page 301)
- iPhone 14 Plus 2 of 3 (page 302)
- iPhone 14 Plus 3 of 3 (page 303)
- iPhone 14 1 of 3 (page 304)
- iPhone 14 2 of 3 (page 305)
- iPhone 14 3 of 3 (page 306)
- iPhone SE (3rd generation) and iPhone SE (2nd generation) (page 323)
- iPhone 13 Pro Max 1 of 2 (page 307)
- iPhone 13 Pro Max 2 of 2 (page 308)
- iPhone 13 Pro 1 of 2 (page 309)
- iPhone 13 Pro 2 of 2 (page 310)
- iPhone 13 1 of 2 (page 311)
- iPhone 13 2 of 2 (page 312)
- iPhone 13 mini 1 of 2 (page 313)
- iPhone 13 mini 2 of 2 (page 314)

2024-05-13 | Copyright © 2024 Apple Inc. All Rights Reserved.

- iPhone 12 Pro Max 1 of 2 (page 315)
- iPhone 12 Pro Max 2 of 2 (page 316)
- iPhone 12 Pro 1 of 2 (page 317)
- iPhone 12 Pro 2 of 2 (page 318)
- iPhone 12 1 of 2 (page 319)
- iPhone 12 2 of 2 (page 320)
- iPhone 12 mini 1 of 2 (page 321)
- iPhone 12 mini 2 of 2 (page 322)
- iPhone 11 Pro Max (page 324)
- iPhone 11 Pro (page 325)
- iPhone 11 (page 326)
- iPhone XS Max (page 327)
- iPhone XS (page 328)
- iPhone XR (page 329)
- iPhone X (page 330)
- iPhone 8 Plus (page 331)
- iPhone 8 (page 332)
- iPhone 7 Plus (page 333)
- iPhone 7 (page 334)
- iPhone 6s Plus (page 335)
- iPhone 6s (page 336)
- iPhone 6 Plus (page 337)
- iPhone 6 (page 338)
- iPhone 5s and iPhone SE (page 339)
- iPhone 5c (page 340)
- iPhone 5 (page 341)

This chapter contains the following iPad dimensional drawings:

- iPad Pro 13-inch (M4) 1 of 5 (page 342)
- iPad Pro 13-inch (M4) 2 of 5 (page 343)
- iPad Pro 13-inch (M4) 3 of 5 (page 344)
- iPad Pro 13-inch (M4) 4 of 5 (page 345)
- iPad Pro 13-inch (M4) 5 of 5 (page 346)
- iPad Pro 11-inch (M4) 1 of 5 (page 347)
- iPad Pro 11-inch (M4) 2 of 5 (page 348)
- iPad Pro 11-inch (M4) 3 of 5 (page 349)
- iPad Pro 11-inch (M4) 4 of 5 (page 350)
- iPad Pro 11-inch (M4) 5 of 5 (page 351)
- iPad Air 13-inch (M2) 1 of 5 (page 352)
- iPad Air 13-inch (M2) 2 of 5 (page 353)

2024-05-13 | Copyright © 2024 Apple Inc. All Rights Reserved.

- iPad Air 13-inch (M2) 3 of 5 (page 354)
- iPad Air 13-inch (M2) 4 of 5 (page 355)
- iPad Air 13-inch (M2) 5 of 5 (page 356)
- iPad Air 11-inch (M2) 1 of 5 (page 357)
- iPad Air 11-inch (M2) 2 of 5 (page 358)
- iPad Air 11-inch (M2) 3 of 5 (page 359)
- iPad Air 11-inch (M2) 4 of 5 (page 360)
- iPad Air 11-inch (M2) 5 of 5 (page 361)
- iPad Pro 12.9-inch (6th generation) 1 of 5 (page 362)
- iPad Pro 12.9-inch (6th generation) 2 of 5 (page 363)
- iPad Pro 12.9-inch (6th generation) 3 of 5 (page 364)
- iPad Pro 12.9-inch (6th generation) 4 of 5 (page 365)
- iPad Pro 12.9-inch (6th generation) 5 of 5 (page 366)
- iPad Pro 11-inch (4th generation) 1 of 5 (page 367)
- iPad Pro 11-inch (4th generation) 2 of 5 (page 368)
- iPad Pro 11-inch (4th generation) 3 of 5 (page 369)
- iPad Pro 11-inch (4th generation) 4 of 5 (page 370)
- iPad Pro 11-inch (4th generation) 5 of 5 (page 371)
- iPad (10th generation) 1 of 6 (page 372)
- iPad (10th generation) 2 of 6 (page 373)
- iPad (10th generation) 3 of 6 (page 374)
- iPad (10th generation) 4 of 6 (page 375)
- iPad (10th generation) 5 of 6 (page 376)
- iPad (10th generation) 6 of 6 (page 377)
- iPad Air (5th generation) and iPad Air (4th generation) 1 of 5 (page 378)
- iPad Air (5th generation) and iPad Air (4th generation) 2 of 5 (page 379)
- iPad Air (5th generation) and iPad Air (4th generation) 3 of 5 (page 380)
- iPad Air (5th generation) and iPad Air (4th generation) 4 of 5 (page 381)
- iPad Air (5th generation) and iPad Air (4th generation) 5 of 5 (page 382)
- iPad mini (6th generation) 1 of 6 (page 383)
- iPad mini (6th generation) 2 of 6 (page 384)
- iPad mini (6th generation) 3 of 6 (page 385)
- iPad mini (6th generation) 4 of 6 (page 386)
- iPad mini (6th generation) 5 of 6 (page 387)
- iPad mini (6th generation) 6 of 6 (page 388)
- iPad (9th generation), iPad (8th generation) and iPad (7th generation) 1 of 4 (page 389)
- iPad (9th generation), iPad (8th generation) and iPad (7th generation) 2 of 4 (page 390)
- iPad (9th generation), iPad (8th generation) and iPad (7th generation) 3 of 4 (page 391)
- iPad (9th generation), iPad (8th generation) and iPad (7th generation) 4 of 4 (page 392)
- iPad Pro 12.9-inch (5th generation) 1 of 5 (page 393)

2024-05-13 | Copyright © 2024 Apple Inc. All Rights Reserved.

- iPad Pro 12.9-inch (5th generation) 2 of 5 (page 394)
- iPad Pro 12.9-inch (5th generation) 3 of 5 (page 395)
- iPad Pro 12.9-inch (5th generation) 4 of 5 (page 396)
- iPad Pro 12.9-inch (5th generation) 5 of 5 (page 397)
- iPad Pro 11-inch (3rd generation) 1 of 5 (page 398)
- iPad Pro 11-inch (3rd generation) 2 of 5 (page 399)
- iPad Pro 11-inch (3rd generation) 3 of 5 (page 400)
- iPad Pro 11-inch (3rd generation) 4 of 5 (page 401)
- iPad Pro 11-inch (3rd generation) 5 of 5 (page 402)
- iPad Pro 12.9-inch (4th generation) 1 of 5 (page 403)
- iPad Pro 12.9-inch (4th generation) 2 of 5 (page 404)
- iPad Pro 12.9-inch (4th generation) 3 of 5 (page 405)
- iPad Pro 12.9-inch (4th generation) 4 of 5 (page 406)
- iPad Pro 12.9-inch (4th generation) 5 of 5 (page 407)
- iPad Pro 11-inch (2nd generation) 1 of 5 (page 408)
- iPad Pro 11-inch (2nd generation) 2 of 5 (page 409)
- iPad Pro 11-inch (2nd generation) 3 of 5 (page 410)
- iPad Pro 11-inch (2nd generation) 4 of 5 (page 411)
- iPad Pro 11-inch (2nd generation) 5 of 5 (page 412)
- iPad Air (3rd generation) with Wi-Fi 1 of 3 (page 413)
- iPad Air (3rd generation) with Wi-Fi 2 of 3 (page 414)
- iPad Air (3rd generation) with Wi-Fi 3 of 3 (page 415)
- iPad Air (3rd generation) with Wi-Fi + Cellular 1 of 3 (page 416)
- iPad Air (3rd generation) with Wi-Fi + Cellular 2 of 3 (page 417)
- iPad Air (3rd generation) with Wi-Fi + Cellular 3 of 3 (page 418)
- iPad mini (5th generation) with Wi-Fi 1 of 3 (page 419)
- iPad mini (5th generation) with Wi-Fi 2 of 3 (page 420)
- iPad mini (5th generation) with Wi-Fi 3 of 3 (page 421)
- iPad mini (5th generation) with Wi-Fi + Cellular 1 of 3 (page 422)
- iPad mini (5th generation) with Wi-Fi + Cellular 2 of 3 (page 423)
- iPad mini (5th generation) with Wi-Fi + Cellular 3 of 3 (page 424)
- iPad Pro 12.9-inch (3rd generation) 1 of 3 (page 425)
- iPad Pro 12.9-inch (3rd generation) 2 of 3 (page 426)
- iPad Pro 12.9-inch (3rd generation) 3 of 3 (page 427)
- iPad Pro 11-inch (1st generation) 1 of 3 (page 428)
- iPad Pro 11-inch (1st generation) 2 of 3 (page 429)
- iPad Pro 11-inch (1st generation) 3 of 3 (page 430)
- iPad Pro 12.9-inch (2nd generation) with Wi-Fi (page 431)
- iPad Pro 12.9-inch (2nd generation) with Wi-Fi + Cellular (page 432)
- iPad Pro 12.9-inch (2nd generation) Magnet/Hall Effect Sensors 1 of 2 (page 433)

2024-05-13 | Copyright © 2024 Apple Inc. All Rights Reserved.

- iPad Pro 12.9-inch (2nd generation) Magnet/Hall Effect Sensors 2 of 2 (page 434)
- iPad Pro 10.5-inch with Wi-Fi (page 435)
- iPad Pro 10.5-inch with Wi-Fi + Cellular (page 436)
- iPad Pro 10.5-inch Magnet/Hall Effect Sensors 1 of 2 (page 437)
- iPad Pro 10.5-inch Magnet/Hall Effect Sensors 2 of 2 (page 438)
- iPad (5th and 6th generation) with Wi-Fi + Cellular (page 439)
- iPad (5th and 6th generation) Magnet/Hall Effect Sensors 1 of 2 (page 440)
- iPad (5th and 6th generation) Magnet/Hall Effect Sensors 2 of 2 (page 441)
- iPad Pro 9.7-inch with Wi-Fi (page 442)
- iPad Pro 9.7-inch with Wi-Fi + Cellular (page 443)
- iPad Pro 9.7-inch Magnet/Hall Effect Sensors 1 of 2 (page 444)
- iPad Pro 9.7-inch Magnet/Hall Effect Sensors 2 of 2 (page 445)
- iPad Pro 12.9-inch (1st generation) with Wi-Fi (page 446)
- iPad Pro 12.9-inch (1st generation) with Wi-Fi + Cellular (page 447)
- iPad Pro 12.9-inch (1st generation) Magnet/Hall Effect Sensors 1 of 2 (page 448)
- iPad Pro 12.9-inch (1st generation) Magnet/Hall Effect Sensors 2 of 2 (page 449)
- iPad mini 4 with Wi-Fi (page 450)
- iPad mini 4 with Wi-Fi + Cellular (page 451)
- iPad mini 4 Magnet/Hall Effect Sensors (page 452)
- iPad Air 2 with Wi-Fi (page 453)
- iPad Air 2 with Wi-Fi + Cellular (page 454)
- iPad mini 2 and iPad mini 3 with Wi-Fi (page 455)
- iPad mini 2 and iPad mini 3 with Wi-Fi + Cellular (page 456)
- iPad Air with Wi-Fi (page 457)
- iPad Air with Wi-Fi + Cellular (page 458)
- iPad mini with Wi-Fi (page 459)
- iPad mini with Wi-Fi + Cellular (page 460)
- iPad (4th generation) with Wi-Fi (page 461)
- iPad (4th generation) with Wi-Fi + Cellular (page 462)

This chapter contains the following Apple Watch dimensional drawings:

- Apple Watch Ultra 2, 1 of 3 (page 463)
- Apple Watch Ultra 2, 2 of 3 (page 464)
- Apple Watch Ultra 2, 3 of 3 (page 465)
- Apple Watch Series 9, 45 mm (page 466)
- Apple Watch Series 9, 41 mm (page 467)
- Apple Watch Ultra, 1 of 3 (page 468)
- Apple Watch Ultra, 2 of 3 (page 469)
- Apple Watch Ultra, 3 of 3 (page 470)
- Apple Watch Series 8, 45 mm (page 471)

2024-05-13 | Copyright © 2024 Apple Inc. All Rights Reserved.

- Apple Watch Series 8, 41 mm (page 472)
- Apple Watch SE, 44 mm (page 473)
- Apple Watch SE, 40 mm (page 474)
- Apple Watch Series 7, 45 mm (page 475)
- Apple Watch Series 7, 41 mm (page 476)
- Apple Watch Series 6, 44 mm (page 477)
- Apple Watch Series 6, 40 mm (page 478)
- Apple Watch SE (1st generation), 44 mm (page 479)
- Apple Watch SE (1st generation), 40 mm (page 480)
- Apple Watch Series 5, 44 mm (page 481)
- Apple Watch Series 5, 40 mm (page 482)
- Apple Watch Series 5 Ceramic, 44 mm (page 483)
- Apple Watch Series 5 Ceramic, 40 mm (page 484)
- Apple Watch Series 4, 44 mm (page 485)
- Apple Watch Series 4, 40 mm (page 486)
- Apple Watch Series 3 Ceramic, 42 mm (page 487)
- Apple Watch Series 3 Ceramic, 38 mm (page 488)
- Apple Watch Series 3 Metal, 42 mm (page 489)
- Apple Watch Series 3 Metal, 38 mm (page 490)
- Apple Watch Series 2 Ceramic, 42 mm (page 491)
- Apple Watch Series 2 Ceramic, 38 mm (page 492)
- Apple Watch Series 2 Metal, 42 mm (page 493)
- Apple Watch Series 2 Metal, 38 mm (page 494)
- Apple Watch (1st generation) and Apple Watch Series 1, 42 mm (page 495)
- Apple Watch (1st generation) and Apple Watch Series 1, 38 mm (page 496)

This chapter contains the following Apple Vision Pro dimensional drawings:

- Apple Vision Pro 1 of 6 (page 497)
- Apple Vision Pro 2 of 6 (page 498)
- Apple Vision Pro 3 of 6 (page 499)
- Apple Vision Pro 4 of 6 (page 500)
- Apple Vision Pro 5 of 6 (page 501)
- Apple Vision Pro 6 of 6 (page 502)
- Apple Vision Pro Battery (page 503)
- Apple Vision Pro Audio Strap (page 504)
- ZEISS Optical Inserts 1 of 4 (page 505)
- ZEISS Optical Inserts 2 of 4 (page 506)
- ZEISS Optical Inserts 3 of 4 (page 507)
- ZEISS Optical Inserts 4 of 4 (page 508)

This chapter contains the following AirPods dimensional drawings:

2024-05-13 | Copyright © 2024 Apple Inc. All Rights Reserved.

- MagSafe Charging Case (USB-C) for AirPods Pro (2nd generation) 1 of 3 (page 509)
- MagSafe Charging Case (USB-C) for AirPods Pro (2nd generation) 2 of 3 (page 510)
- MagSafe Charging Case (USB-C) for AirPods Pro (2nd generation) 3 of 3 (page 511)
- MagSafe Charging Case for AirPods Pro (2nd generation) 1 of 3 (page 512)
- MagSafe Charging Case for AirPods Pro (2nd generation) 2 of 3 (page 513)
- MagSafe Charging Case for AirPods Pro (2nd generation) 3 of 3 (page 514)
- AirPods Pro (2nd generation) (page 515)
- MagSafe Charging Case for AirPods (3rd generation) (page 516)
- AirPods (3rd generation) (page 517)
- Wireless Charging Case for AirPods Pro (1st generation) (page 518)
- AirPods Pro (1st generation) (page 519)
- Wireless Charging Case for AirPods (page 520)
- AirPods (1st generation) and AirPods (2nd generation) (page 521)

This chapter contains the following dimensional drawings:

- AirTag (page 522)
- Apple TV 4K (3rd generation) (page 523)
- Siri Remote (3rd generation) (page 524)

2024-05-13 | Copyright © 2024 Apple Inc. All Rights Reserved.

58.1 iPhone 15 Pro Max 1 of 3

NOTES: (UNLESS OTHERWISE SPECIFIED)

1. NO METAL CONTACT WITH PRODUCT.
2. DO NOT OBSTRUCT PORTS.
3. DO NOT OBSTRUCT THE IMAGING FEATURES: FRONT CAMERA, REAR CAMERAS, REAR FLASH.
4. DO NOT OBSTRUCT FORWARD FACING SENSORS.
5. RELATIVE MAGNETIC PERMEABILITY OF ANY METAL USED ON CASE: 1.05 MAX, PER ASTM A342/A342M-14.
6. DO NOT TOUCH GLASS.
7. NO MAGNETS ON REAR OF PRODUCT EXCEPT MAGSAFE MAGNETS.
8. CASE THICKNESS ON BACKSIDE OF PRODUCT: 2.1 mm MAX TO ENSURE FULL FUNCTIONALITY.

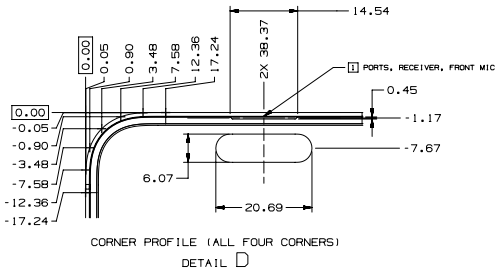

CORNER PROFILE (ALL FOUR CORNERS)
DETAIL D

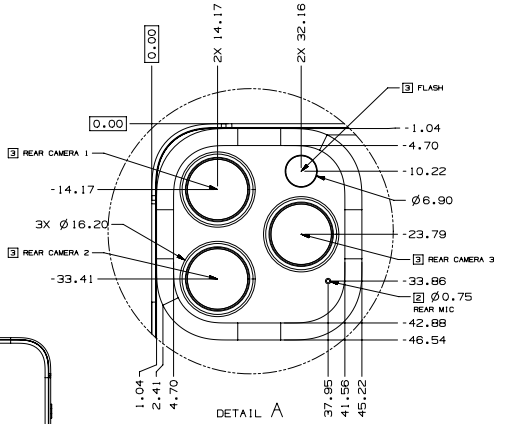

DETAIL A

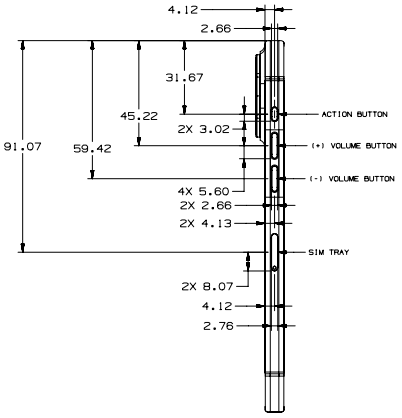

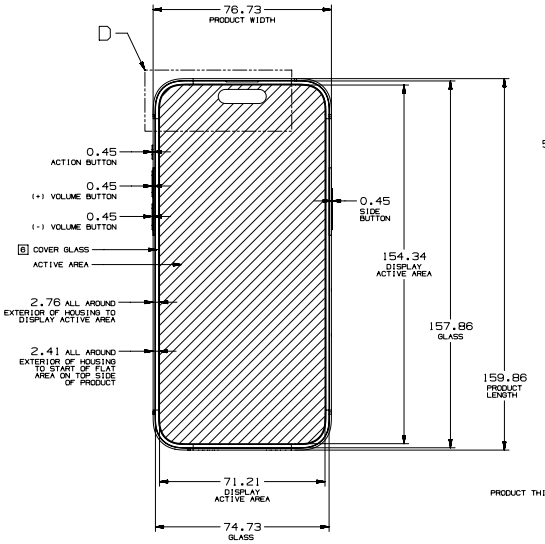

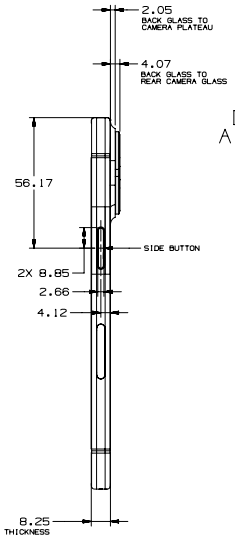

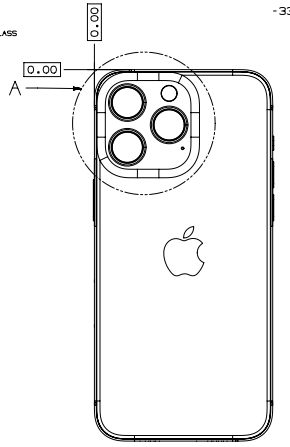

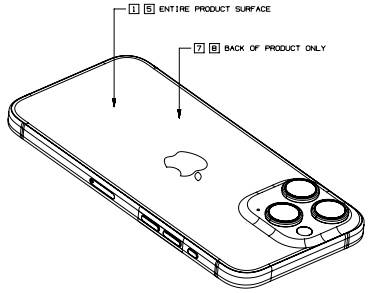

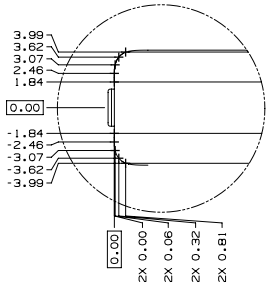

PROFILE (ALL SIDES)
DETAIL B

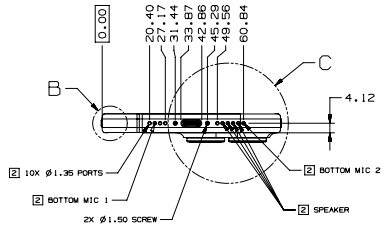

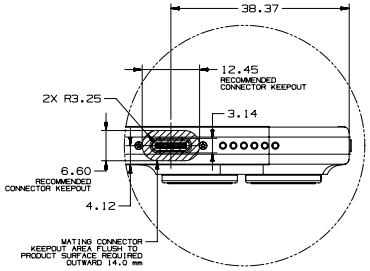

DETAIL C

METRIC	
DRAFTER / DATE	NOTICE OF PROPRIETARY PROPERTY: THE INFORMATION CONTAINED HEREIN IS THE PROPRIETARY PROPERTY OF APPLE INC. THE POSSESSOR AGREES TO THE FOLLOWING: (i) TO MAINTAIN THIS DOCUMENT IN CONFIDENCE (ii) NOT TO COPY OR REPRODUCE IT (iii) NOT TO REVEAL OR PUBLISH IT IN WHOLE OR PART (iv) ALL RIGHTS RESERVED
DESIGNER / DATE	
DIMENSIONS ARE IN MILLIMETERS TOLERANCES X.X ±0.2 X.XX ±0.10 X.XXX ±0.050 ANGLES ±0.5° DO NOT SCALE DRAWINGS	TITLE: IPHONE 15 PRO MAX
THIRD ANGLE PROJECTION	DRAWING NUMBER / REV. / SIZE D / SCALE NONE / SHT 1 OF 3

NX GENERATED

Copyright © 2024 Apple Inc. All Rights Reserved.

58.2 iPhone 15 Pro Max 2 of 3

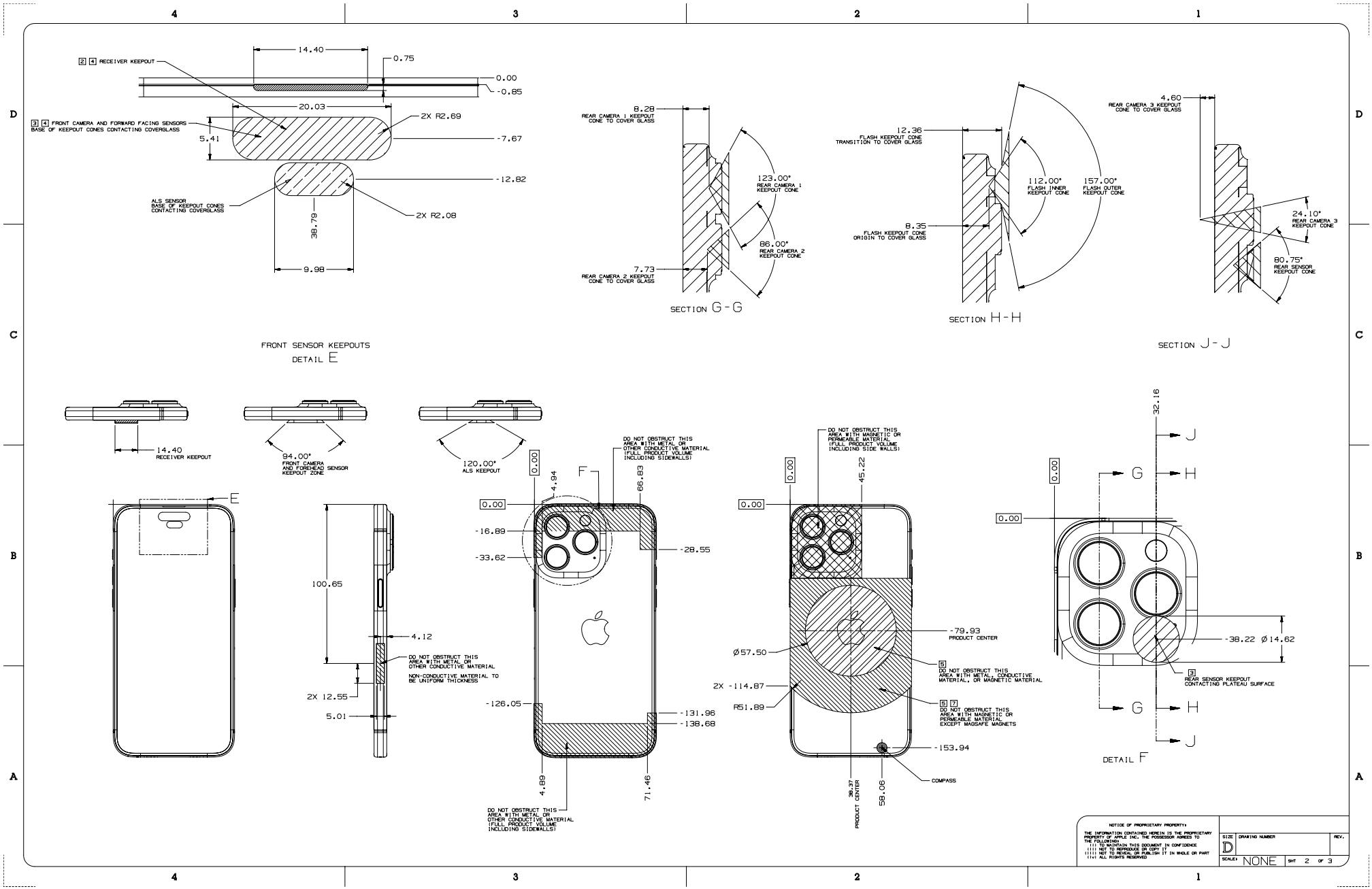

Copyright © 2024 Apple Inc. All Rights Reserved.

58.3 iPhone 15 Pro Max 3 of 3

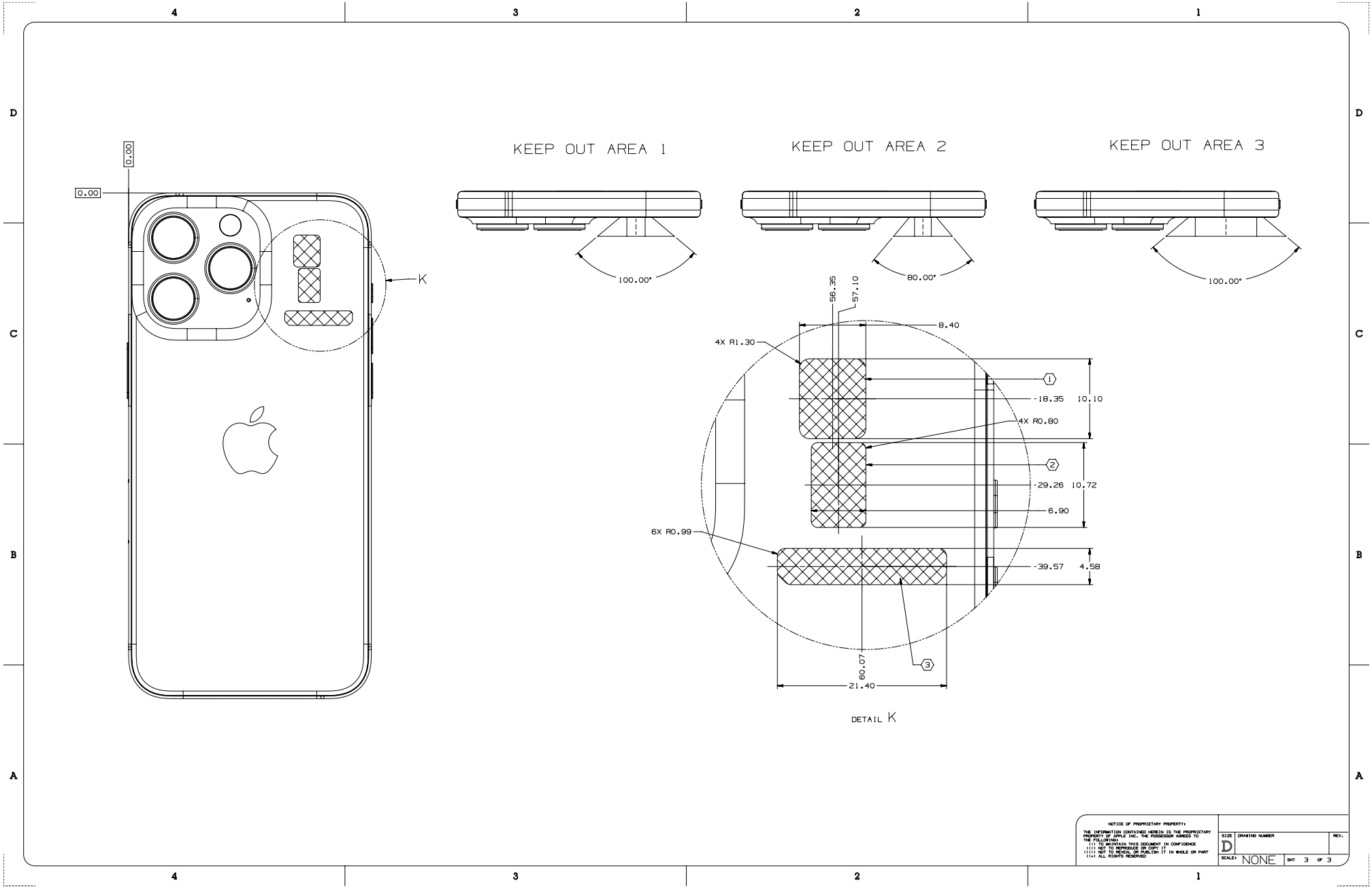

Copyright © 2024 Apple Inc. All Rights Reserved.

58.4 iPhone 15 Pro 1 of 3

NOTES: (UNLESS OTHERWISE SPECIFIED)

1. NO METAL CONTACT WITH PRODUCT.
2. DO NOT OBSTRUCT PORTS.
3. DO NOT OBSTRUCT THE IMAGING FEATURES: FRONT CAMERA, REAR CAMERAS, REAR FLASH.
4. DO NOT OBSTRUCT FORWARD FACING SENSORS.
5. RELATIVE MAGNETIC PERMEABILITY OF ANY METAL USED ON CASE: 1.05 MAX, PER ASTM A342/A342M-14.
6. DO NOT TOUCH GLASS.
7. NO MAGNETS ON REAR OF PRODUCT EXCEPT MAGSAFE MAGNETS.
8. CASE THICKNESS ON BACKSIDE OF PRODUCT: 2.1 mm MAX TO ENSURE FULL FUNCTIONALITY.

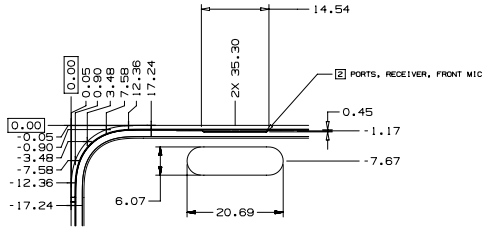

CORNER PROFILE (ALL FOUR CORNERS)
DETAIL A

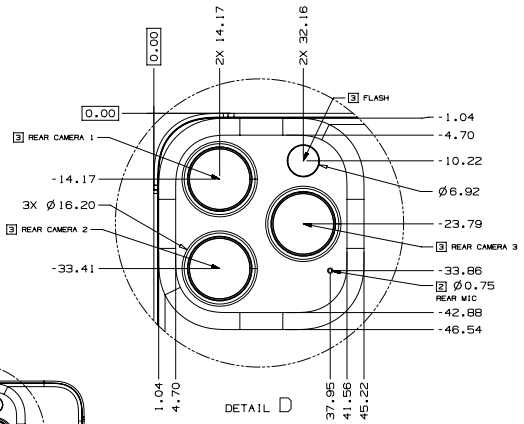

DETAIL D

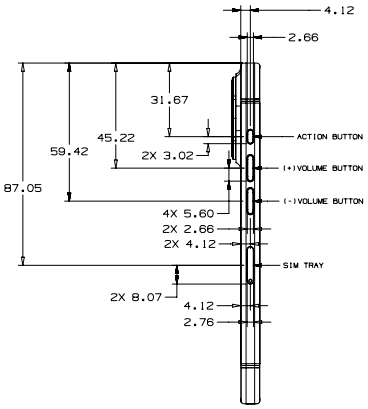

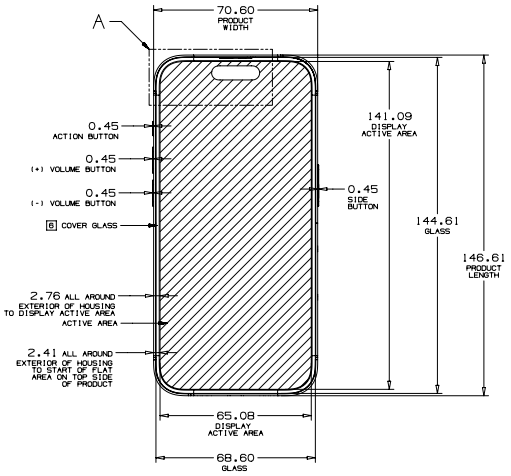

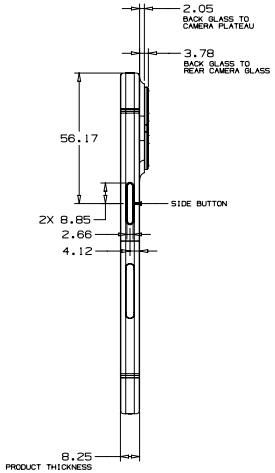

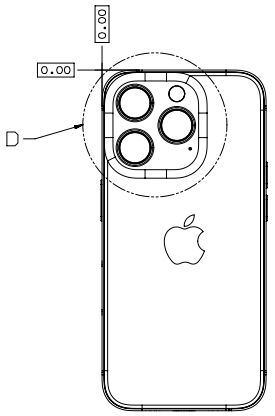

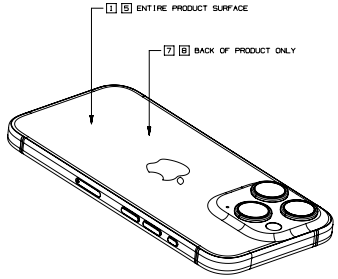

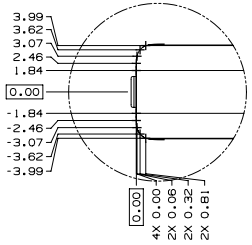

PROFILE (ALL SIDES)
DETAIL B

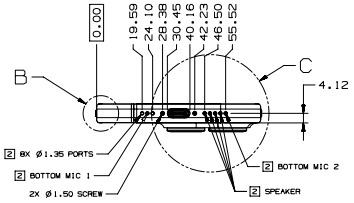

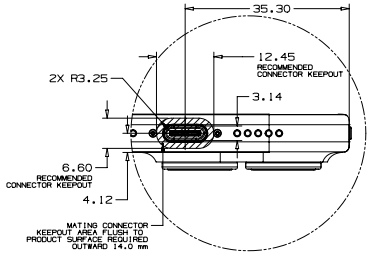

DETAIL C

METRIC		
DRAFTER	DATE	NOTICE OF PROPRIETARY PROPERTY: THE INFORMATION CONTAINED HEREIN IS THE PROPRIETARY PROPERTY OF APPLE INC. THE POSSESSOR AGREES TO THE FOLLOWING: (i) TO MAINTAIN THIS DOCUMENT IN CONFIDENCE (ii) NOT TO REPRODUCE OR COPY IT (iii) NOT TO REVEAL OR PUBLISH IT IN WHOLE OR PART (iv) ALL RIGHTS RESERVED
DESIGNER	DATE	
DIMENSIONS ARE IN MILLIMETERS TOLERANCES X.X ±0.2 X.XX ±0.10 X.XXX ±0.050 ANGLES ±0.5° DO NOT SCALE DRAWINGS		TITLE: IPHONE 15 PRO
		DRAWING NUMBER / REV.
THIRD ANGLE PROJECTION	SIZE D	SCALE NONE — SHT 1 OF 3

NX GENERATED

Copyright © 2024 Apple Inc. All Rights Reserved.

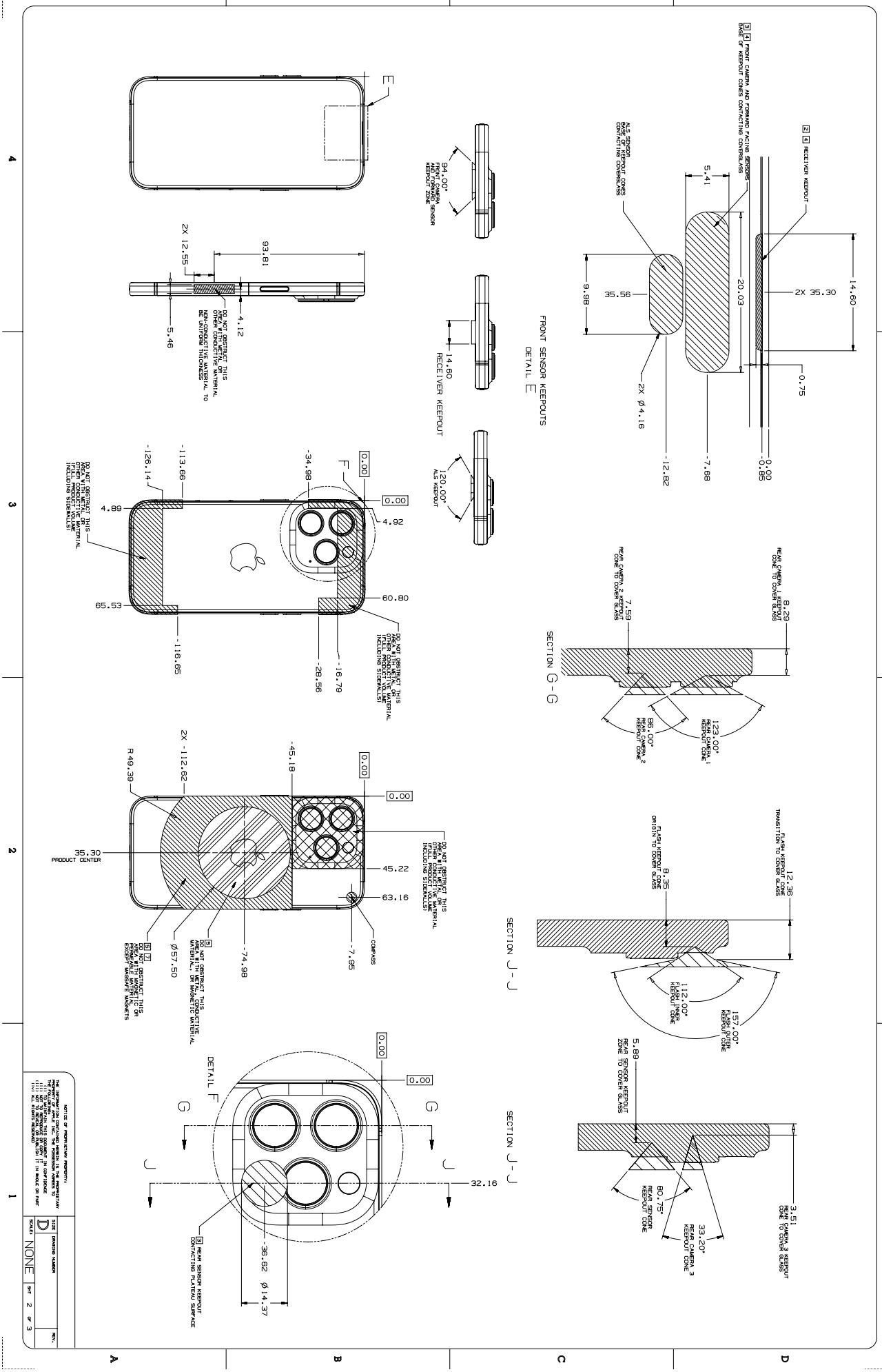

2024-05-13 | Copyright © 2024 Apple Inc. All Rights Reserved.

58.6 iPhone 15 Pro 3 of 3

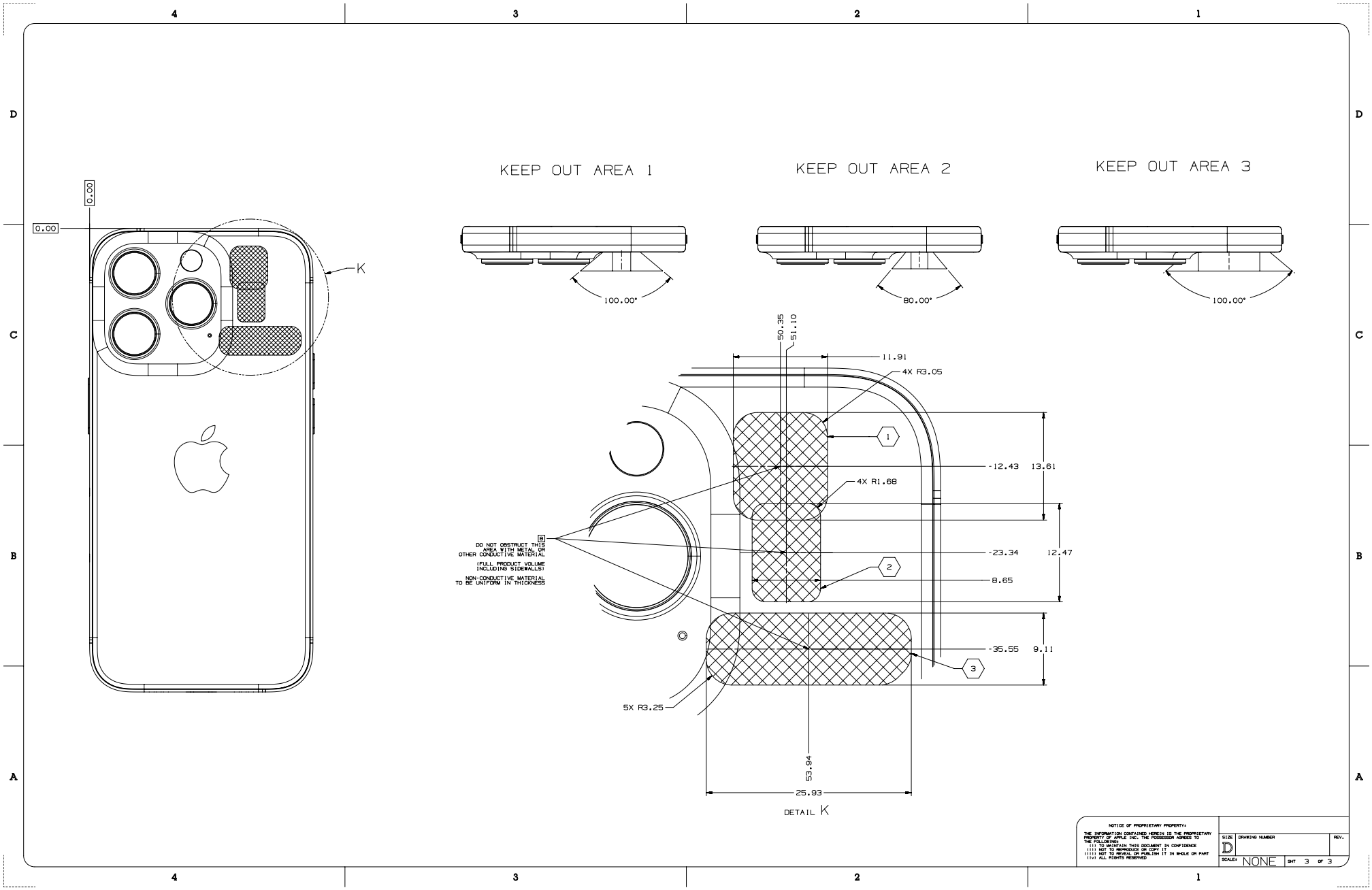

Copyright © 2024 Apple Inc. All Rights Reserved.

58.7 iPhone 15 Plus 1 of 3

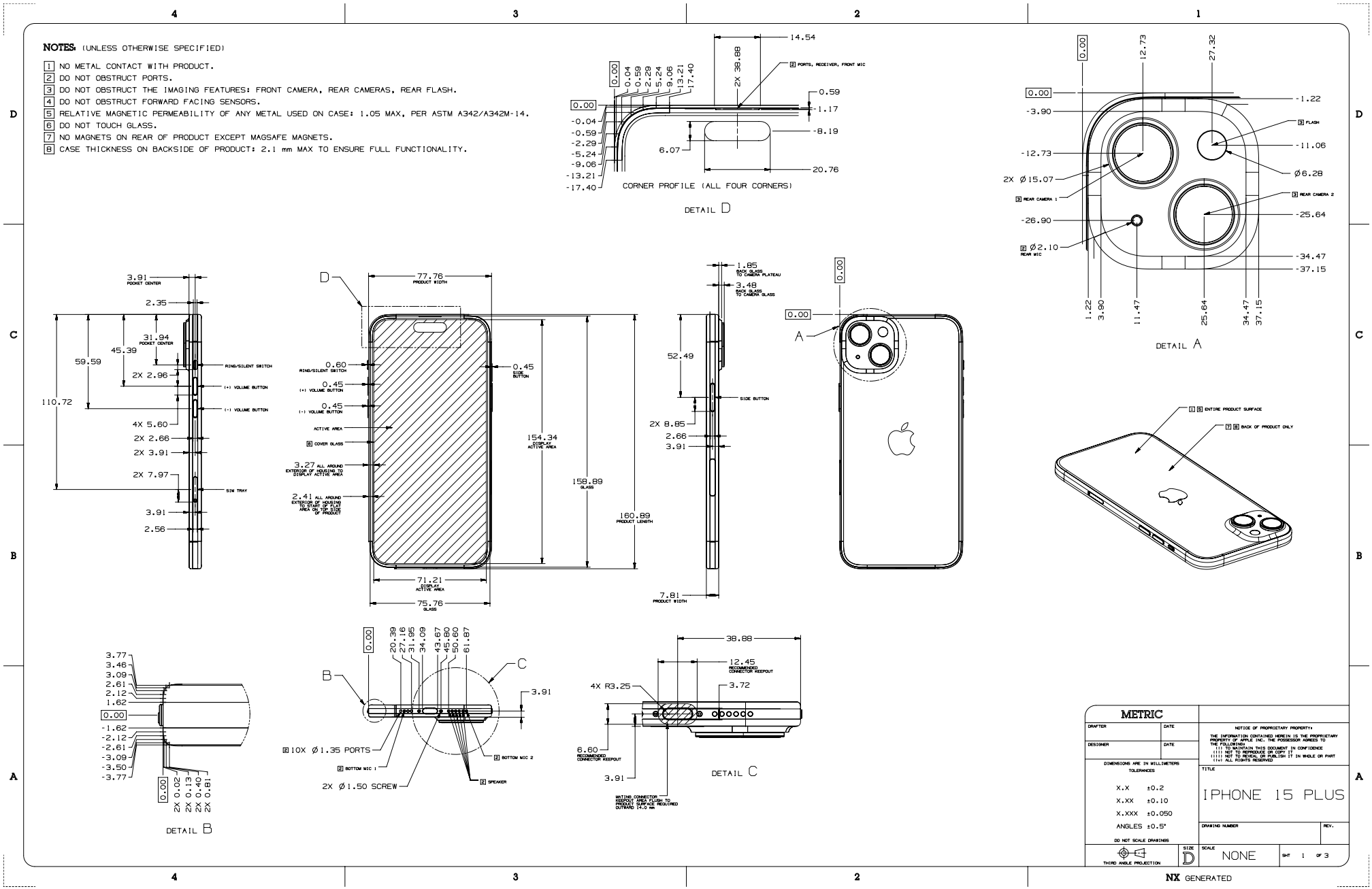

58.8 iPhone 15 Plus 2 of 3

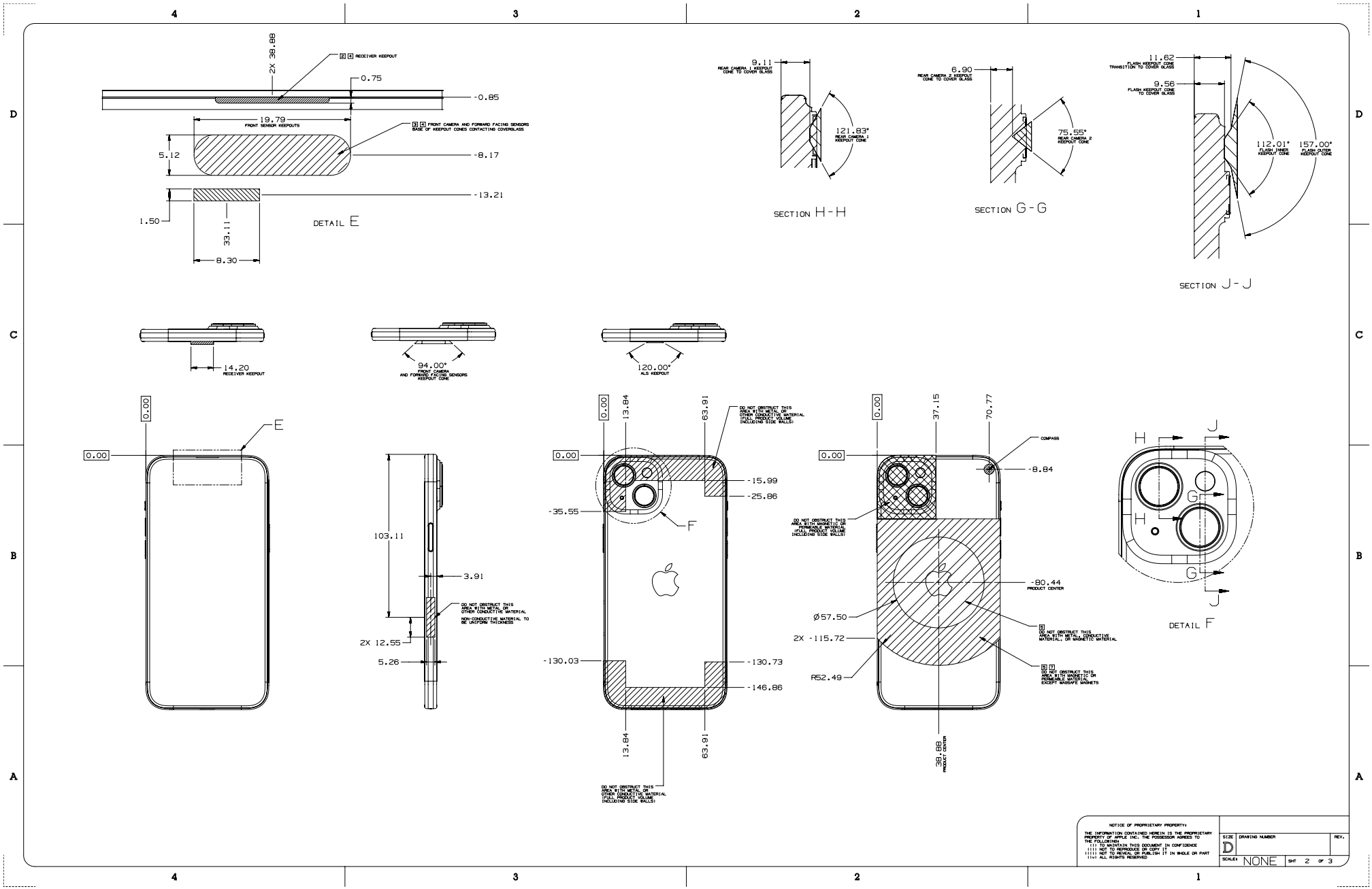

Copyright © 2024 Apple Inc. All Rights Reserved.

58.9 iPhone 15 Plus 3 of 3

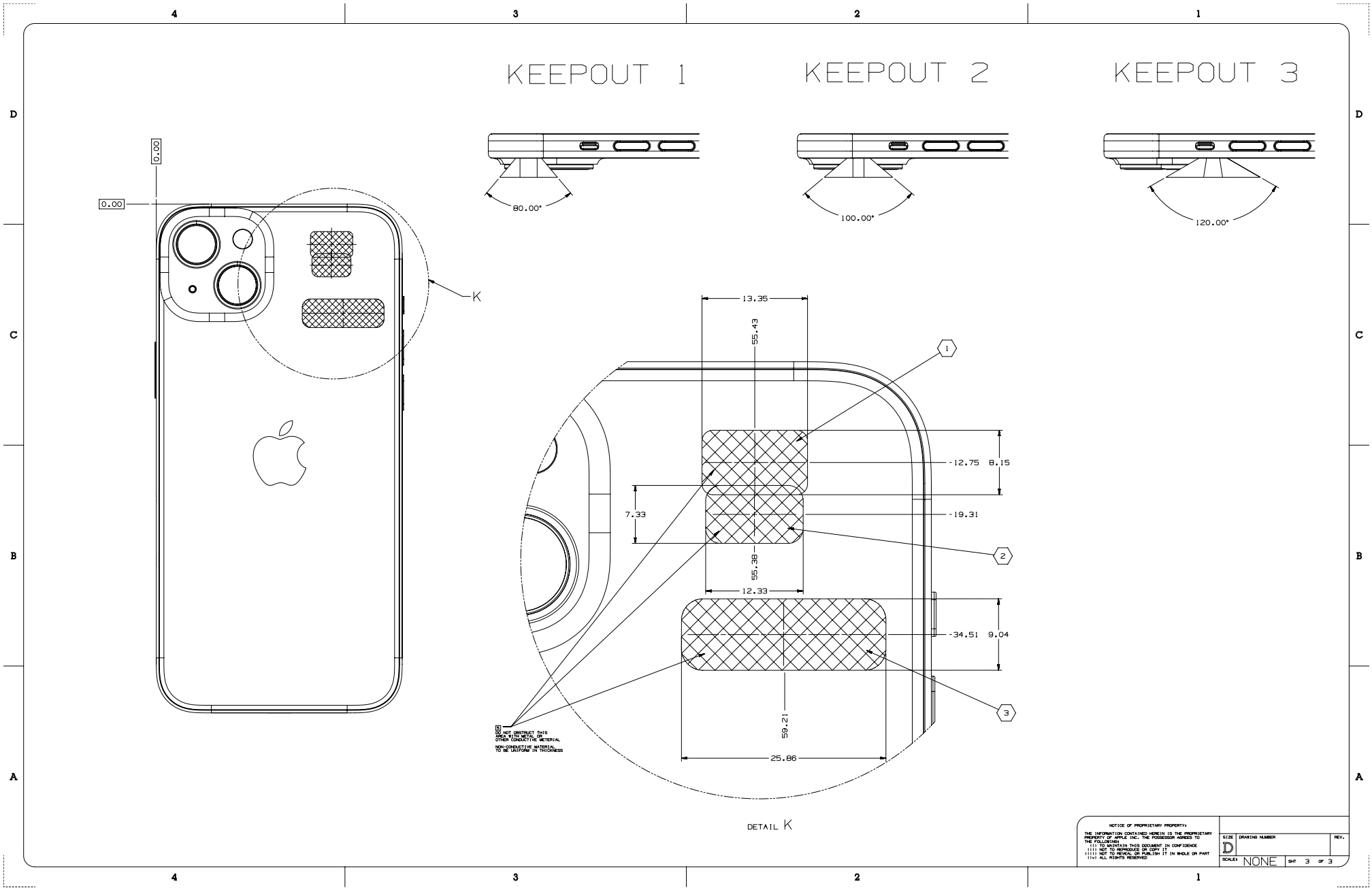

58.10 iPhone 15 1 of 3

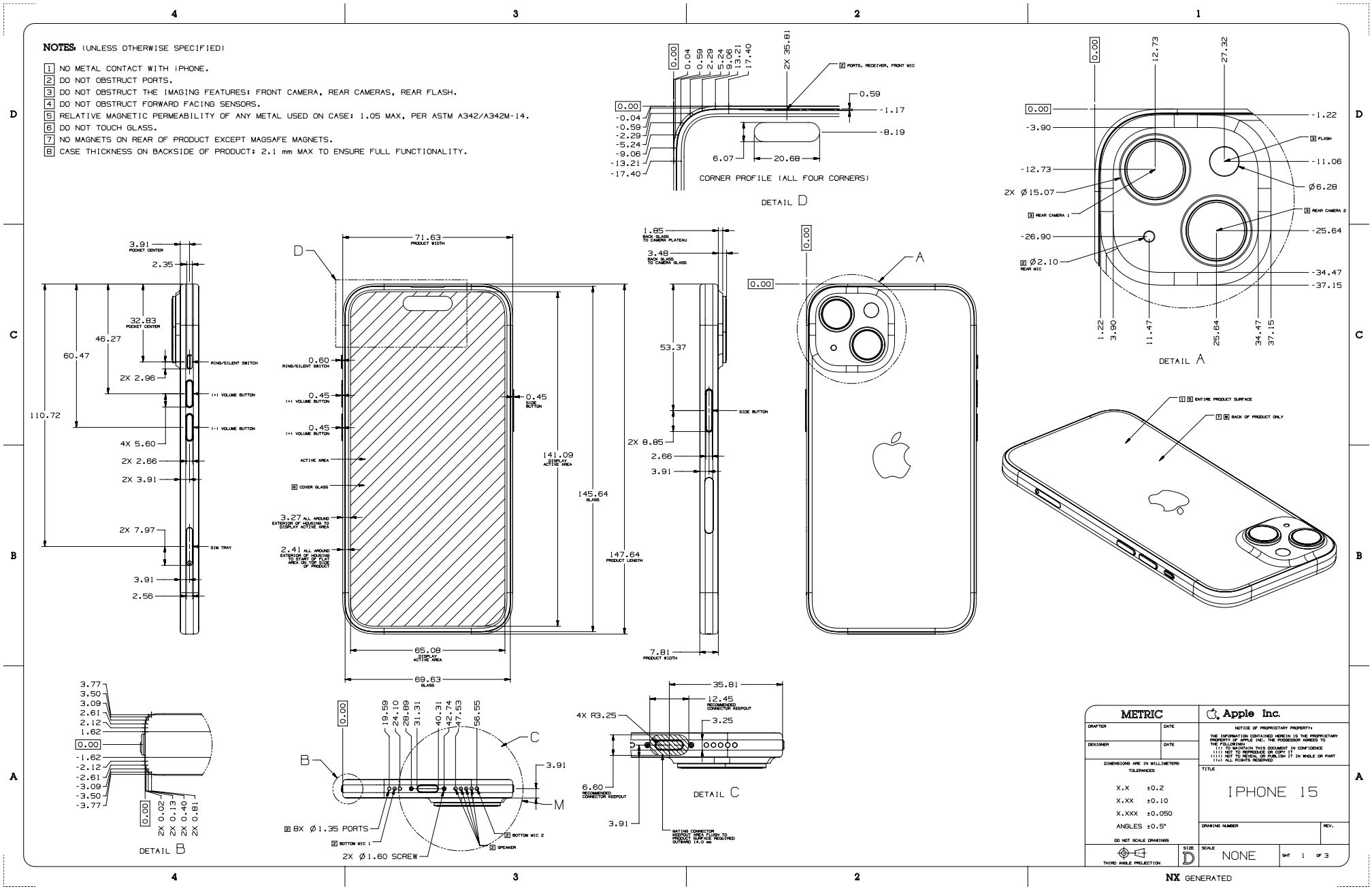

58.11 iPhone 15 2 of 3

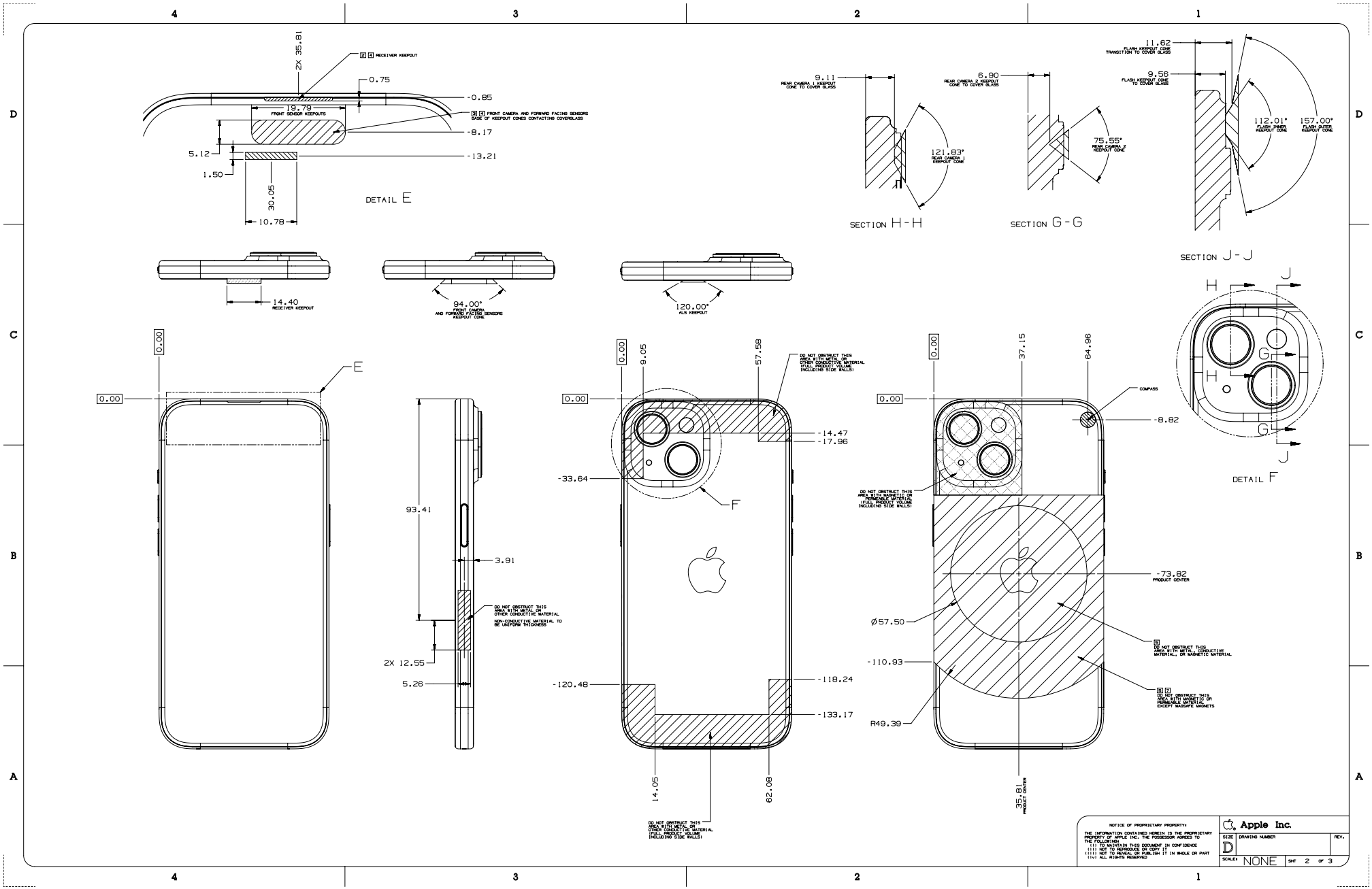

Copyright © 2024 Apple Inc. All Rights Reserved.

58.12 iPhone 15 3 of 3

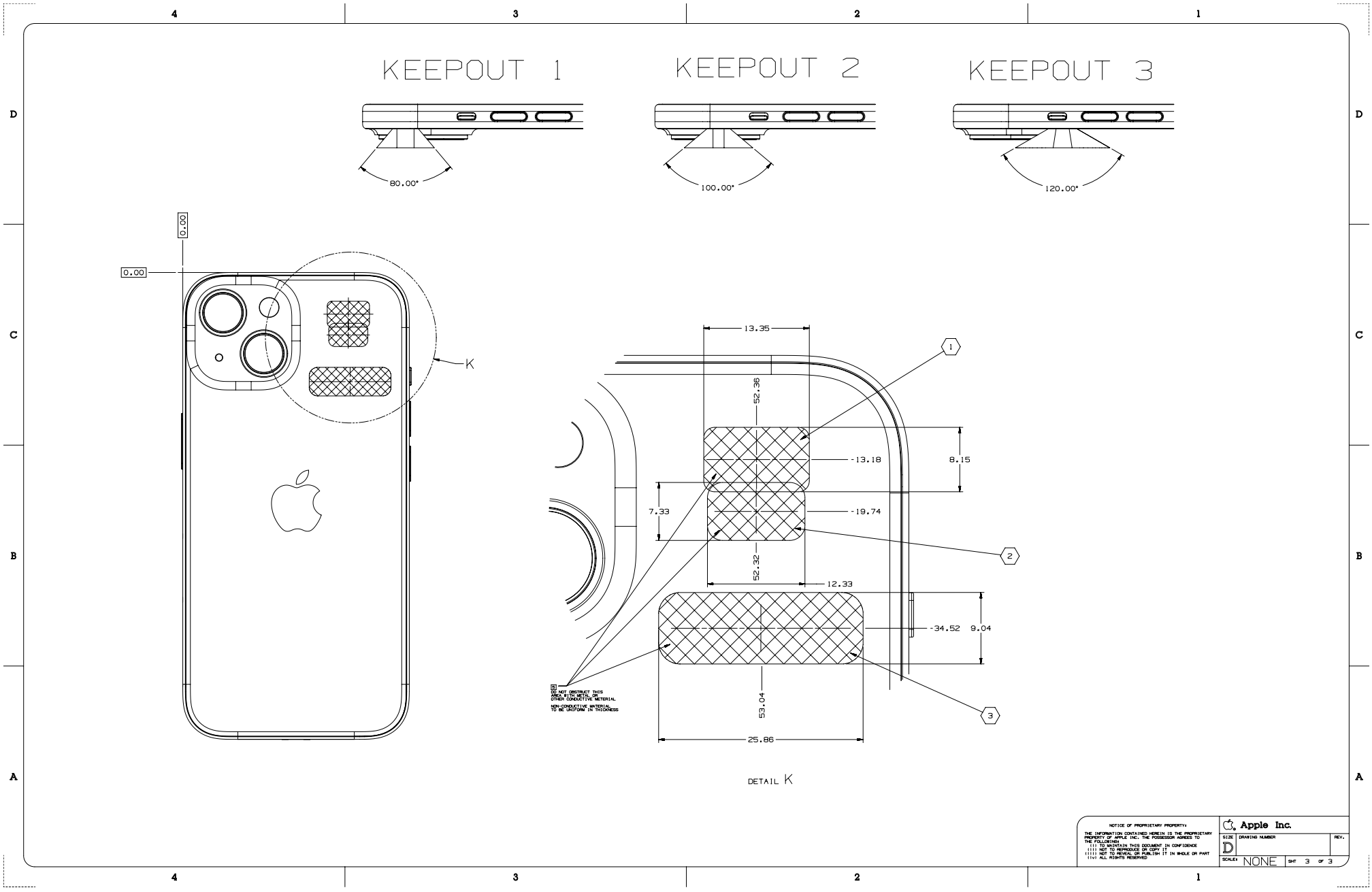

Copyright © 2024 Apple Inc. All Rights Reserved.

58.13 iPhone 14 Pro Max 1 of 3

NOTES: (UNLESS OTHERWISE SPECIFIED)

1. NO METAL CONTACT WITH iPHONE.
2. DO NOT OBSTRUCT PORTS.
3. DO NOT OBSTRUCT THE IMAGING FEATURES: FRONT CAMERA, REAR CAMERAS, REAR FLASH.
4. DO NOT OBSTRUCT FORWARD FACING SENSORS.
5. RELATIVE MAGNETIC PERMEABILITY OF ANY METAL USED ON CASE: 1.05 MAX, PER ASTM A342/A342M-14.
6. DO NOT TOUCH GLASS.
7. NO MAGNETS ON REAR OF PRODUCT EXCEPT MAGSAFE MAGNETS.
8. CASE THICKNESS ON BACKSIDE OF PRODUCT: 2.1 mm MAX TO ENSURE FULL FUNCTIONALITY.

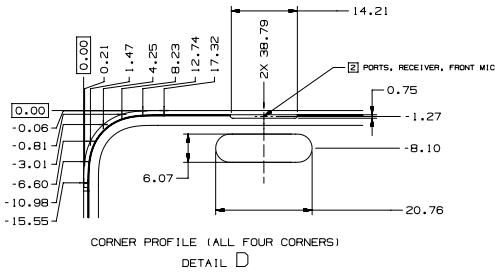

CORNER PROFILE (ALL FOUR CORNERS)
DETAIL D

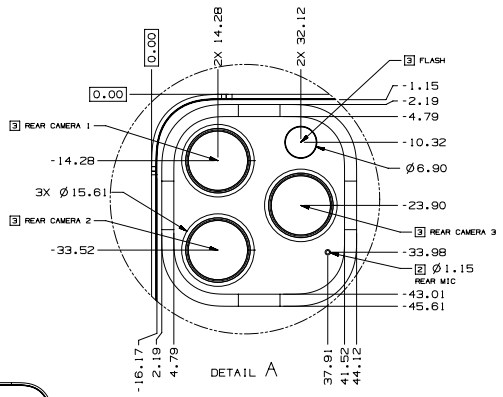

DETAIL A

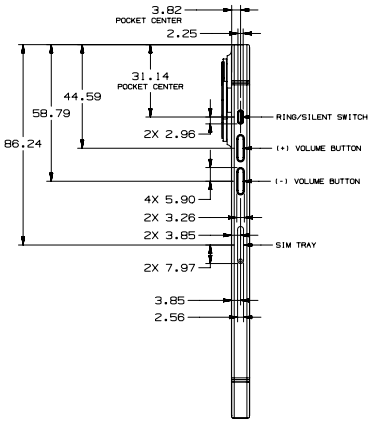

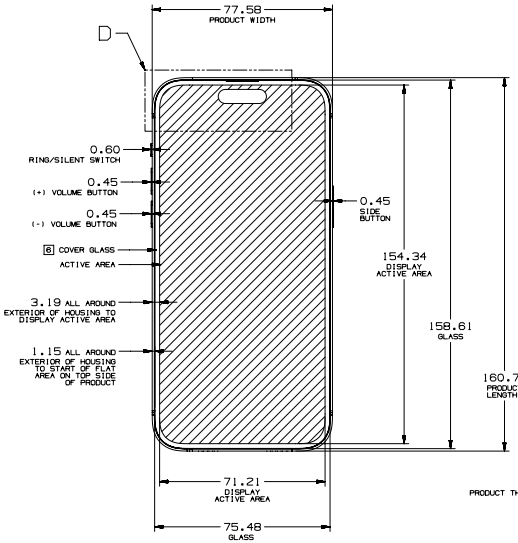

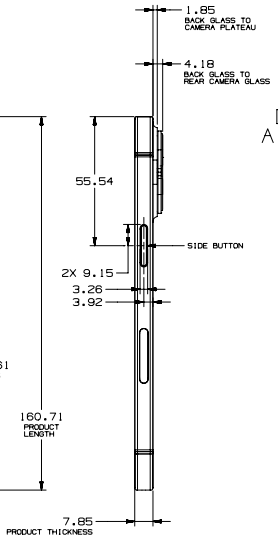

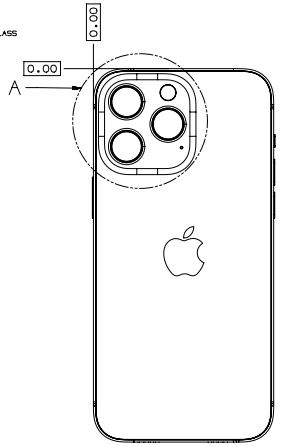

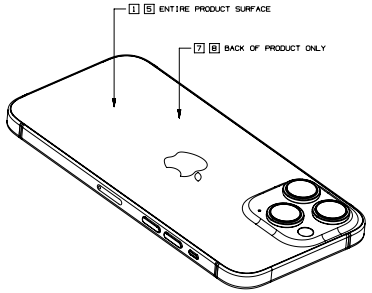

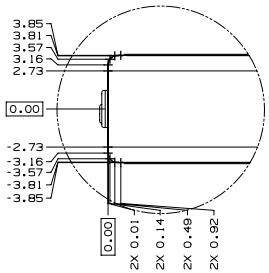

PROFILE (ALL SIDES)
DETAIL B

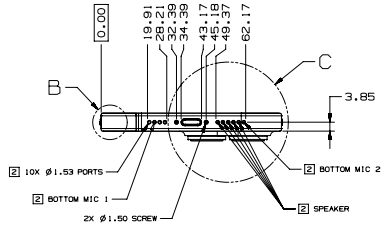

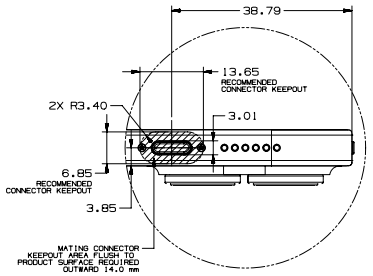

DETAIL C

METRIC		Apple Inc.	
DRAFTER	DATE	NOTICE OF PROPRIETARY PROPERTY: THE INFORMATION CONTAINED HEREIN IS THE PROPRIETARY PROPERTY OF APPLE INC. THE POSSESSOR AGREES TO THE FOLLOWING: (i) TO MAINTAIN THIS DOCUMENT IN CONFIDENCE (ii) NOT TO REPRODUCE OR COPY IT (iii) NOT TO REVERSE ENGINEER OR PUBLISH IT IN WHOLE OR PART (iv) ALL RIGHTS RESERVED	
DESIGNER	DATE		
DIMENSIONS ARE IN MILLIMETERS TOLERANCES 0 < - < 2 ±0.05 2 < - < 10 ±0.08 10 < - < 50 ±0.10 50 < - < 100 ±0.20 100 < - < 200 ±0.30 200 < - ±0.40 ANGLES ±0.50° DO NOT SCALE DRAWING		TITLE: IPHONE 14 PRO MAX	
		DRAWING NUMBER	REV.
THIRD ANGLE PROJECTION	SIZE D	SCALE NONE	SHT 1 OF 3

NX GENERATED

58.14 iPhone 14 Pro Max 2 of 3

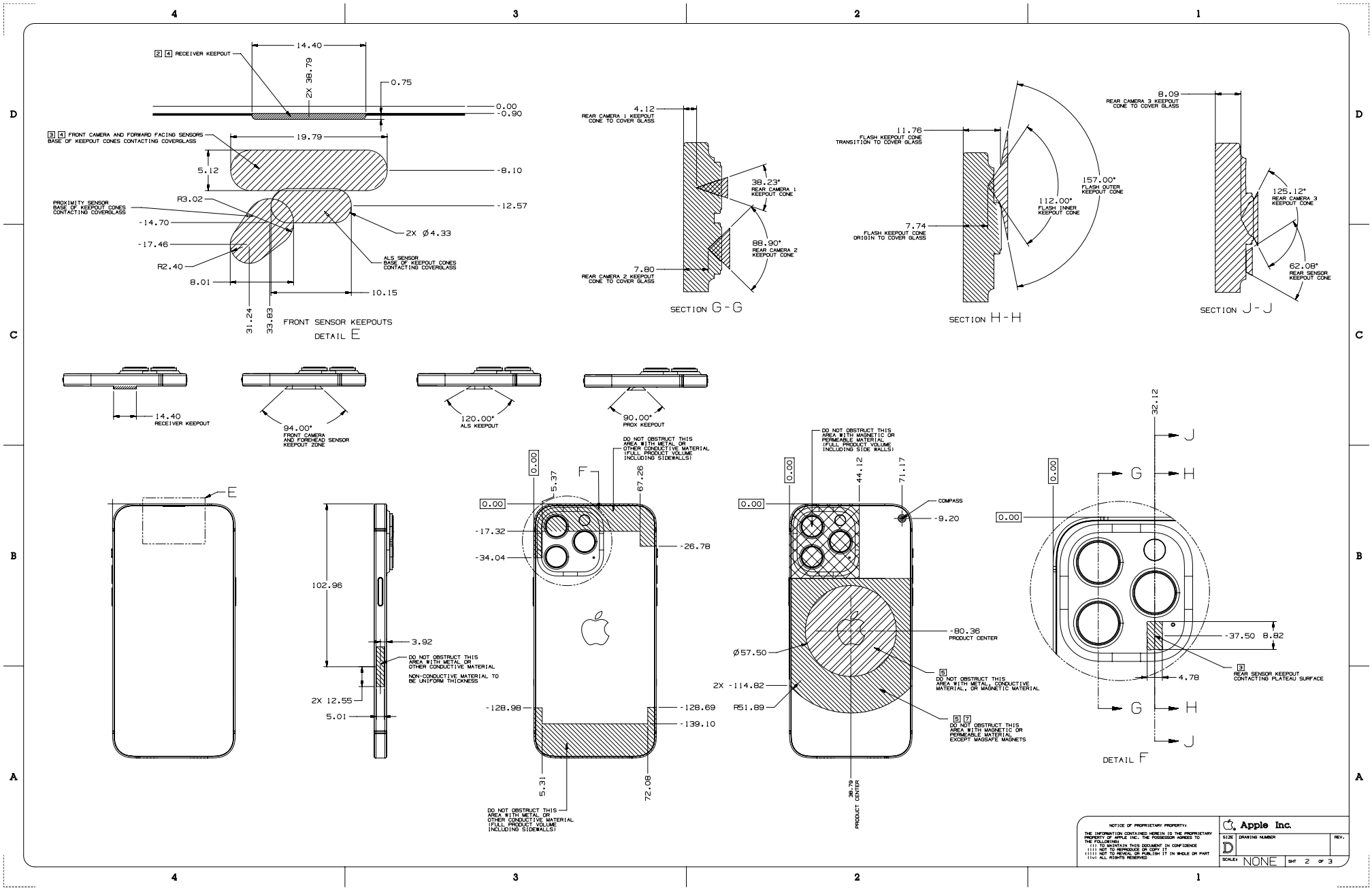

Copyright © 2024 Apple Inc. All Rights Reserved.

58.15 iPhone 14 Pro Max 3 of 3

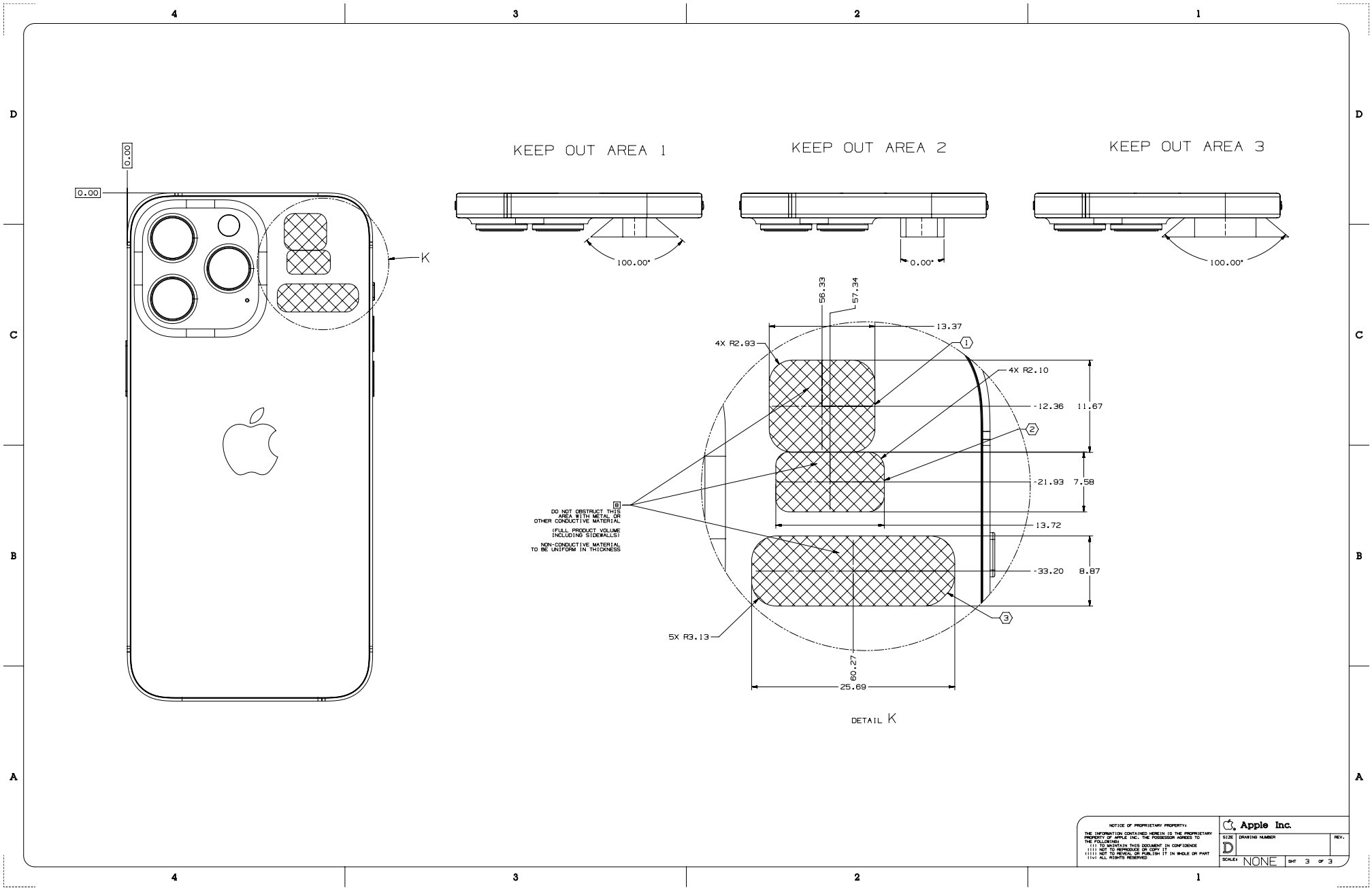

Copyright © 2024 Apple Inc. All Rights Reserved.

58.16 iPhone 14 Pro 1 of 3

NOTES: (UNLESS OTHERWISE SPECIFIED)

1. NO METAL CONTACT WITH iPHONE.
2. DO NOT OBSTRUCT PORTS.
3. DO NOT OBSTRUCT THE IMAGING FEATURES: FRONT CAMERA, REAR CAMERAS, REAR FLASH.
4. DO NOT OBSTRUCT FORWARD FACING SENSORS.
5. RELATIVE MAGNETIC PERMEABILITY OF ANY METAL USED ON CASE: 1.05 MAX, PER ASTM A342/A342M-14.
6. DO NOT TOUCH GLASS.
7. NO MAGNETS ON REAR OF PRODUCT EXCEPT MAGSAFE MAGNETS.
8. CASE THICKNESS ON BACKSIDE OF PRODUCT: 2.1 mm MAX TO ENSURE FULL FUNCTIONALITY.

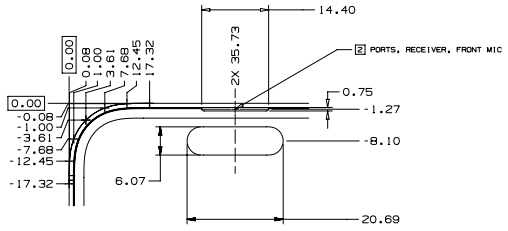

CORNER PROFILE (ALL FOUR CORNERS)
DETAIL A

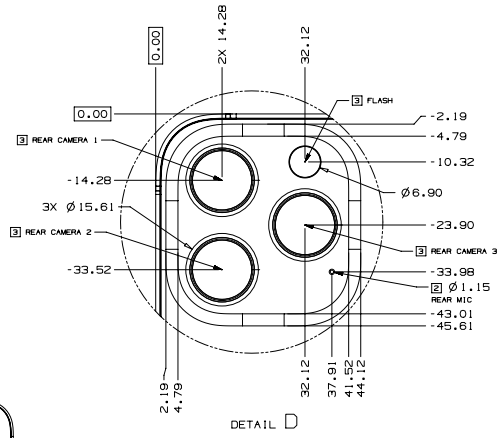

DETAIL D

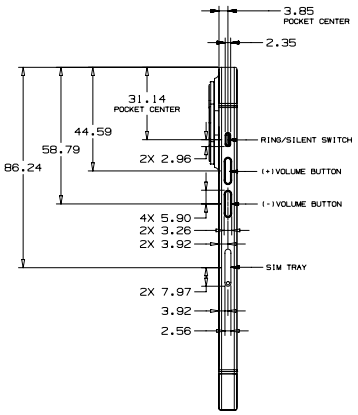

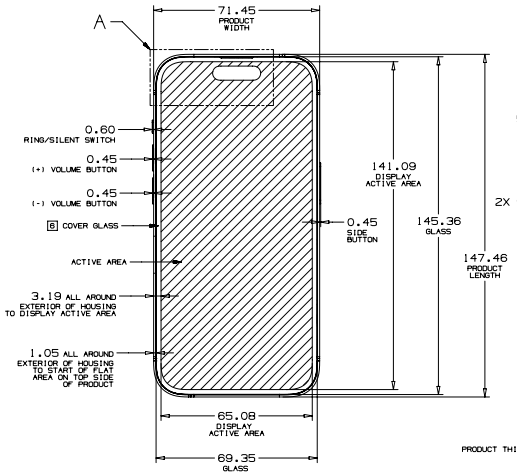

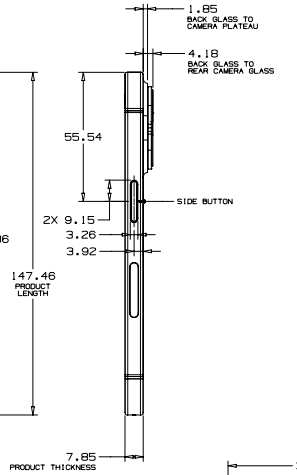

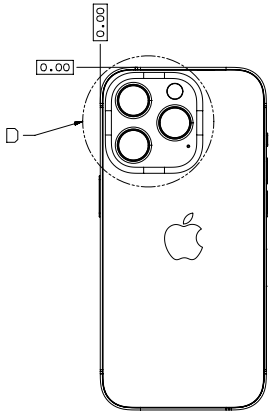

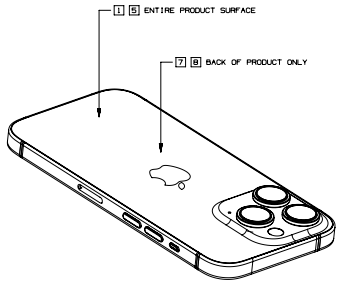

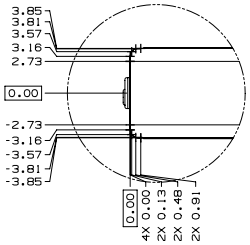

PROFILE (ALL SIDES)
DETAIL B

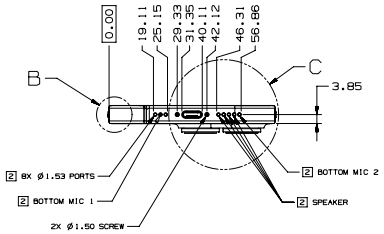

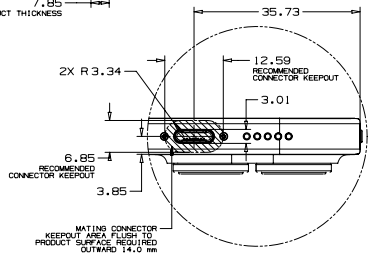

DETAIL C

METRIC	Apple Inc.
DRAWTER / DATE	NOTICE OF PROPRIETARY PROPERTY: THE INFORMATION CONTAINED HEREIN IS THE PROPRIETARY PROPERTY OF APPLE INC. THE POSSESSOR AGREES TO THE FOLLOWING: (i) TO MAINTAIN THIS DOCUMENT IN CONFIDENCE (ii) NOT TO REPRODUCE OR COPY IT (iii) NOT TO REVEAL OR PUBLISH IT IN WHOLE OR PART (iv) ALL RIGHTS RESERVED
DESIGNER / DATE	TITLE: IPHONE 14 PRO
DIMENSIONS ARE IN MILLIMETERS TOLERANCES 0 < - < 2 ±0.05 2 < - < 10 ±0.08 10 < - < 50 ±0.10 50 < - < 100 ±0.20 100 < - < 200 ±0.30 200 < - ±0.40 ANGLES ±0.50° DO NOT SCALE DRAWING	DRAWING NUMBER / REV.
THIRD ANGLE PROJECTION / SIZE D	SCALE NONE / SHT 1 OF 3

NX GENERATED

58.17 iPhone 14 Pro 2 of 3

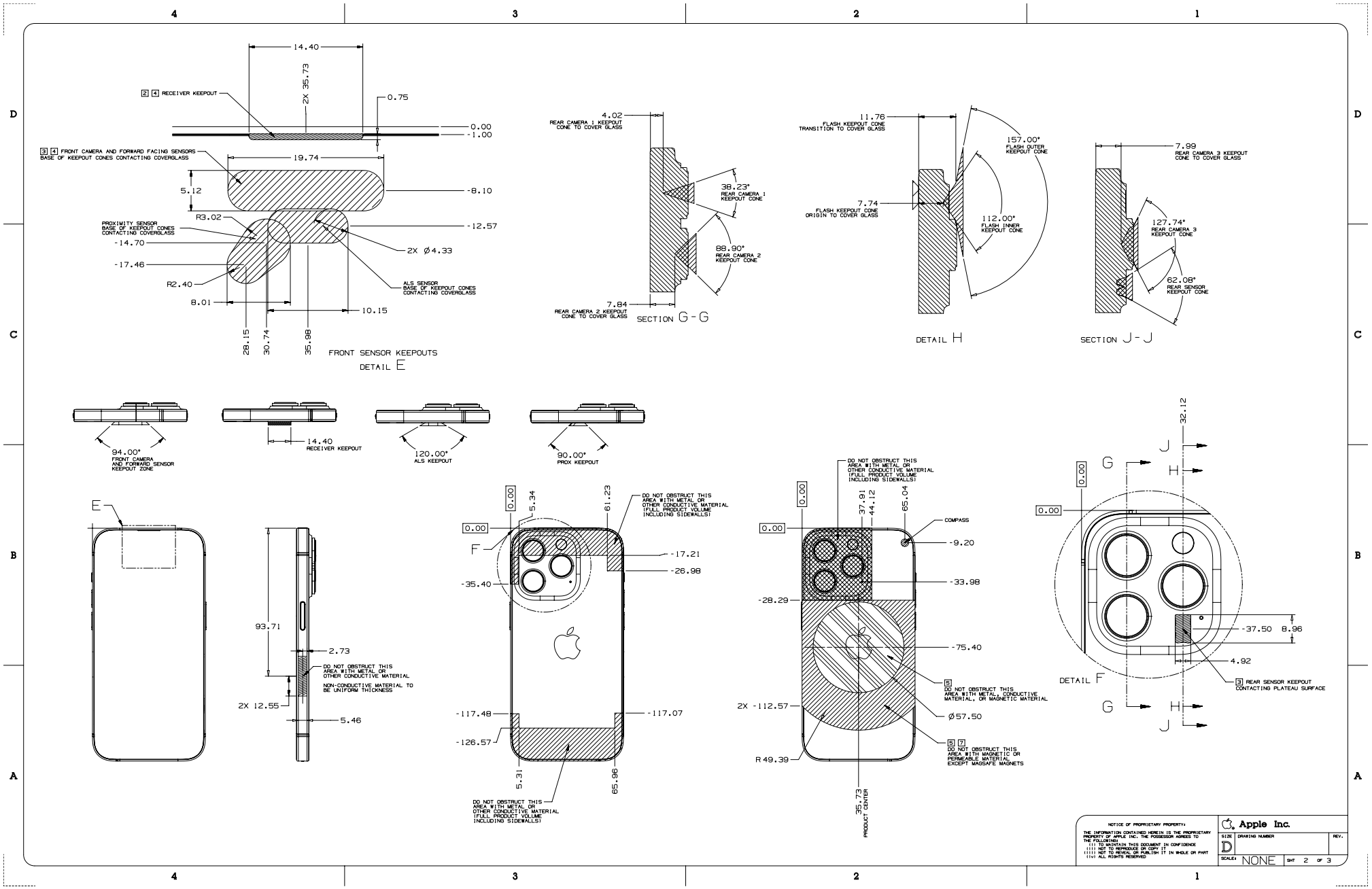

58.18 iPhone 14 Pro 3 of 3

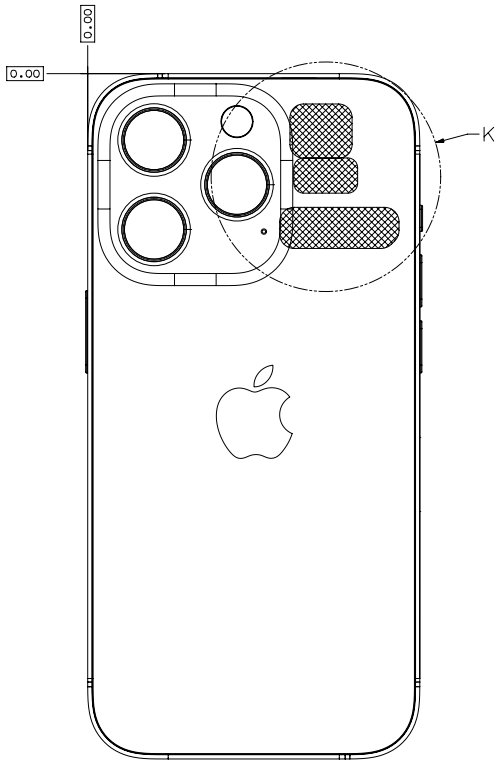

KEEP OUT AREA 1

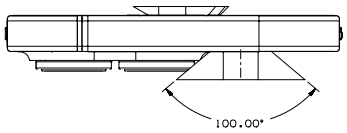

KEEP OUT AREA 2

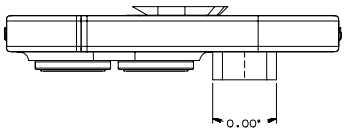

KEEP OUT AREA 3

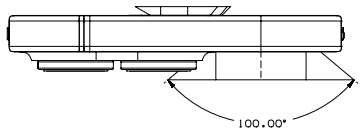

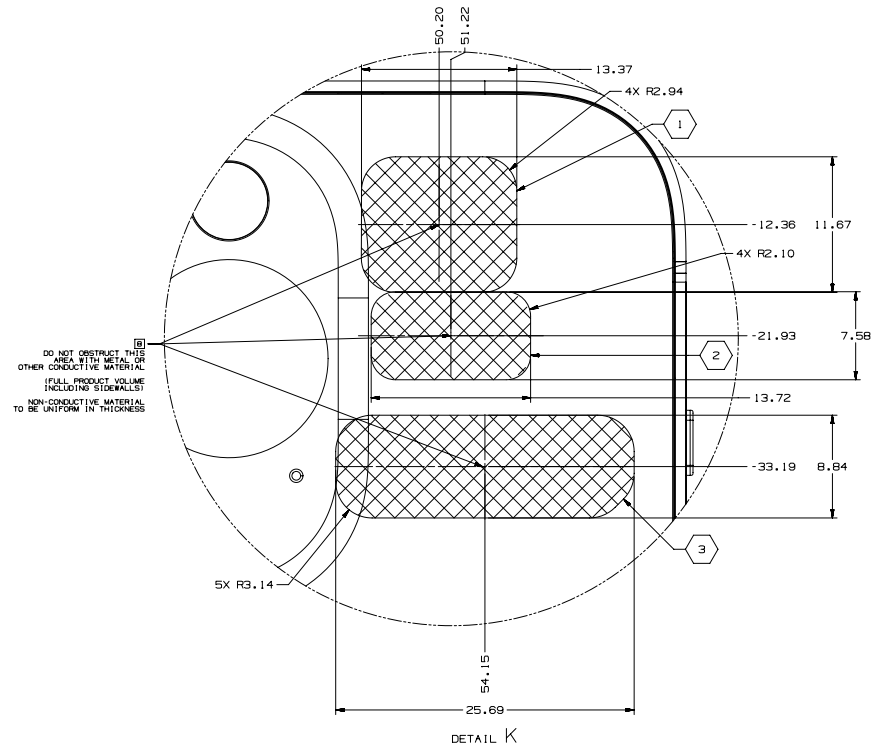

DETAIL K

NOTICE OF PROPRIETARY PROPERTY:
THE INFORMATION CONTAINED HEREIN IS THE PROPRIETARY PROPERTY OF APPLE INC. THE POSSESSOR AGREES TO THE FOLLOWING:
(i) TO MAINTAIN THIS DOCUMENT IN CONFIDENCE
(ii) NOT TO REPRODUCE OR COPY IT
(iii) NOT TO REVEAL OR PUBLISH IT IN WHOLE OR PART
(iv) ALL RIGHTS RESERVED

Apple Inc.

SIZE	DRAWING NUMBER	REV.
D		

SCALE: NONE SHT 3 OF 3

58.19 iPhone 14 Plus 1 of 3

NOTES: (UNLESS OTHERWISE SPECIFIED)

1. NO METAL CONTACT WITH iPHONE.
2. DO NOT OBSTRUCT PORTS.
3. DO NOT OBSTRUCT THE IMAGING FEATURES: FRONT CAMERA, REAR CAMERAS, REAR FLASH.
4. DO NOT OBSTRUCT FORWARD FACING SENSORS.
5. RELATIVE MAGNETIC PERMEABILITY OF ANY METAL USED ON CASE: 1.05 MAX, PER ASTM A342/A342M-14.
6. DO NOT TOUCH GLASS.
7. NO MAGNETS ON REAR OF PRODUCT EXCEPT MAGSAFE MAGNETS.
8. CASE THICKNESS ON BACKSIDE OF PRODUCT: 2.1 mm MAX TO ENSURE FULL FUNCTIONALITY.

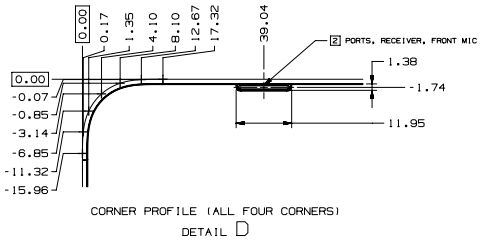

CORNER PROFILE (ALL FOUR CORNERS)
DETAIL D

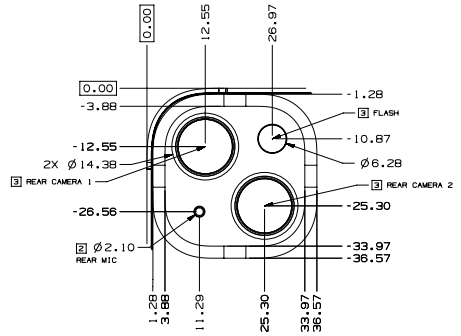

DETAIL A

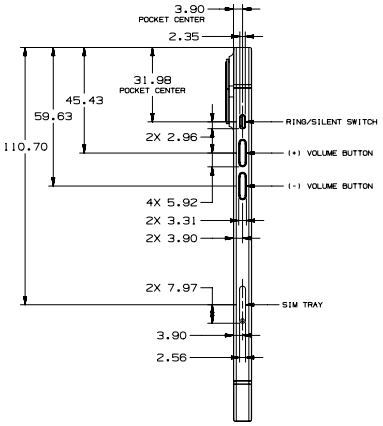

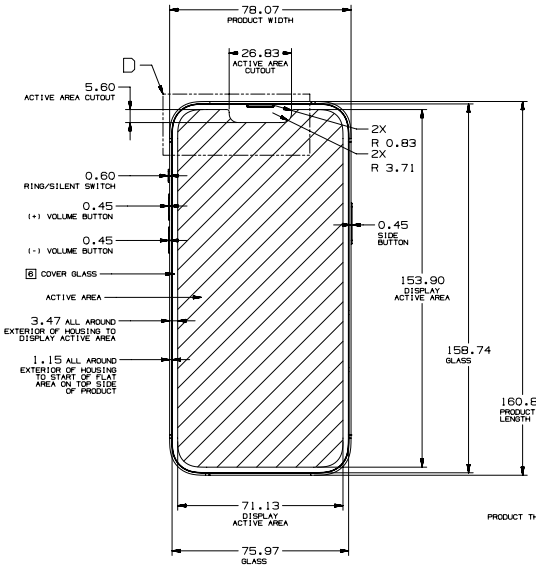

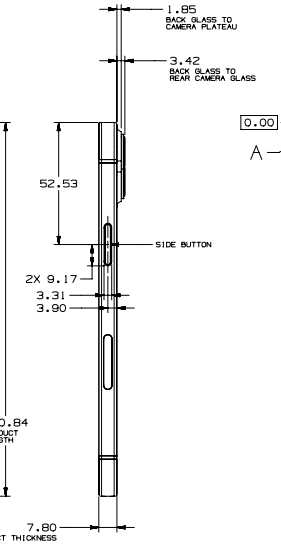

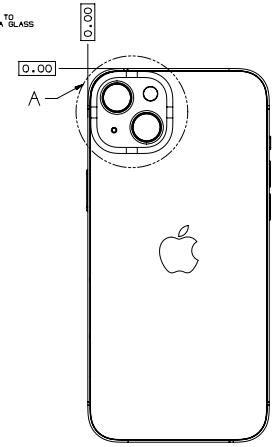

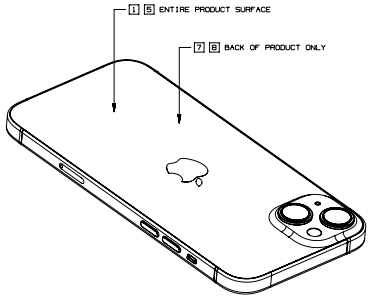

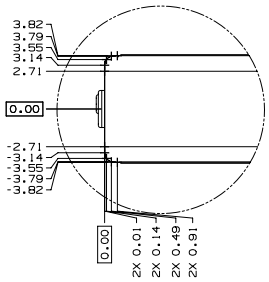

DETAIL B

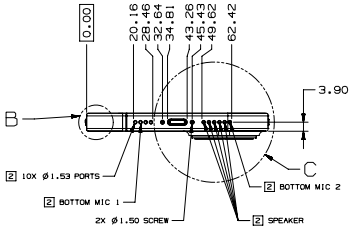

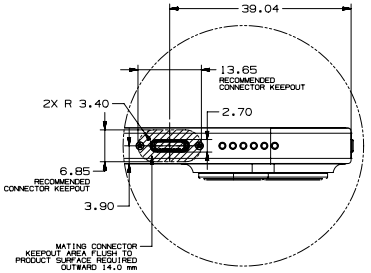

DETAIL C

METRIC	Apple Inc.
DRAFTER / DATE	NOTICE OF PROPRIETARY PROPERTY: THE INFORMATION CONTAINED HEREIN IS THE PROPRIETARY PROPERTY OF APPLE INC. THE POSSESSOR AGREES TO THE FOLLOWING: (i) TO MAINTAIN THIS DOCUMENT IN CONFIDENCE (ii) NOT TO REPRODUCE OR COPY IT (iii) NOT TO REVEAL OR PUBLISH IT IN WHOLE OR PART (iv) ALL RIGHTS RESERVED
DESIGNER / DATE	
DIMENSIONS ARE IN MILLIMETERS TOLERANCES 0 < - < 2 ±0.05 2 < - < 10 ±0.08 10 < - < 50 ±0.10 50 < - < 100 ±0.20 100 < - < 200 ±0.30 200 < - ±0.40 ANGLES ±0.50° DO NOT SCALE DRAWING	TITLE: IPHONE 14 PLUS
THIRD ANGLE PROJECTION / SIZE D	DRAWING NUMBER / REV.
SCALE NONE	SHT 1 OF 3

NX GENERATED

58.20 iPhone 14 Plus 2 of 3

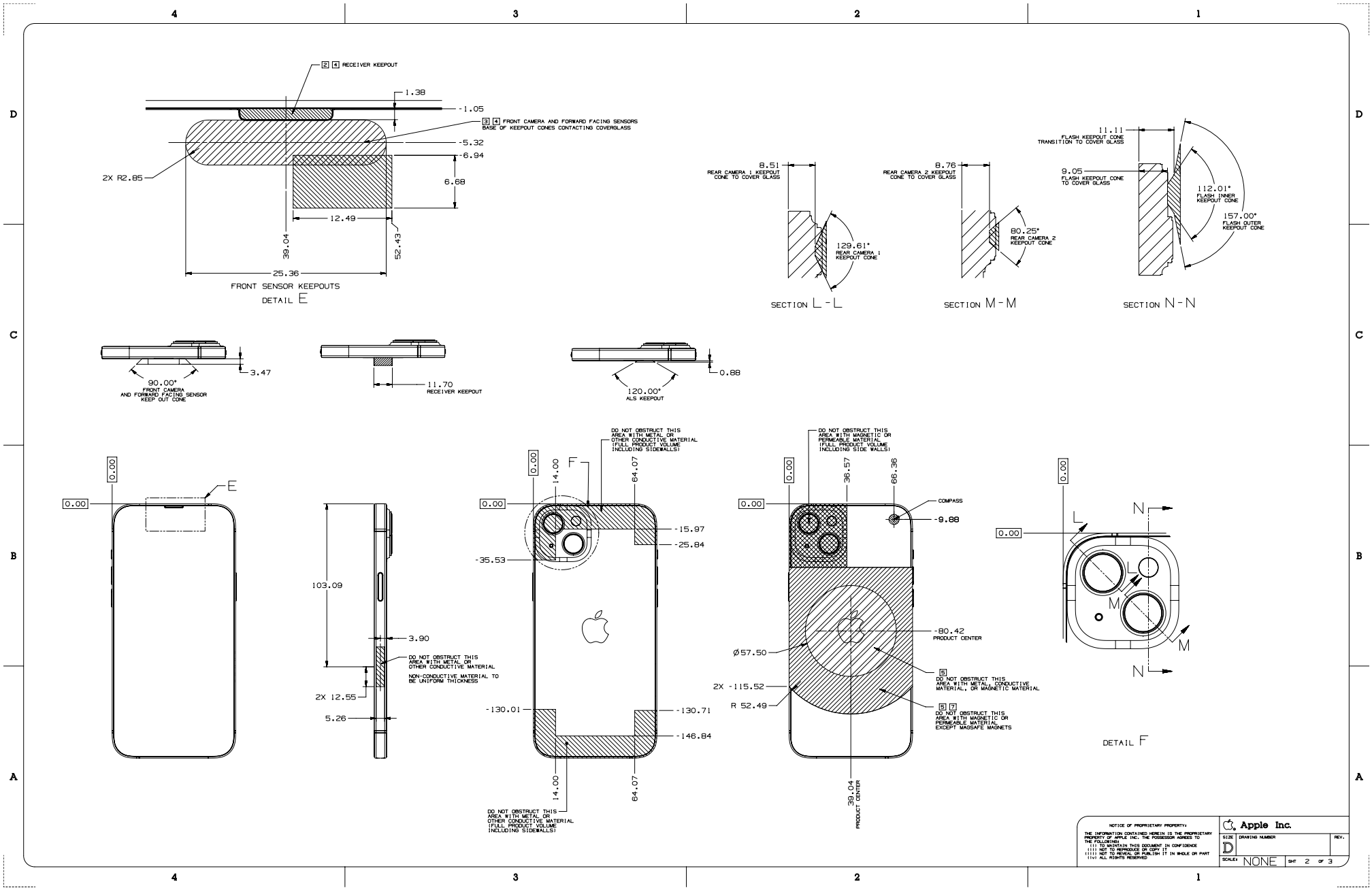

Copyright © 2024 Apple Inc. All Rights Reserved.

58.21 iPhone 14 Plus 3 of 3

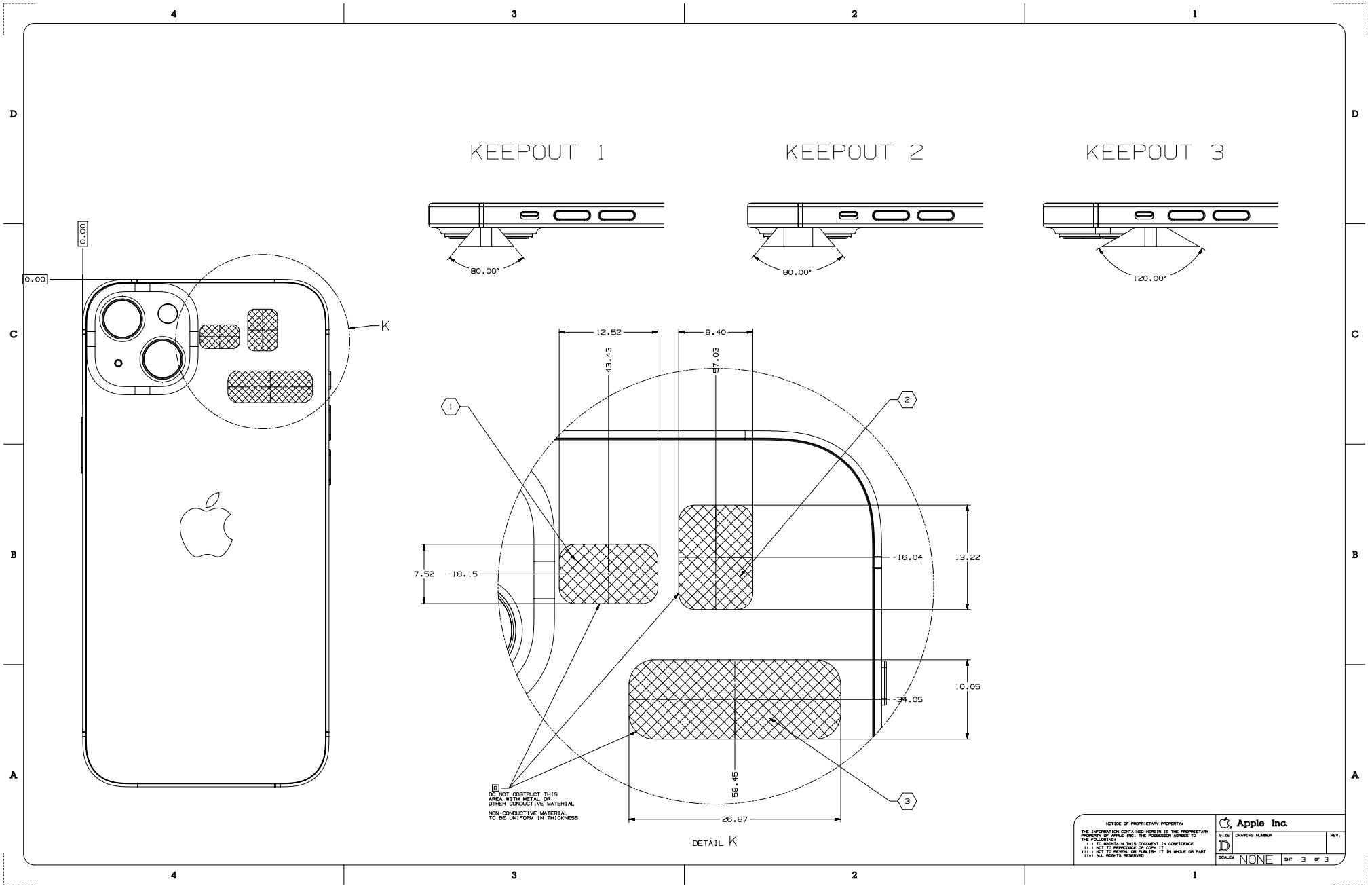

58.22 iPhone 14 1 of 3

NOTES: (UNLESS OTHERWISE SPECIFIED)

1. NO METAL CONTACT WITH iPHONE.
2. DO NOT OBSTRUCT PORTS.
3. DO NOT OBSTRUCT THE IMAGING FEATURES: FRONT CAMERA, REAR CAMERAS, REAR FLASH.
4. DO NOT OBSTRUCT FORWARD FACING SENSORS.
5. RELATIVE MAGNETIC PERMEABILITY OF ANY METAL USED ON CASE: 1.05 MAX, PER ASTM A342/A342M-14.
6. DO NOT TOUCH GLASS.
7. NO MAGNETS ON REAR OF PRODUCT EXCEPT MAGSAFE MAGNETS.
8. CASE THICKNESS ON BACKSIDE OF PRODUCT: 2.1 mm MAX TO ENSURE FULL FUNCTIONALITY.

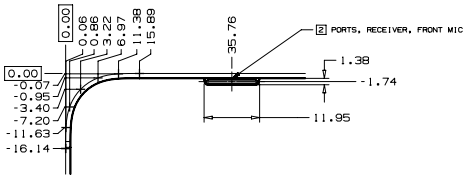

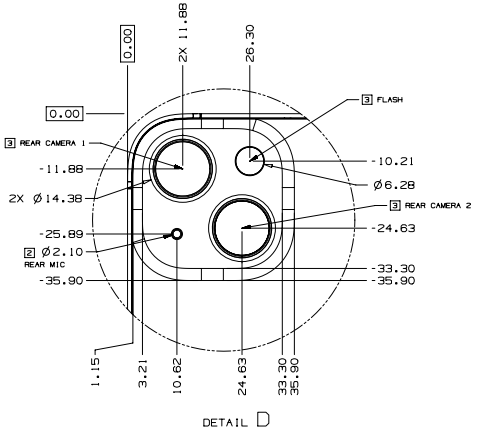

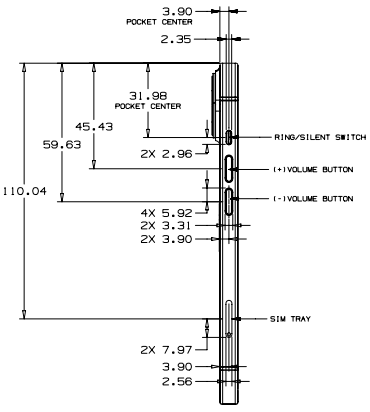

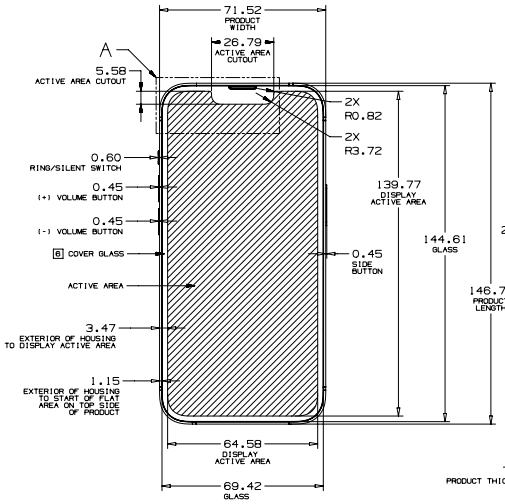

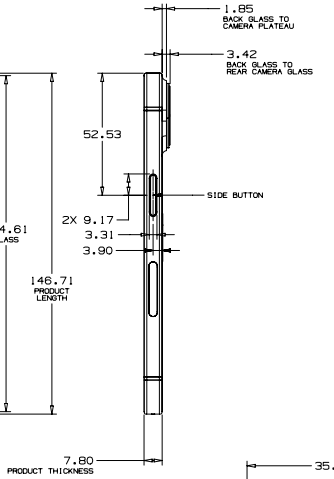

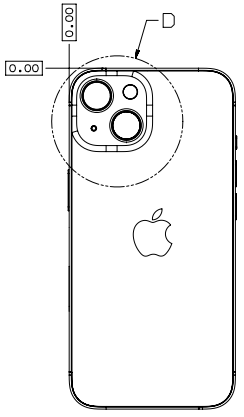

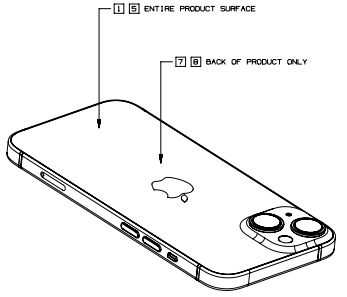

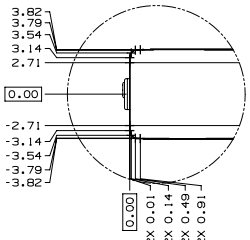

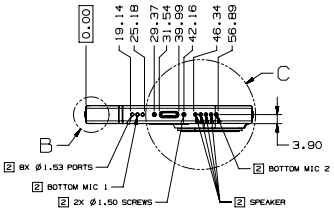

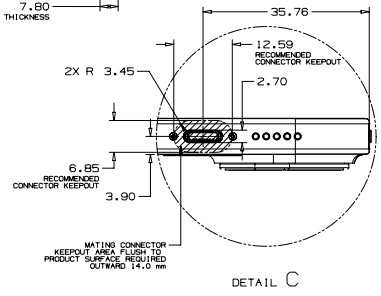

METRIC	Apple Inc.
DRAWTER / DATE	NOTICE OF PROPRIETARY PROPERTY: THE INFORMATION CONTAINED HEREIN IS THE PROPRIETARY PROPERTY OF APPLE INC. THE POSSESSOR AGREES TO THE FOLLOWING: (i) TO MAINTAIN THIS DOCUMENT IN CONFIDENCE (ii) NOT TO REPRODUCE OR COPY IT (iii) NOT TO REVEAL OR PUBLISH IT IN WHOLE OR PART (iv) ALL RIGHTS RESERVED
DESIGNER / DATE	
DIMENSIONS ARE IN MILLIMETERS TOLERANCES 0 < - < 2 ±0.05 2 < - < 10 ±0.08 10 < - < 50 ±0.10 50 < - < 100 ±0.20 100 < - < 200 ±0.30 200 < - ±0.40 ANGLES ±0.50° DO NOT SCALE DRAWING	TITLE: IPHONE 14
THIRD ANGLE PROJECTION / SIZE D	DRAWING NUMBER / REV.
	SCALE NONE / SHT 1 OF 3

NX GENERATED

58.23 iPhone 14 2 of 3

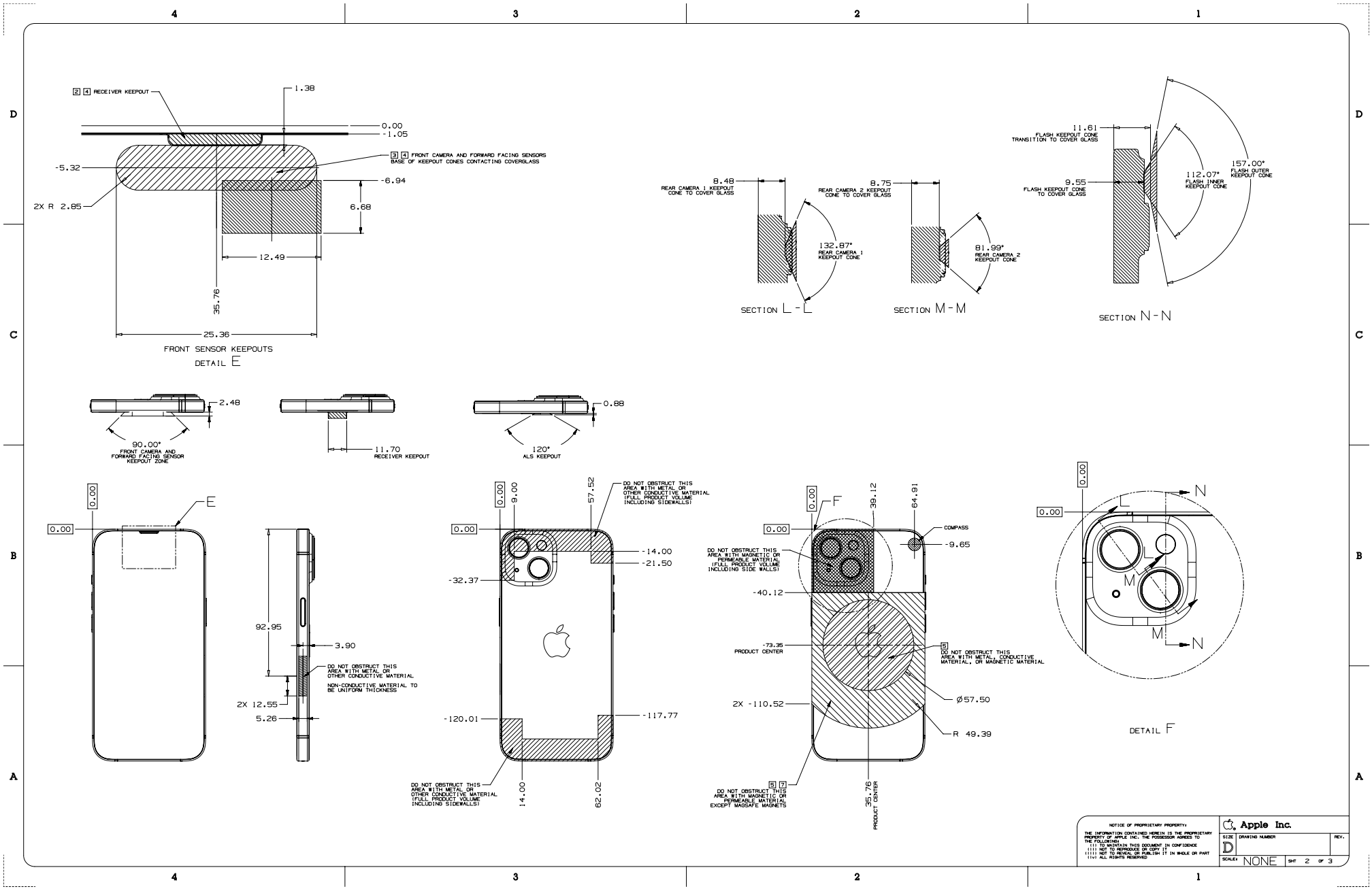

Copyright © 2024 Apple Inc. All Rights Reserved.

58.24 iPhone 14 3 of 3

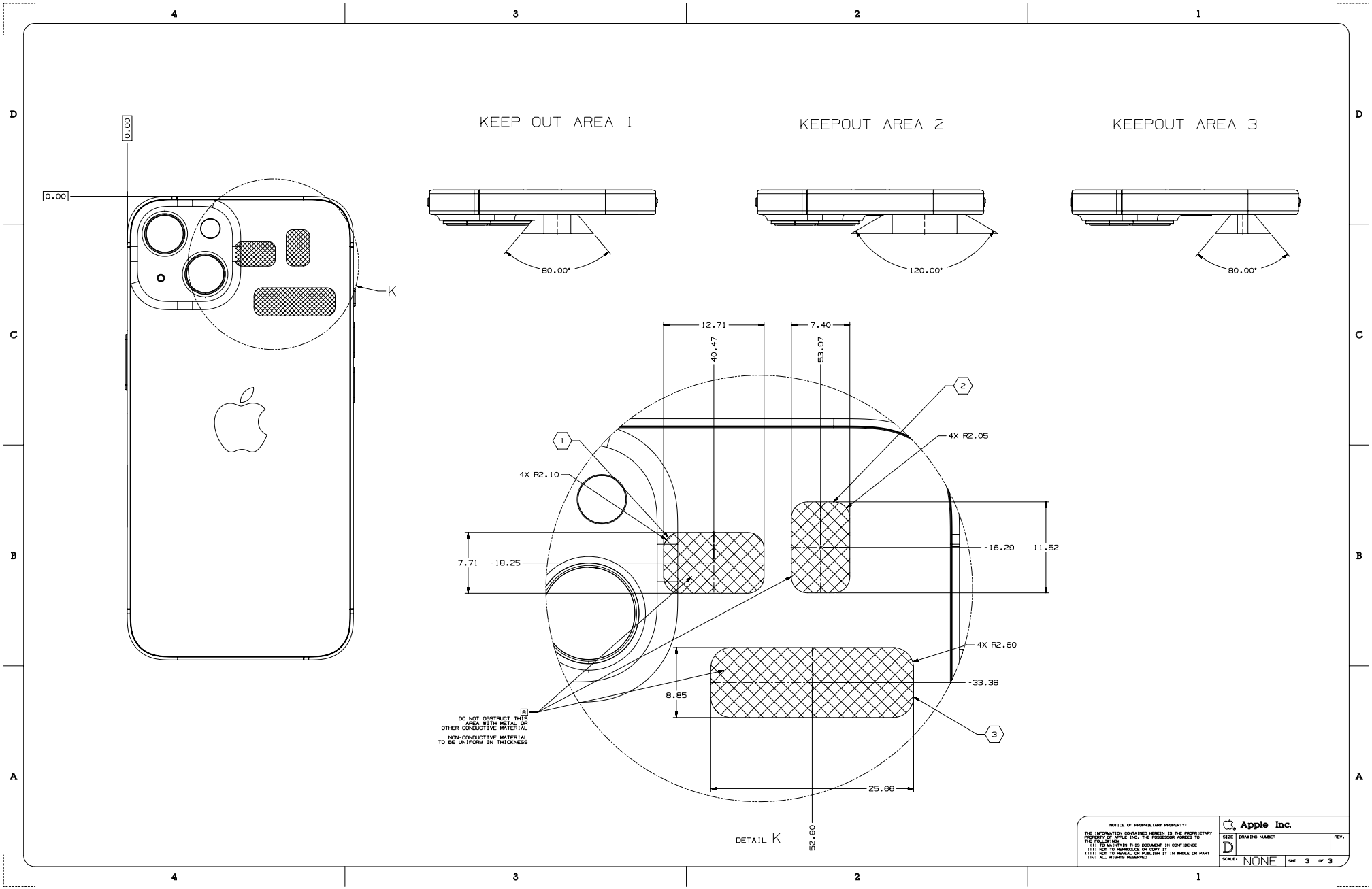

Copyright © 2024 Apple Inc. All Rights Reserved.

58.25 iPhone 13 Pro Max 1 of 2

NOTES: (UNLESS OTHERWISE SPECIFIED)

1. NO METAL CONTACT WITH IPHONE.
2. DO NOT OBSTRUCT PORTS.
3. DO NOT OBSTRUCT THE IMAGING FEATURES: FRONT CAMERA, REAR CAMERAS, REAR FLASH.
4. DO NOT OBSTRUCT FORWARD FACING SENSORS.
5. RELATIVE MAGNETIC PERMEABILITY OF ANY METAL USED ON CASE: 1.05 MAX, PER ASTM A342/A342M-14.
6. DO NOT TOUCH GLASS.
7. NO MAGNETS ON REAR OF PRODUCT EXCEPT MAGSAFE MAGNETS.
8. CASE THICKNESS ON BACKSIDE OF PRODUCT: 2.1 mm MAX TO ENSURE FULL FUNCTIONALITY.

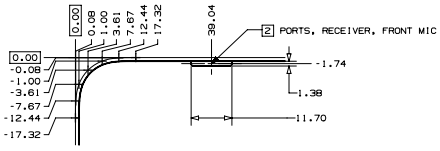

CORNER PROFILE (ALL FOUR CORNERS)
DETAIL A

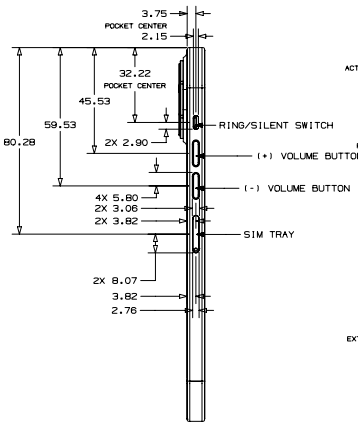

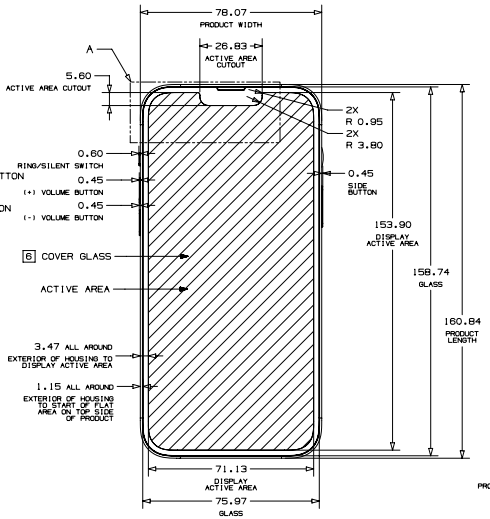

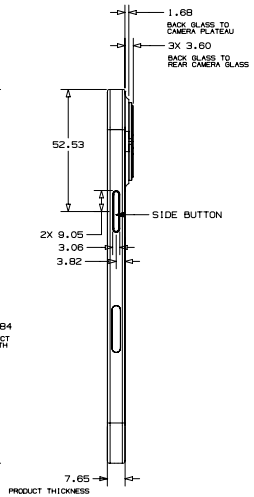

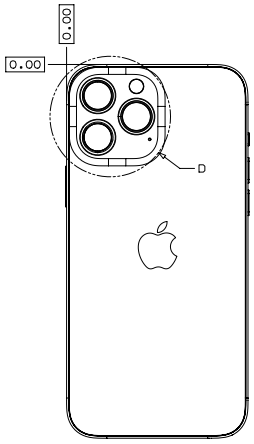

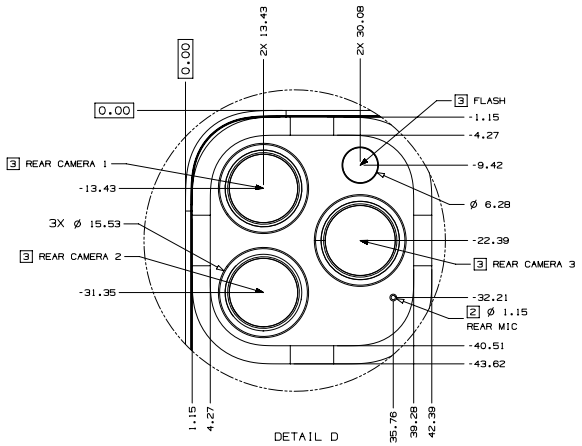

DETAIL D

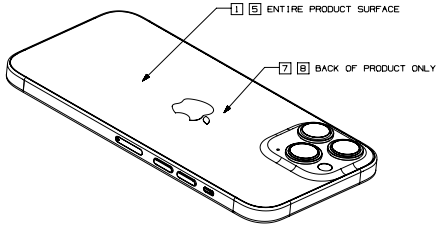

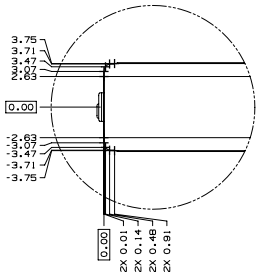

PROFILE (ALL SIDES)
DETAIL B

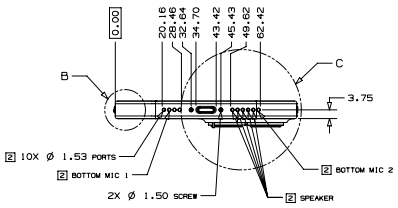

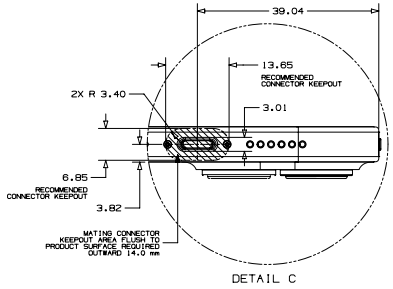

DETAIL C

METRIC		Apple Inc.	
DRAFTER	DATE	NOTICE OF PROPRIETARY PROPERTY: THE INFORMATION CONTAINED HEREIN IS THE PROPRIETARY PROPERTY OF APPLE INC. THE POSSESSOR AGREES TO THE FOLLOWING: (i) TO MAINTAIN THIS DOCUMENT IN CONFIDENCE (ii) NOT TO REPRODUCE OR COPY IT (iii) NOT TO REVEAL OR PUBLISH IT IN WHOLE OR PART (iv) ALL RIGHTS RESERVED	
DESIGNER	DATE		
0 < - < 2 ±0.05 2 < - < 10 ±0.08 10 < - < 50 ±0.10 50 < - < 100 ±0.20 100 < - < 200 ±0.30 200 < - ±0.40 ANGLES ±0.50°		TITLE: iPhone 13 Pro Max	
		DRAWING NUMBER	REV.
THIRD ANGLE PROJECTION	SIZE D	SCALE NONE	SHT 1 OF 2

NX GENERATED

Copyright © 2024 Apple Inc. All Rights Reserved.

58.26 iPhone 13 Pro Max 2 of 2

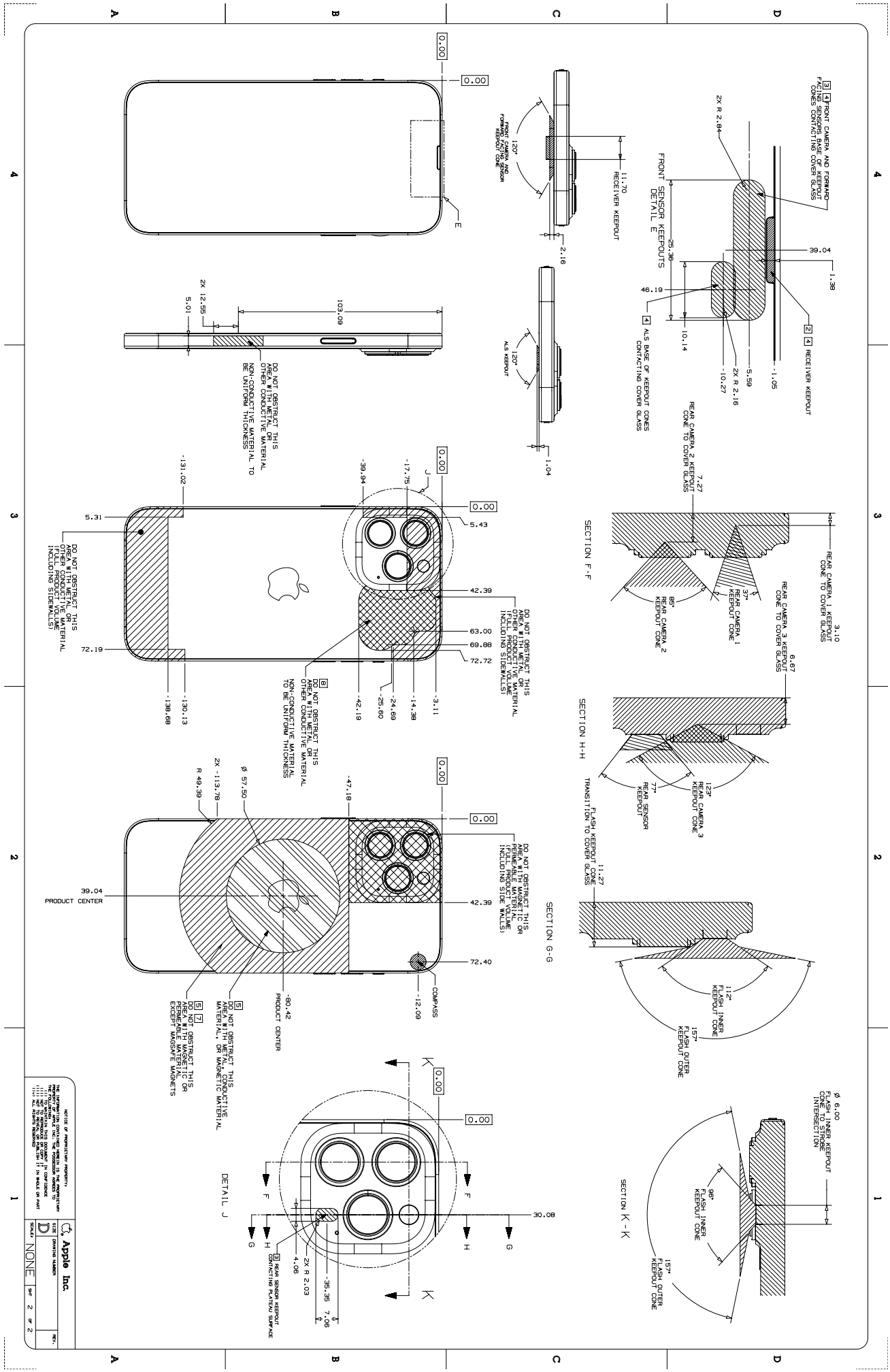

2024-05-13 | Copyright © 2024 Apple Inc. All Rights Reserved.

58.27 iPhone 13 Pro 1 of 2

NOTES: (UNLESS OTHERWISE SPECIFIED)

1. NO METAL CONTACT WITH IPHONE.
2. DO NOT OBSTRUCT PORTS.
3. DO NOT OBSTRUCT THE IMAGING FEATURES: FRONT CAMERA, REAR CAMERAS, REAR FLASH.
4. DO NOT OBSTRUCT FORWARD FACING SENSORS.
5. RELATIVE MAGNETIC PERMEABILITY OF ANY METAL USED ON CASE: 1.05 MAX, PER ASTM A342/A342M-14.
6. DO NOT TOUCH GLASS.
7. NO MAGNETS ON REAR OF PRODUCT EXCEPT MAGSAFE MAGNETS.
8. CASE THICKNESS ON BACKSIDE OF PRODUCT: 2.1 mm MAX TO ENSURE FULL FUNCTIONALITY.

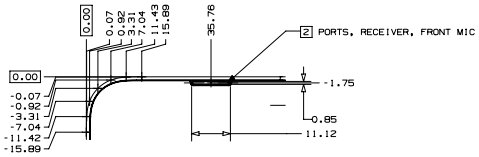

CORNER PROFILE (ALL FOUR CORNERS)
DETAIL A

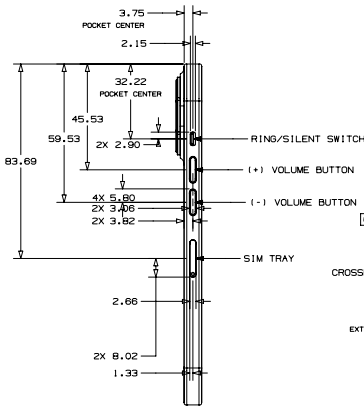

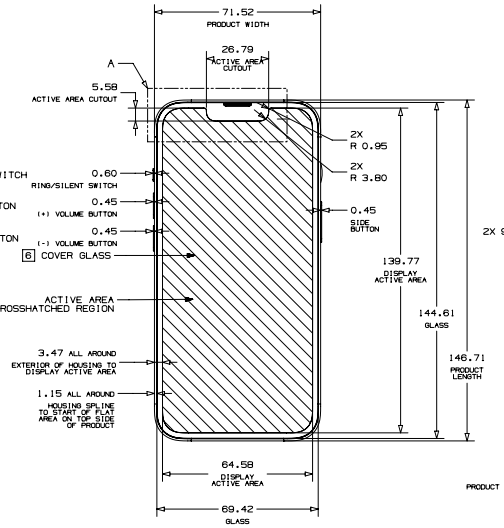

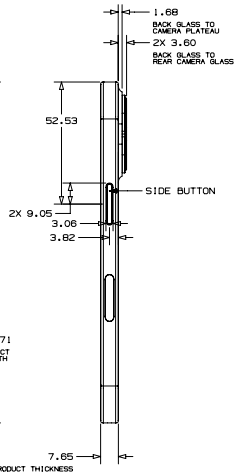

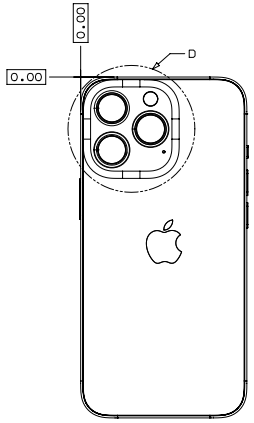

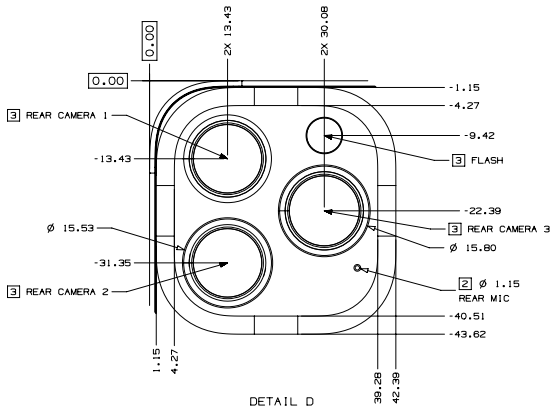

DETAIL D

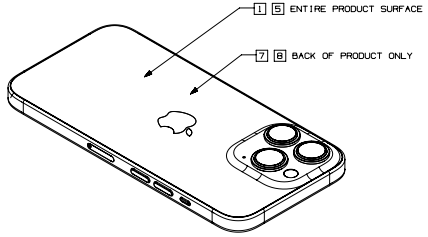

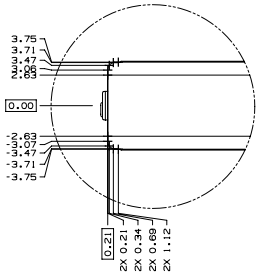

PROFILE (ALL SIDES)
DETAIL B

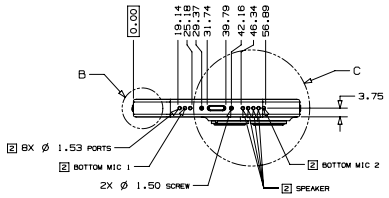

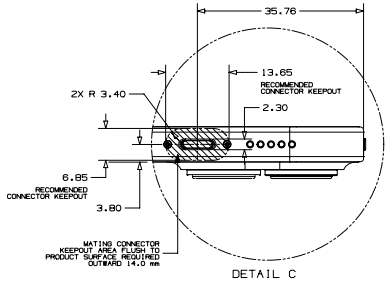

DETAIL C

METRIC	Apple Inc.
DRAFTER: APPLE INC. — DATE: 05/14/21	NOTICE OF PROPRIETARY PROPERTY: THE INFORMATION CONTAINED HEREIN IS THE PROPRIETARY PROPERTY OF APPLE INC. THE POSSESSOR AGREES TO THE FOLLOWING: (i) TO MAINTAIN THIS DOCUMENT IN CONFIDENCE (ii) NOT TO REPRODUCE OR COPY IT (iii) NOT TO REVEAL OR PUBLISH IT IN WHOLE OR PART (iv) ALL RIGHTS RESERVED
DESIGNER: APPLE INC. — DATE: 05/14/21	
0 < - < 2 ±0.05 2 < - < 10 ±0.08 10 < - < 50 ±0.10 50 < - < 100 ±0.20 100 < - < 200 ±0.30 200 < - ±0.40 ANGLES ±0.50°	TITLE: iPhone 13 Pro
	DRAWING NUMBER — REV.
THIRD ANGLE PROJECTION — SIZE D — SCALE NONE — SHT 1 OF 2	

NX GENERATED

Copyright © 2024 Apple Inc. All Rights Reserved.

58.28 iPhone 13 Pro 2 of 2

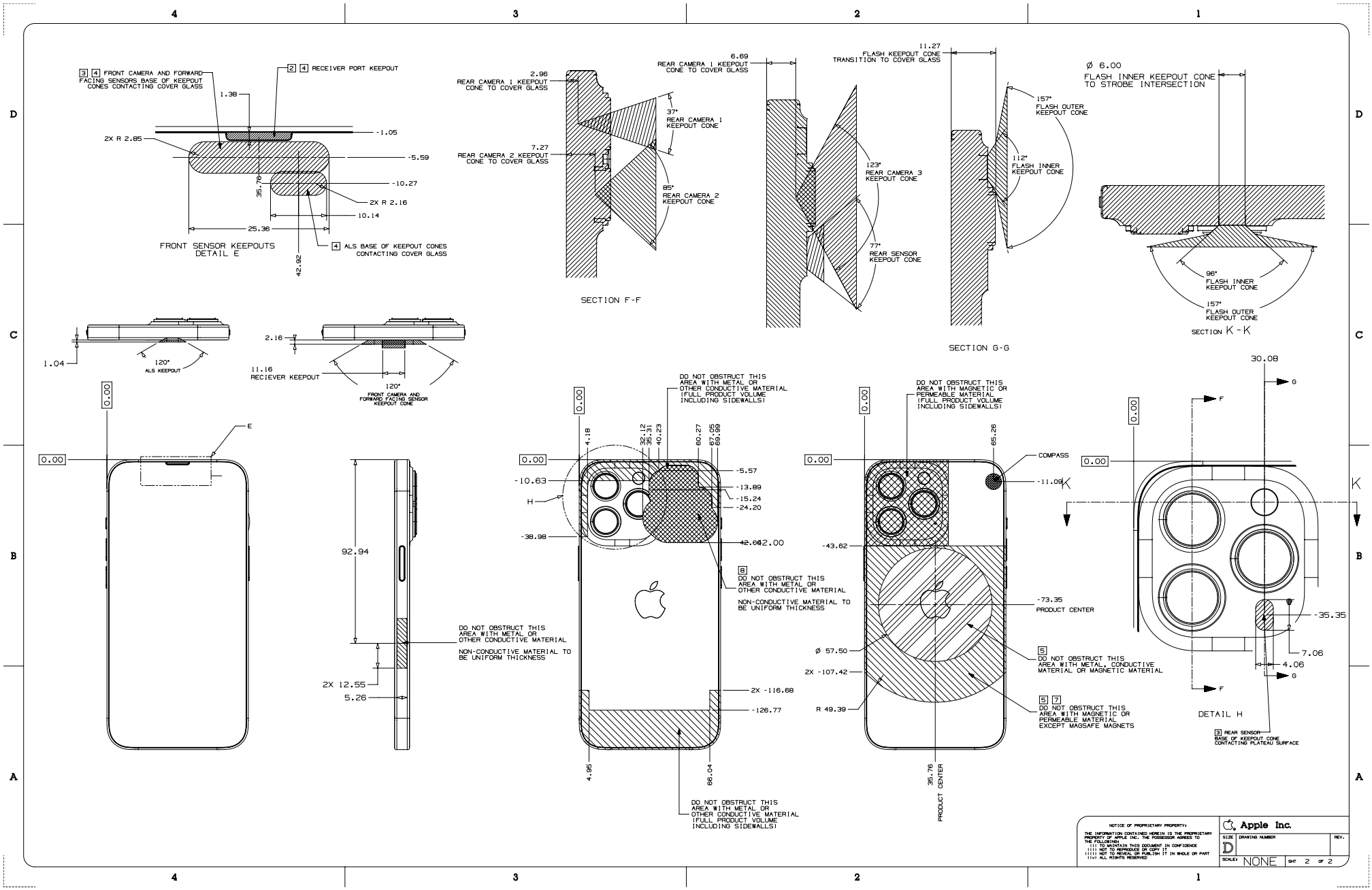

Copyright © 2024 Apple Inc. All Rights Reserved.

58.29 iPhone 13 1 of 2

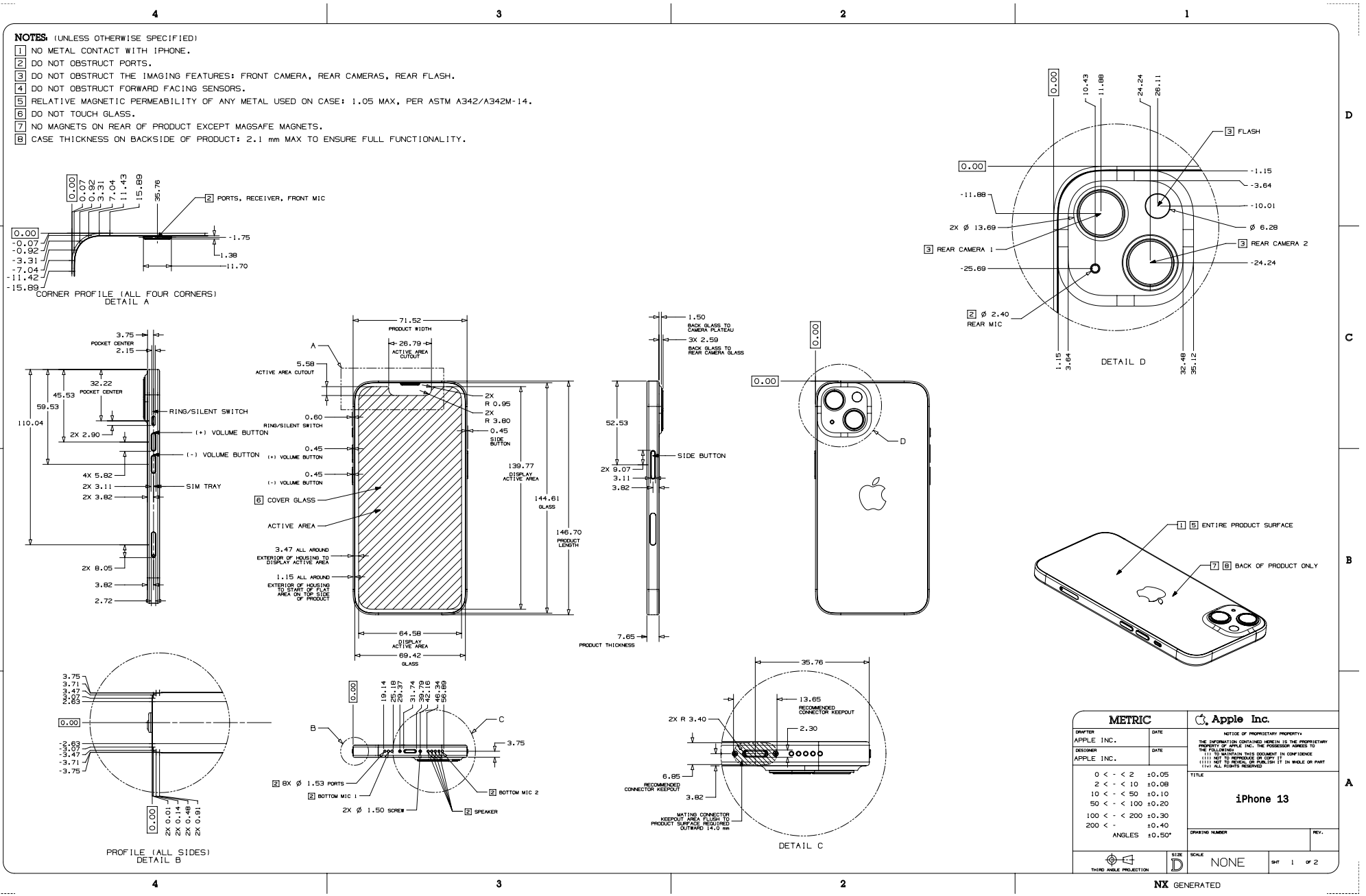

58.30 iPhone 13 2 of 2

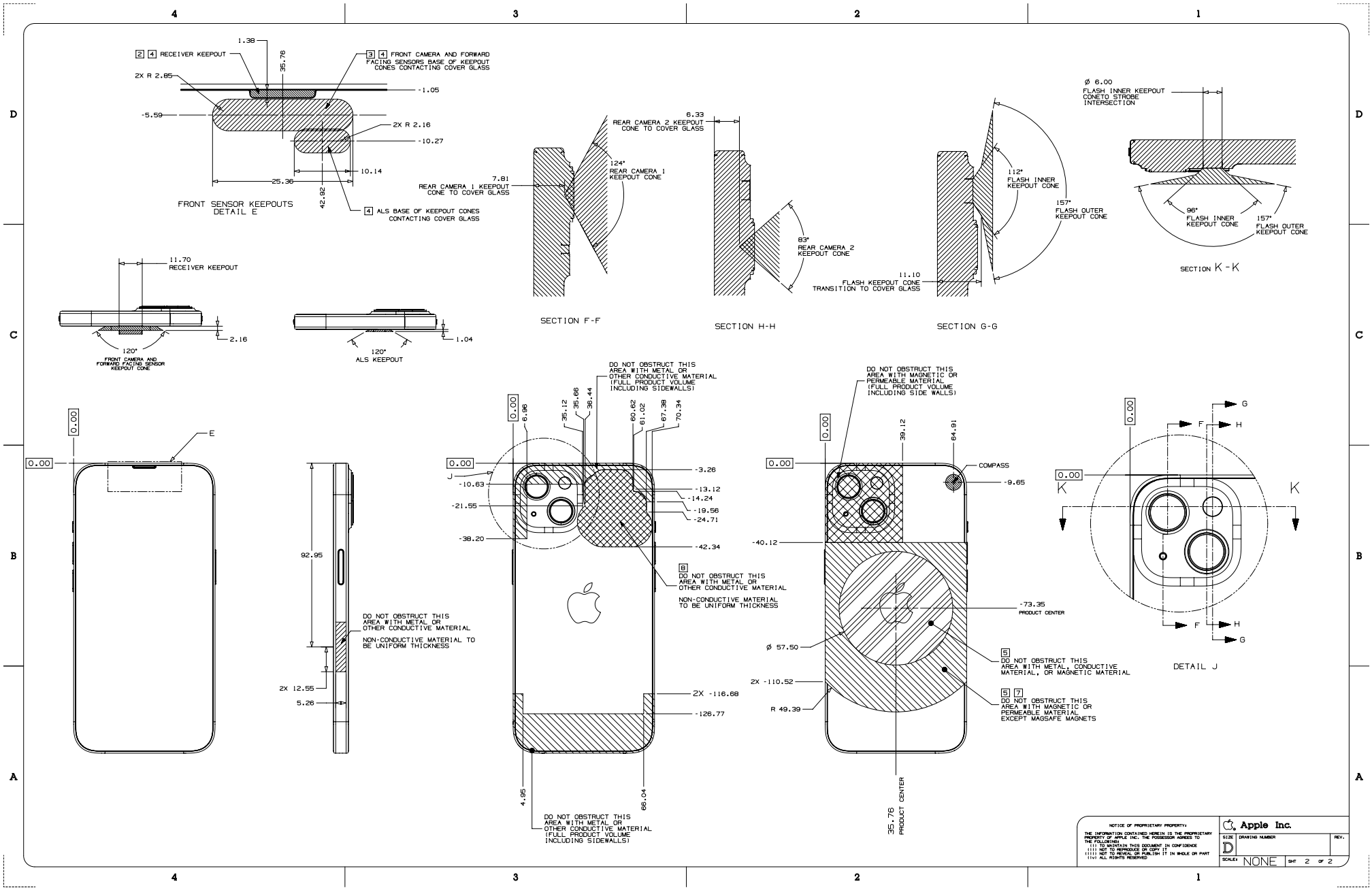

Copyright © 2024 Apple Inc. All Rights Reserved.

58.31 iPhone 13 mini 1 of 2

NOTES: (UNLESS OTHERWISE SPECIFIED)

1. NO METAL CONTACT WITH IPHONE.
2. DO NOT OBSTRUCT PORTS.
3. DO NOT OBSTRUCT THE IMAGING FEATURES: FRONT CAMERA, REAR CAMERAS, REAR FLASH.
4. DO NOT OBSTRUCT FORWARD FACING SENSORS.
5. RELATIVE MAGNETIC PERMEABILITY OF ANY METAL USED ON CASE: 1.05 MAX, PER ASTM A342/A342M-14.
6. DO NOT TOUCH GLASS.
7. NO MAGNETS ON REAR OF PRODUCT EXCEPT MAGSAFE MAGNETS.
8. CASE THICKNESS ON BACKSIDE OF PRODUCT: 2.1 mm MAX TO ENSURE FULL FUNCTIONALITY.

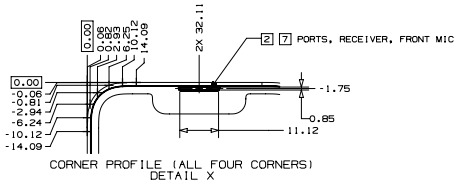

CORNER PROFILE (ALL FOUR CORNERS)
DETAIL X

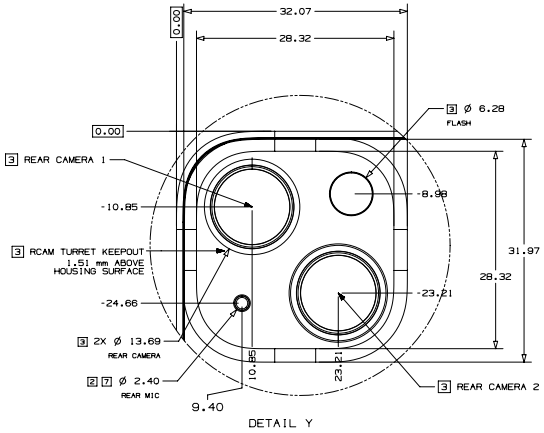

DETAIL Y

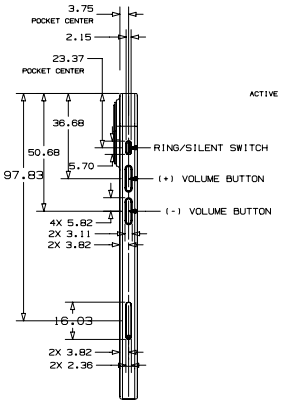

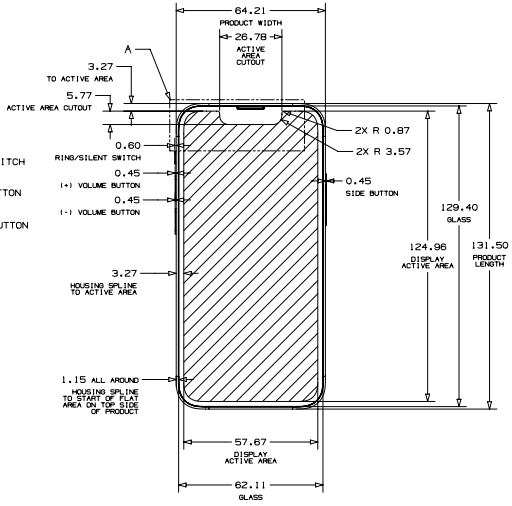

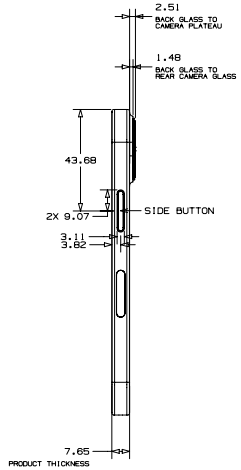

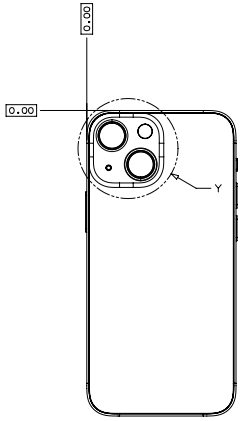

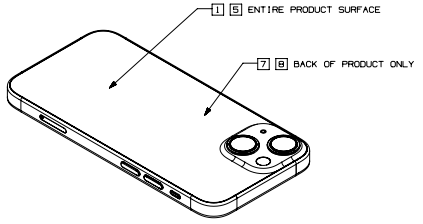

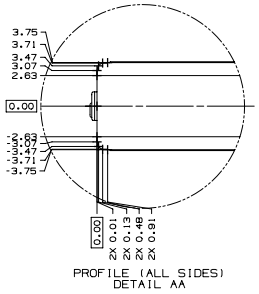

PROFILE (ALL SIDES)
DETAIL AA

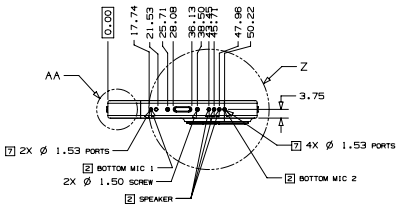

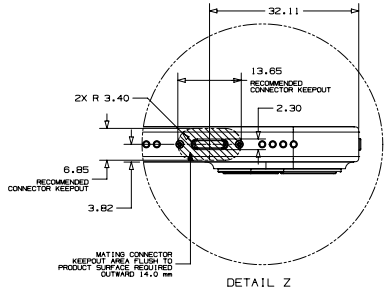

DETAIL Z

METRIC	Apple Inc.
DRAFTER: APPLE INC. DATE: 05/14/21	NOTICE OF PROPRIETARY PROPERTY: THE INFORMATION CONTAINED HEREIN IS THE PROPRIETARY PROPERTY OF APPLE INC. THE POSSESSOR AGREES TO THE FOLLOWING: (i) TO MAINTAIN THIS DOCUMENT IN CONFIDENCE (ii) NOT TO REPRODUCE OR COPY IT (iii) NOT TO REVERSE ENGINEER OR PUBLISH IT IN WHOLE OR PART (iv) ALL RIGHTS RESERVED
DESIGNER: APPLE INC. DATE: 05/14/21	TITLE: iPhone 13 mini
0 < - < 2 ±0.05 2 < - < 10 ±0.08 10 < - < 50 ±0.10 50 < - < 100 ±0.20 100 < - < 200 ±0.30 200 < - ±0.40 ANGLES ±0.50°	DRAWING NUMBER: REV.
THIRD ANGLE PROJECTION; SIZE D	SCALE: NONE; SHT 1 OF 2

NX GENERATED

58.32 iPhone 13 mini 2 of 2

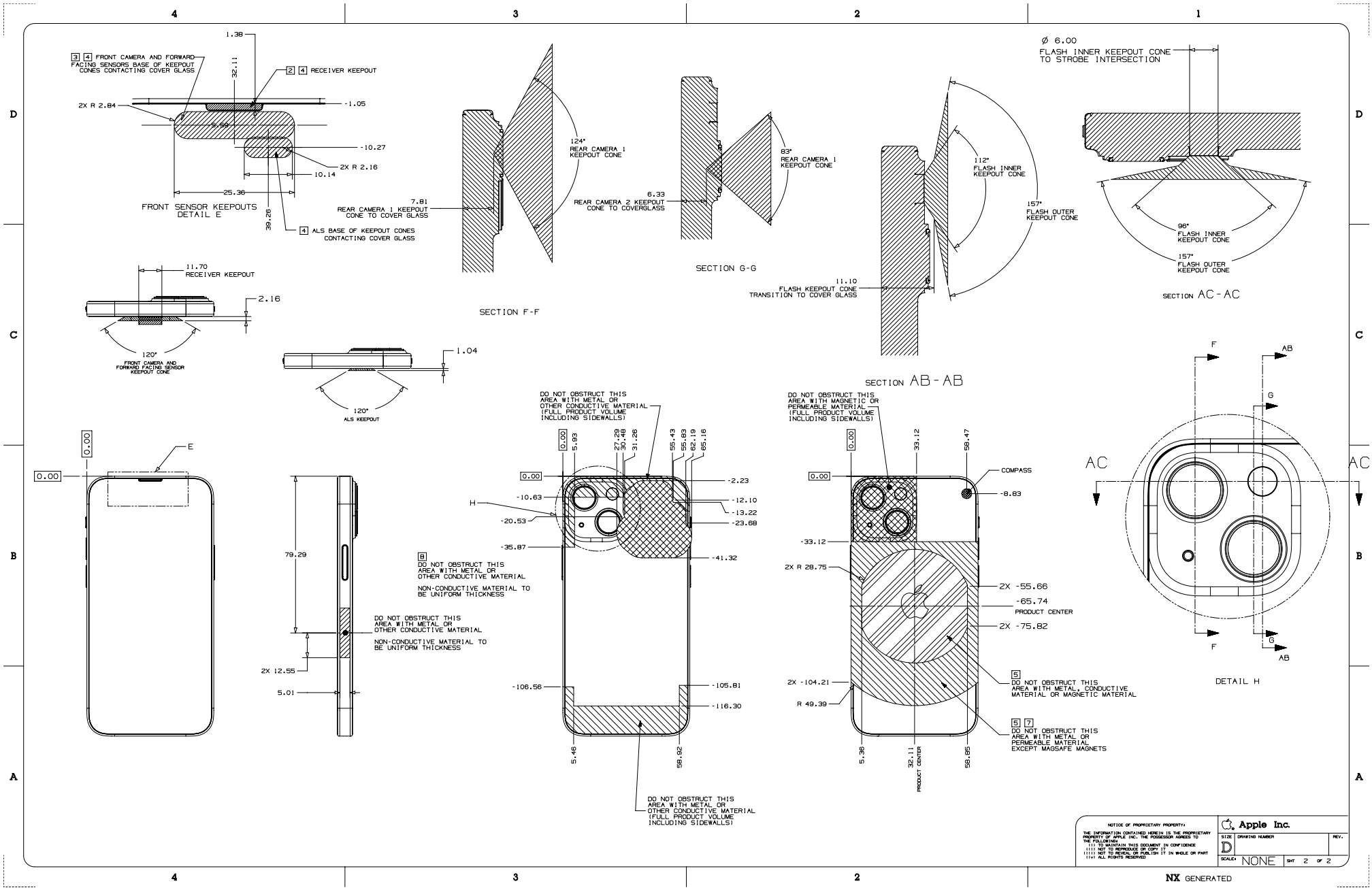

Copyright © 2024 Apple Inc. All Rights Reserved.

58.33 iPhone 12 Pro Max 1 of 2

NOTES: (UNLESS OTHERWISE SPECIFIED)

1. NO METAL CONTACT WITH IPHONE.
2. DO NOT OBSTRUCT PORTS.
3. DO NOT OBSTRUCT THE IMAGING FEATURES: FRONT CAMERA, REAR CAMERAS, REAR FLASH.
4. DO NOT OBSTRUCT FORWARD FACING SENSORS.
5. RELATIVE MAGNETIC PERMEABILITY OF ANY METAL USED ON CASE: 1.05 MAX, PER ASTM A342/A342M-14.
6. DO NOT TOUCH GLASS.
7. NO MAGNETS ON REAR OF PRODUCT EXCEPT MAGSAFE MAGNETS.
8. CASE THICKNESS ON BACKSIDE OF PRODUCT: 2.1 mm MAX TO ENSURE FULL FUNCTIONALITY.

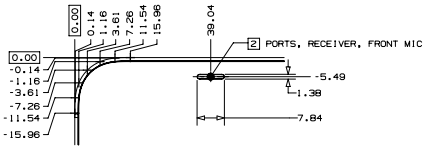

CORNER PROFILE (ALL FOUR CORNERS)
DETAIL A

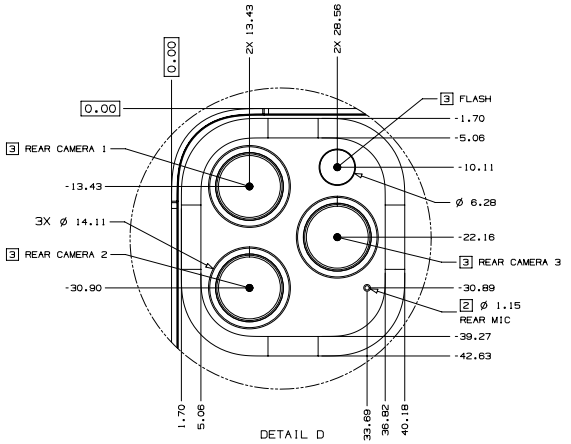

DETAIL D

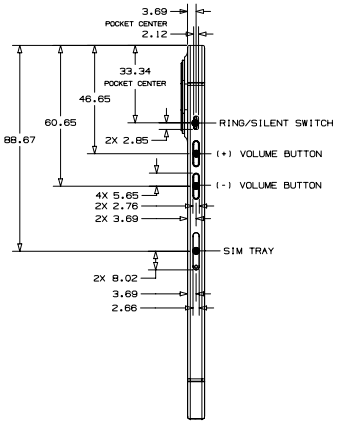

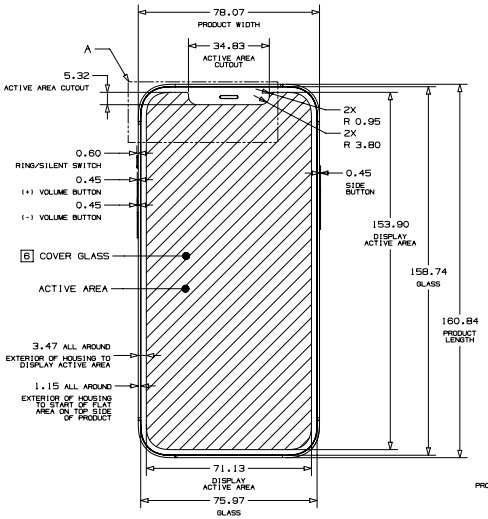

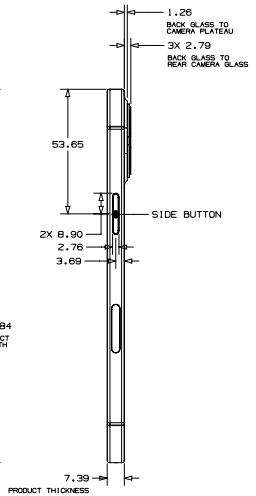

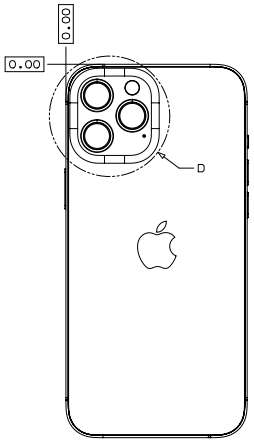

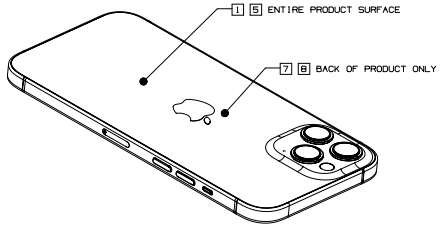

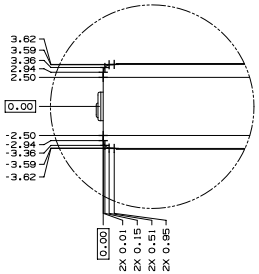

PROFILE (ALL SIDES)
DETAIL B

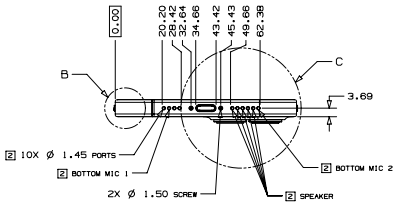

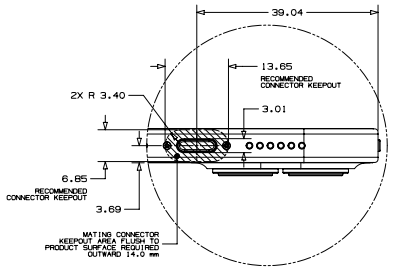

DETAIL C

METRIC		Apple Inc.	
DRAFTER: APPLE INC.	DATE: 10/13/20	NOTICE OF PROPRIETARY PROPERTY: THE INFORMATION CONTAINED HEREIN IS THE PROPRIETARY PROPERTY OF APPLE INC. THE POSSESSOR AGREES TO THE FOLLOWING: (i) TO MAINTAIN THIS DOCUMENT IN CONFIDENCE (ii) NOT TO REPRODUCE OR COPY IT (iii) NOT TO REVEAL OR PUBLISH IT IN WHOLE OR PART (iv) ALL RIGHTS RESERVED	
DESIGNER: APPLE INC.	DATE: 10/13/20	TITLE: iPhone 12 Pro Max	
		DRAWING NUMBER	REV.
THIRD ANGLE PROJECTION	SIZE: D	SCALE: NONE	SHT 1 OF 2

NX GENERATED

58.34 iPhone 12 Pro Max 2 of 2

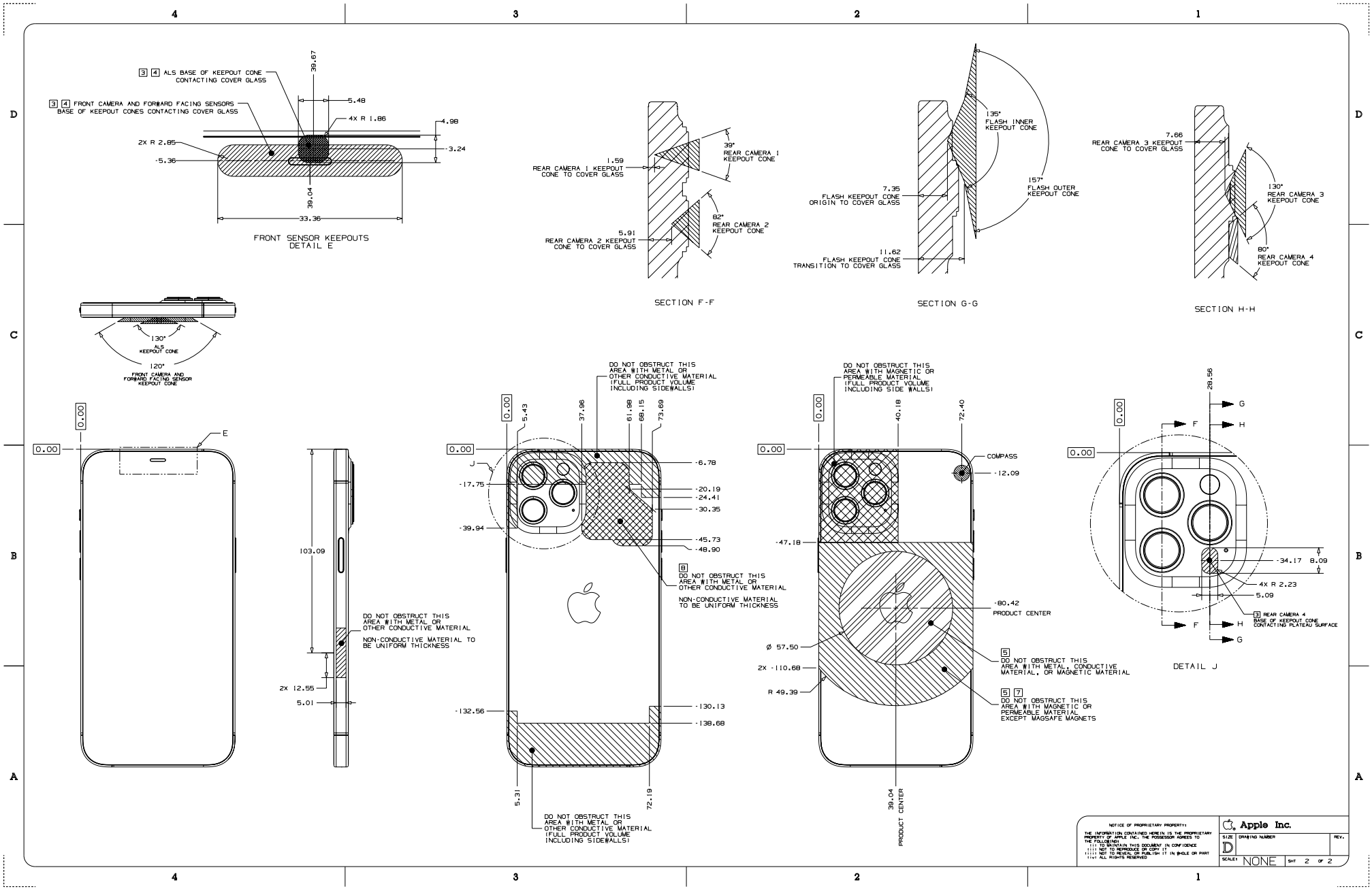

Copyright © 2024 Apple Inc. All Rights Reserved.

58.35 iPhone 12 Pro 1 of 2

NOTES: (UNLESS OTHERWISE SPECIFIED)

1. NO METAL CONTACT WITH IPHONE.
2. DO NOT OBSTRUCT PORTS.
3. DO NOT OBSTRUCT THE IMAGING FEATURES: FRONT CAMERA, REAR CAMERAS, REAR FLASH.
4. DO NOT OBSTRUCT FORWARD FACING SENSORS.
5. RELATIVE MAGNETIC PERMEABILITY OF ANY METAL USED ON CASE: 1.05 MAX, PER ASTM A342/A342M-14.
6. DO NOT TOUCH GLASS.
7. NO MAGNETS ON REAR OF PRODUCT EXCEPT MAGSAFE MAGNETS.
8. CASE THICKNESS ON BACKSIDE OF PRODUCT: 2.1 mm MAX TO ENSURE FULL FUNCTIONALITY.

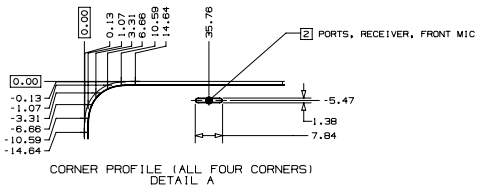

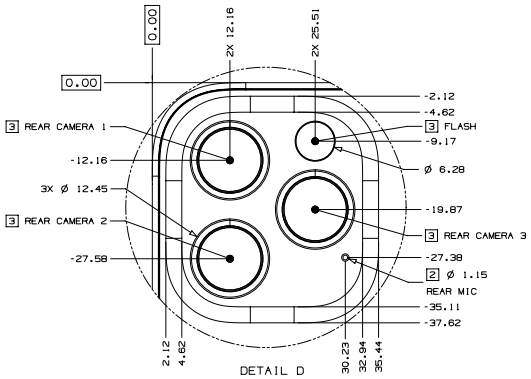

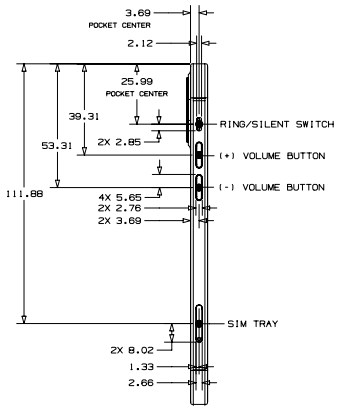

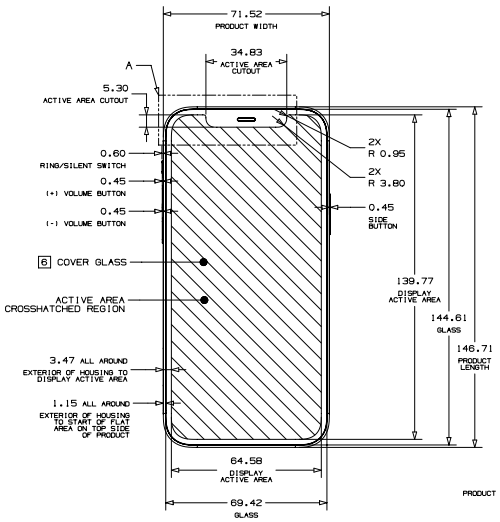

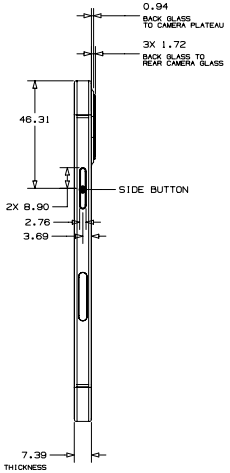

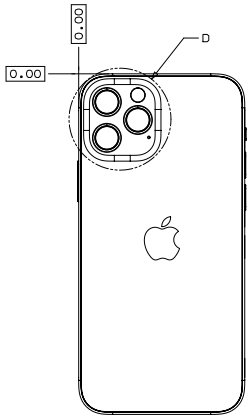

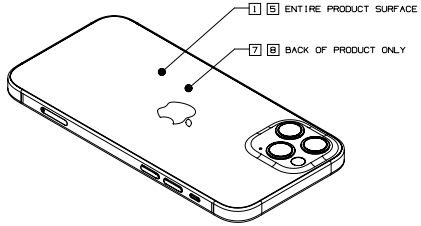

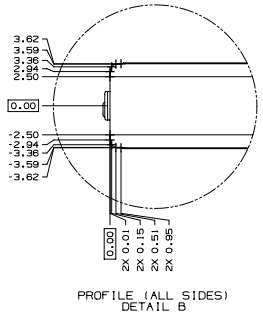

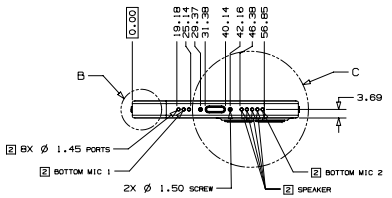

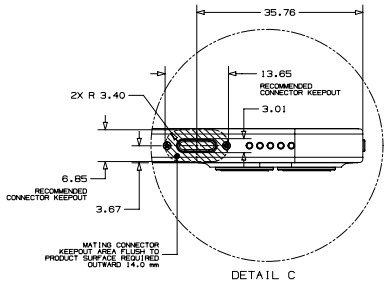

METRIC	Apple Inc.
DRAFTER: APPLE INC. — DATE: 10/13/20	NOTICE OF PROPRIETARY PROPERTY: THE INFORMATION CONTAINED HEREIN IS THE PROPRIETARY PROPERTY OF APPLE INC. THE POSSESSOR AGREES TO THE FOLLOWING: (i) TO MAINTAIN THIS DOCUMENT IN CONFIDENCE (ii) NOT TO REPRODUCE OR COPY IT (iii) NOT TO REVEAL OR PUBLISH IT IN WHOLE OR PART (iv) ALL RIGHTS RESERVED
DESIGNER: APPLE INC. — DATE: 10/13/20	TITLE: iPhone 12 Pro
	DRAWING NUMBER — REV.
THIRD ANGLE PROJECTION — SIZE: D	SCALE: NONE — SHT 1 OF 2

NX GENERATED

58.36 iPhone 12 Pro 2 of 2

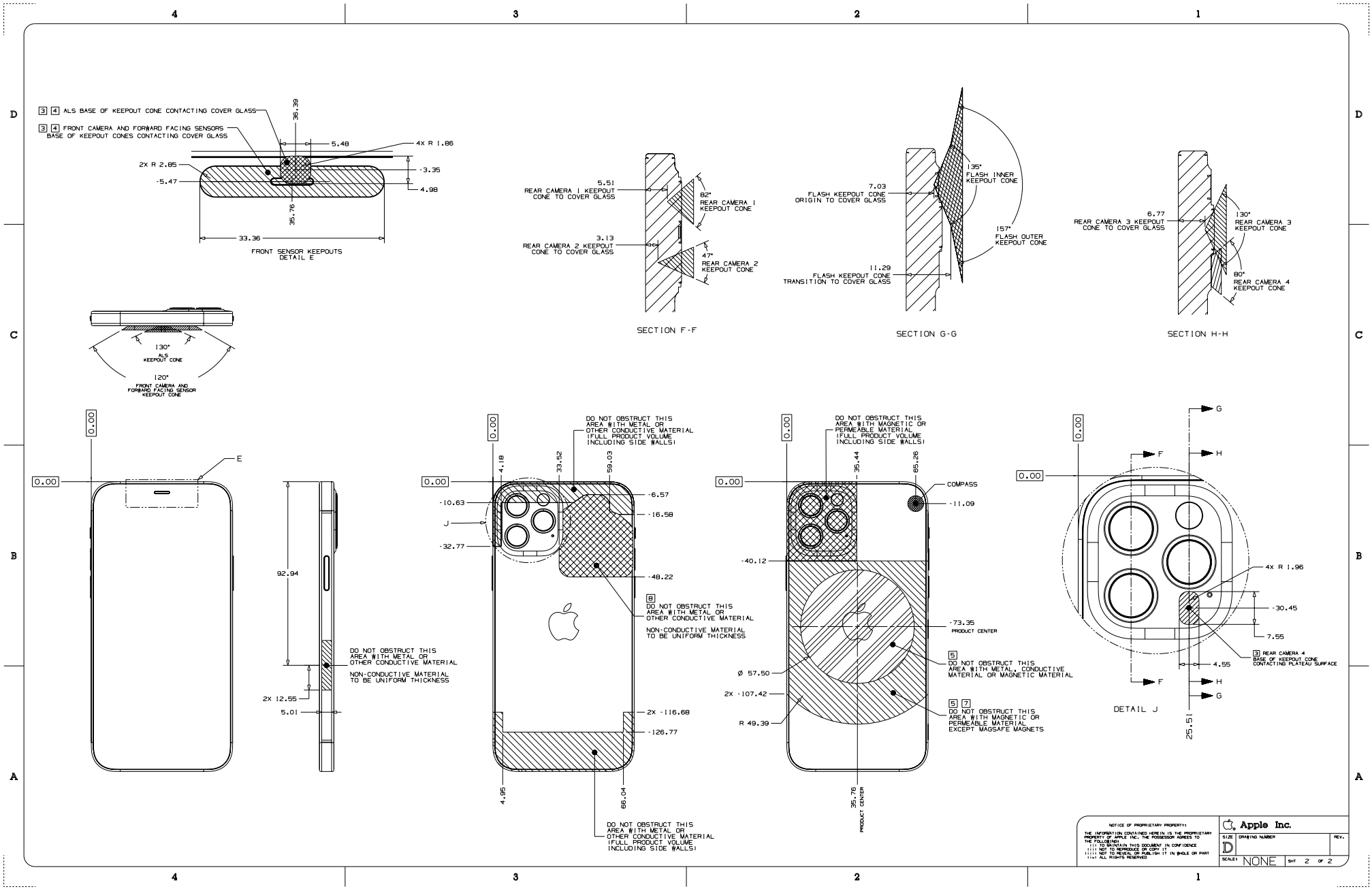

58.37 iPhone 12 1 of 2

NOTES: (UNLESS OTHERWISE SPECIFIED)

1. NO METAL CONTACT WITH IPHONE.
2. DO NOT OBSTRUCT PORTS.
3. DO NOT OBSTRUCT THE IMAGING FEATURES: FRONT CAMERA, REAR CAMERAS, REAR FLASH.
4. DO NOT OBSTRUCT FORWARD FACING SENSORS.
5. RELATIVE MAGNETIC PERMEABILITY OF ANY METAL USED ON CASE: 1.05 MAX, PER ASTM A342/A342M-14.
6. DO NOT TOUCH GLASS.
7. NO MAGNETS ON REAR OF PRODUCT EXCEPT MAGSAFE MAGNETS.
8. CASE THICKNESS ON BACKSIDE OF PRODUCT: 2.1 mm MAX TO ENSURE FULL FUNCTIONALITY.

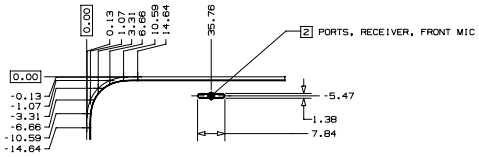

CORNER PROFILE (ALL FOUR CORNERS)
DETAIL A

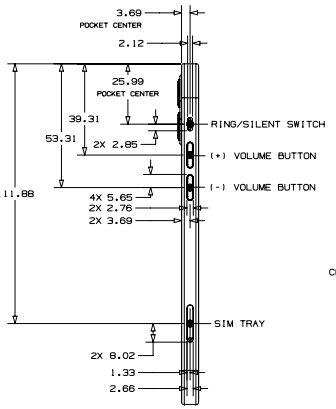

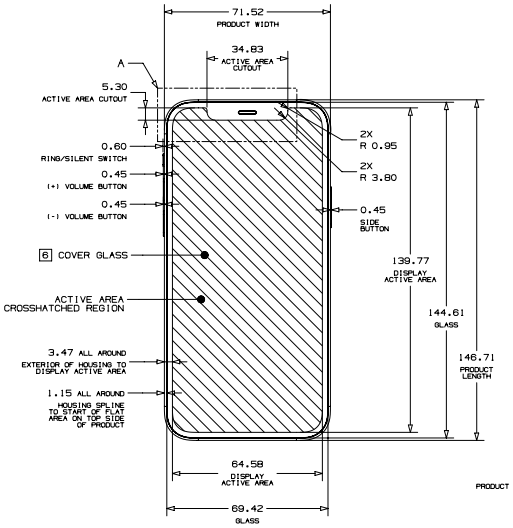

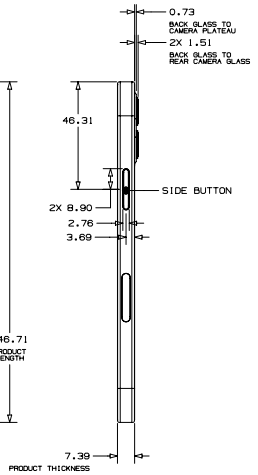

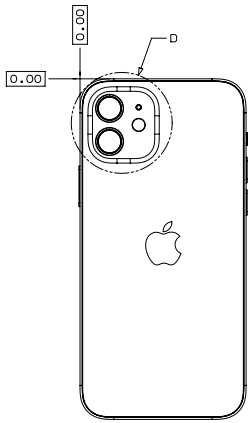

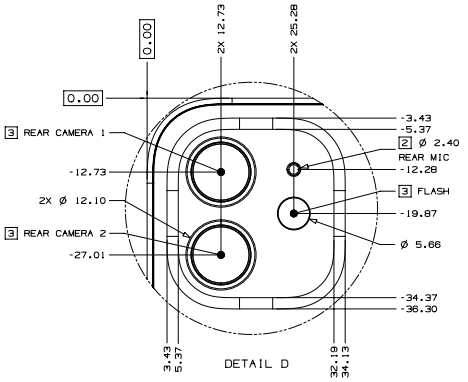

DETAIL D

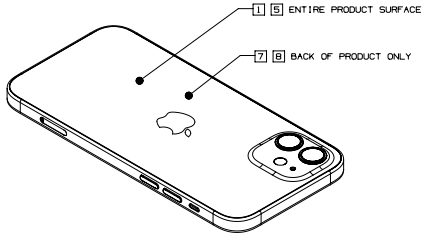

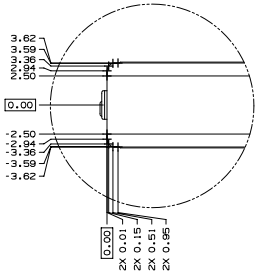

PROFILE (ALL SIDES)
DETAIL B

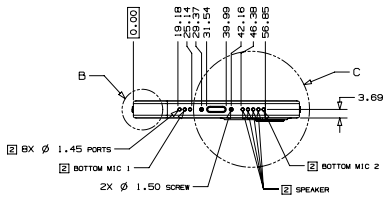

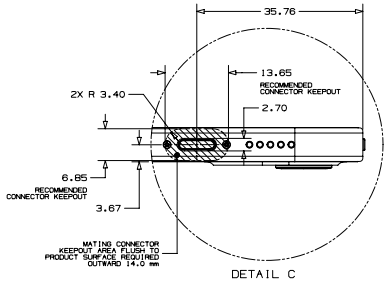

DETAIL C

METRIC		Apple Inc.	
DRAFTER: APPLE INC.	DATE: 10/13/20	NOTICE OF PROPRIETARY PROPERTY: THE INFORMATION CONTAINED HEREIN IS THE PROPRIETARY PROPERTY OF APPLE INC. THE POSSESSOR AGREES TO THE FOLLOWING: (i) TO MAINTAIN THIS DOCUMENT IN CONFIDENCE (ii) NOT TO COPY OR REPRODUCE IT (iii) NOT TO REVEAL OR PUBLISH IT IN WHOLE OR PART (iv) ALL RIGHTS RESERVED	
DESIGNER: APPLE INC.	DATE: 10/13/20	TITLE: iPhone 12	
		DRAWING NUMBER	REV.
THIRD ANGLE PROJECTION	SIZE: D	SCALE: NONE	SHT 1 OF 2

NX GENERATED

58.38 iPhone 12 2 of 2

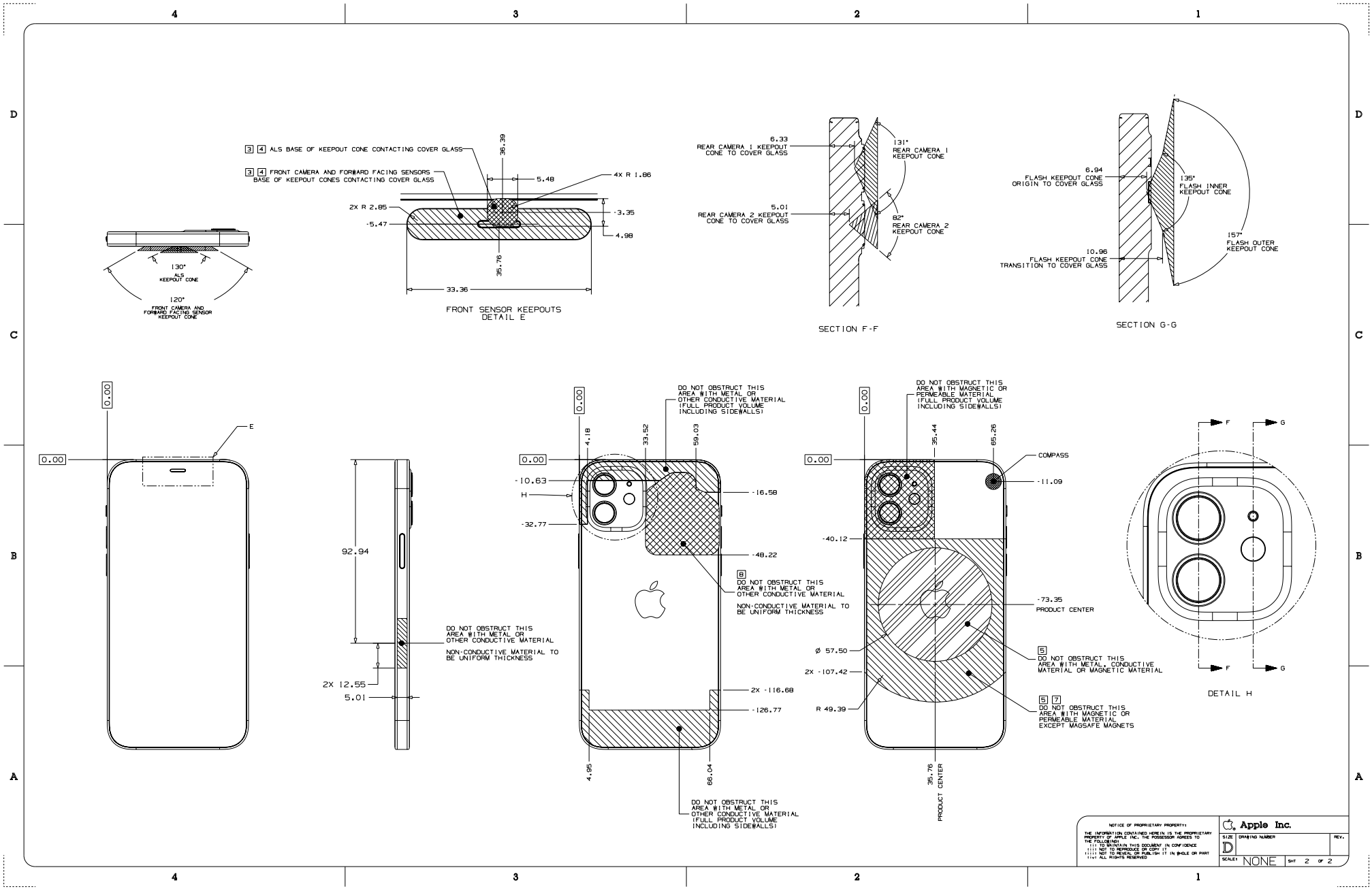

58.39 iPhone 12 mini 1 of 2

NOTES: (UNLESS OTHERWISE SPECIFIED)

1. NO METAL CONTACT WITH IPHONE.
2. DO NOT OBSTRUCT PORTS.
3. DO NOT OBSTRUCT THE IMAGING FEATURES: FRONT CAMERA, REAR CAMERAS, REAR FLASH.
4. DO NOT OBSTRUCT FORWARD FACING SENSORS.
5. RELATIVE MAGNETIC PERMEABILITY OF ANY METAL USED ON CASE: 1.05 MAX, PER ASTM A342/A342M-14.
6. DO NOT TOUCH GLASS.
7. NO MAGNETS ON REAR OF PRODUCT EXCEPT MAGSAFE MAGNETS.
8. CASE THICKNESS ON BACKSIDE OF PRODUCT: 2.1 mm MAX TO ENSURE FULL FUNCTIONALITY.

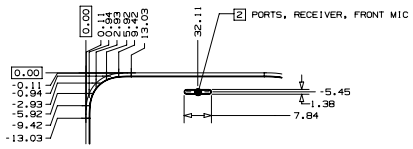

CORNER PROFILE (ALL FOUR CORNERS)
DETAIL A

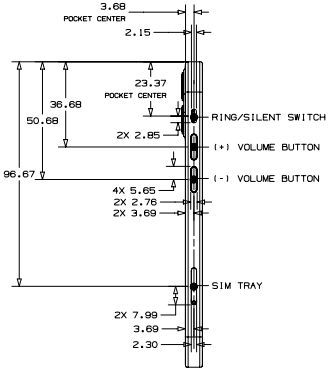

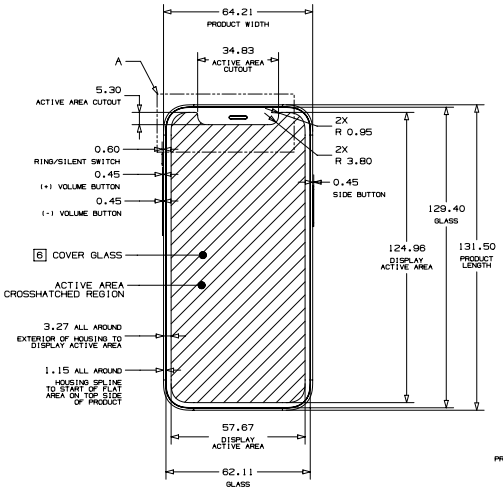

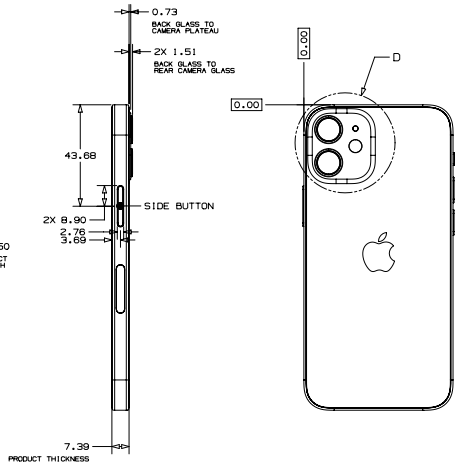

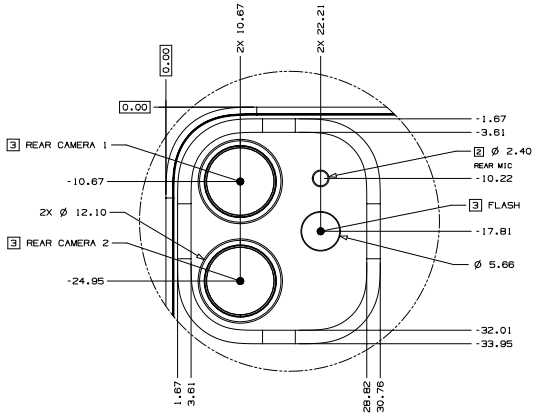

DETAIL D

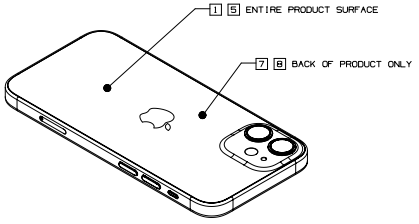

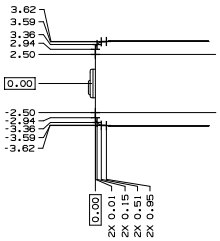

PROFILE (ALL SIDES)
DETAIL B

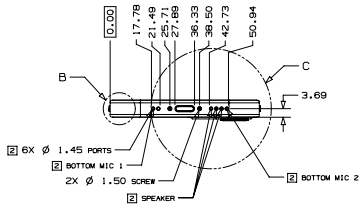

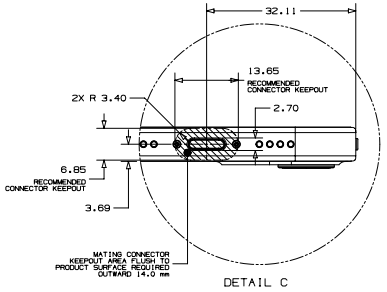

DETAIL C

METRIC		Apple Inc.	
DRAFTER: APPLE INC.	DATE: 10/13/20	NOTICE OF PROPRIETARY PROPERTY: THE INFORMATION CONTAINED HEREIN IS THE PROPRIETARY PROPERTY OF APPLE INC. THE POSSESSOR AGREES TO THE FOLLOWING: (i) TO MAINTAIN THIS DOCUMENT IN CONFIDENCE (ii) NOT TO REPRODUCE OR COPY IT (iii) NOT TO REVEAL OR PUBLISH IT IN WHOLE OR PART (iv) ALL RIGHTS RESERVED	
DESIGNER: APPLE INC.	DATE: 10/13/20		
		TITLE: iPhone 12 mini	
		DRAWING NUMBER	REV.
THIRD ANGLE PROJECTION	SIZE: D	SCALE: NONE	SHT 1 OF 2

NX GENERATED

58.40 iPhone 12 mini 2 of 2

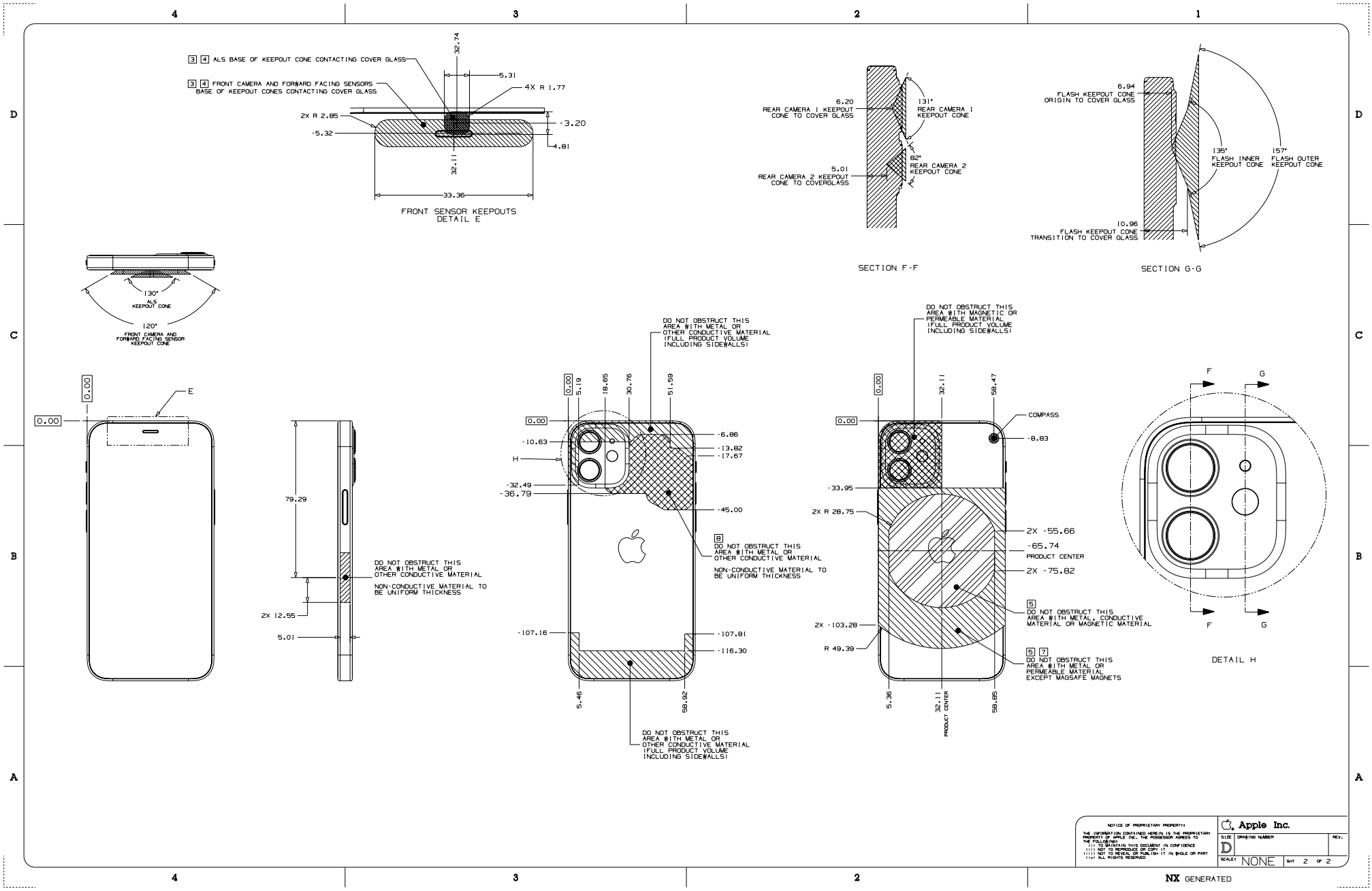

Copyright © 2024 Apple Inc. All Rights Reserved.

58.41 iPhone SE (3rd generation) and iPhone SE (2nd generation)

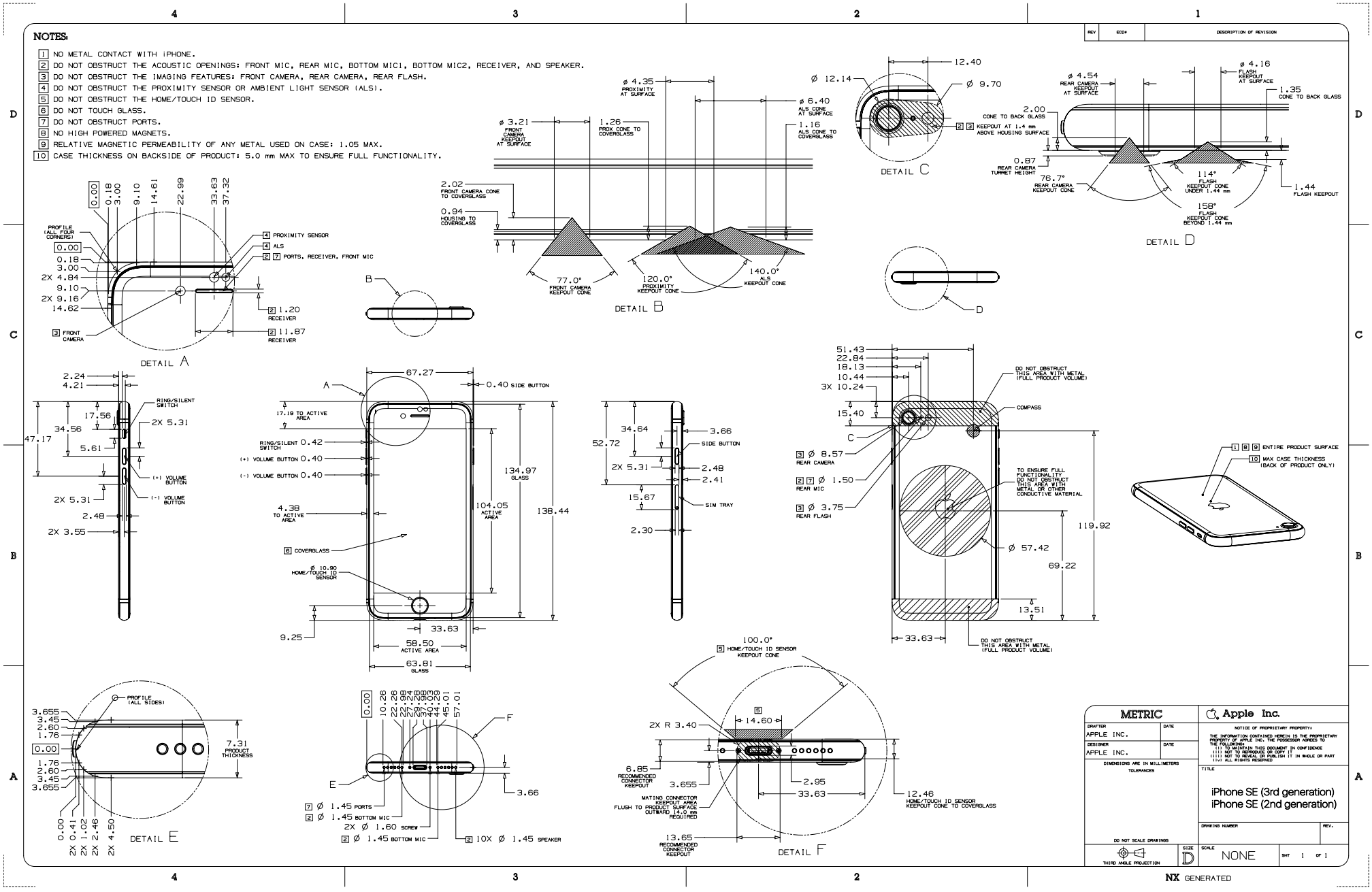

Copyright © 2024 Apple Inc. All Rights Reserved.

58.42 iPhone 11 Pro Max

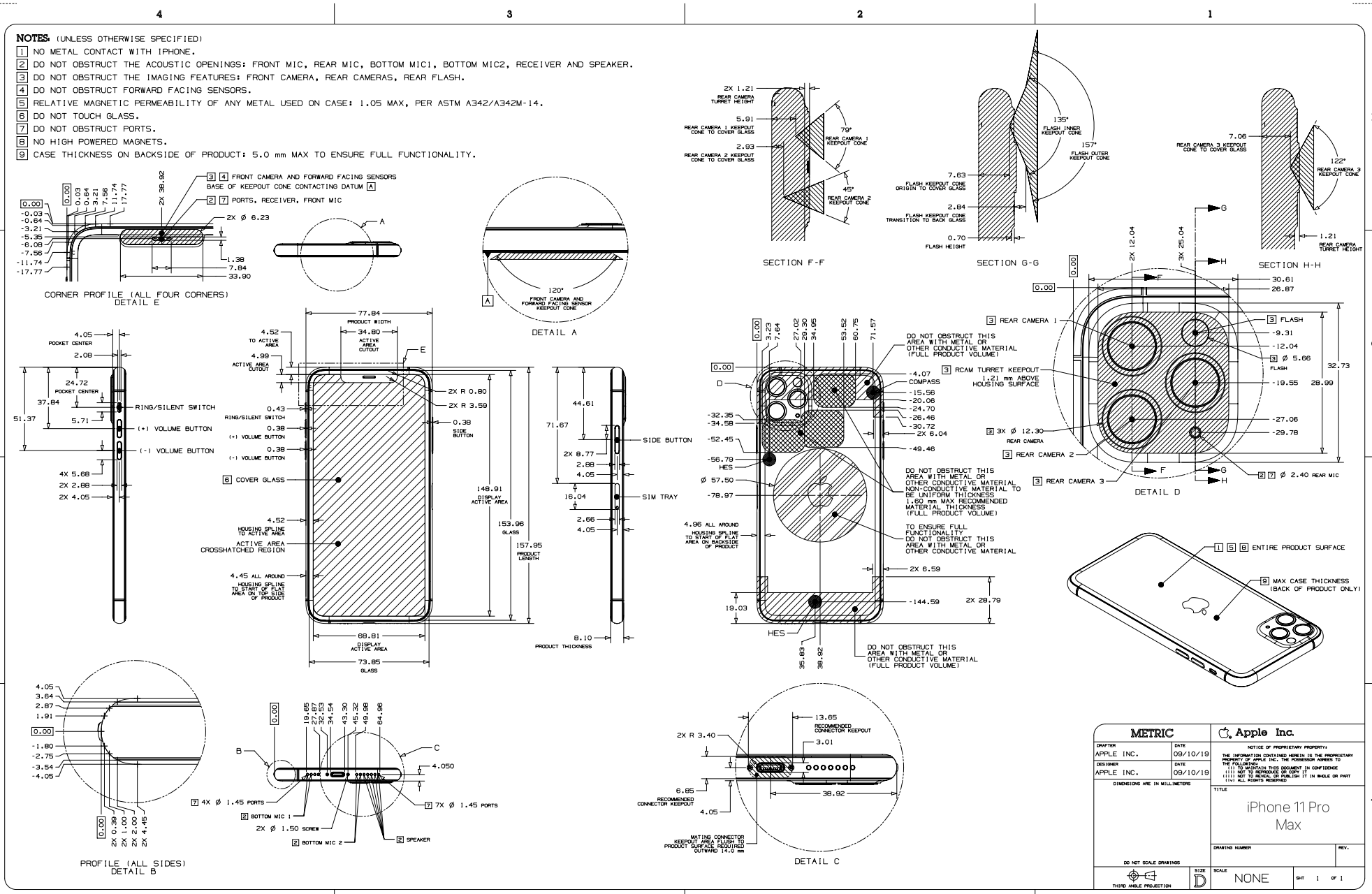

Copyright © 2024 Apple Inc. All Rights Reserved.

58.43 iPhone 11 Pro

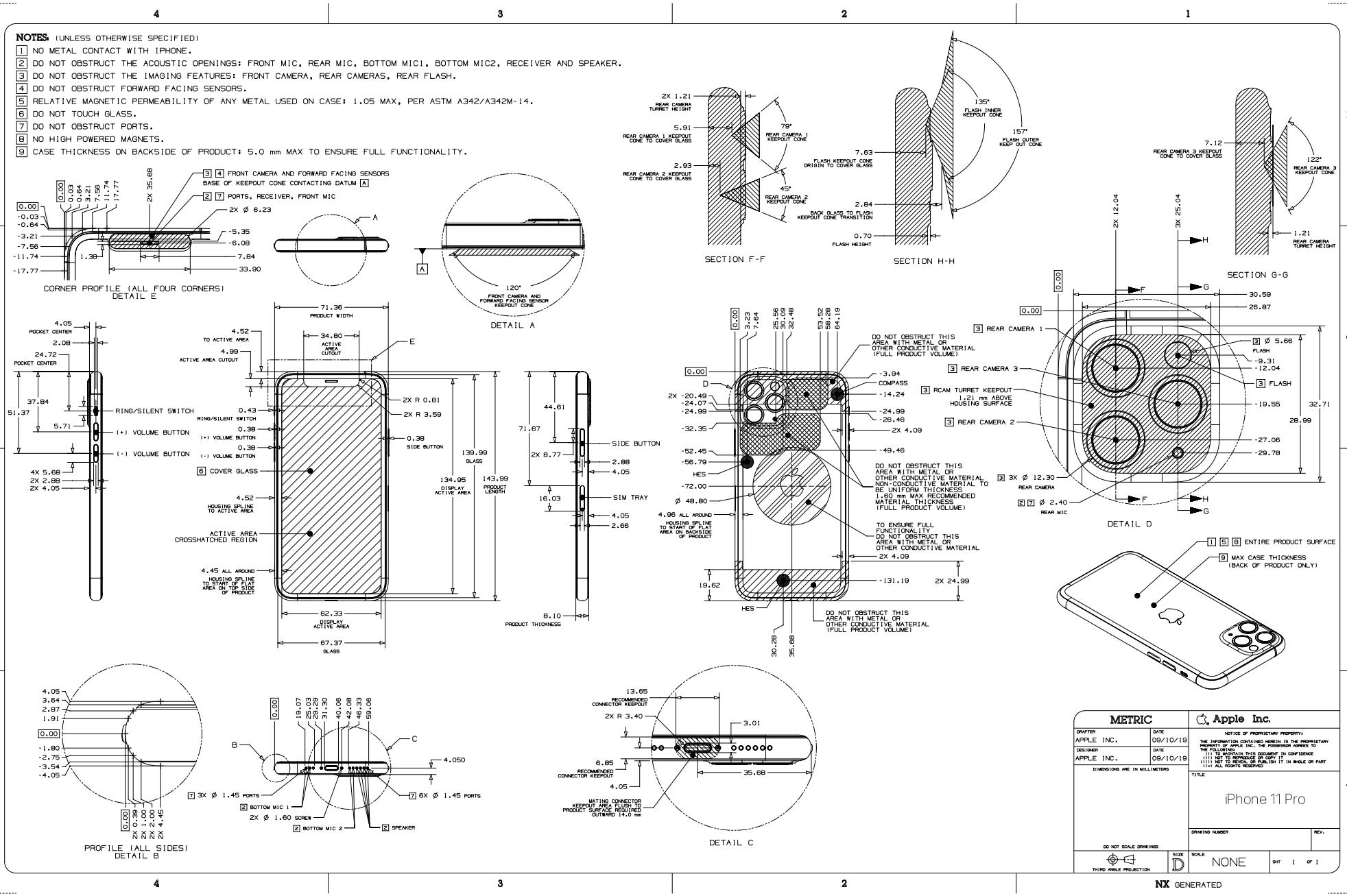

Copyright © 2024 Apple Inc. All Rights Reserved.

58.44 iPhone 11

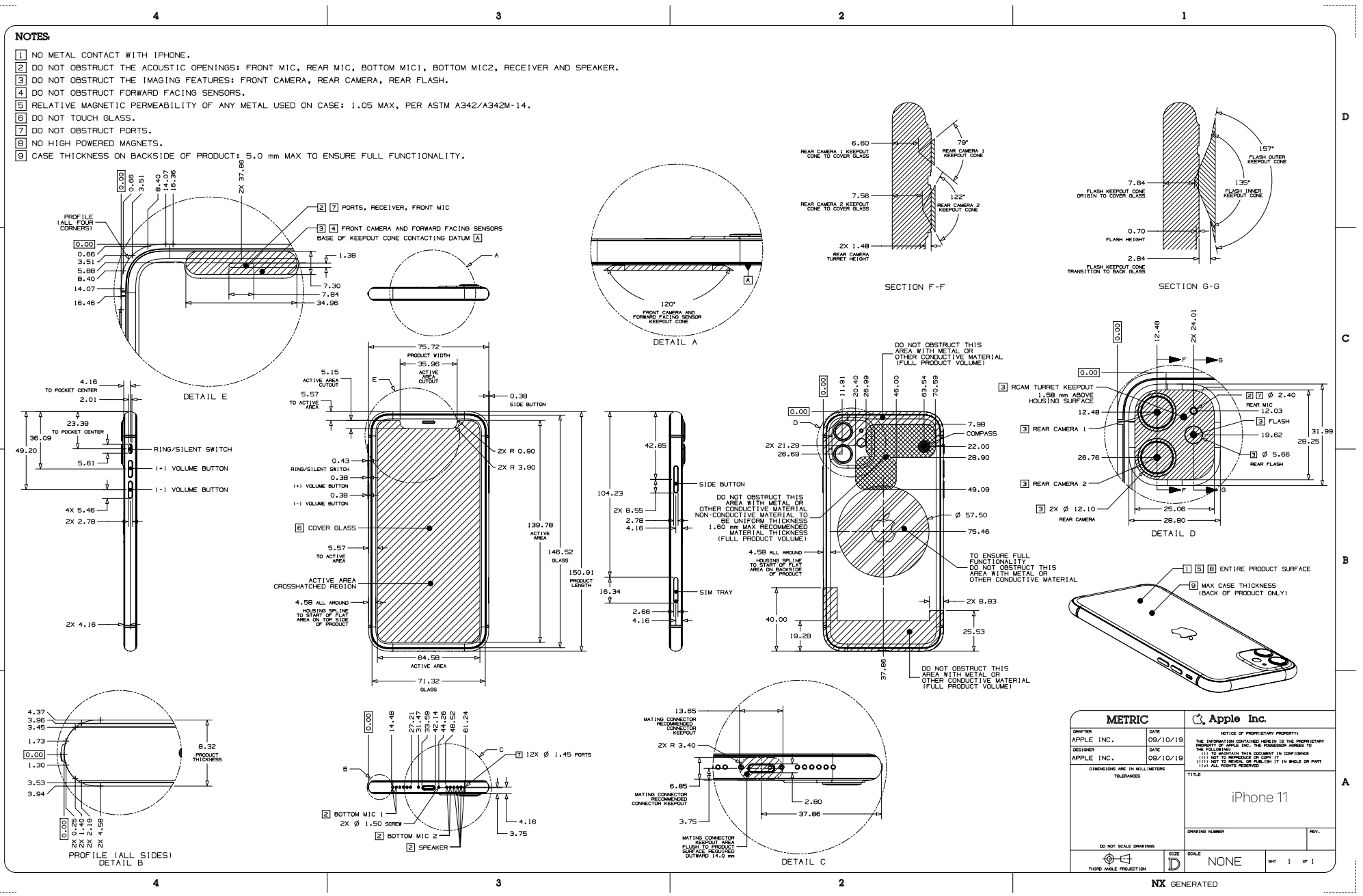

58.45 iPhone XS Max

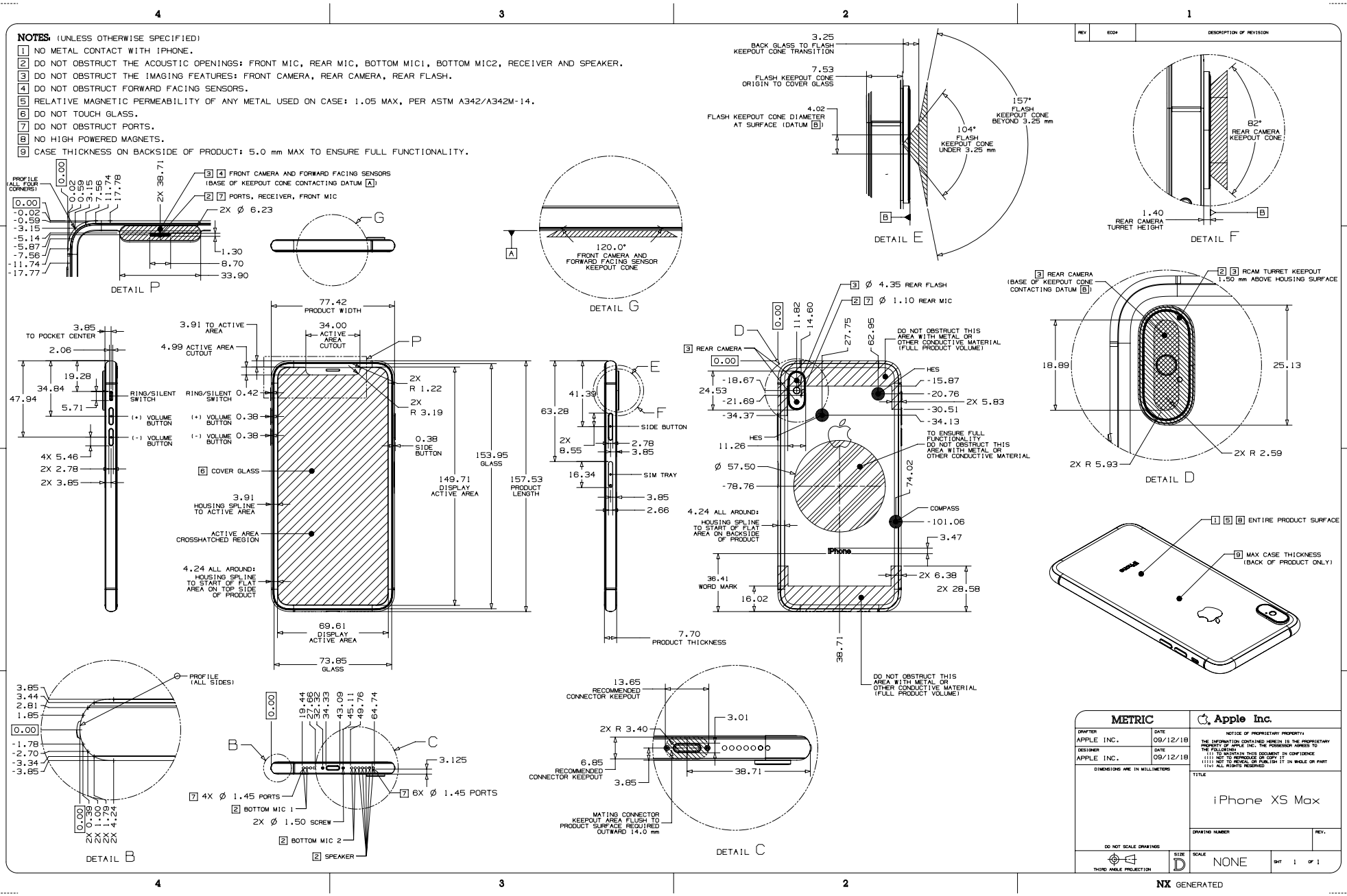

58.46 iPhone XS

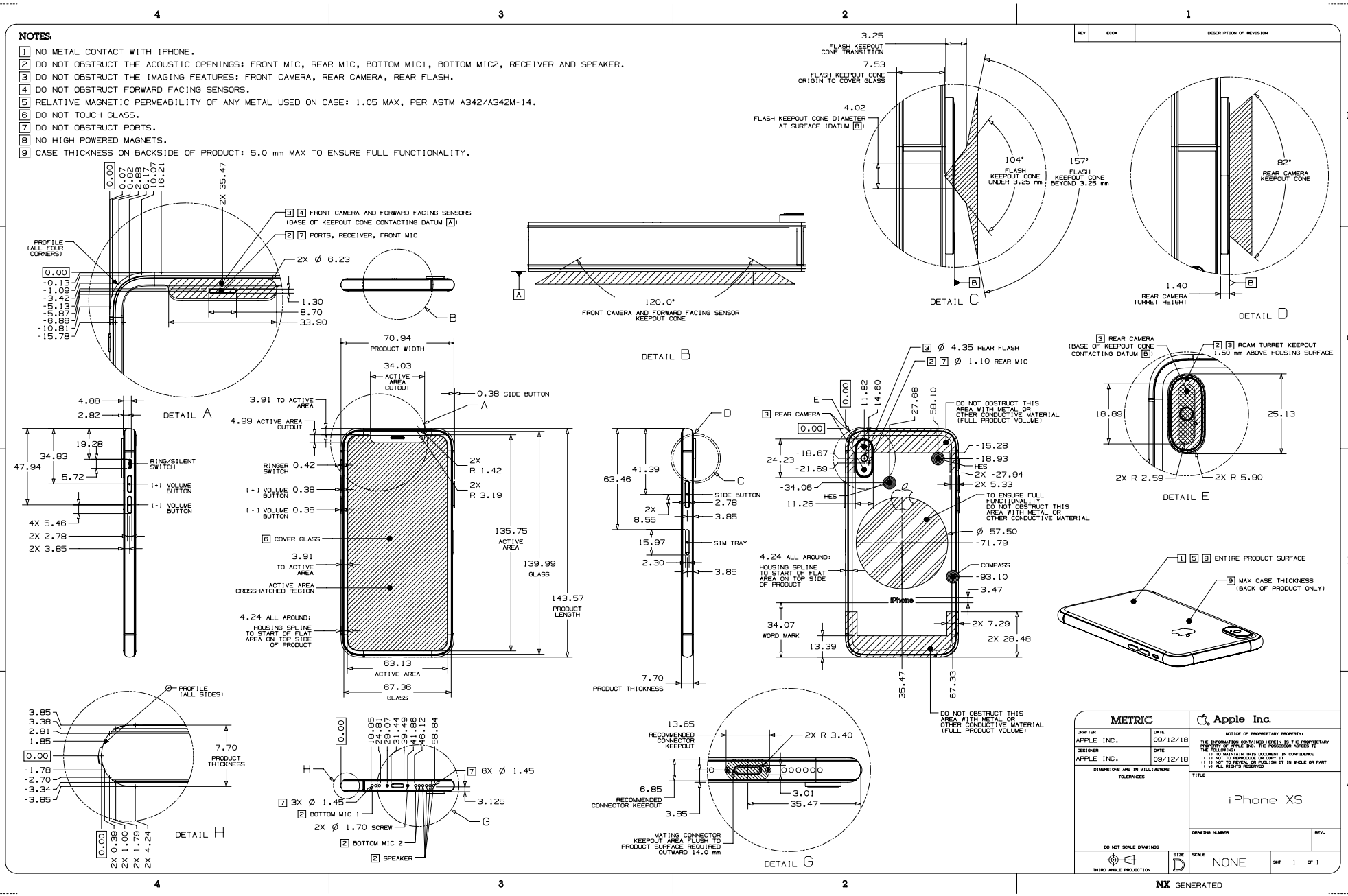

Copyright © 2024 Apple Inc. All Rights Reserved.

58.47 iPhone XR

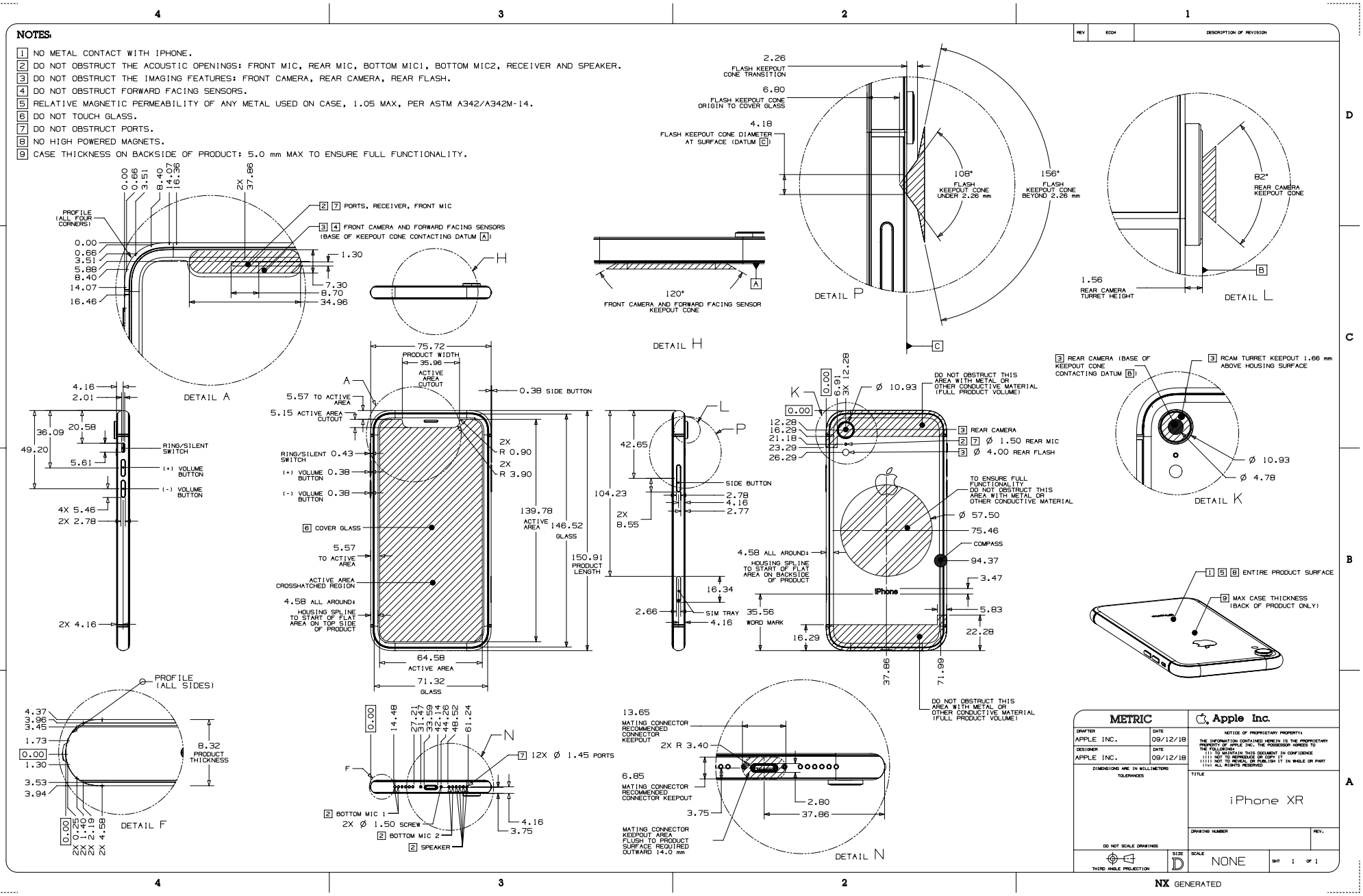

58.48 iPhone X

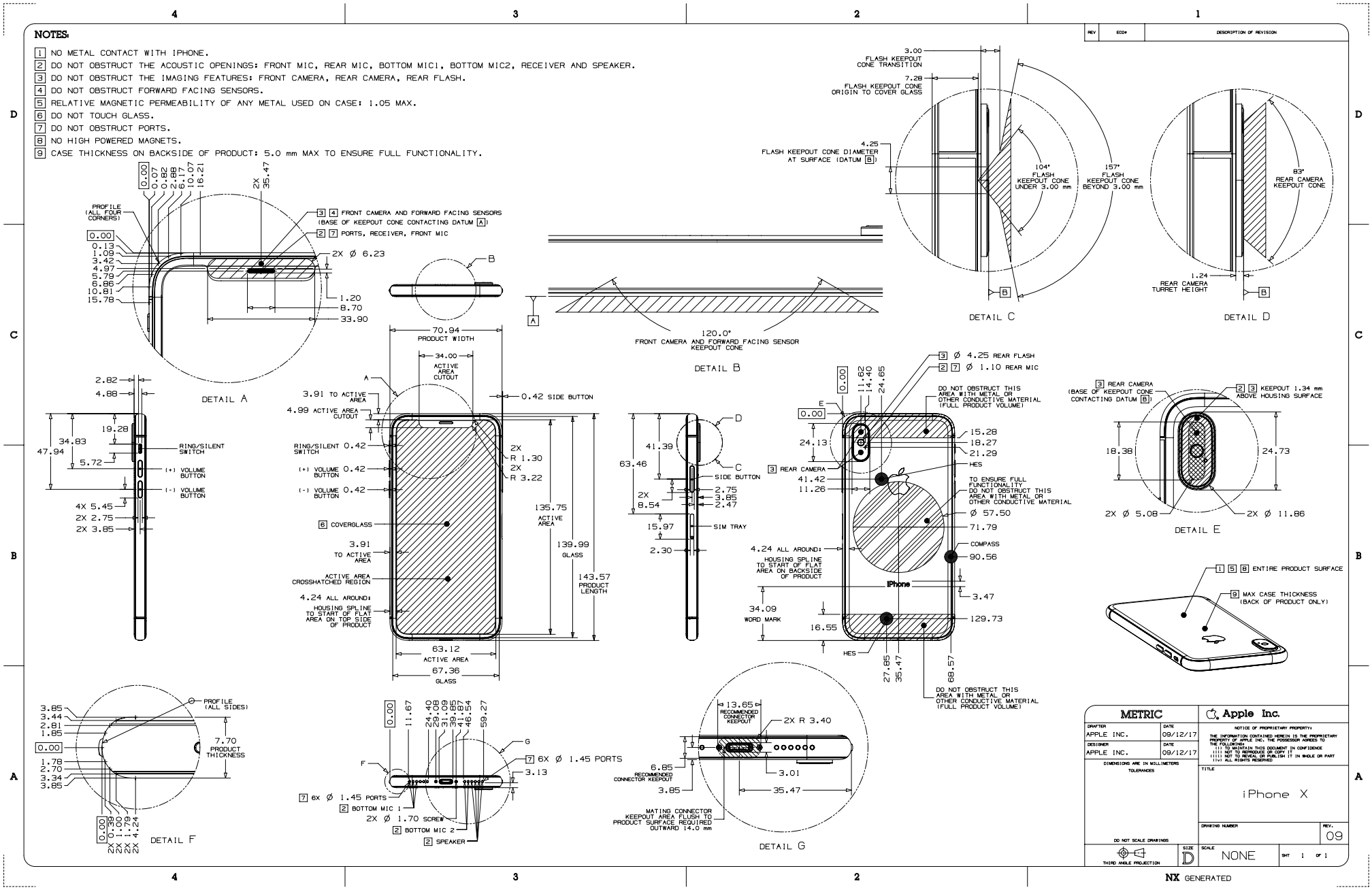

58.49 iPhone 8 Plus

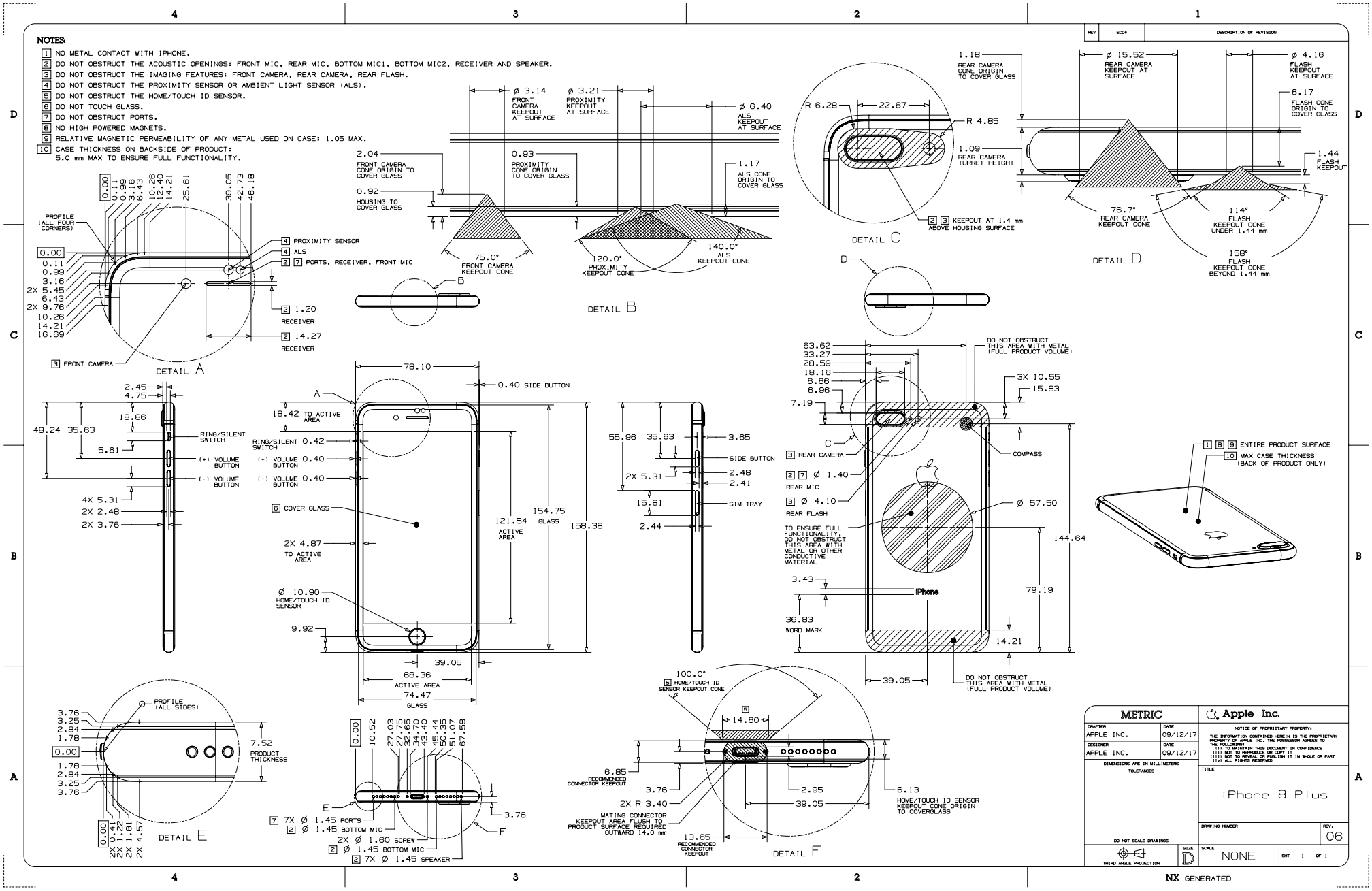

58.50 iPhone 8

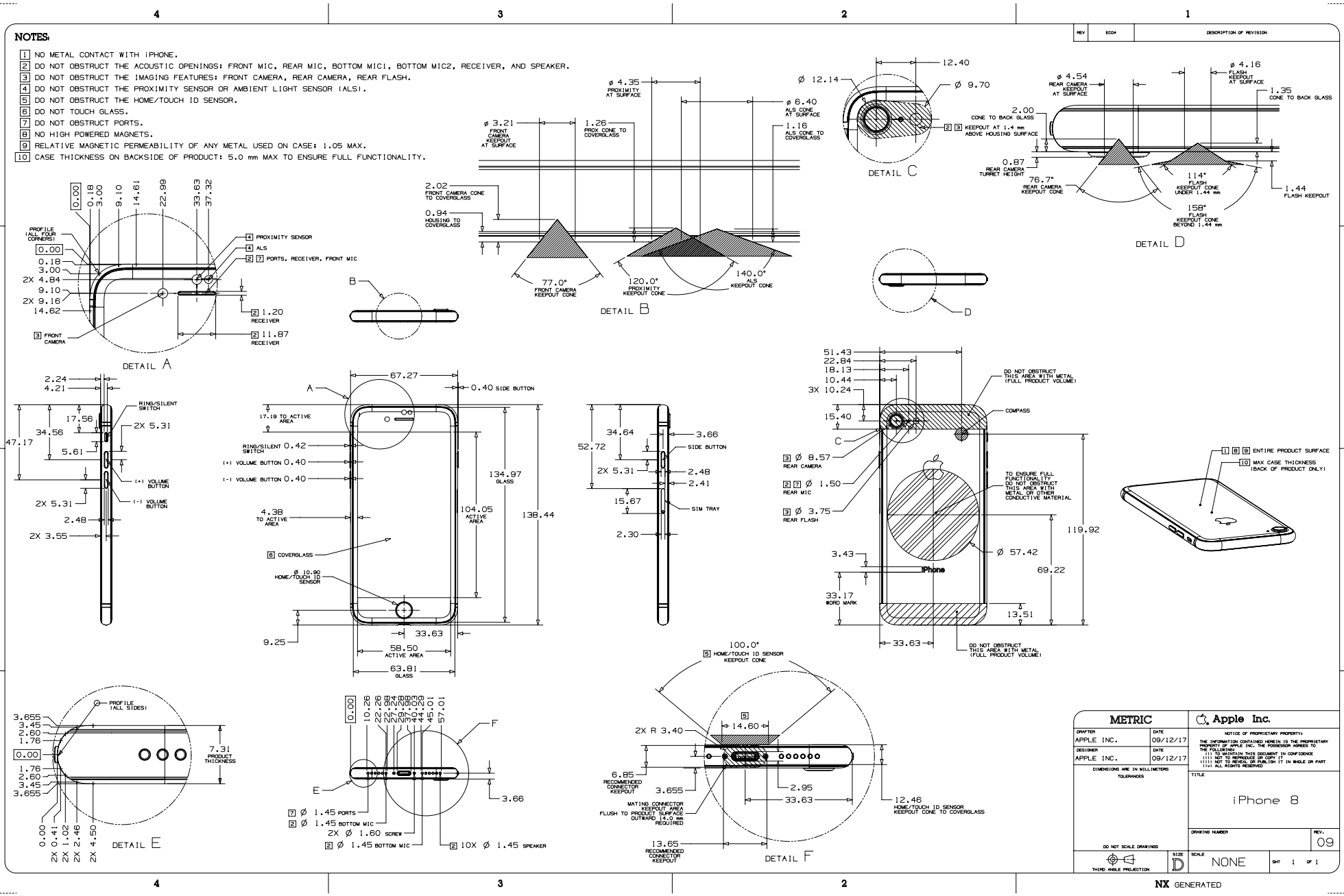

Copyright © 2024 Apple Inc. All Rights Reserved.

58.51 iPhone 7 Plus

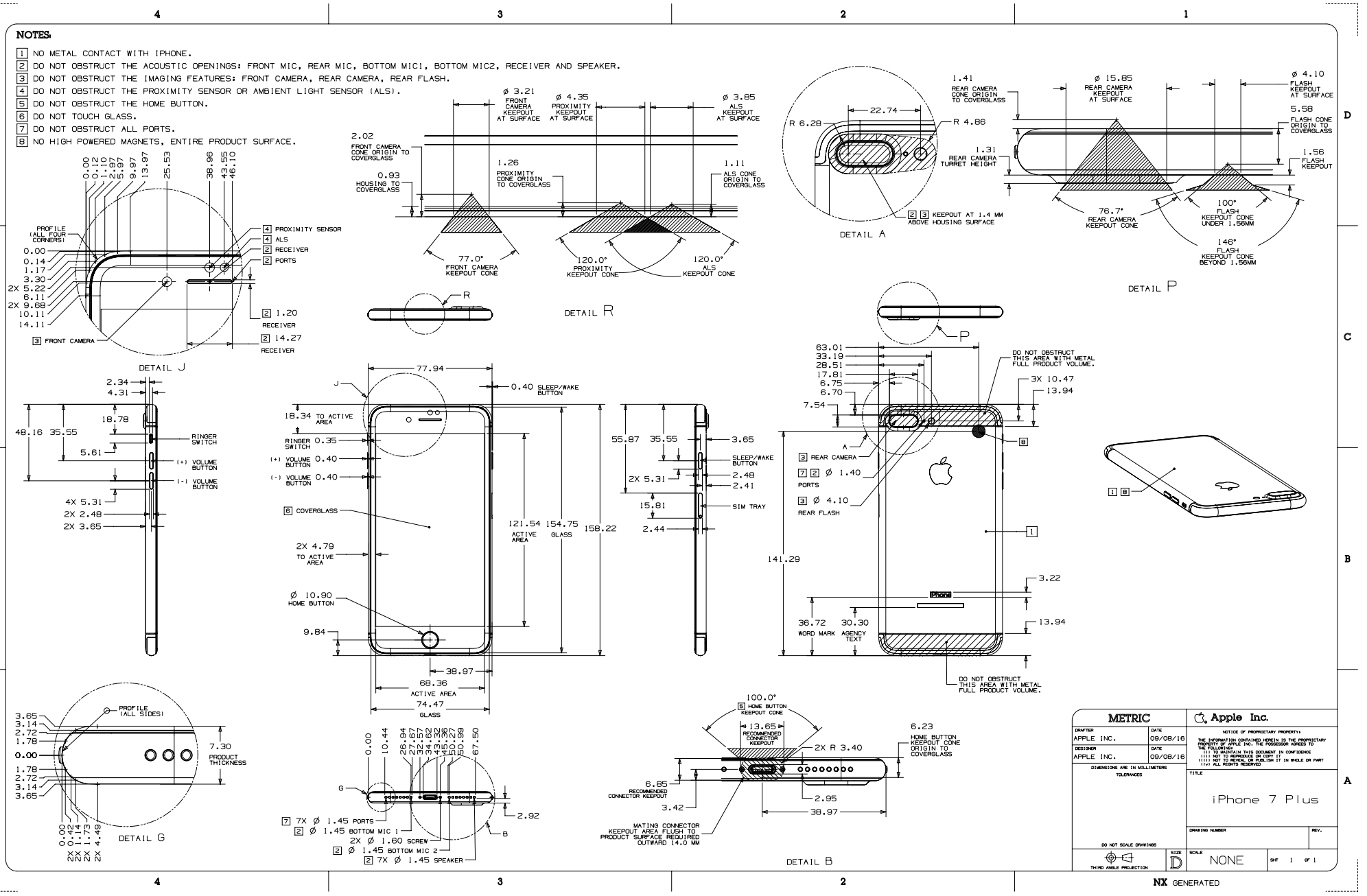

Copyright © 2024 Apple Inc. All Rights Reserved.

58.52 iPhone 7

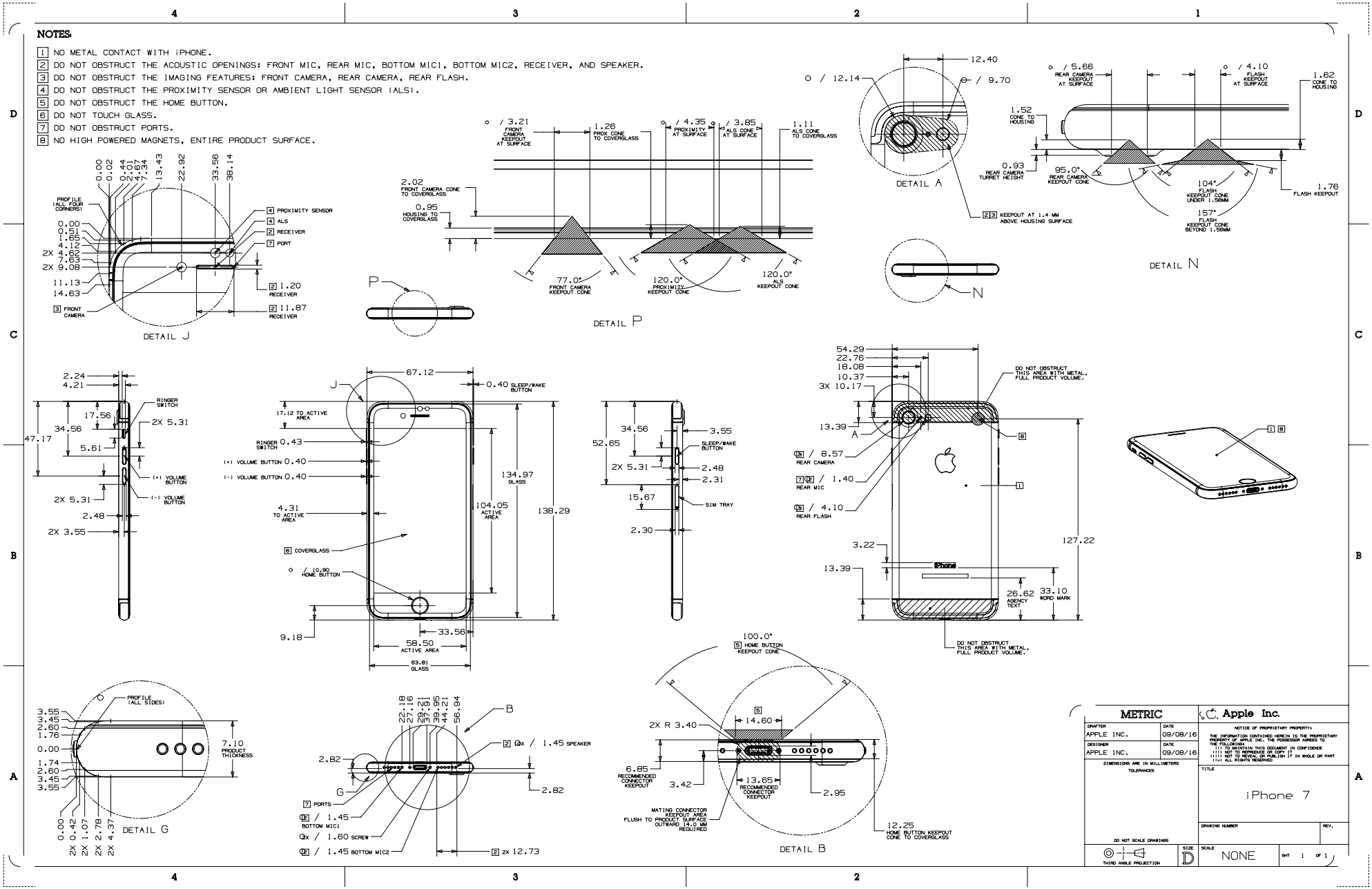

Copyright © 2024 Apple Inc. All Rights Reserved.

58.53 iPhone 6s Plus

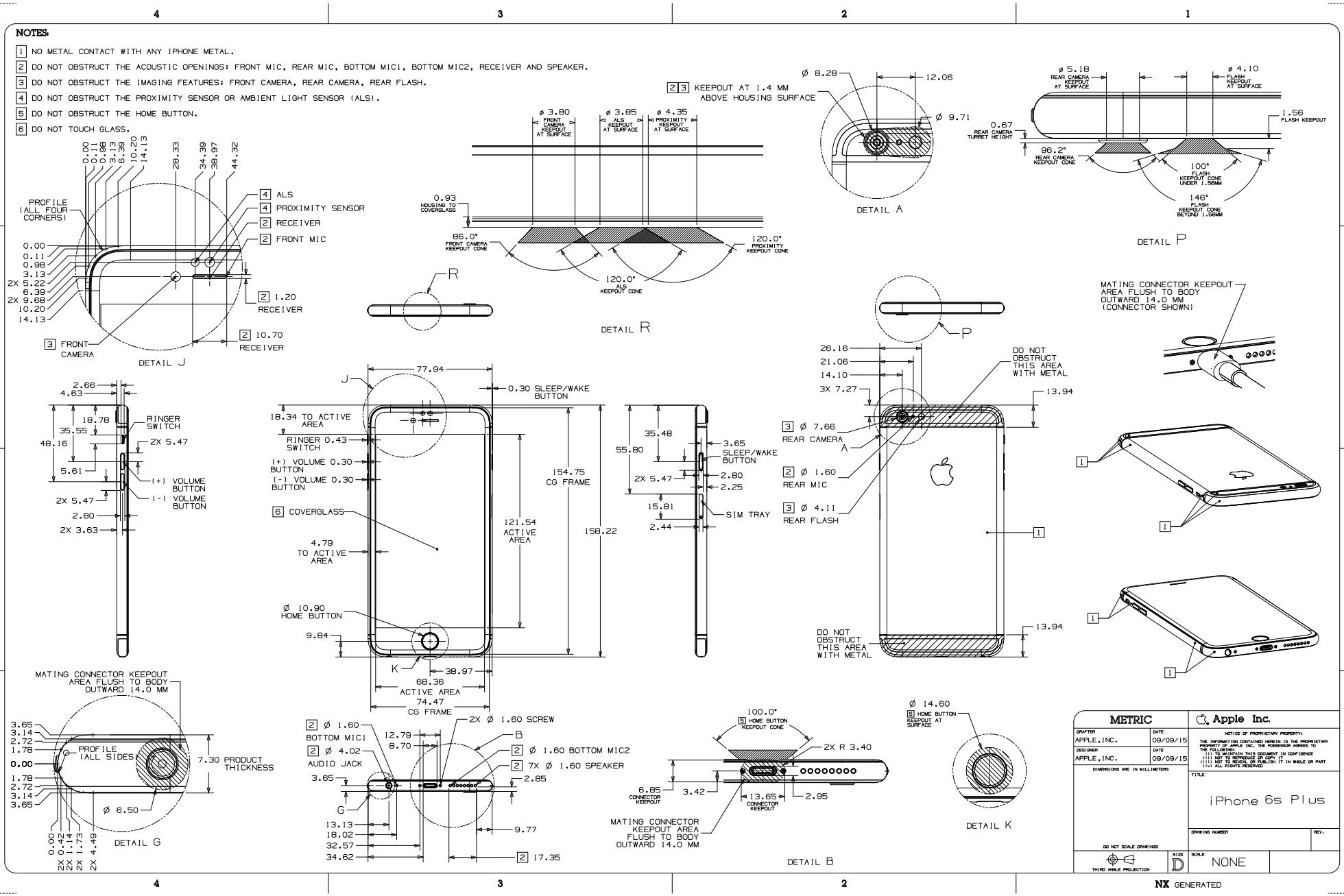

Copyright © 2024 Apple Inc. All Rights Reserved.

58.54 iPhone 6s

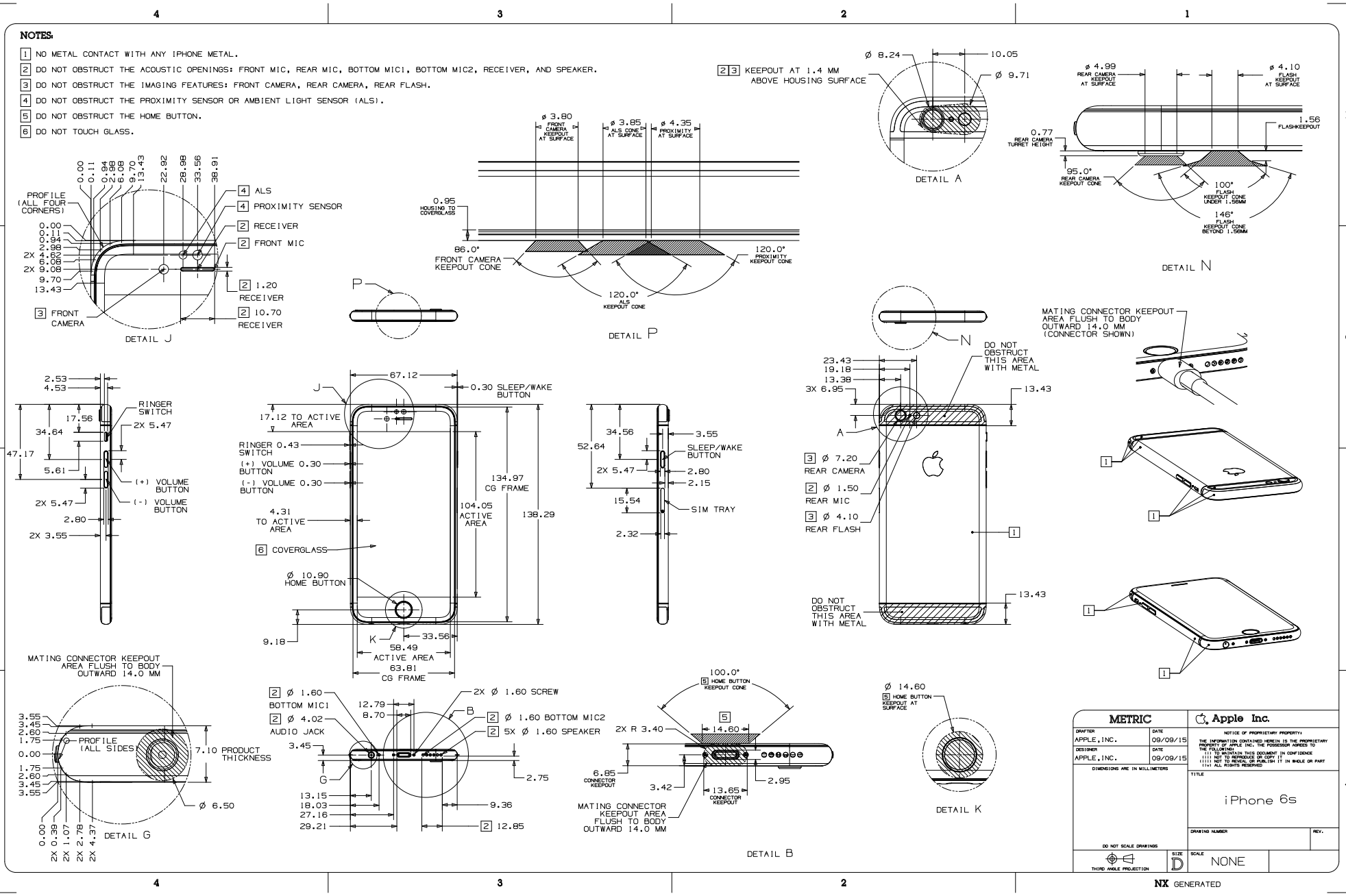

58.55 iPhone 6 Plus

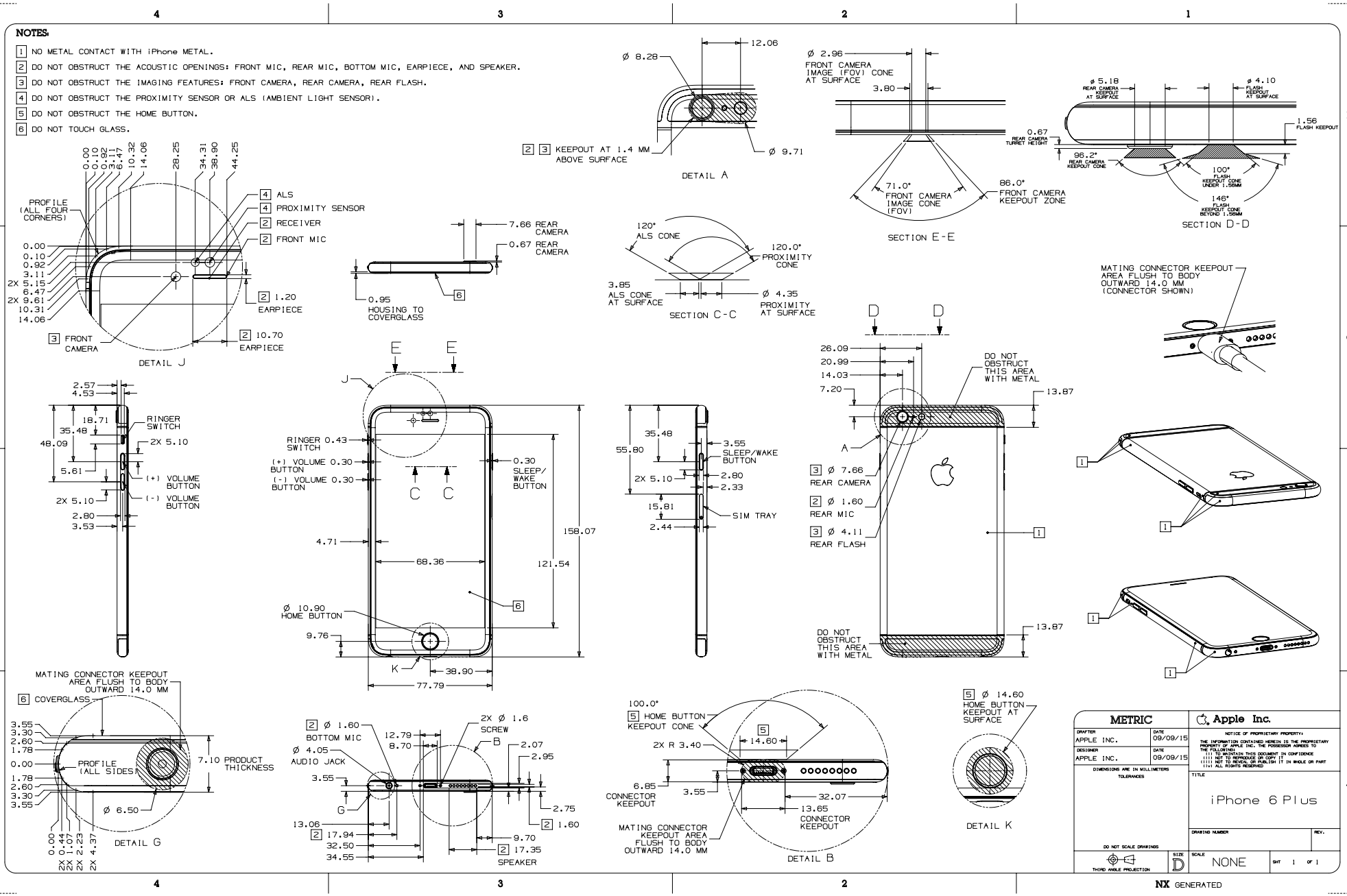

Copyright © 2024 Apple Inc. All Rights Reserved.

58.56 iPhone 6

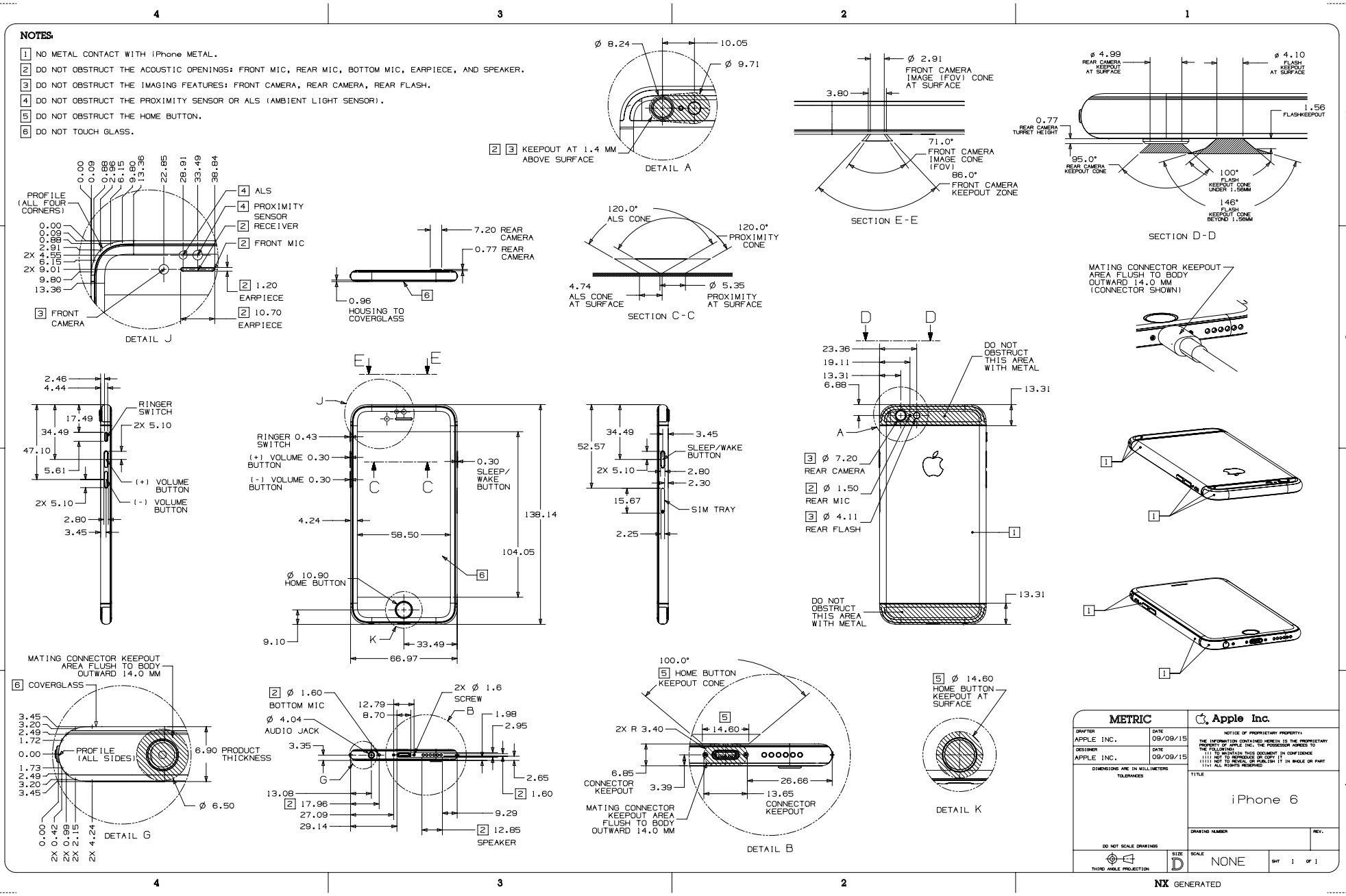

Copyright © 2024 Apple Inc. All Rights Reserved.

58.57 iPhone 5s and iPhone SE

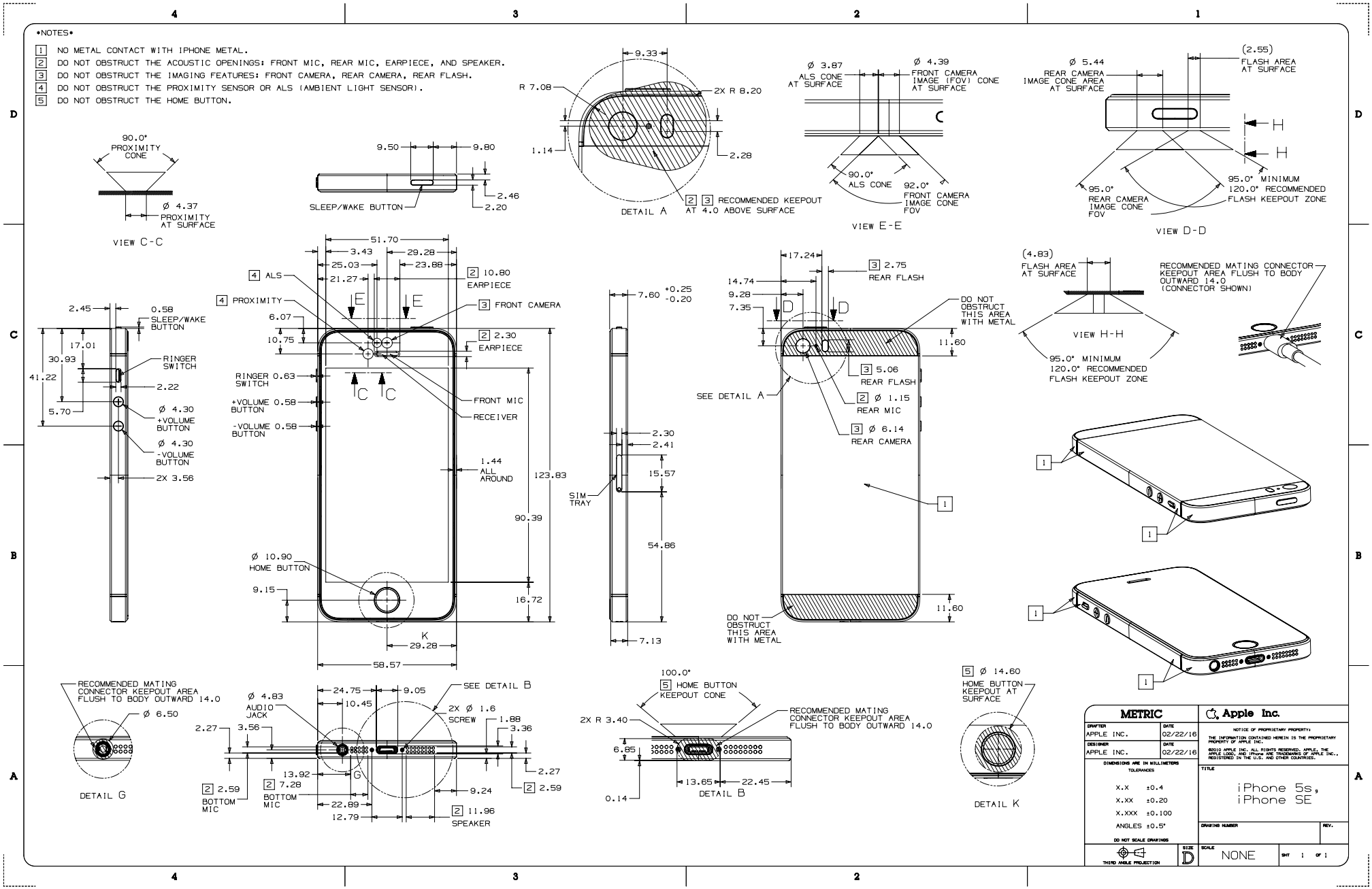

Copyright © 2024 Apple Inc. All Rights Reserved.

58.58 iPhone 5c

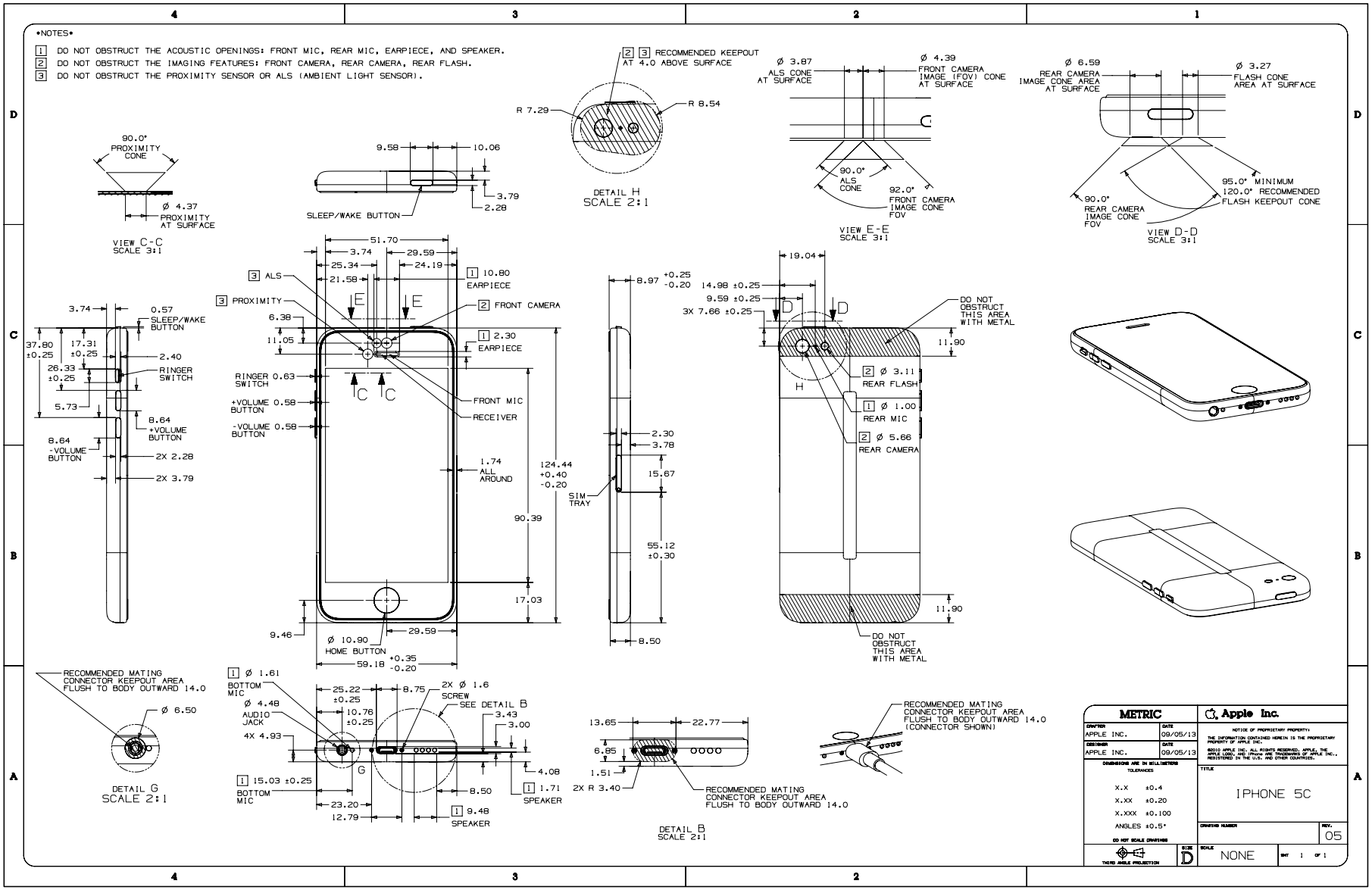

Copyright © 2024 Apple Inc. All Rights Reserved.

58.59 iPhone 5

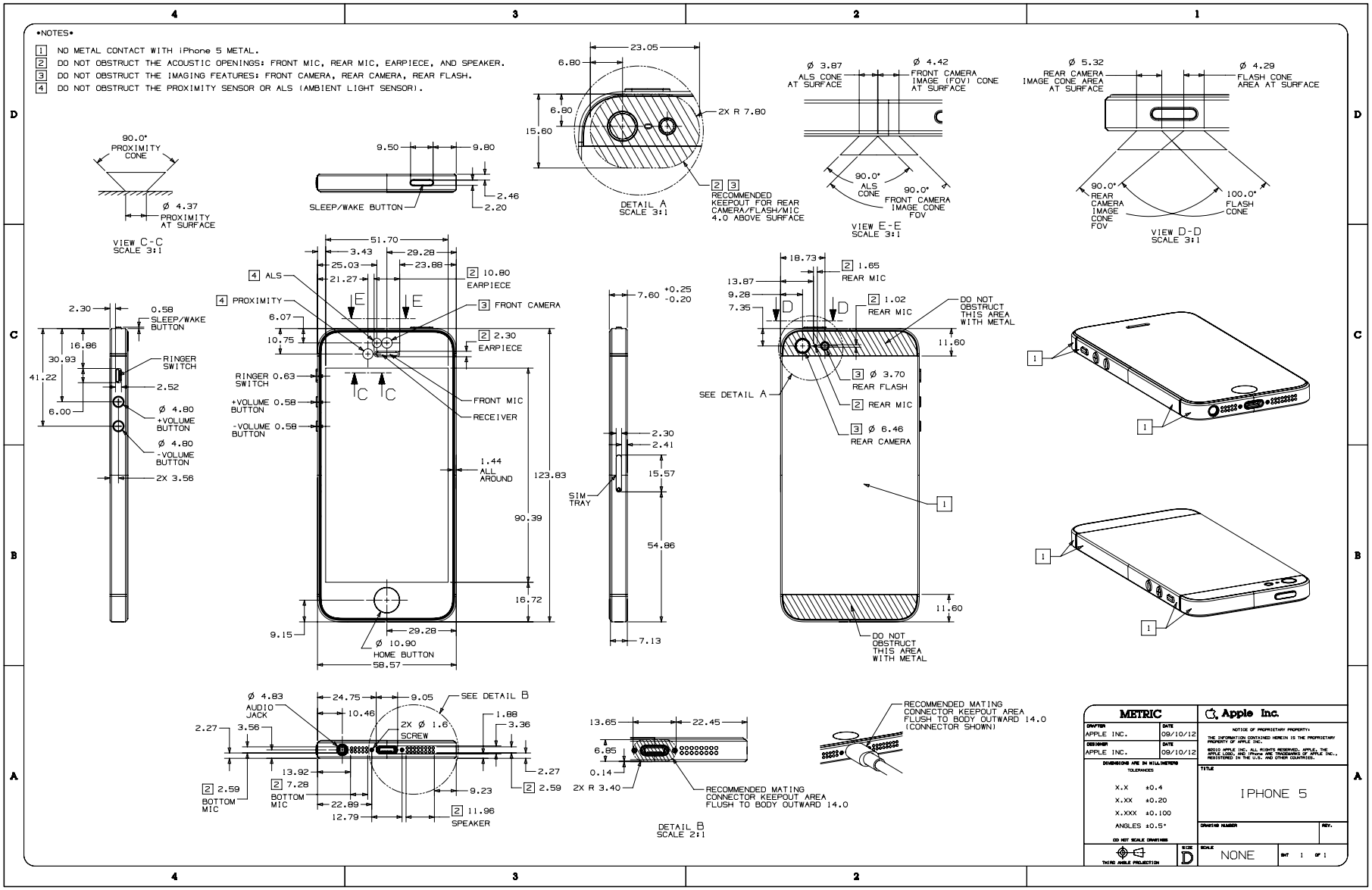

Copyright © 2024 Apple Inc. All Rights Reserved.

58.60 iPad Pro 13-inch (M4) 1 of 5

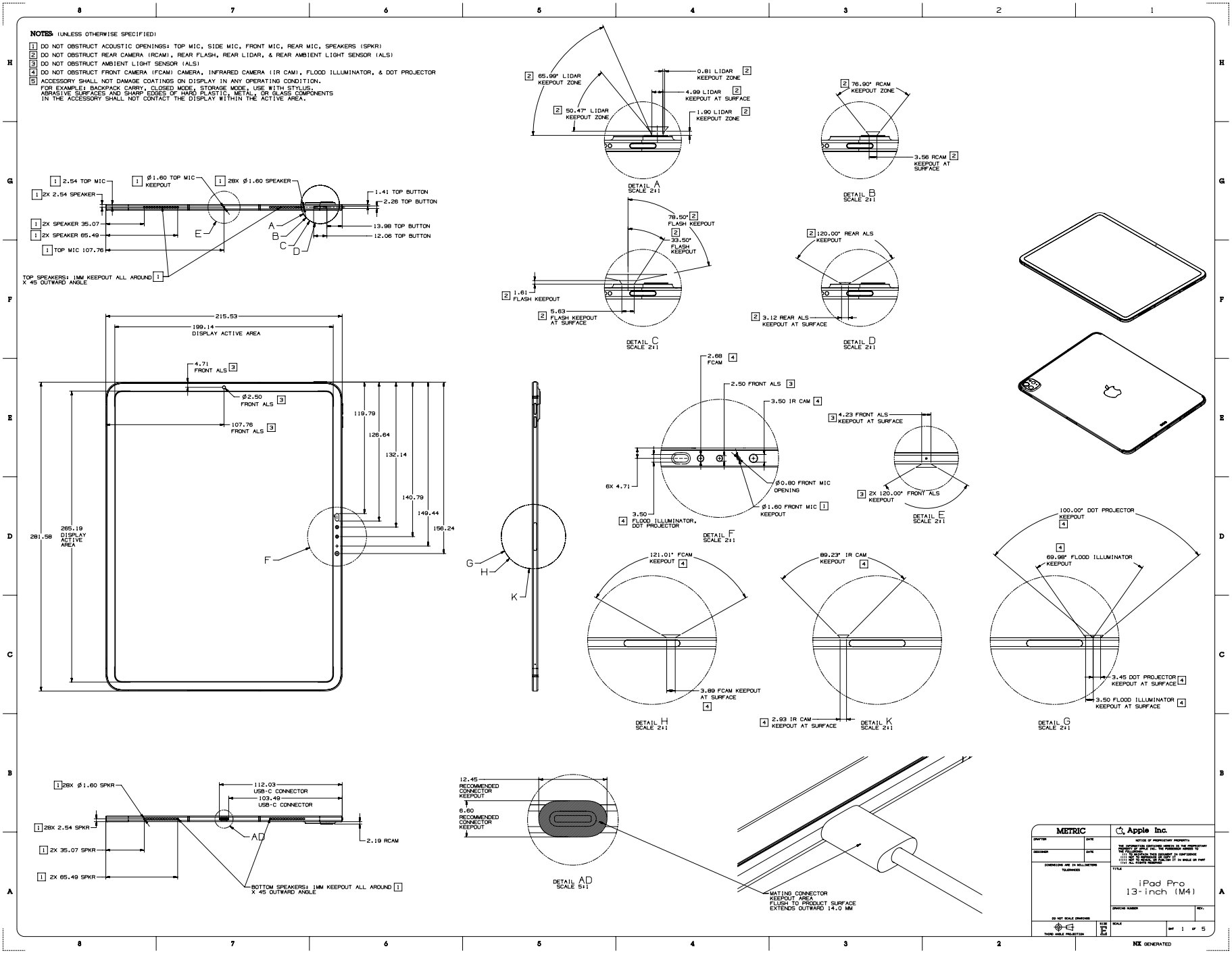

Copyright © 2024 Apple Inc. All Rights Reserved.

58.61 iPad Pro 13-inch (M4) 2 of 5

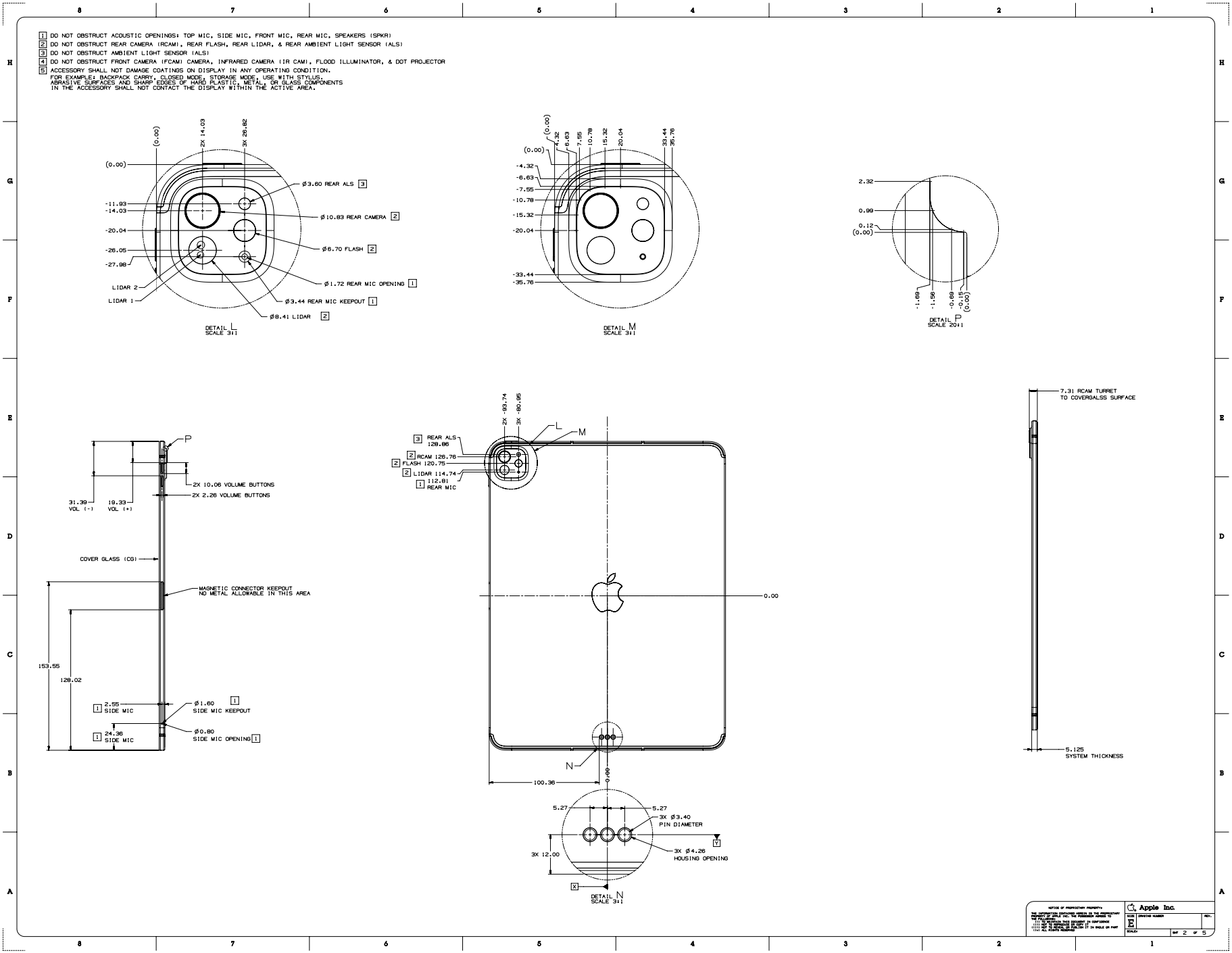

Copyright © 2024 Apple Inc. All Rights Reserved.

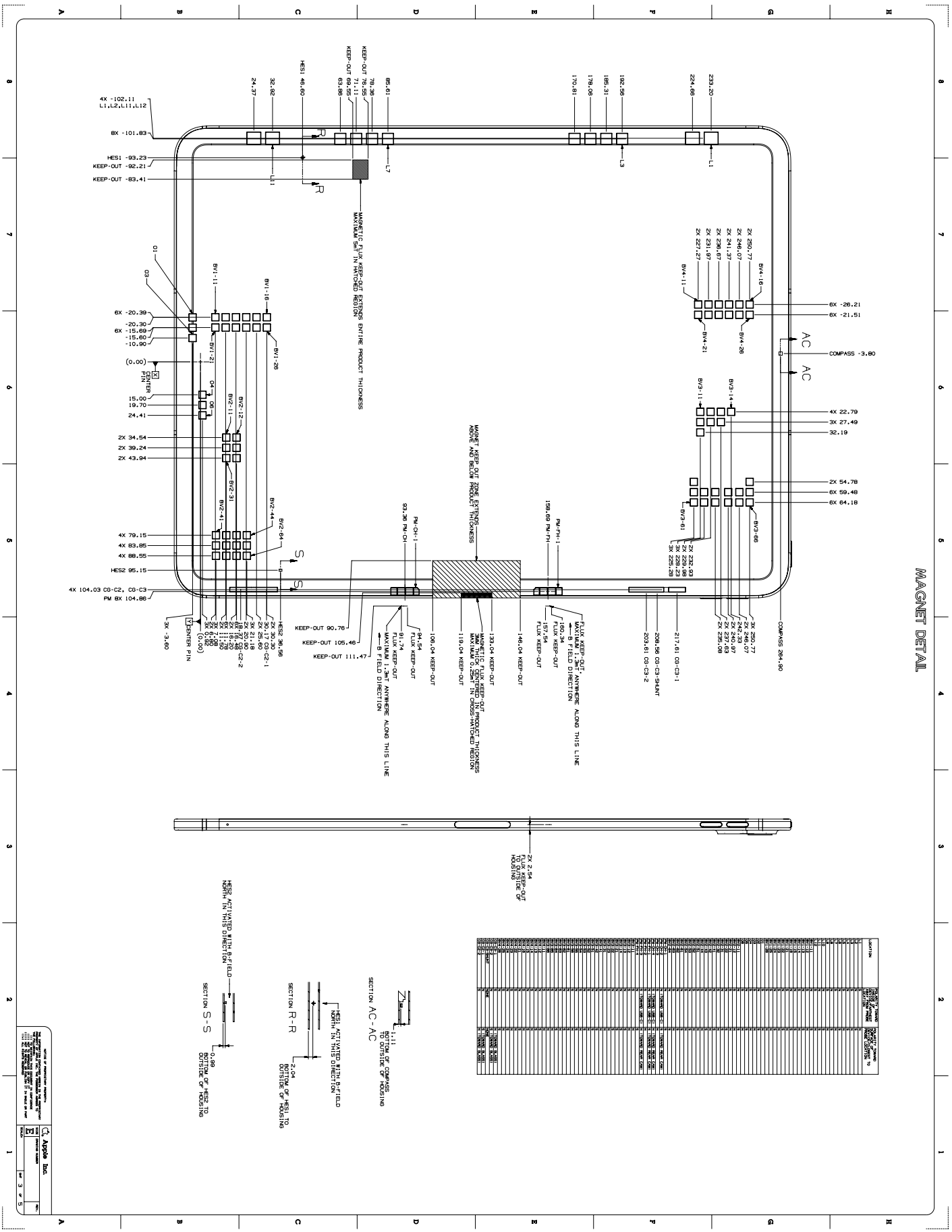

2024-05-13 | Copyright © 2024 Apple Inc. All Rights Reserved.

58.63 iPad Pro 13-inch (M4) 4 of 5

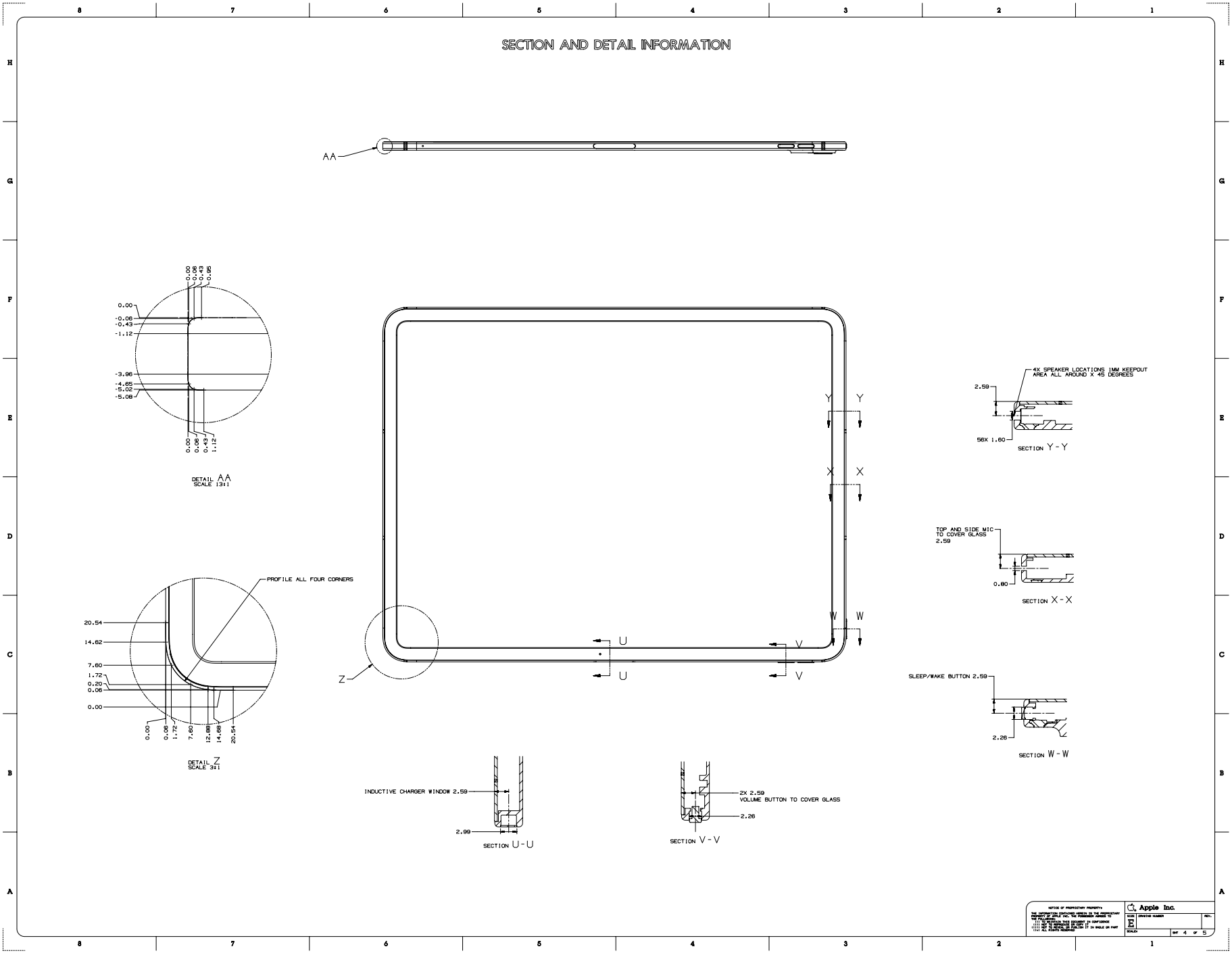

Copyright © 2024 Apple Inc. All Rights Reserved.

58.64 iPad Pro 13-inch (M4) 5 of 5

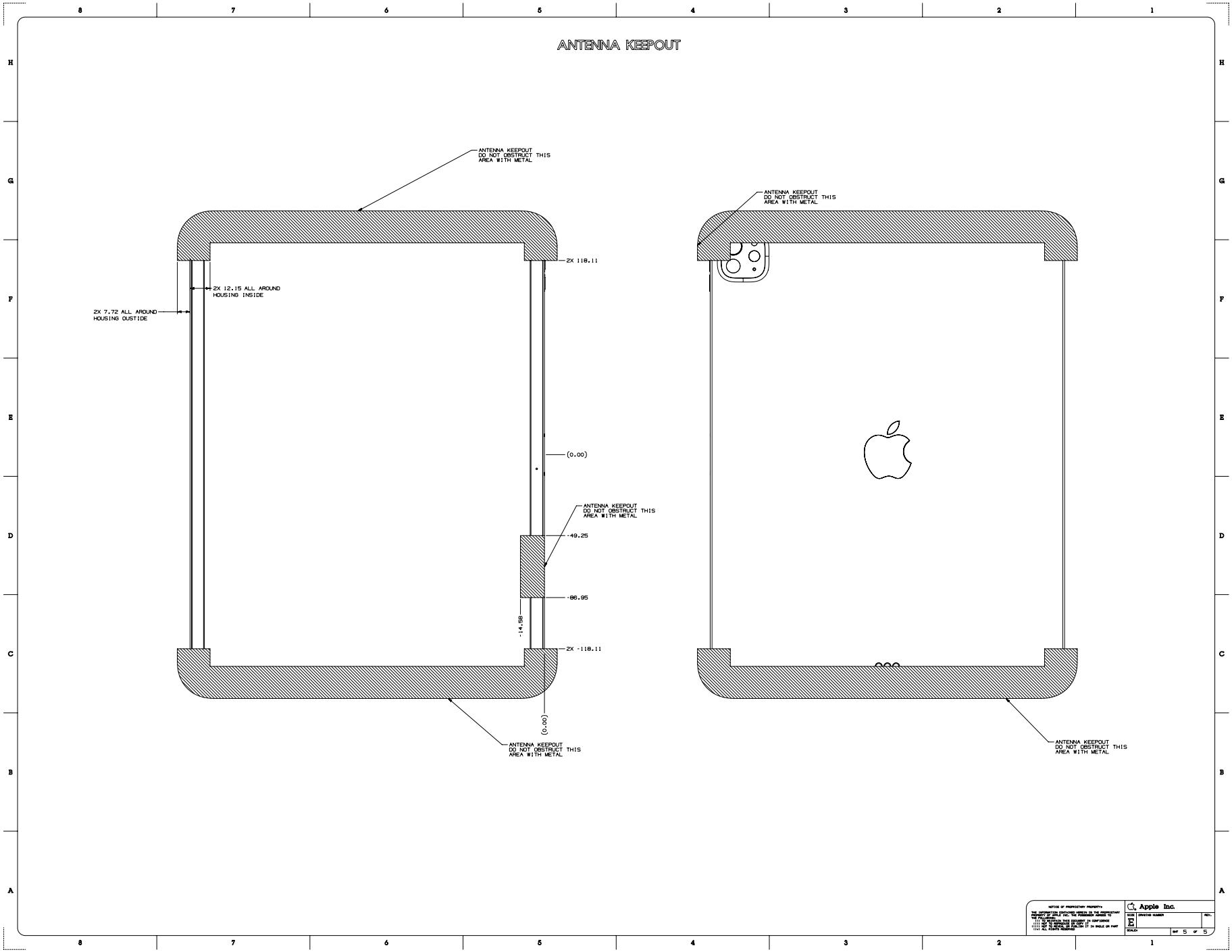

58.65 iPad Pro 11-inch (M4) 1 of 5

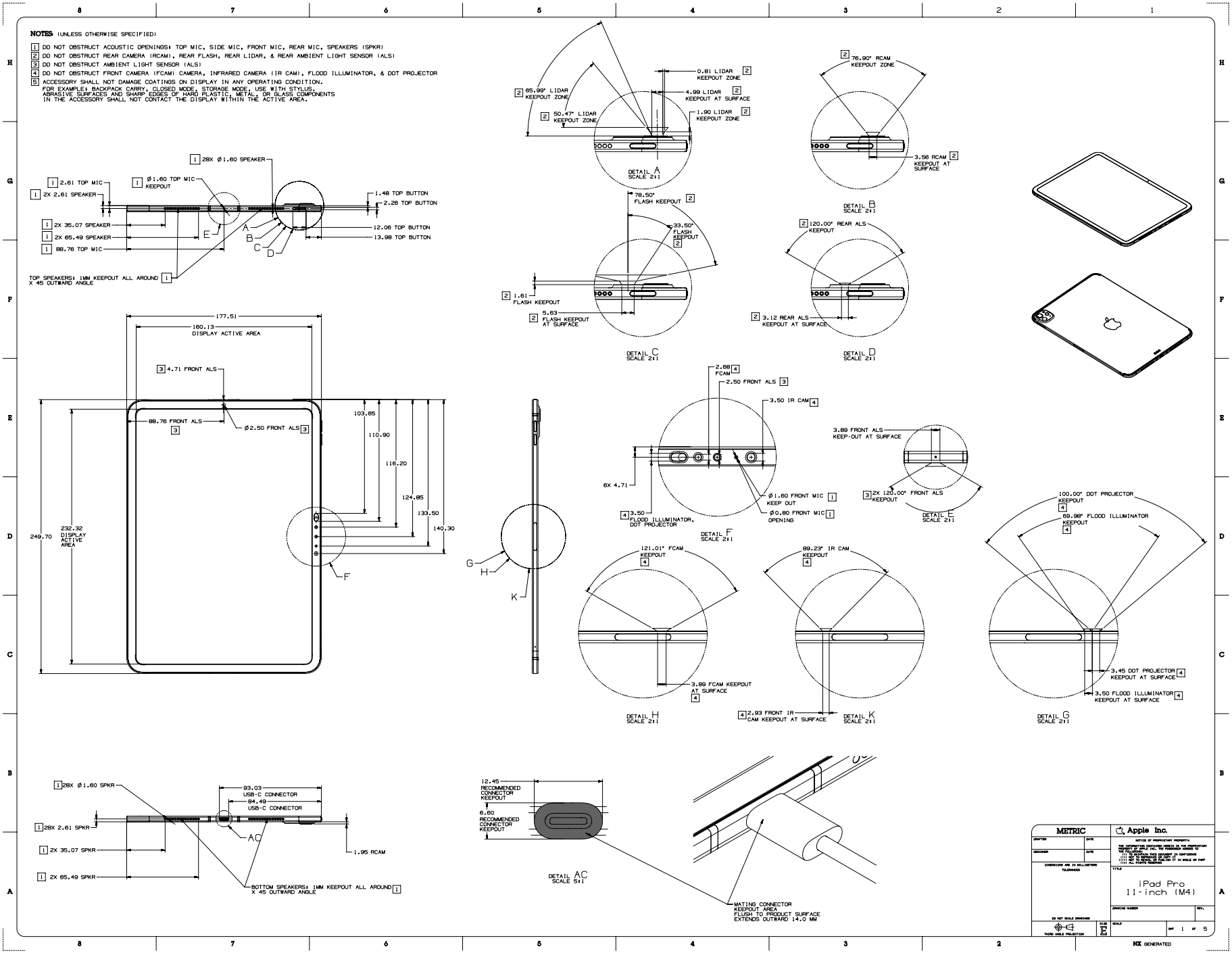

Copyright © 2024 Apple Inc. All Rights Reserved.

58.66 iPad Pro 11-inch (M4) 2 of 5

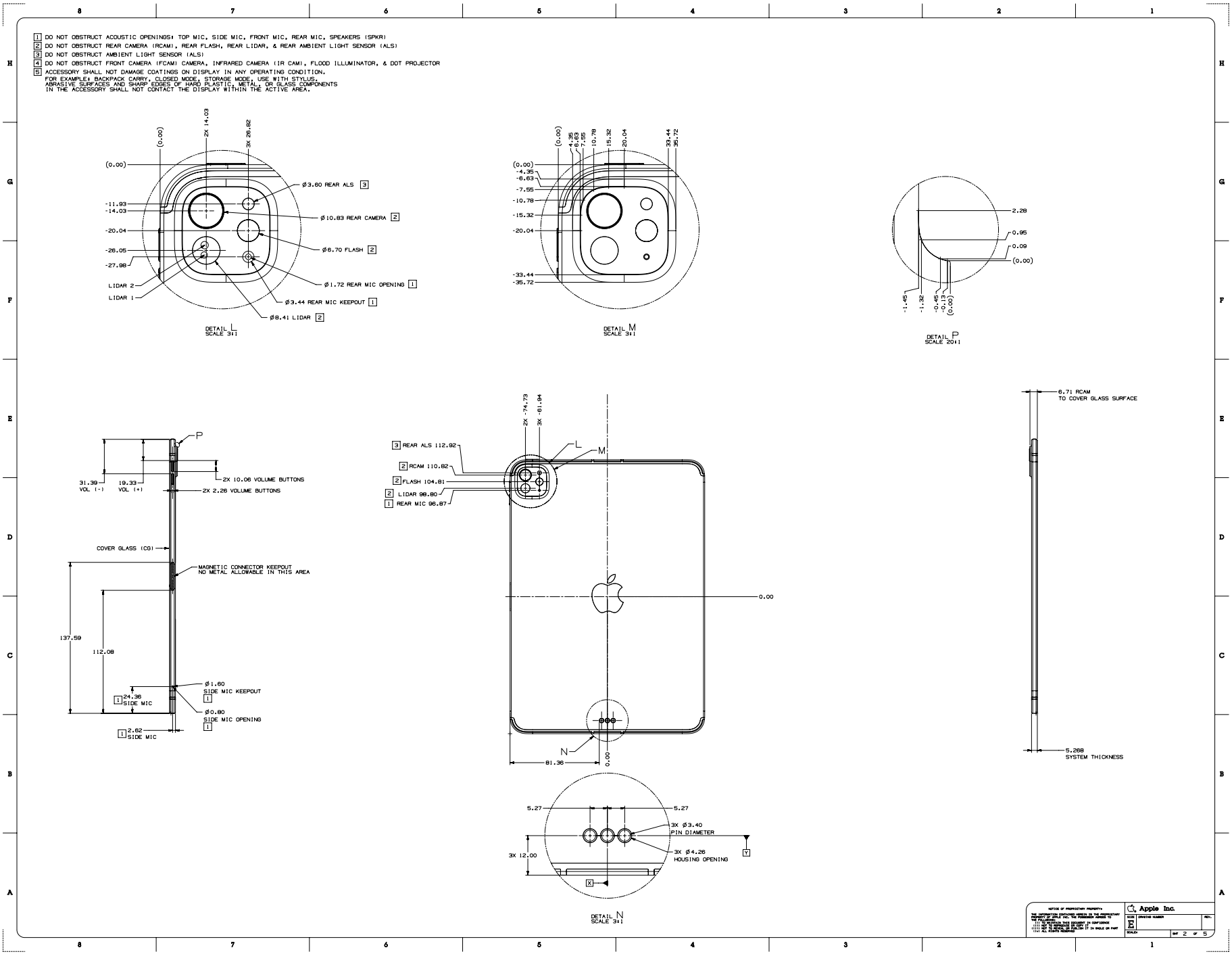

Copyright © 2024 Apple Inc. All Rights Reserved.

58.67 iPad Pro 11-inch (M4) 3 of 5

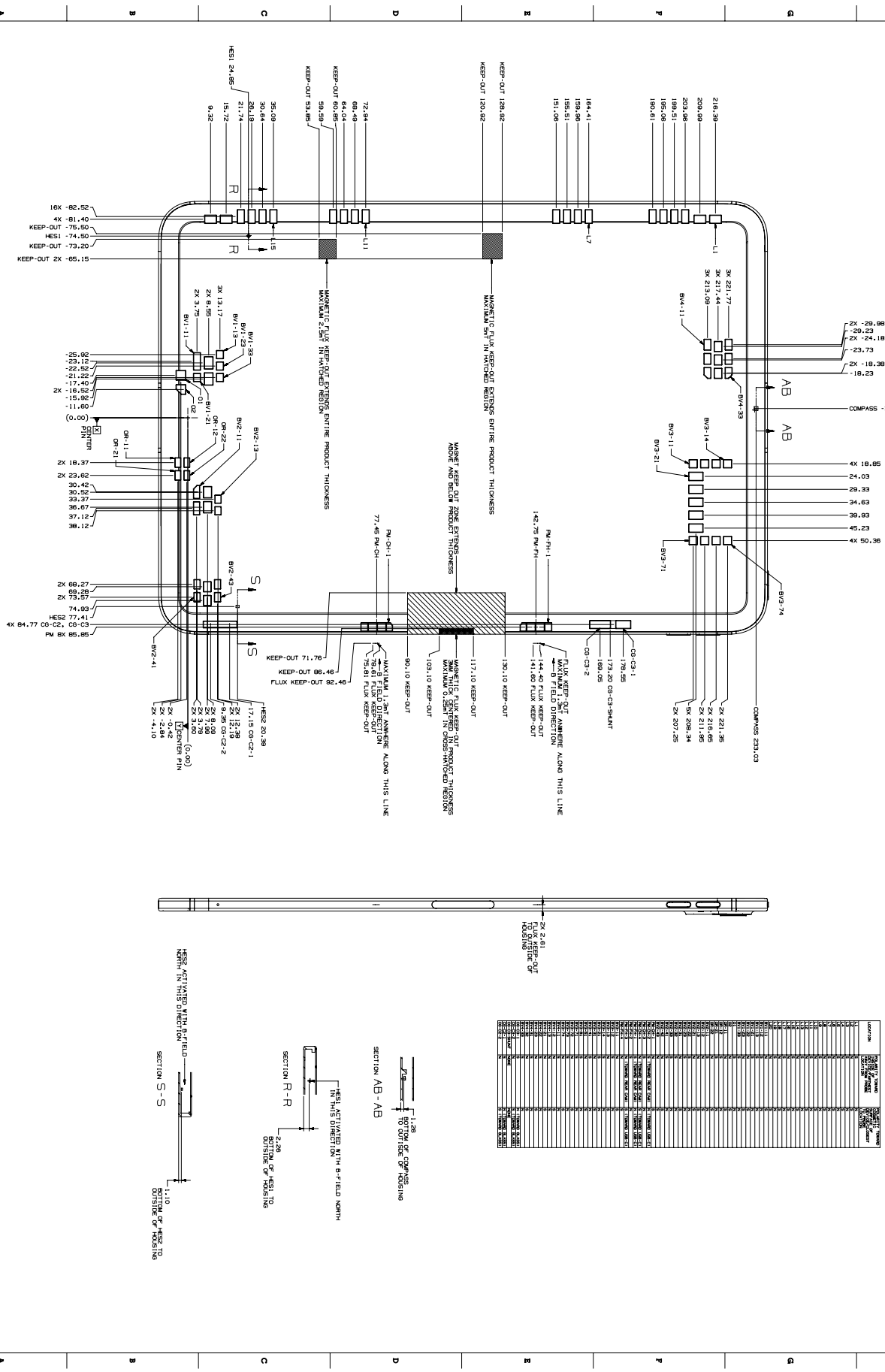

2024-05-13 | Copyright © 2024 Apple Inc. All Rights Reserved.

58.68 iPad Pro 11-inch (M4) 4 of 5

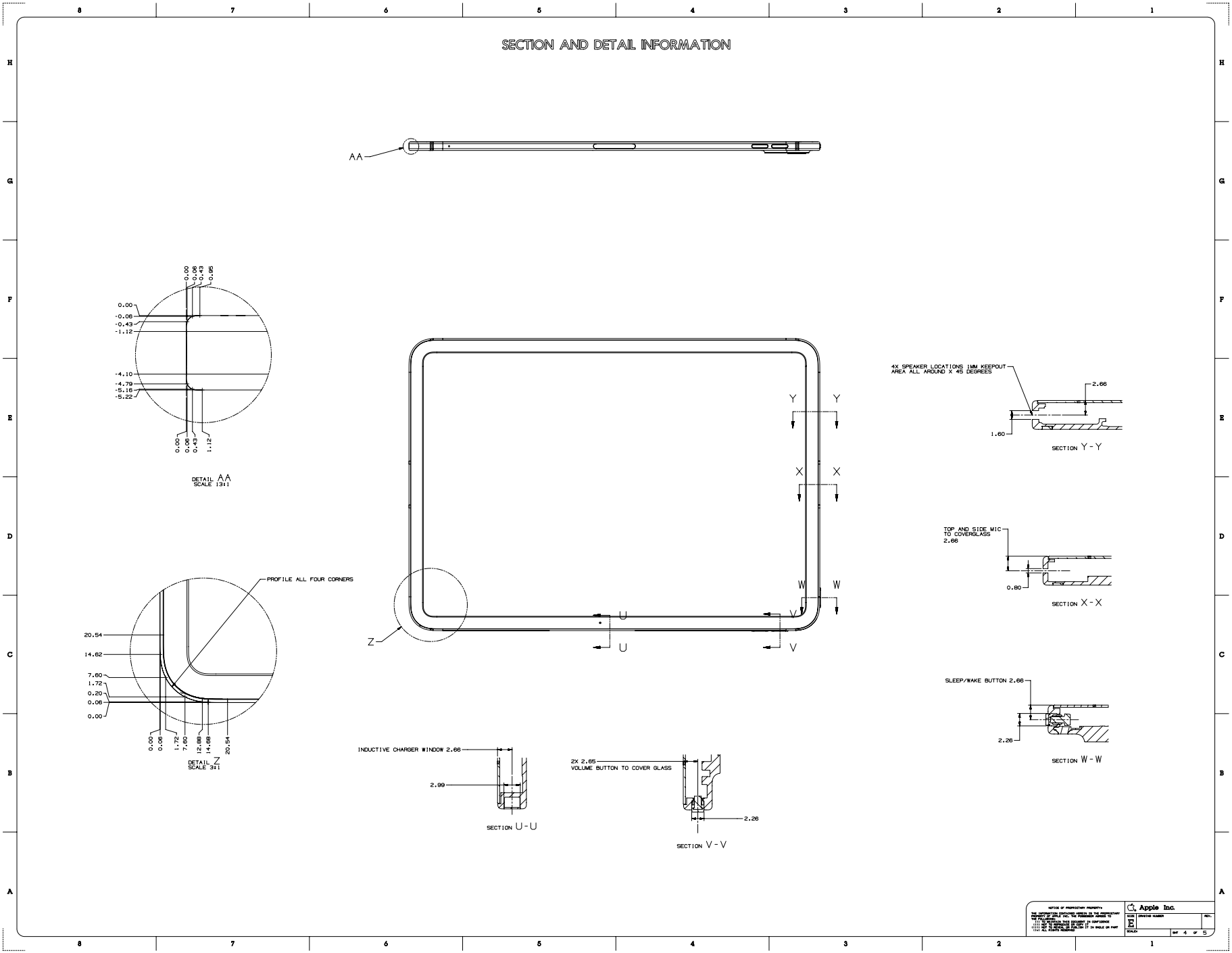

Copyright © 2024 Apple Inc. All Rights Reserved.

58.69 iPad Pro 11-inch (M4) 5 of 5

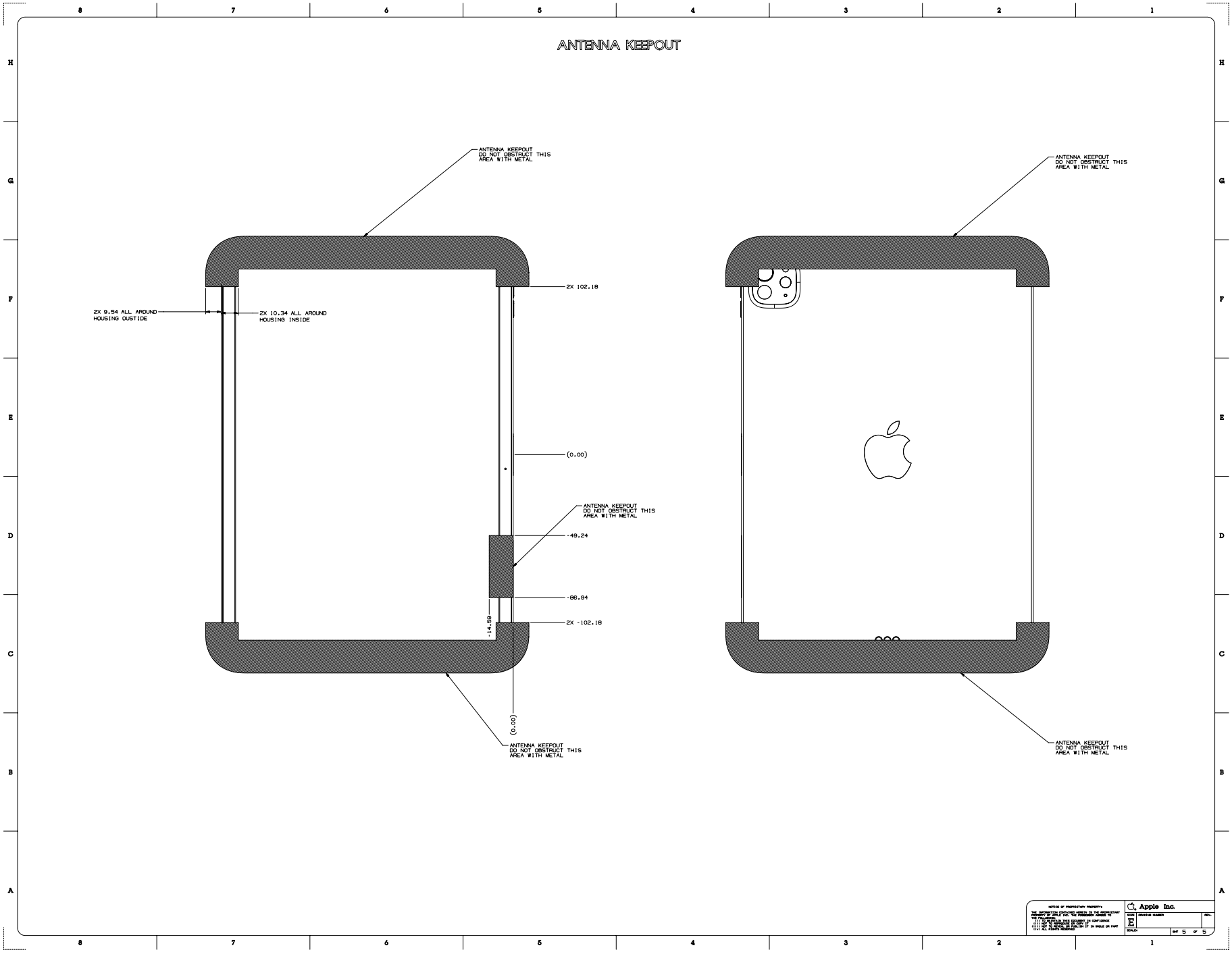

Copyright © 2024 Apple Inc. All Rights Reserved.

58.70 iPad Air 13-inch (M2) 1 of 5

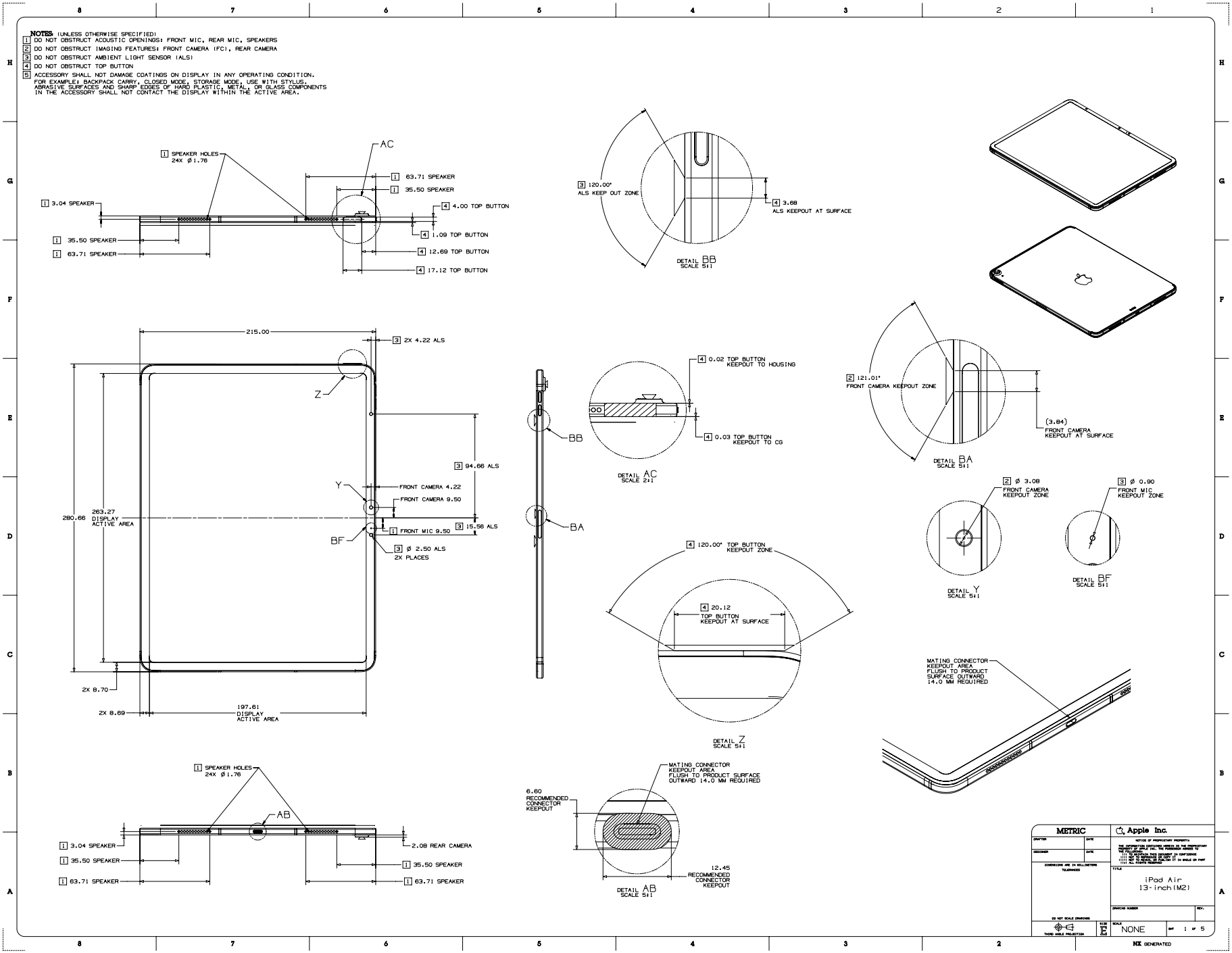

Copyright © 2024 Apple Inc. All Rights Reserved.

58.71 iPad Air 13-inch (M2) 2 of 5

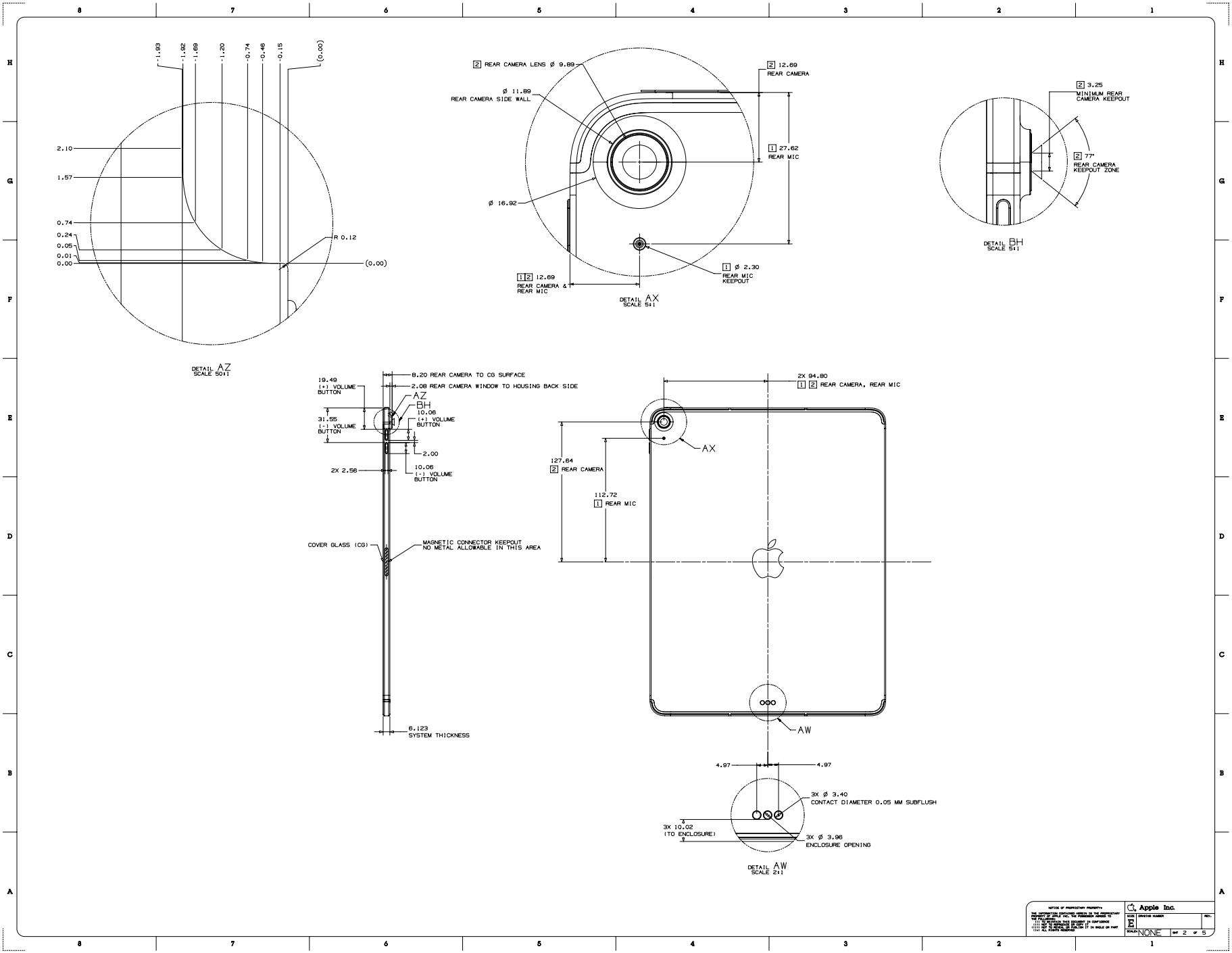

Copyright © 2024 Apple Inc. All Rights Reserved.

58.72 iPad Air 13-inch (M2) 3 of 5

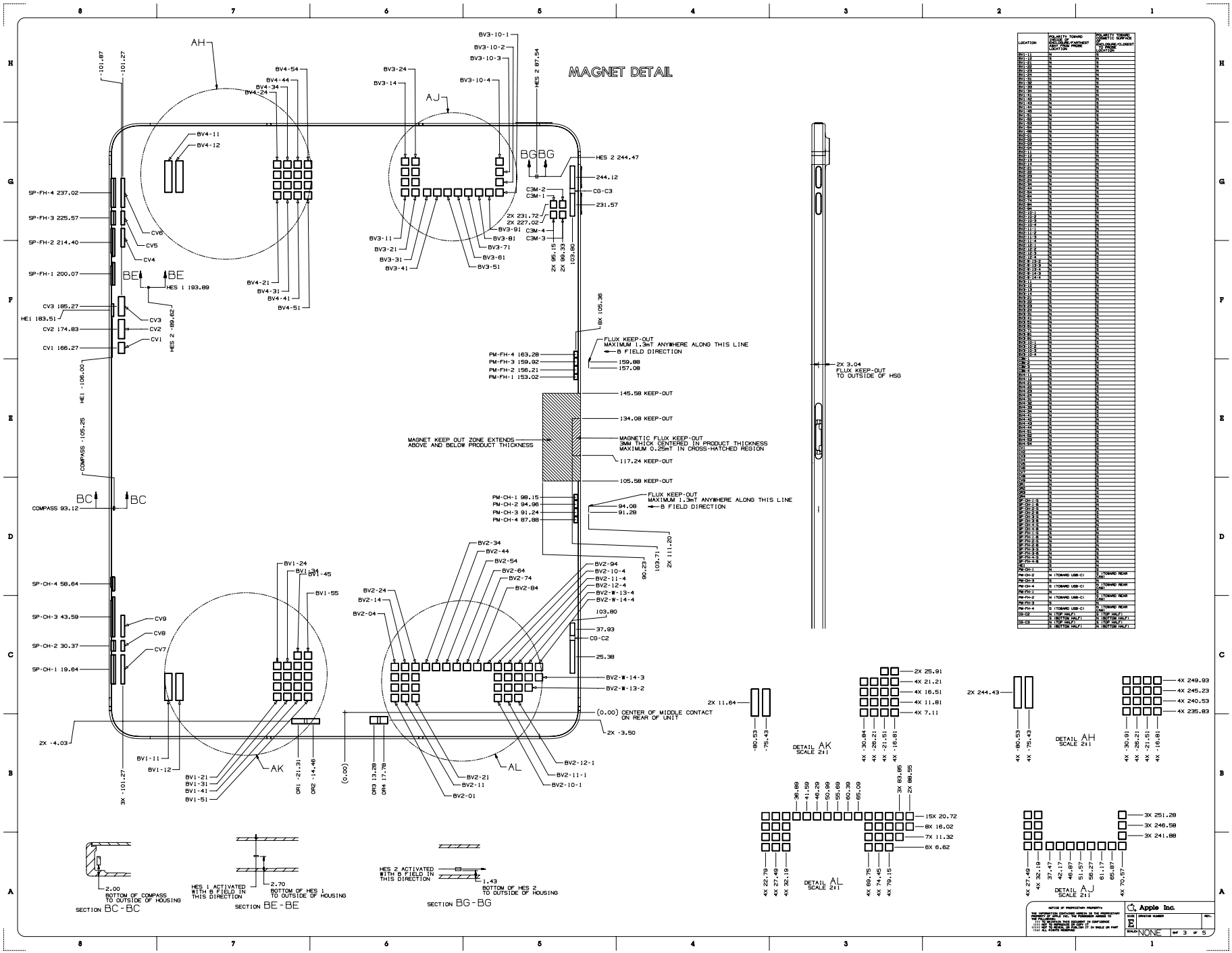

Copyright © 2024 Apple Inc. All Rights Reserved.

58.73 iPad Air 13-inch (M2) 4 of 5

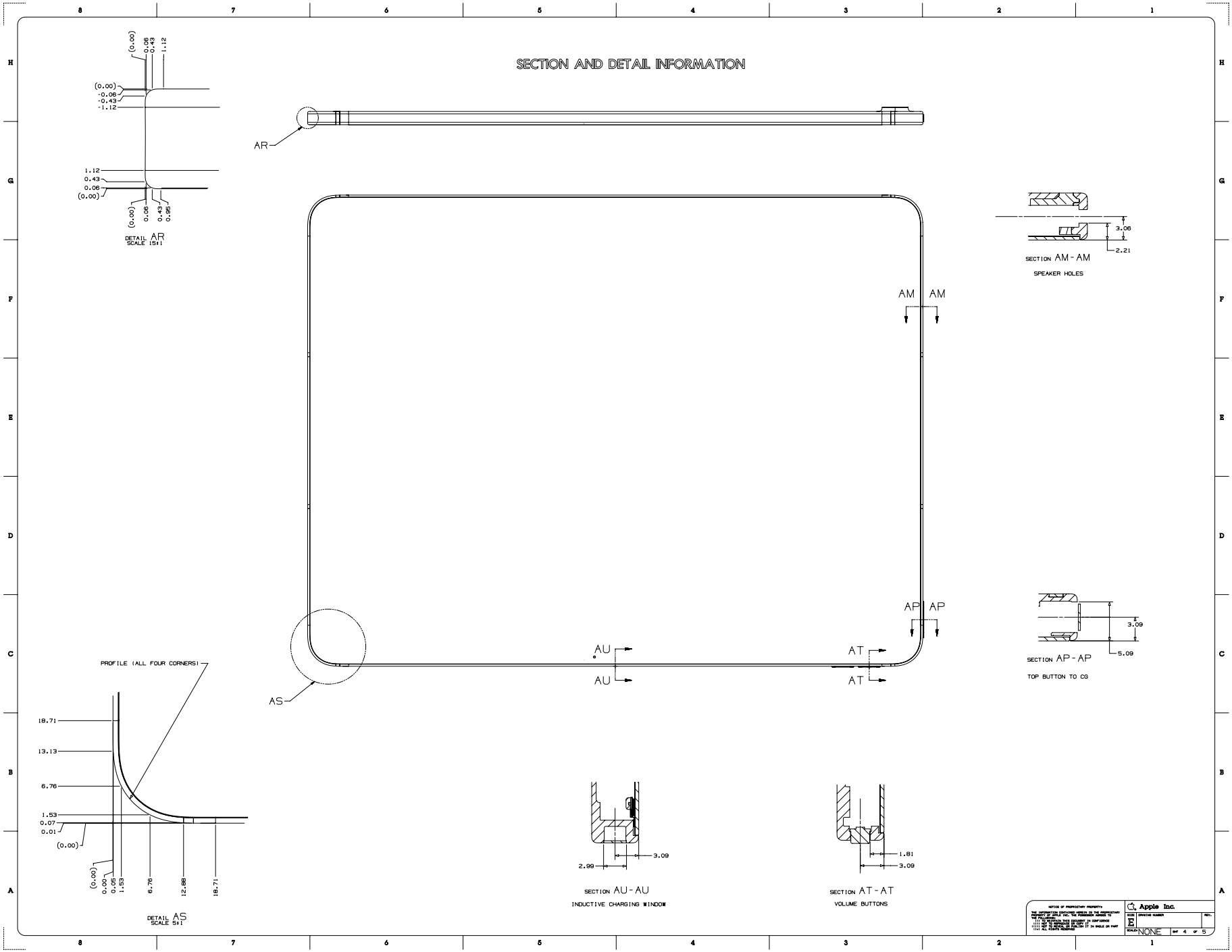

 Copyright © 2024 Apple Inc. All Rights Reserved.

58.74 iPad Air 13-inch (M2) 5 of 5

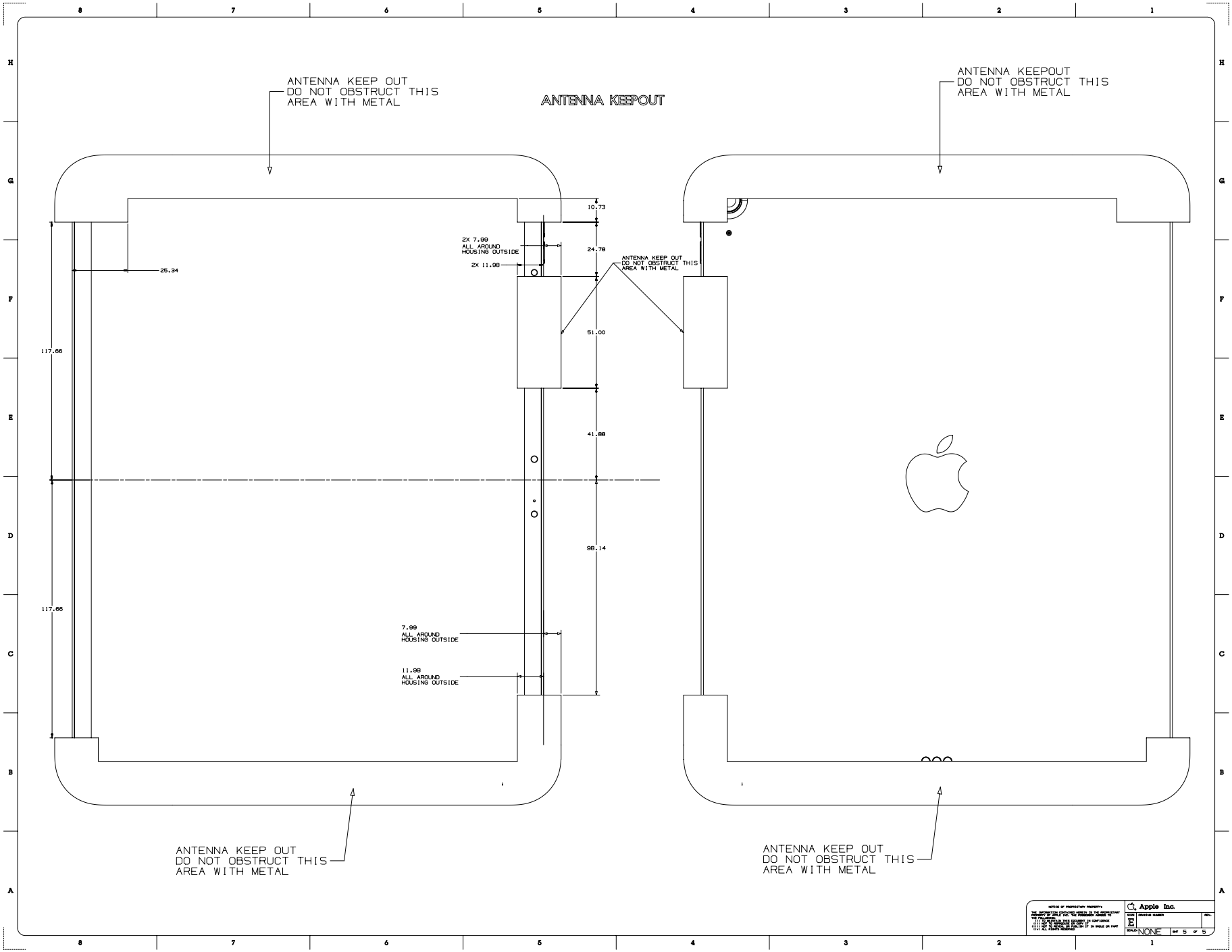

Copyright © 2024 Apple Inc. All Rights Reserved.

58.75 iPad Air 11-inch (M2) 1 of 5

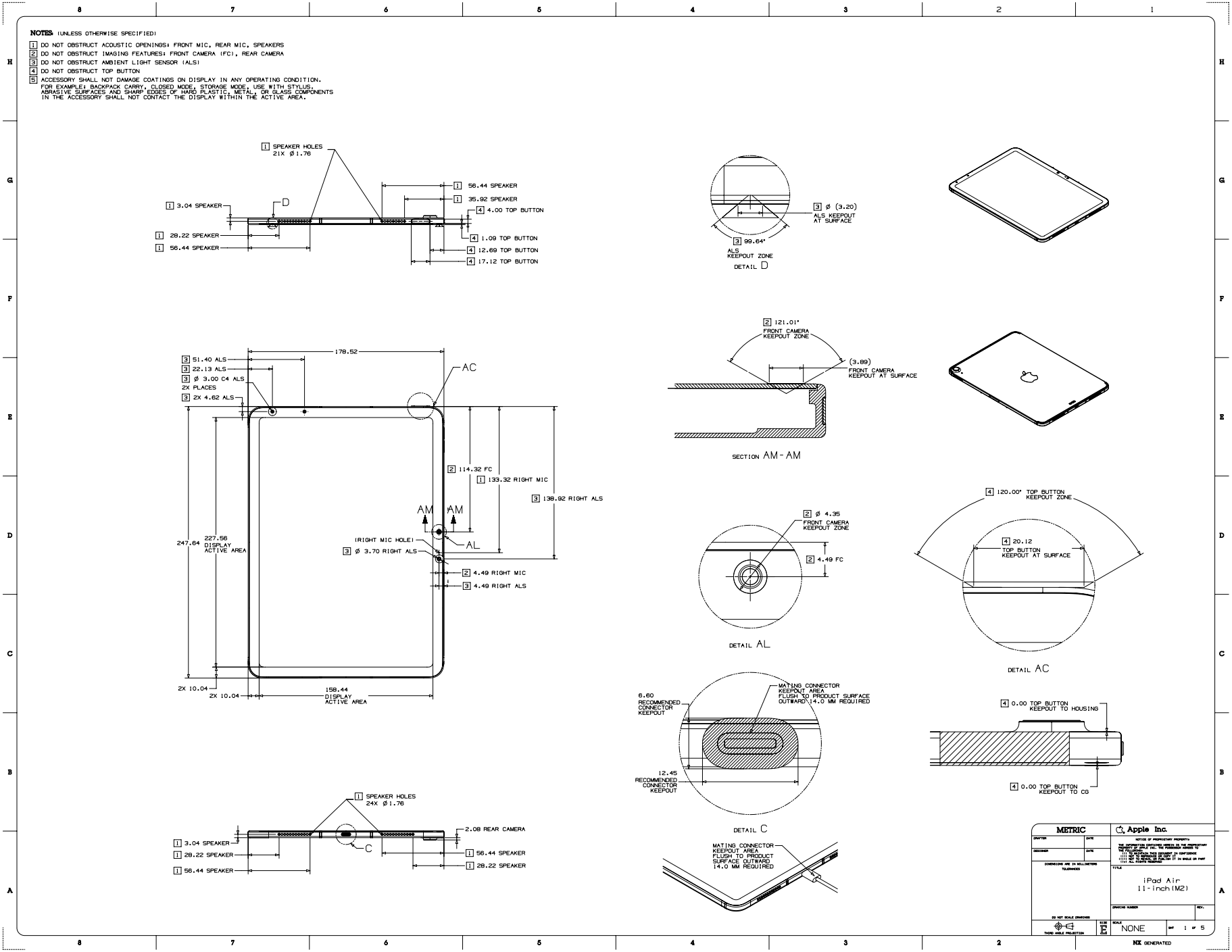

Copyright © 2024 Apple Inc. All Rights Reserved.

58.76 iPad Air 11-inch (M2) 2 of 5

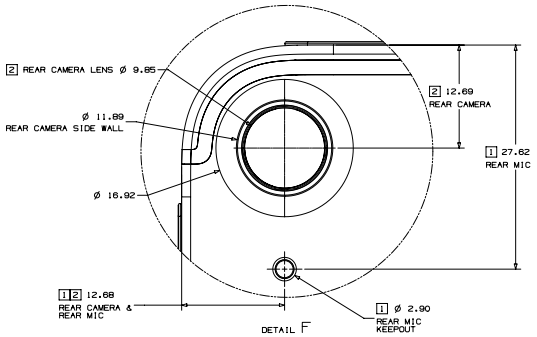

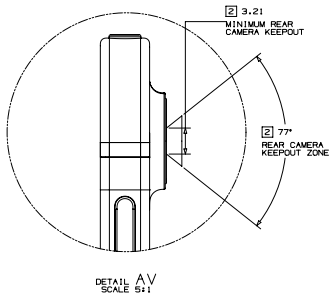

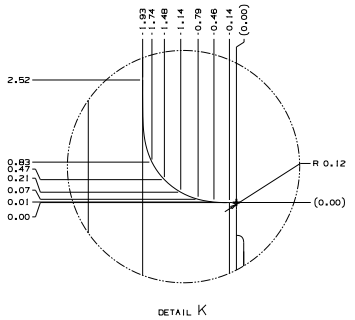

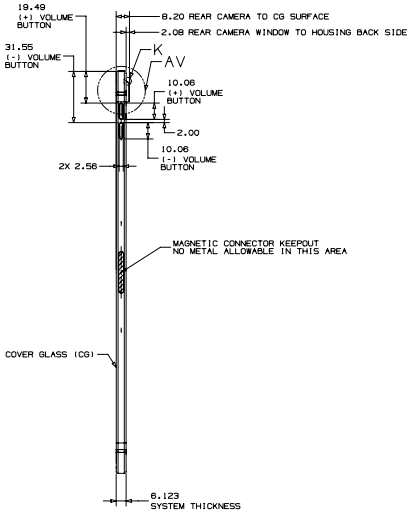

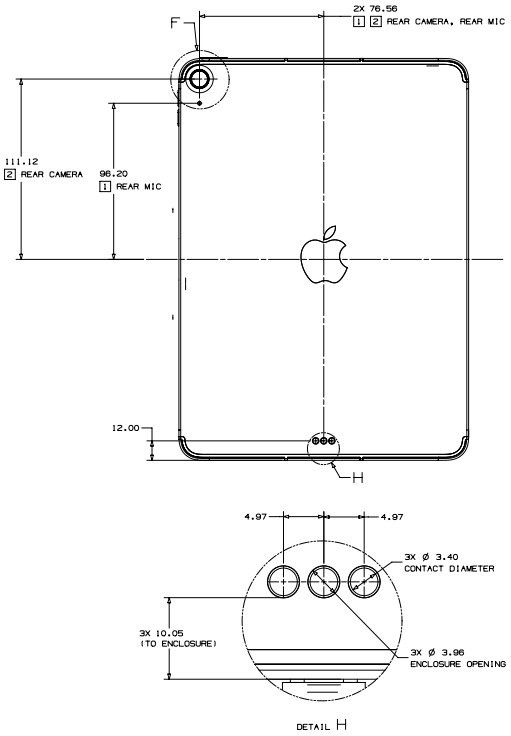

NOTICE OF PROPRIETARY PROPERTY
THE INFORMATION CONTAINED HEREIN IS THE PROPRIETARY PROPERTY OF APPLE INC. THE POSSESSOR AGREES TO:
(1) NOT REPRODUCE THIS DOCUMENT IN WHOLE OR IN PART
(2) NOT TO DISCLOSE ANY INFORMATION CONTAINED HEREIN
(3) NOT TO REPRODUCE OR DISCLOSE IT IN WHOLE OR PART WITHOUT THE WRITTEN PERMISSION OF APPLE INC.
(4) ALL RIGHTS RESERVED.

Apple Inc.

SIZE E | DRAWING NUMBER | REV.

SHT 2 OF 5

58.77 iPad Air 11-inch (M2) 3 of 5

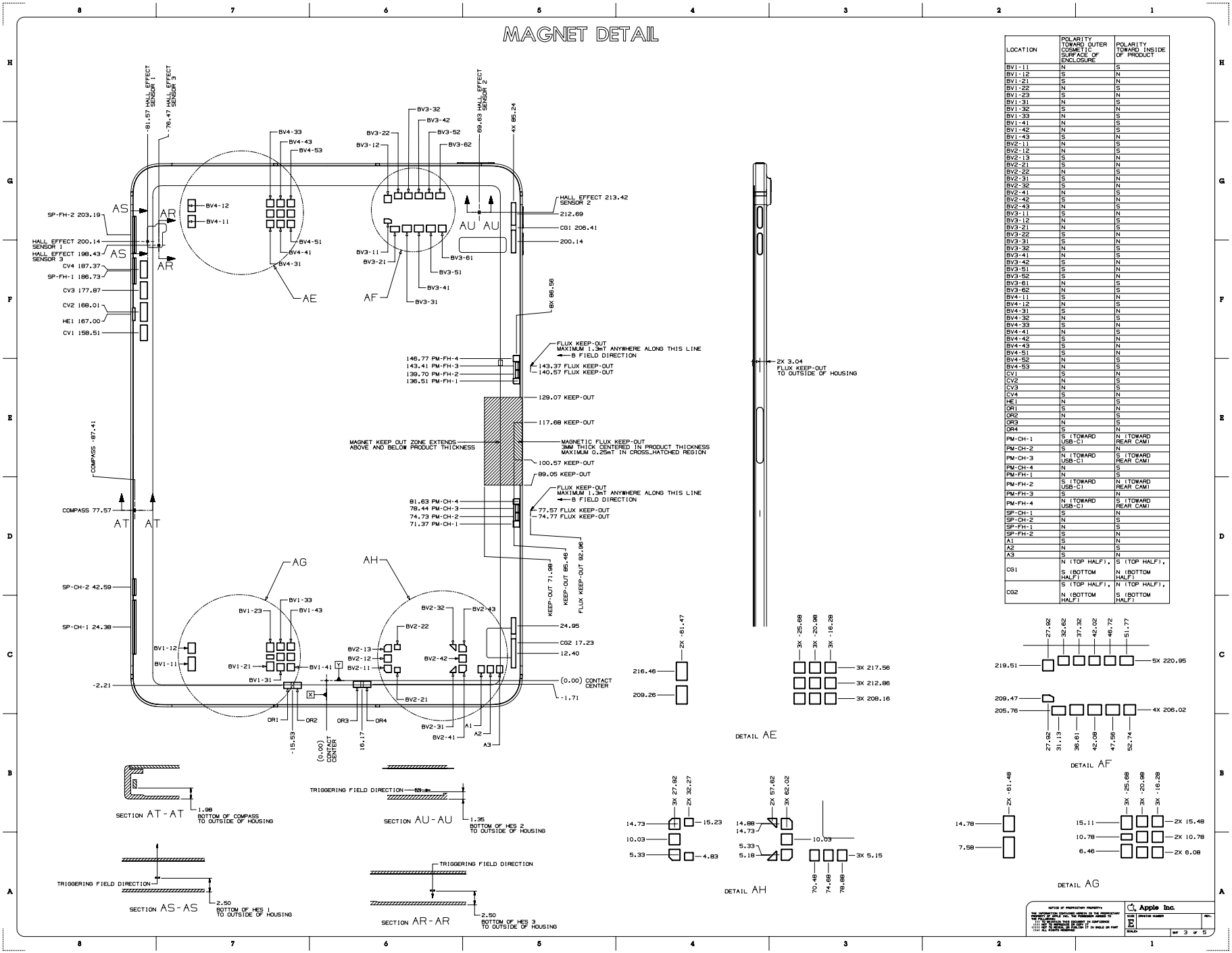

LOCATION	POLARITY TOWARD OUTER COSMETIC SURFACE OF ENCLOSURE	POLARITY TOWARD INSIDE OF PRODUCT
BV1-11	N	S
BV1-12	S	N
BV1-21	S	N
BV1-22	N	S
BV1-23	S	N
BV1-31	N	S
BV1-32	S	N
BV1-33	N	S
BV1-41	N	S
BV1-42	N	S
BV1-43	S	N
BV2-11	N	S
BV2-12	N	S
BV2-13	S	N
BV2-21	S	N
BV2-22	N	S
BV2-31	S	N
BV2-32	S	N
BV2-41	N	S
BV2-42	S	N
BV2-43	N	S
BV3-11	S	N
BV3-12	N	S
BV3-21	N	S
BV3-22	S	N
BV3-31	S	N
BV3-32	N	S
BV3-41	N	S
BV3-42	S	N
BV3-51	S	N
BV3-52	S	N
BV3-61	N	S
BV3-62	N	S
BV4-11	S	N
BV4-12	N	S
BV4-31	S	N
BV4-32	N	S
BV4-33	S	N
BV4-41	N	S
BV4-42	S	N
BV4-43	S	N
BV4-51	S	N
BV4-52	N	S
BV4-53	N	S
CV1	S	N
CV2	N	S
CV3	N	S
CV4	S	N
HE1	N	S
OR1	S	N
OR2	N	S
OR3	N	S
OR4	S	N
PM-CH-1	S (TOWARD USB-C)	N (TOWARD REAR CAM)
PM-CH-2	S	N
PM-CH-3	N (TOWARD USB-C)	S (TOWARD REAR CAM)
PM-CH-4	N	S
PM-FH-1	N	S
PM-FH-2	S (TOWARD USB-C)	N (TOWARD REAR CAM)
PM-FH-3	S	N
PM-FH-4	N (TOWARD USB-C)	S (TOWARD REAR CAM)
SP-CH-1	S	N
SP-CH-2	N	S
SP-FH-1	N	S
SP-FH-2	S	N
A1	S	N
A2	N	S
A3	S	N
CG1	N (TOP HALF), S (BOTTOM HALF)	S (TOP HALF), N (BOTTOM HALF)
CG2	S (TOP HALF), N (BOTTOM HALF)	N (TOP HALF), S (BOTTOM HALF)

58.78 iPad Air 11-inch (M2) 4 of 5

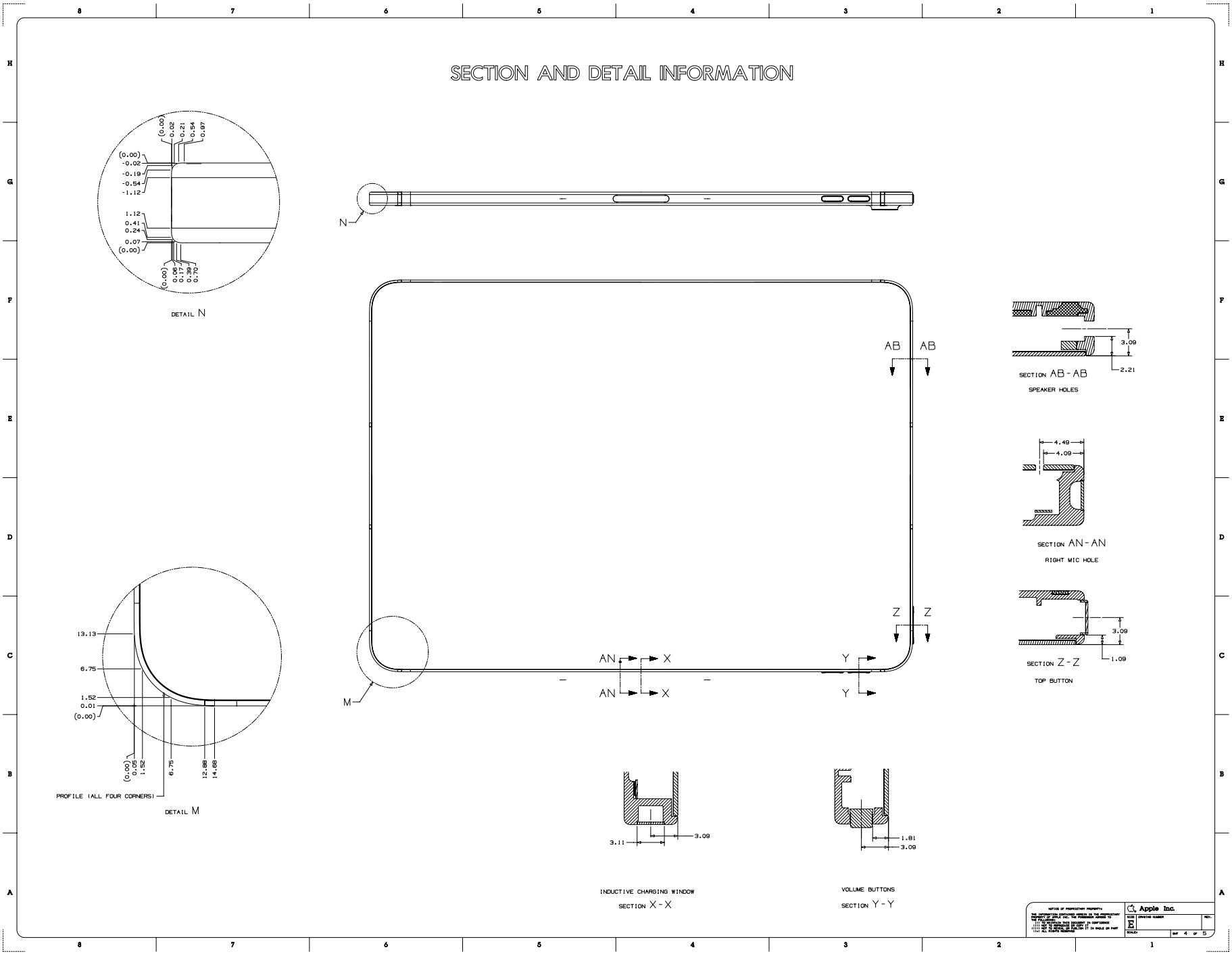

Copyright © 2024 Apple Inc. All Rights Reserved.

58.79 iPad Air 11-inch (M2) 5 of 5

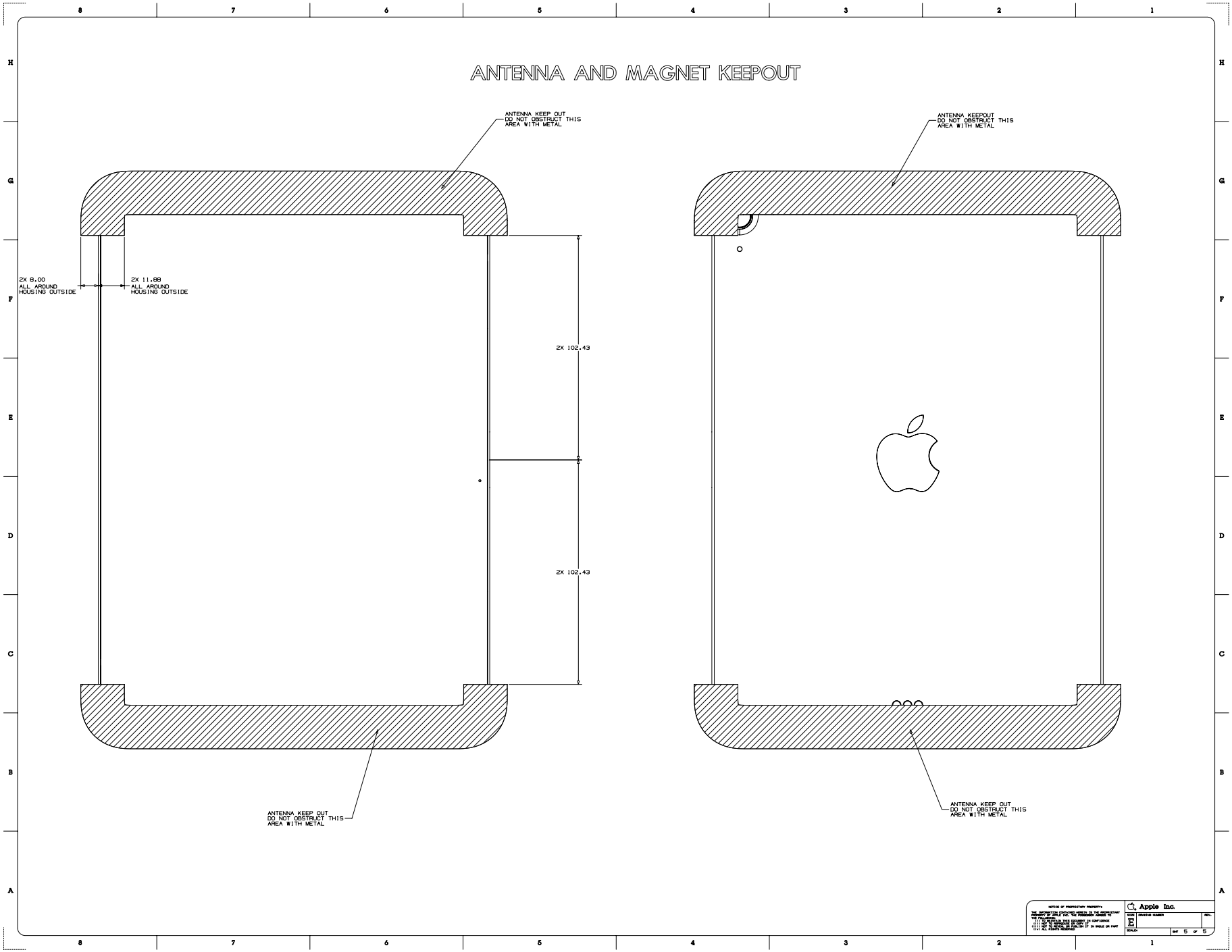

Copyright © 2024 Apple Inc. All Rights Reserved.

58.80 iPad Pro 12.9-inch (6th generation) 1 of 5

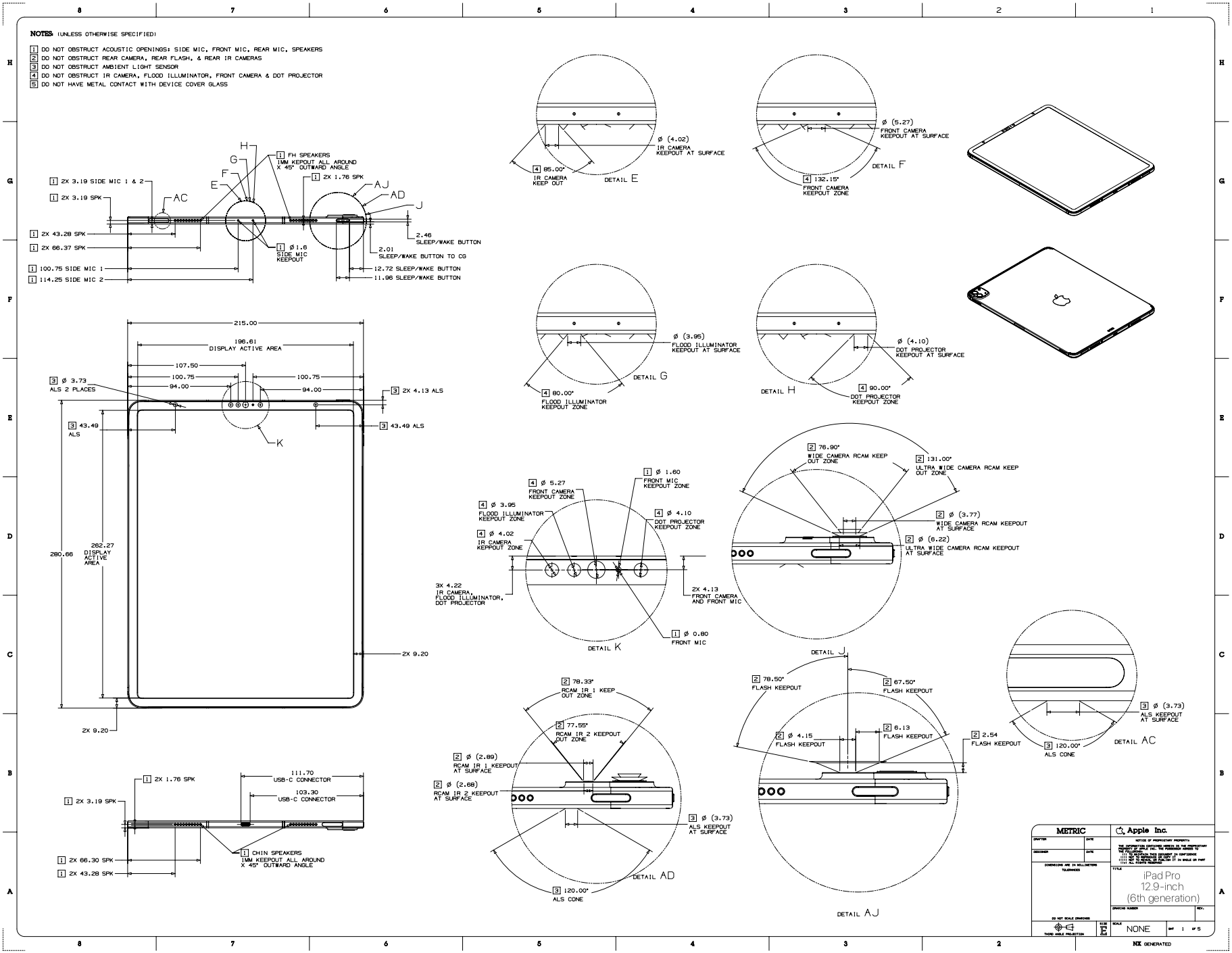

Copyright © 2024 Apple Inc. All Rights Reserved.

58.81 iPad Pro 12.9-inch (6th generation) 2 of 5

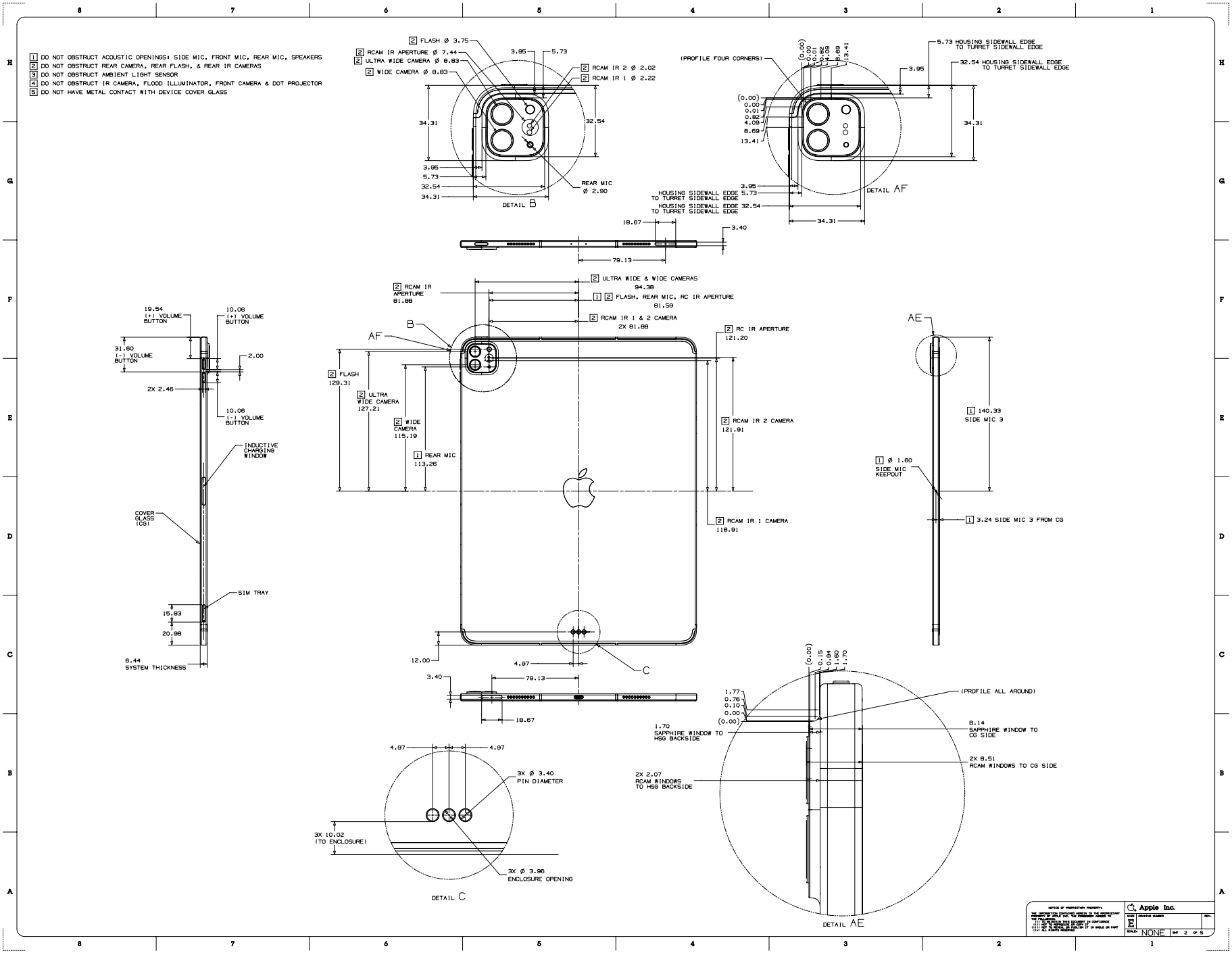

Copyright © 2024 Apple Inc. All Rights Reserved.

58.82 iPad Pro 12.9-inch (6th generation) 3 of 5

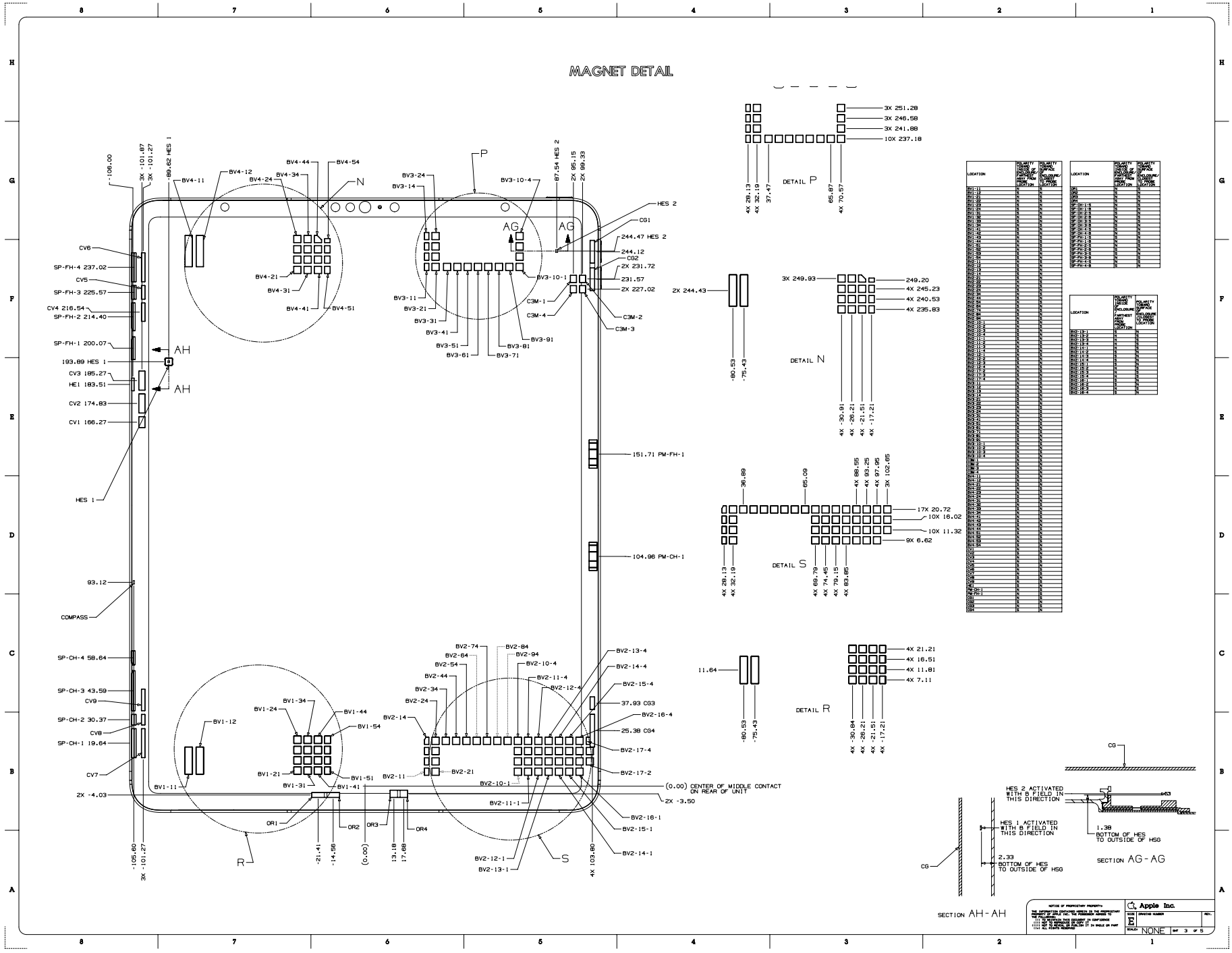

Copyright © 2024 Apple Inc. All Rights Reserved.

58.83 iPad Pro 12.9-inch (6th generation) 4 of 5

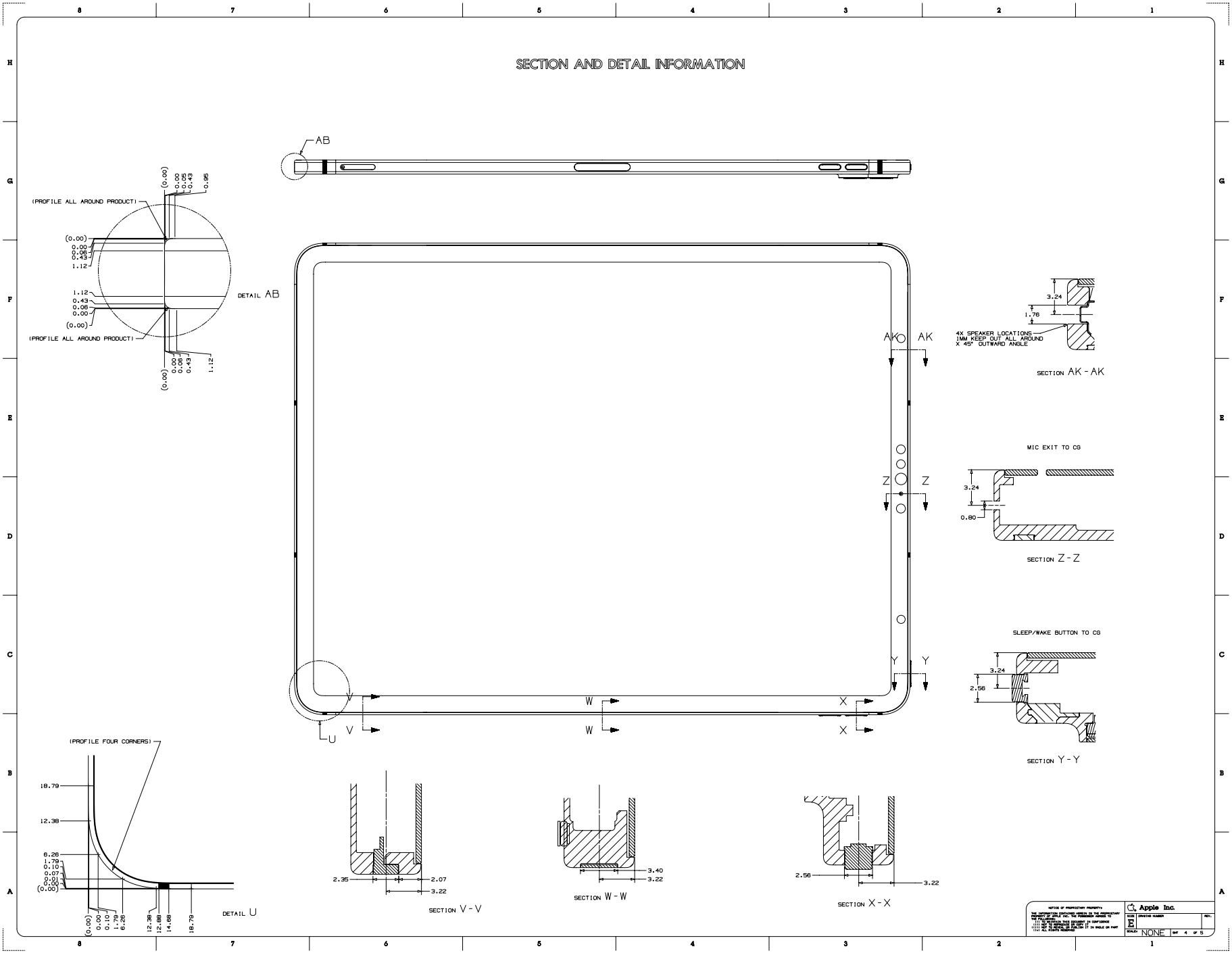

 Copyright © 2024 Apple Inc. All Rights Reserved.

58.84 iPad Pro 12.9-inch (6th generation) 5 of 5

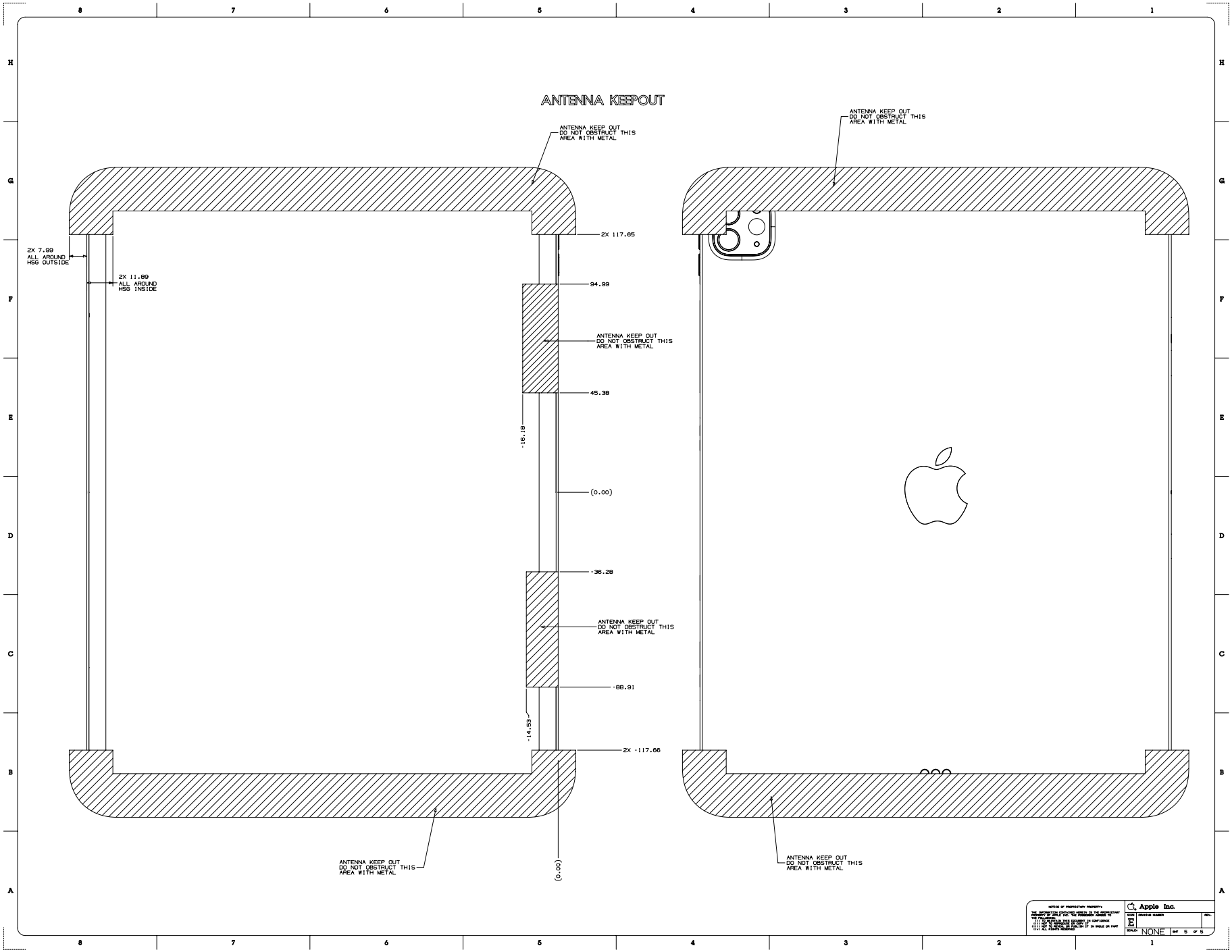

Copyright © 2024 Apple Inc. All Rights Reserved.

58.85 iPad Pro 11-inch (4th generation) 1 of 5

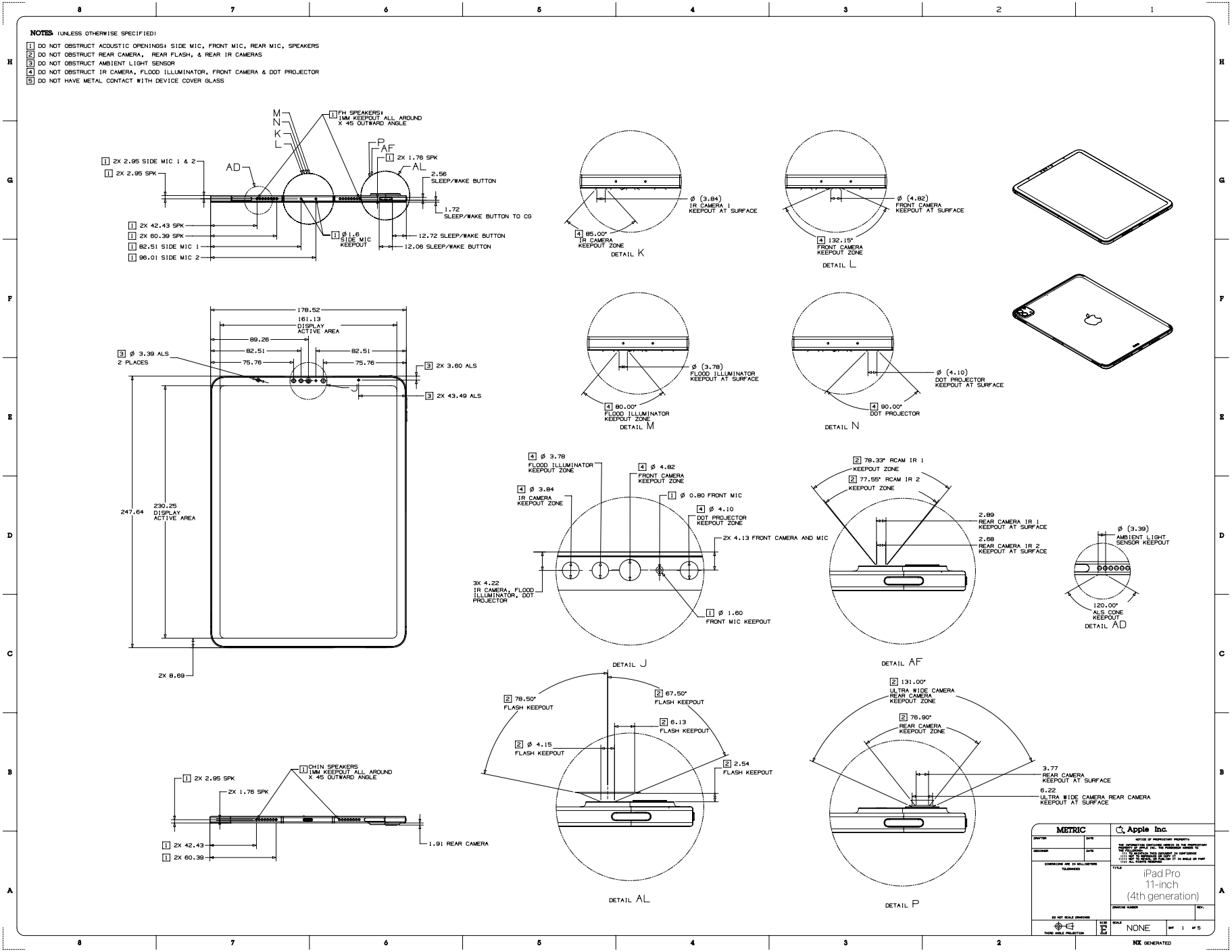

Copyright © 2024 Apple Inc. All Rights Reserved.

58.86 iPad Pro 11-inch (4th generation) 2 of 5

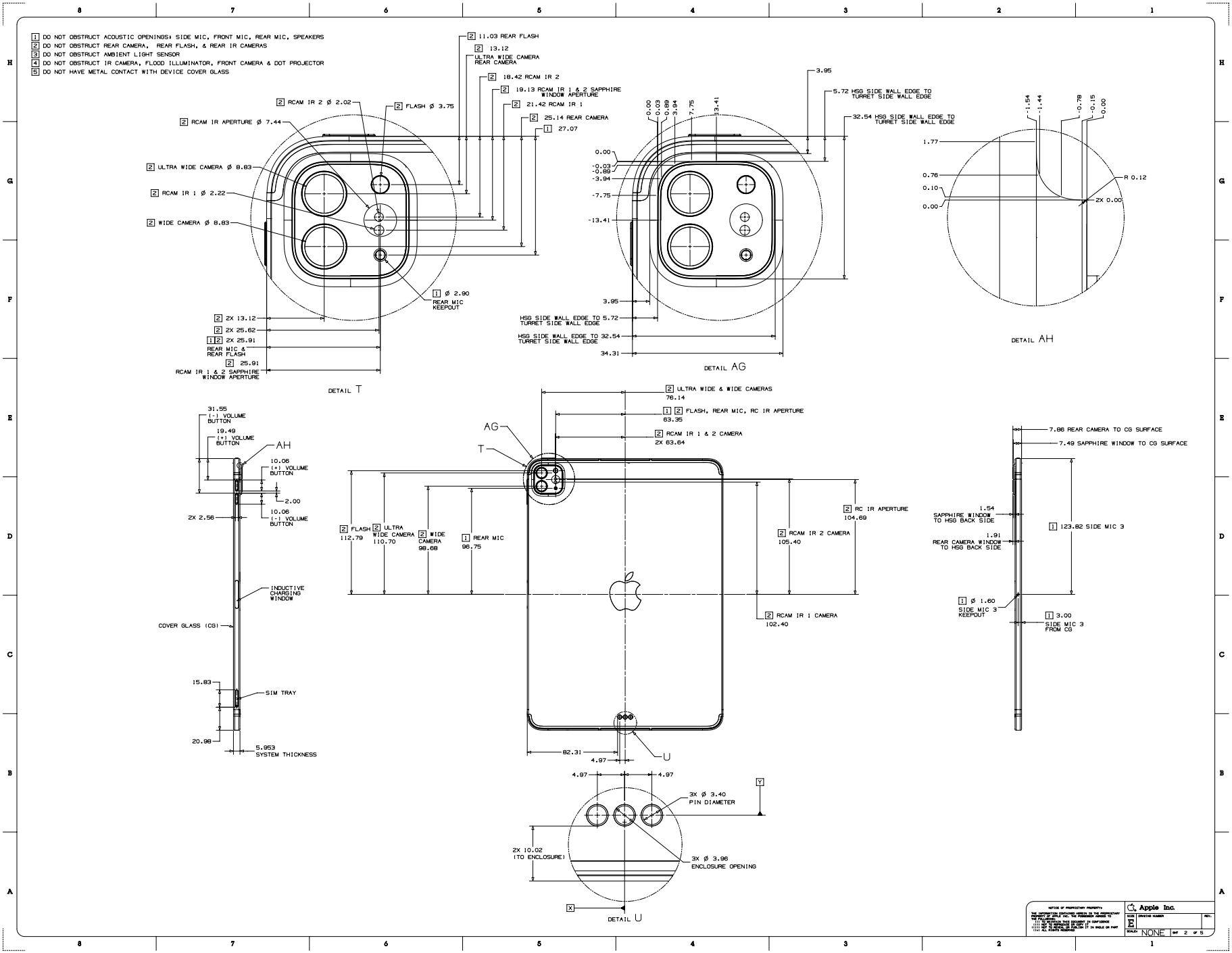

Copyright © 2024 Apple Inc. All Rights Reserved.

58.87 iPad Pro 11-inch (4th generation) 3 of 5

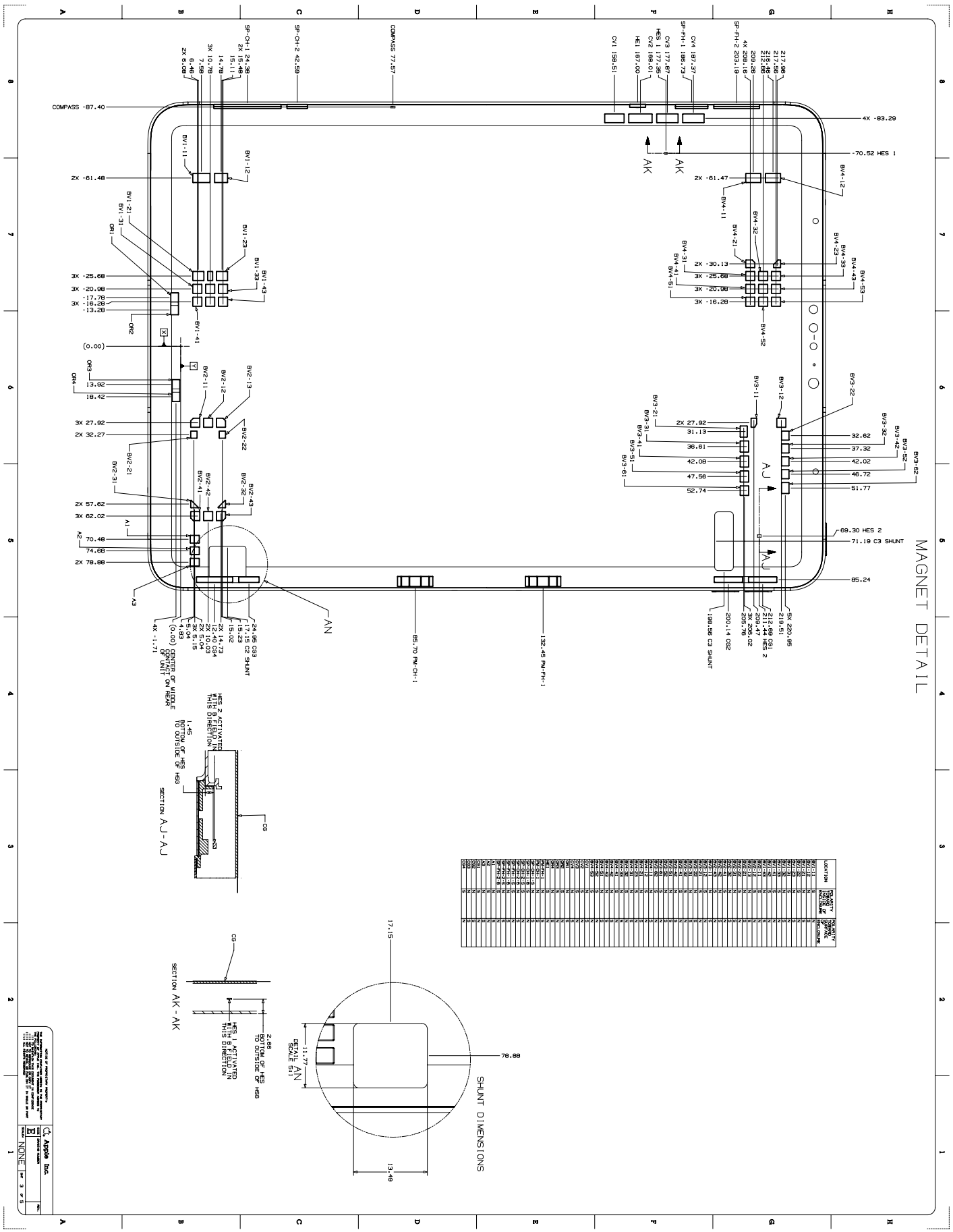

2024-05-13 | Copyright © 2024 Apple Inc. All Rights Reserved.

58.88 iPad Pro 11-inch (4th generation) 4 of 5

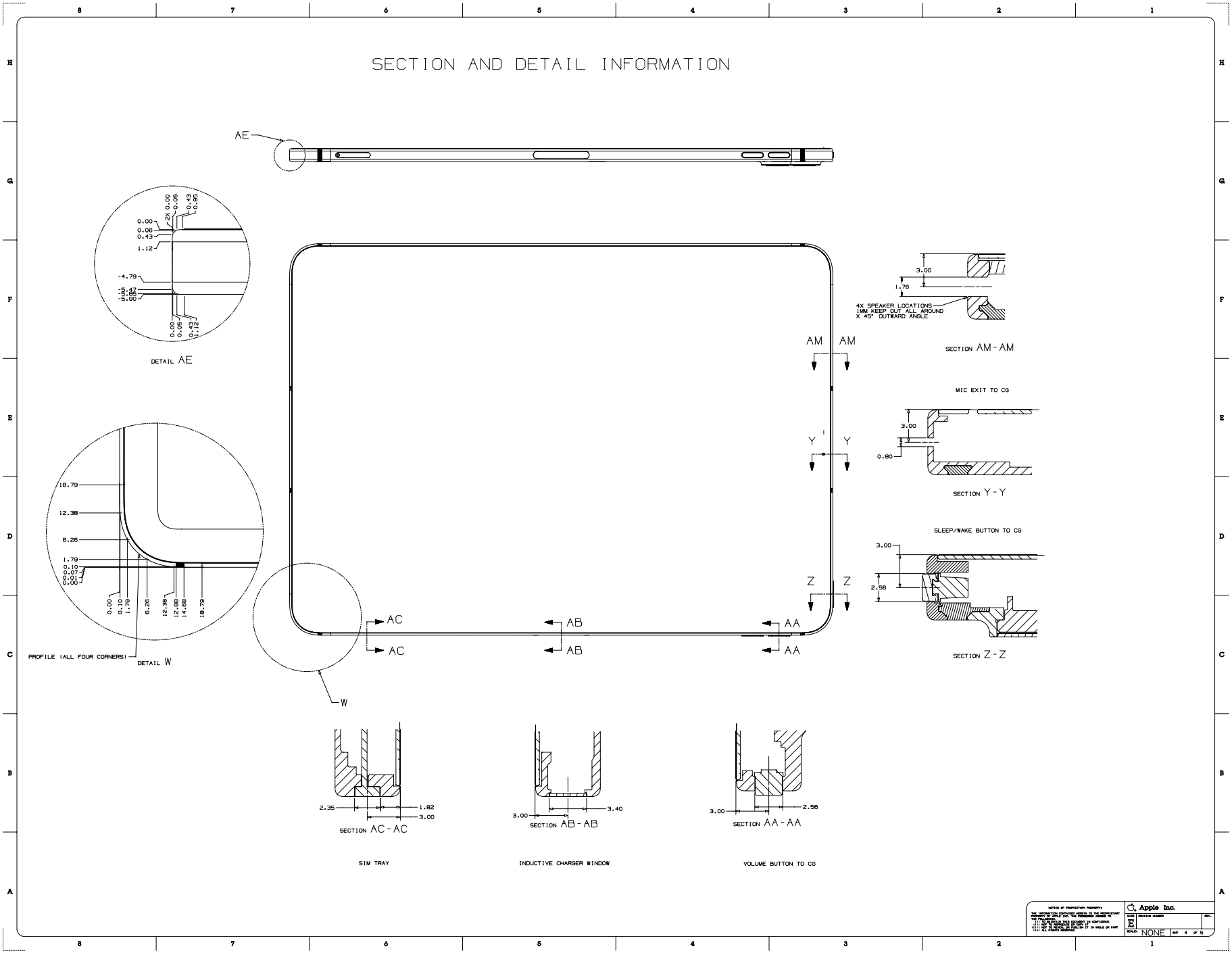

Copyright © 2024 Apple Inc. All Rights Reserved.

58.89 iPad Pro 11-inch (4th generation) 5 of 5

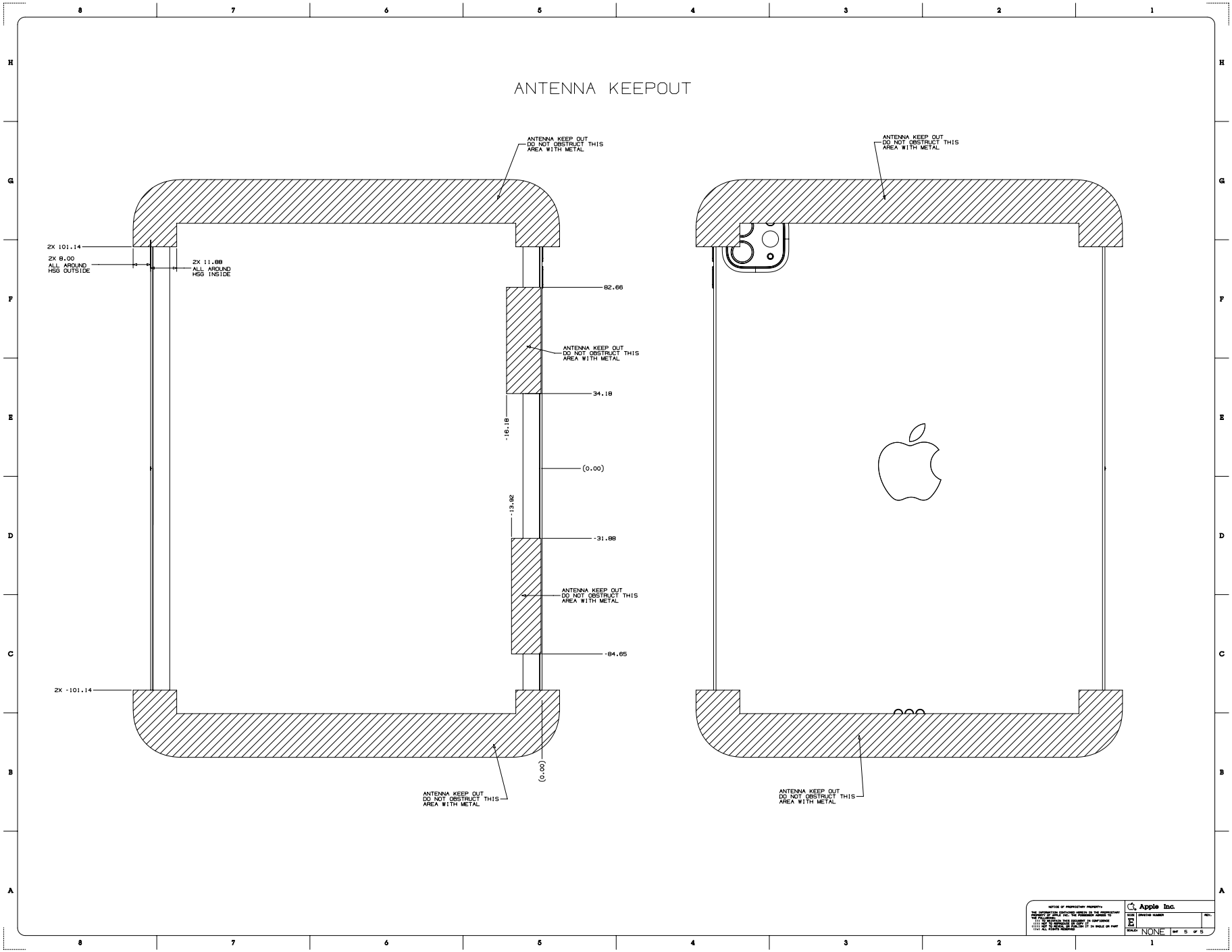

Copyright © 2024 Apple Inc. All Rights Reserved.

58.90 iPad (10th generation) 1 of 6

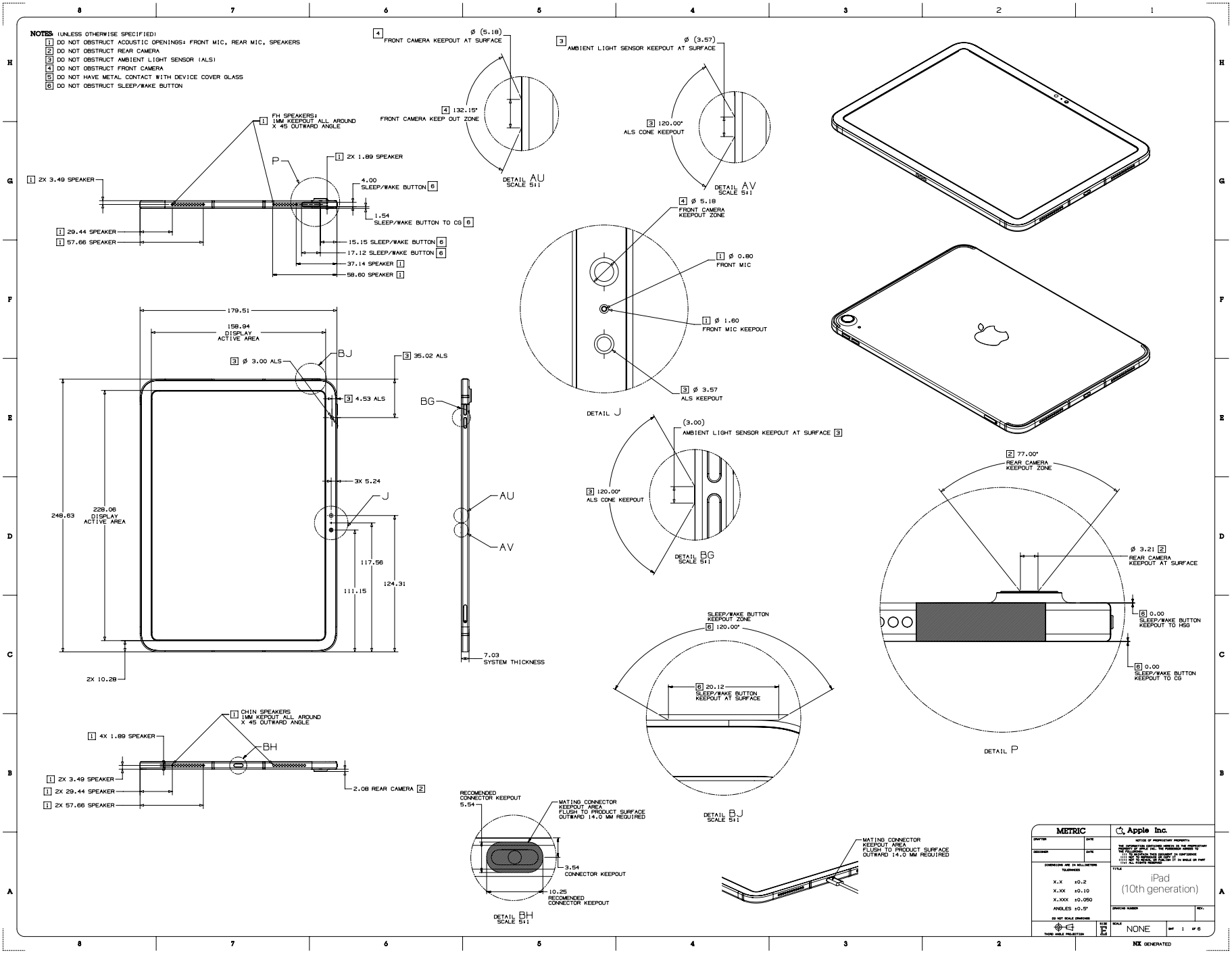

Copyright © 2024 Apple Inc. All Rights Reserved.

58.91 iPad (10th generation) 2 of 6

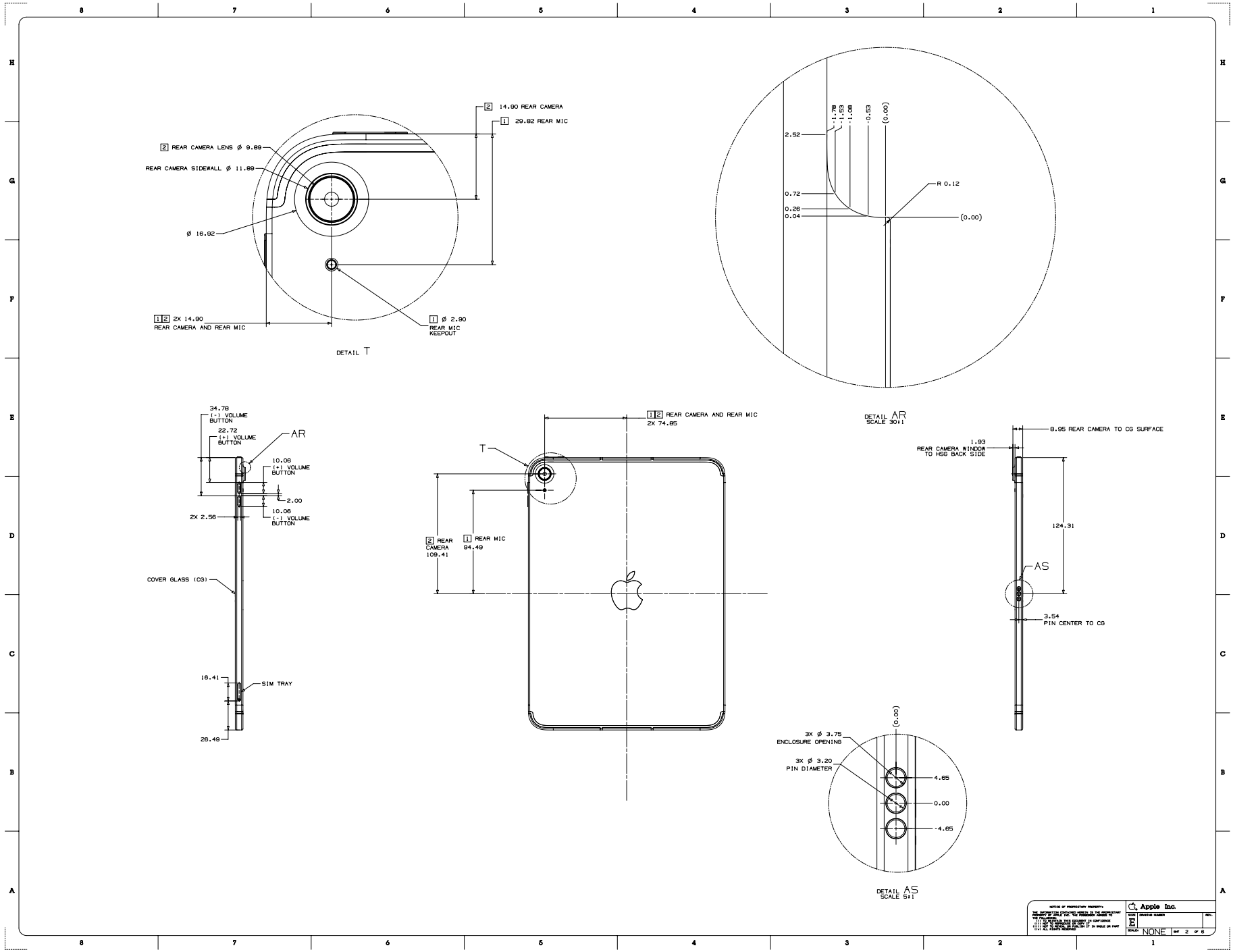

Copyright © 2024 Apple Inc. All Rights Reserved.

58.92 iPad (10th generation) 3 of 6

HALL EFFECT SENSORS AND COMPASS

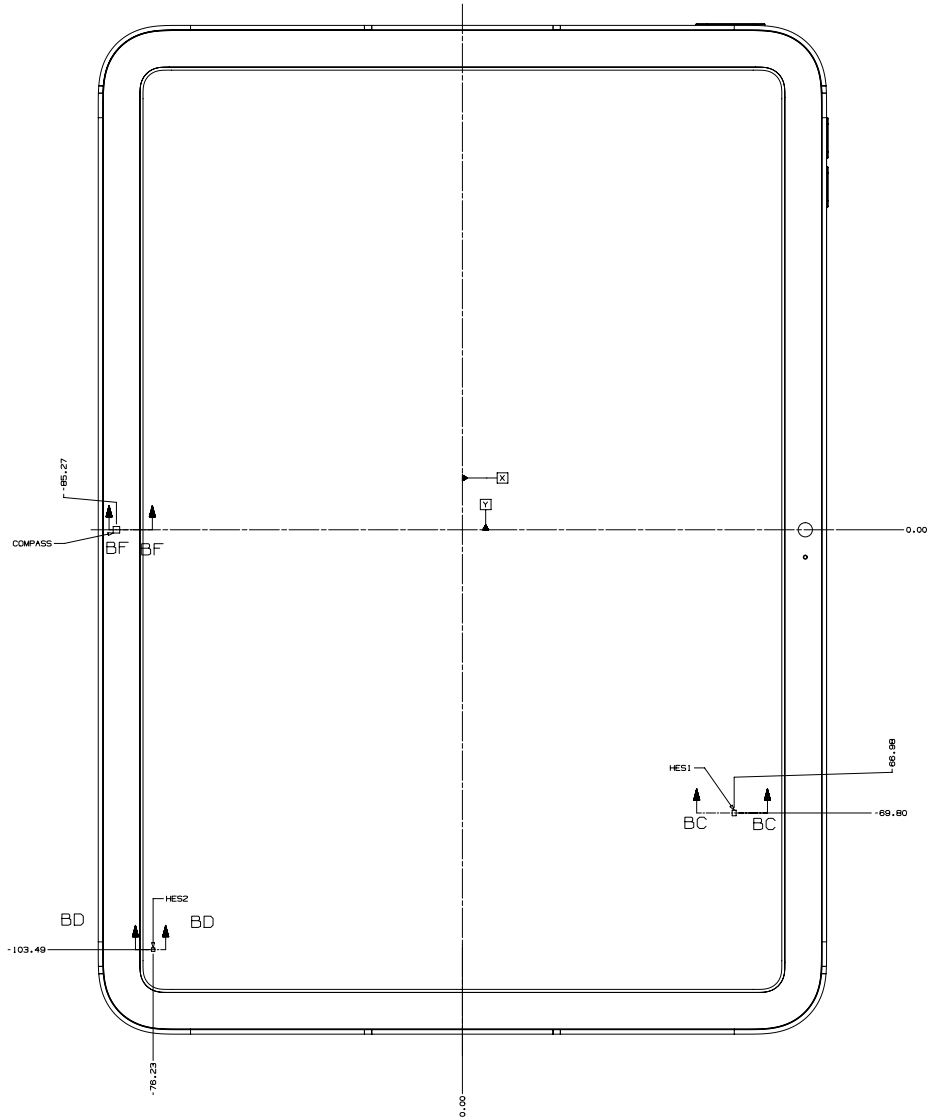

HALL EFFECT SENSOR TABLE

SENSOR	TRIGGERING FIELD (mT)	RELEASE FIELD (mT)
HES1	2.3-3.7	1.5-2.9
HES2	7.4-11.6	6.5-10.7

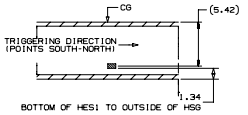

SECTION BC-BC

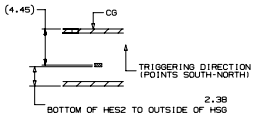

SECTION BD-BD

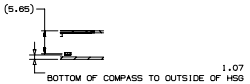

SECTION BF-BF

Apple Inc.

SIZE: E | DRAWING NUMBER | REV:

SCALE: NONE | SHT 3 OF 6

Copyright © 2024 Apple Inc. All Rights Reserved.

58.93 iPad (10th generation) 4 of 6

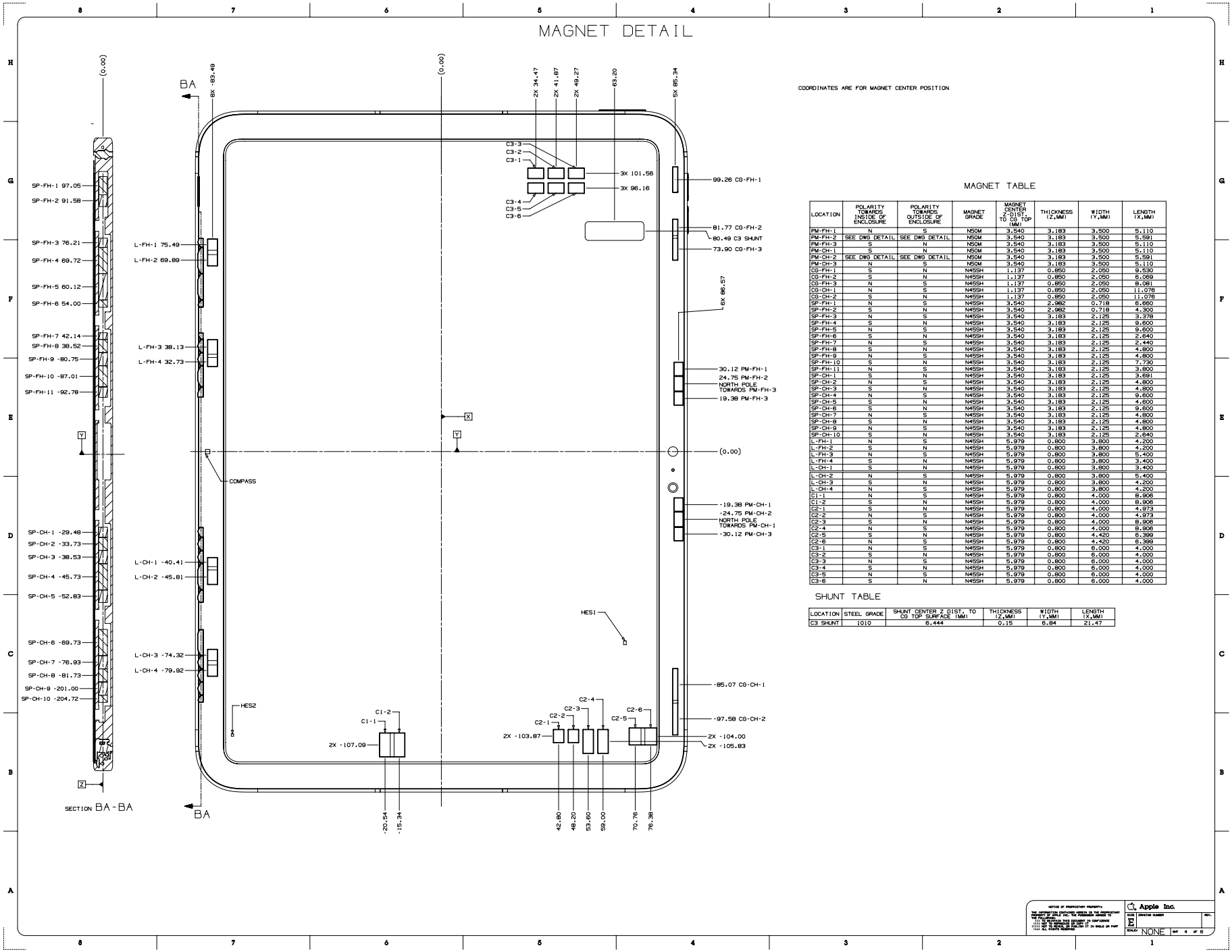

LOCATION	POLARITY TOWARDS INSIDE OF ENCLOSURE	POLARITY TOWARDS OUTSIDE OF ENCLOSURE	MAGNET GRADE	MAGNET CENTER Z DIST. TO CG TOP (MM)	THICKNESS (Z,MM)	WIDTH (Y,MM)	LENGTH (X,MM)
PM-FH-1	N	S	N50M	3.540	3.183	3.500	5.110
PM-FH-2	SEE DWG DETAIL	SEE DWG DETAIL	N50M	3.540	3.183	3.500	5.591
PM-FH-3	S	N	N50M	3.540	3.183	3.500	5.110
PM-CH-1	S	N	N50M	3.540	3.183	3.500	5.110
PM-CH-2	SEE DWG DETAIL	SEE DWG DETAIL	N50M	3.540	3.183	3.500	5.591
PM-CH-3	N	S	N50M	3.540	3.183	3.500	5.110
CG-FH-1	S	N	N45SH	1.137	0.850	2.050	9.530
CG-FH-2	S	N	N45SH	1.137	0.850	2.050	8.069
CG-FH-3	N	S	N45SH	1.137	0.850	2.050	8.081
CG-CH-1	N	S	N45SH	1.137	0.850	2.050	11.076
CG-CH-2	S	N	N45SH	1.137	0.850	2.050	11.076
SP-FH-1	N	S	N45SH	3.540	2.962	0.718	6.880
SP-FH-2	S	N	N45SH	3.540	2.962	0.718	4.300
SP-FH-3	N	S	N45SH	3.540	3.183	2.125	3.378
SP-FH-4	S	N	N45SH	3.540	3.183	2.125	9.600
SP-FH-5	N	S	N45SH	3.540	3.183	2.125	9.600
SP-FH-6	S	N	N45SH	3.540	3.183	2.125	2.640
SP-FH-7	N	S	N45SH	3.540	3.183	2.125	2.440
SP-FH-8	S	N	N45SH	3.540	3.183	2.125	4.800
SP-FH-9	N	S	N45SH	3.540	3.183	2.125	4.800
SP-FH-10	S	N	N45SH	3.540	3.183	2.125	7.730
SP-FH-11	N	S	N45SH	3.540	3.183	2.125	3.800
SP-CH-1	S	N	N45SH	3.540	3.183	2.125	3.691
SP-CH-2	N	S	N45SH	3.540	3.183	2.125	4.800
SP-CH-3	S	N	N45SH	3.540	3.183	2.125	4.800
SP-CH-4	N	S	N45SH	3.540	3.183	2.125	9.600
SP-CH-5	S	N	N45SH	3.540	3.183	2.125	4.800
SP-CH-6	S	N	N45SH	3.540	3.183	2.125	9.600
SP-CH-7	N	S	N45SH	3.540	3.183	2.125	4.800
SP-CH-8	S	N	N45SH	3.540	3.183	2.125	4.800
SP-CH-9	N	S	N45SH	3.540	3.183	2.125	4.800
SP-CH-10	S	N	N45SH	3.540	3.183	2.125	2.640
L-FH-1	N	S	N45SH	5.979	0.800	3.800	4.200
L-FH-2	S	N	N45SH	5.979	0.800	3.800	4.200
L-FH-3	N	S	N45SH	5.979	0.800	3.800	5.400
L-FH-4	S	N	N45SH	5.979	0.800	3.800	3.400
L-CH-1	S	N	N45SH	5.979	0.800	3.800	3.400
L-CH-2	N	S	N45SH	5.979	0.800	3.800	5.400
L-CH-3	S	N	N45SH	5.979	0.800	3.800	4.200
L-CH-4	N	S	N45SH	5.979	0.800	3.800	4.200
C1-1	N	S	N45SH	5.979	0.800	4.000	8.906
C1-2	S	N	N45SH	5.979	0.800	4.000	8.906
C2-1	S	N	N45SH	5.979	0.800	4.000	4.973
C2-2	N	S	N45SH	5.979	0.800	4.000	4.973
C2-3	S	N	N45SH	5.979	0.800	4.000	8.906
C2-4	N	S	N45SH	5.979	0.800	4.000	8.906
C2-5	S	N	N45SH	5.979	0.800	4.420	6.399
C2-6	N	S	N45SH	5.979	0.800	4.420	6.399
C3-1	N	S	N45SH	5.979	0.800	6.000	4.000
C3-2	S	N	N45SH	5.979	0.800	6.000	4.000
C3-3	N	S	N45SH	5.979	0.800	6.000	4.000
C3-4	S	N	N45SH	5.979	0.800	6.000	4.000
C3-5	N	S	N45SH	5.979	0.800	6.000	4.000
C3-6	S	N	N45SH	5.979	0.800	6.000	4.000

LOCATION	STEEL GRADE	SHUNT CENTER Z DIST. TO CG TOP SURFACE (MM)	THICKNESS (Z,MM)	WIDTH (Y,MM)	LENGTH (X,MM)
C3 SHUNT	1010	6.444	0.15	6.84	21.47

Copyright © 2024 Apple Inc. All Rights Reserved.

58.94 iPad (10th generation) 5 of 6

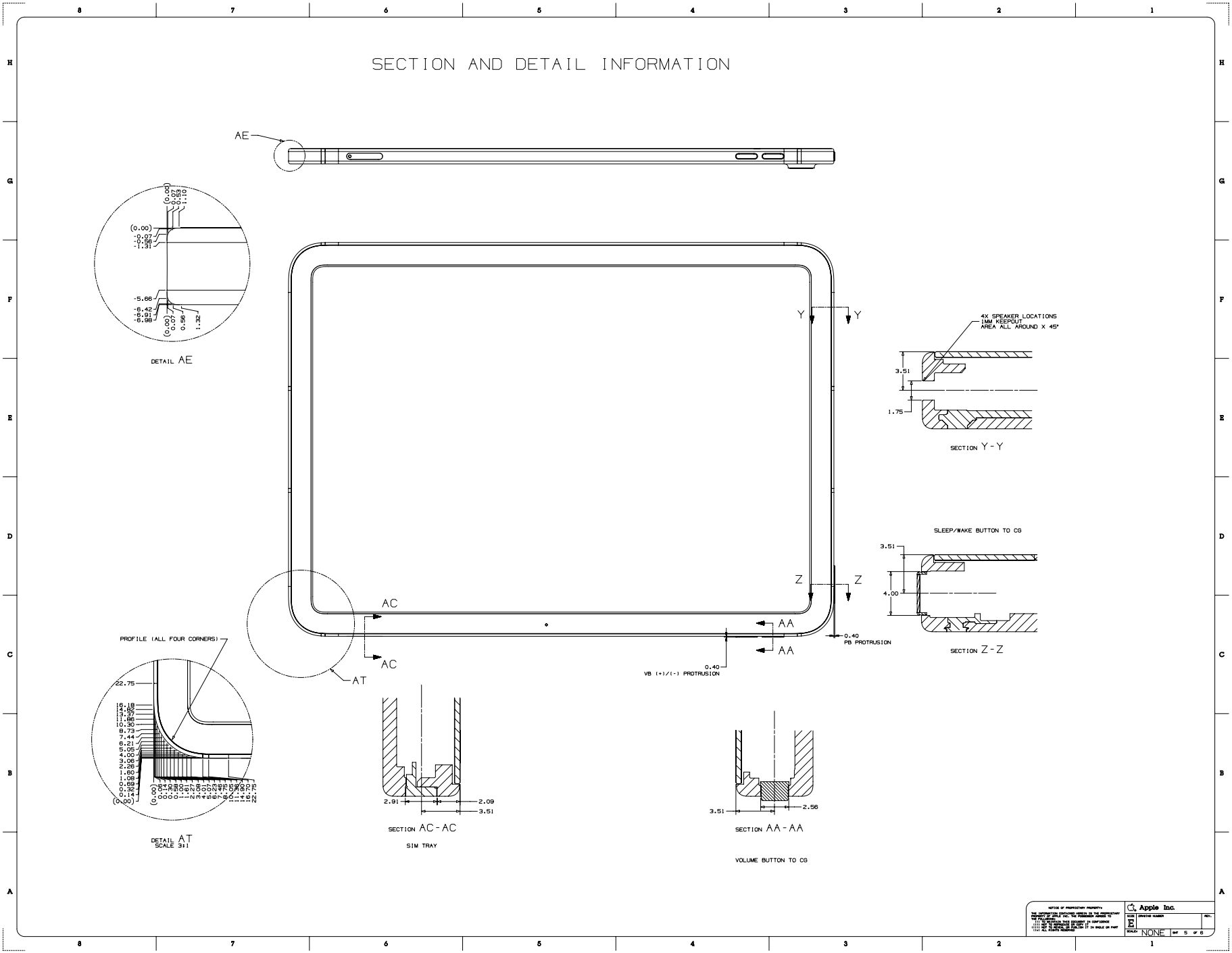

 Copyright © 2024 Apple Inc. All Rights Reserved.

58.95 iPad (10th generation) 6 of 6

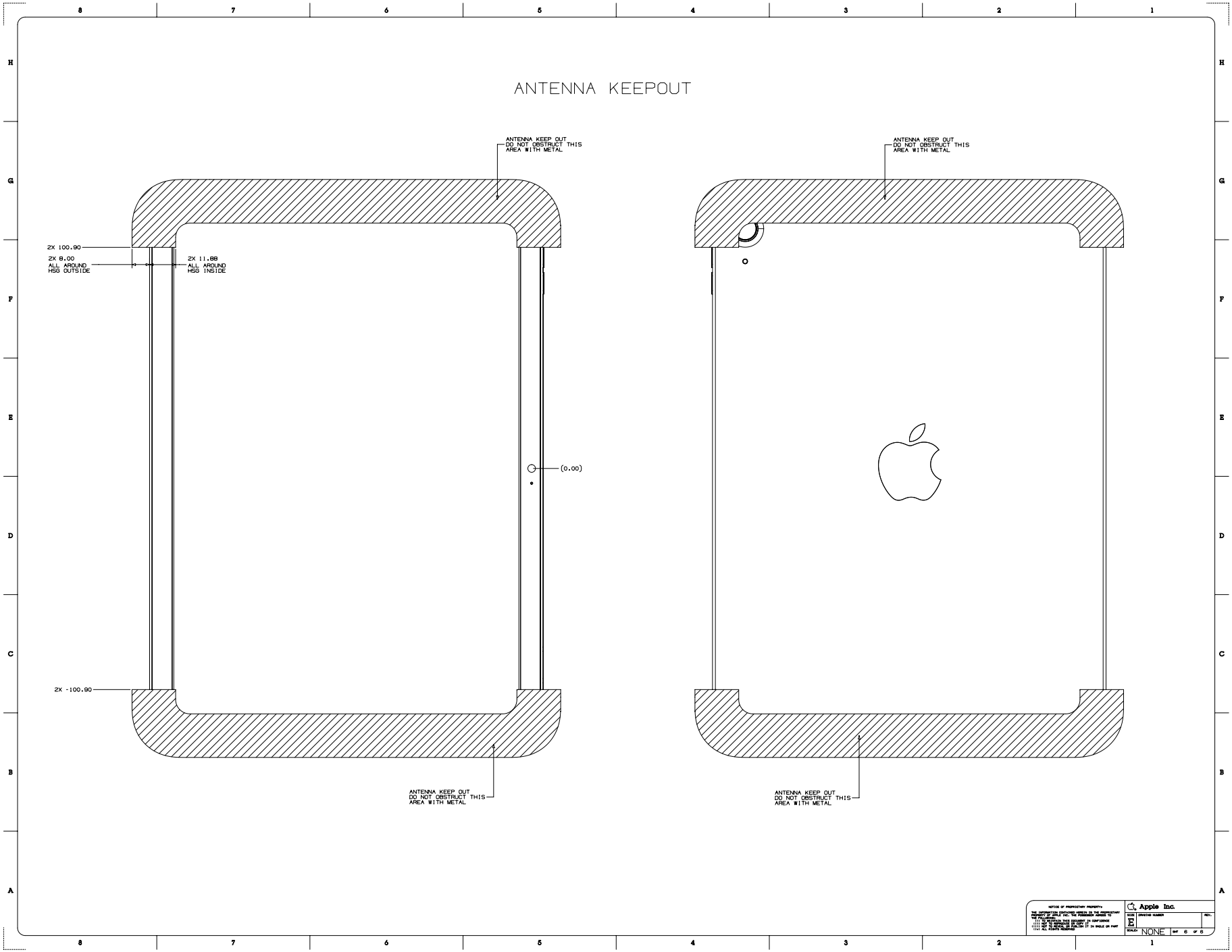

Copyright © 2024 Apple Inc. All Rights Reserved.

58.96 iPad Air (5th generation) and iPad Air (4th generation) 1 of 5

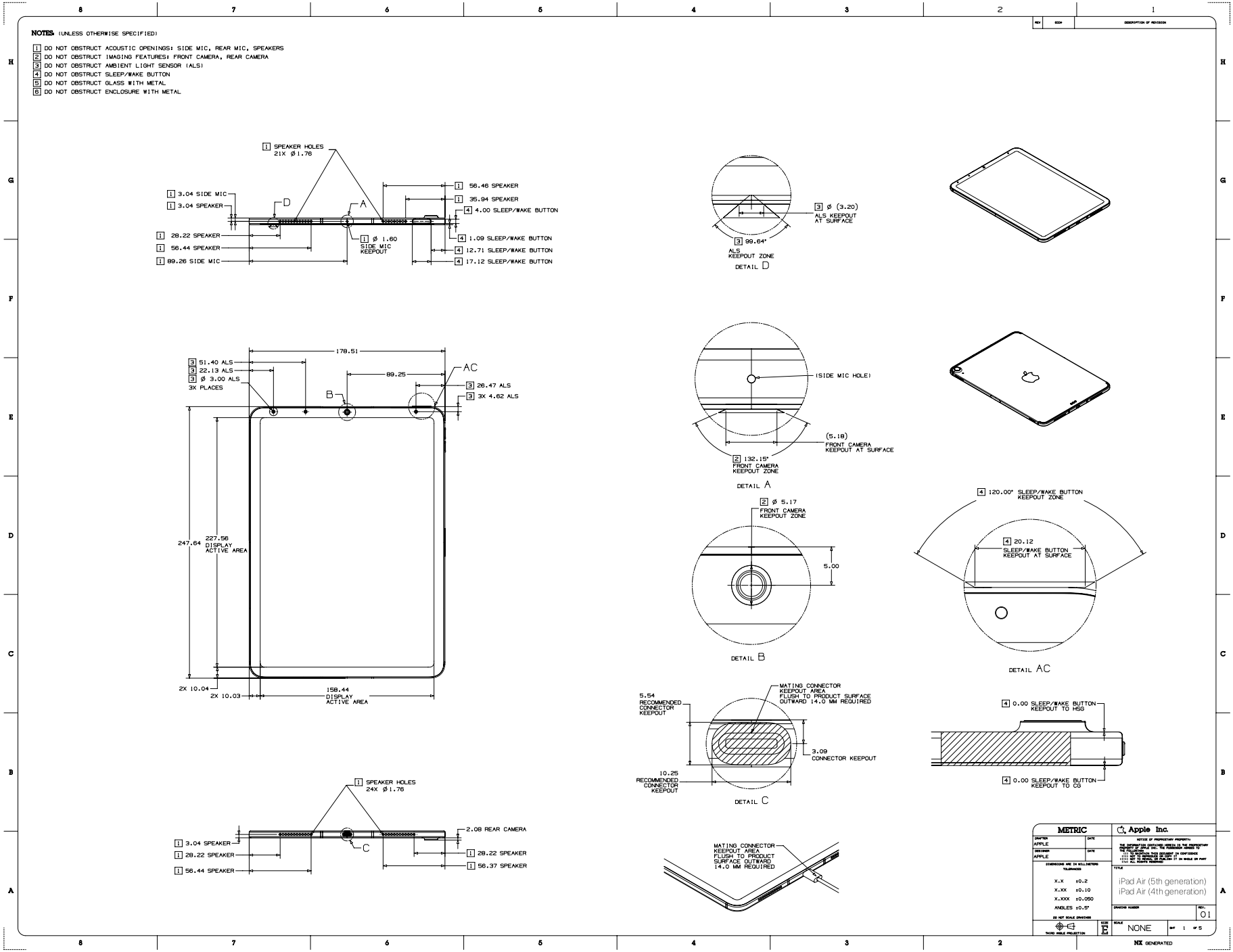

Copyright © 2024 Apple Inc. All Rights Reserved.

58.97 iPad Air (5th generation) and iPad Air (4th generation) 2 of 5

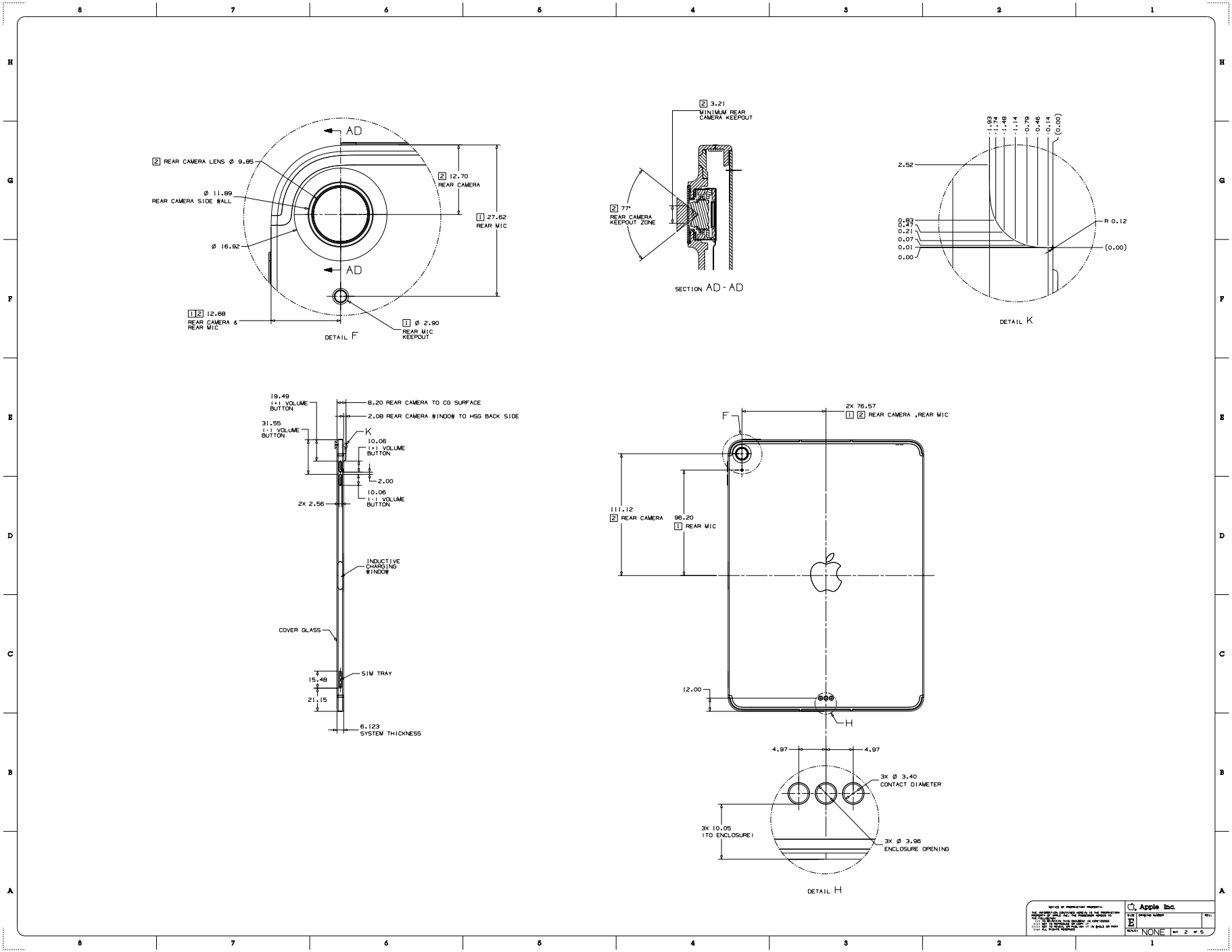

58.98 iPad Air (5th generation) and iPad Air (4th generation) 3 of 5

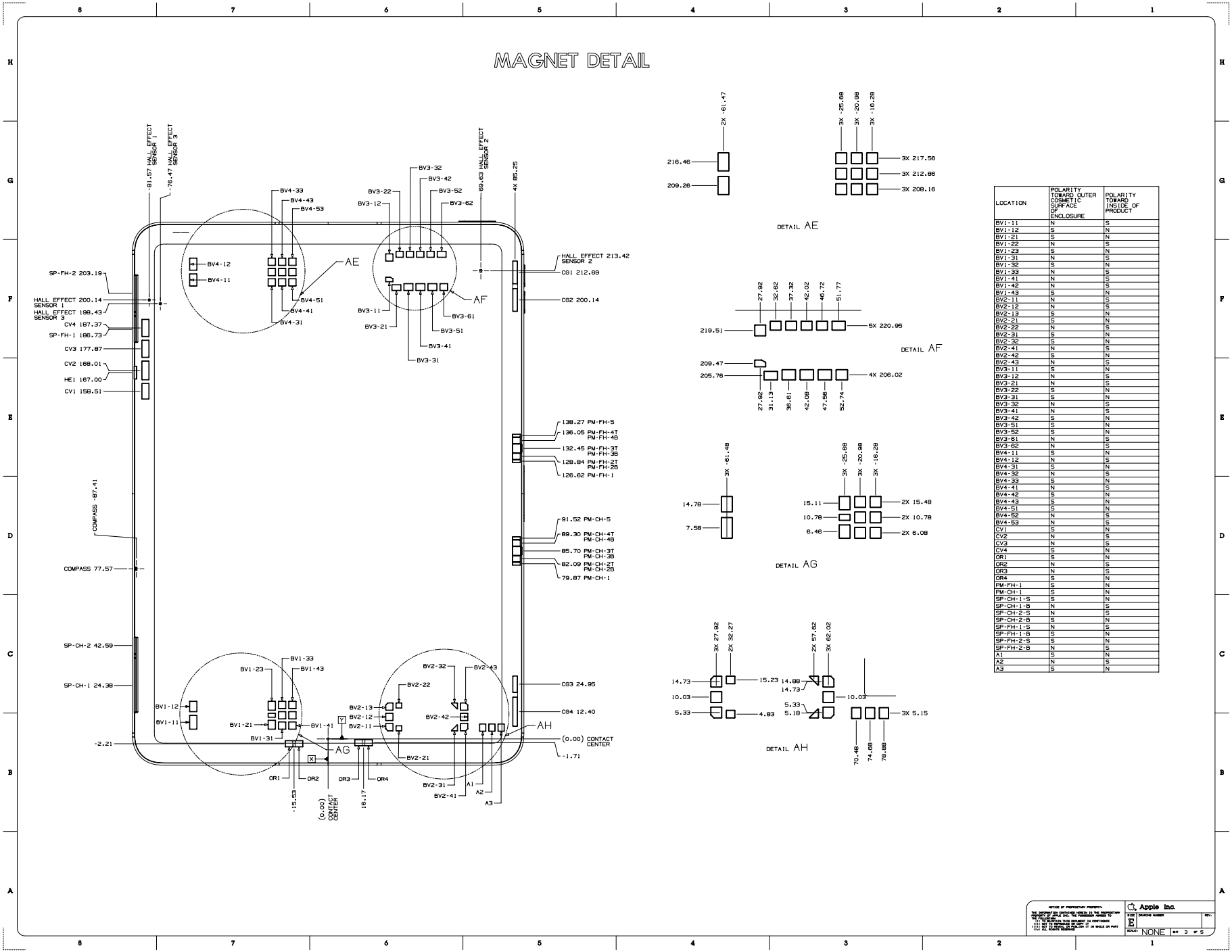

LOCATION	POLARITY TOWARD OUTER COSMETIC SURFACE OF ENCLOSURE	POLARITY TOWARD INSIDE OF PRODUCT
BV1-11	N	S
BV1-12	S	N
BV1-21	S	N
BV1-22	N	S
BV1-23	S	N
BV1-31	N	S
BV1-32	S	N
BV1-33	N	S
BV1-41	N	S
BV1-42	N	S
BV1-43	S	N
BV2-11	N	S
BV2-12	N	S
BV2-13	S	N
BV2-21	S	N
BV2-22	N	S
BV2-31	S	N
BV2-32	S	N
BV2-41	N	S
BV2-42	S	N
BV2-43	N	S
BV3-11	S	N
BV3-12	N	S
BV3-21	N	S
BV3-22	S	N
BV3-31	S	N
BV3-32	N	S
BV3-41	N	S
BV3-42	S	N
BV3-51	S	N
BV3-52	S	N
BV3-61	N	S
BV3-62	N	S
BV4-11	S	N
BV4-12	N	S
BV4-31	S	N
BV4-32	N	S
BV4-33	S	N
BV4-41	N	S
BV4-42	S	N
BV4-43	S	N
BV4-51	S	N
BV4-52	N	S
BV4-53	N	S
CV1	S	N
CV2	N	S
CV3	N	S
CV4	S	N
OR1	S	N
OR2	N	S
OR3	N	S
OR4	S	N
PM-FH-1	S	N
PM-CH-1	S	N
SP-CH-1-S	S	N
SP-CH-1-B	N	S
SP-CH-2-S	N	S
SP-CH-2-B	S	N
SP-FH-1-S	N	S
SP-FH-1-B	S	N
SP-FH-2-S	S	N
SP-FH-2-B	N	S
A1	S	N
A2	N	S
A3	S	N

Copyright © 2024 Apple Inc. All Rights Reserved.

58.99 iPad Air (5th generation) and iPad Air (4th generation) 4 of 5

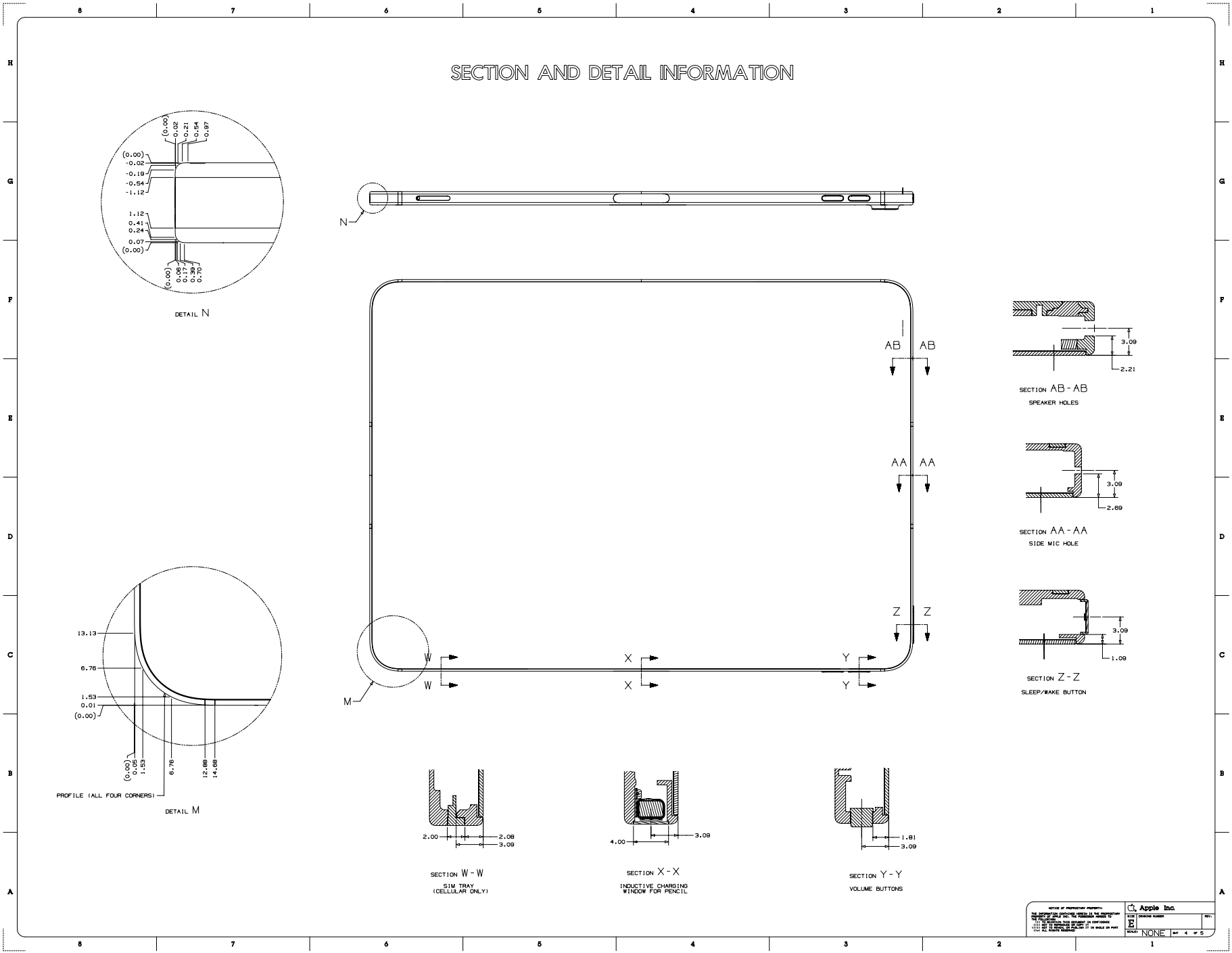

Copyright © 2024 Apple Inc. All Rights Reserved.

58.100 iPad Air (5th generation) and iPad Air (4th generation) 5 of 5

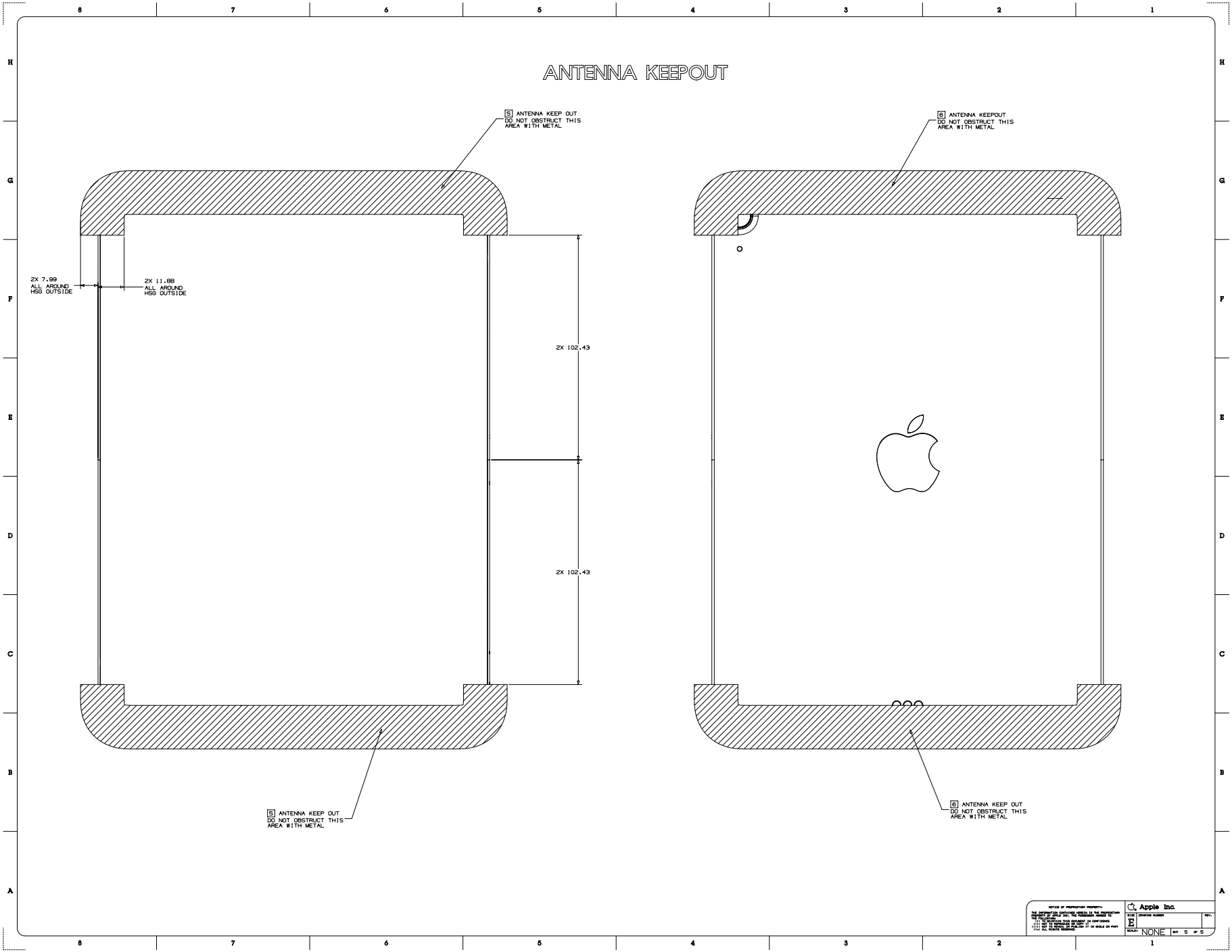

Copyright © 2024 Apple Inc. All Rights Reserved.

58.101 iPad mini (6th generation) 1 of 6

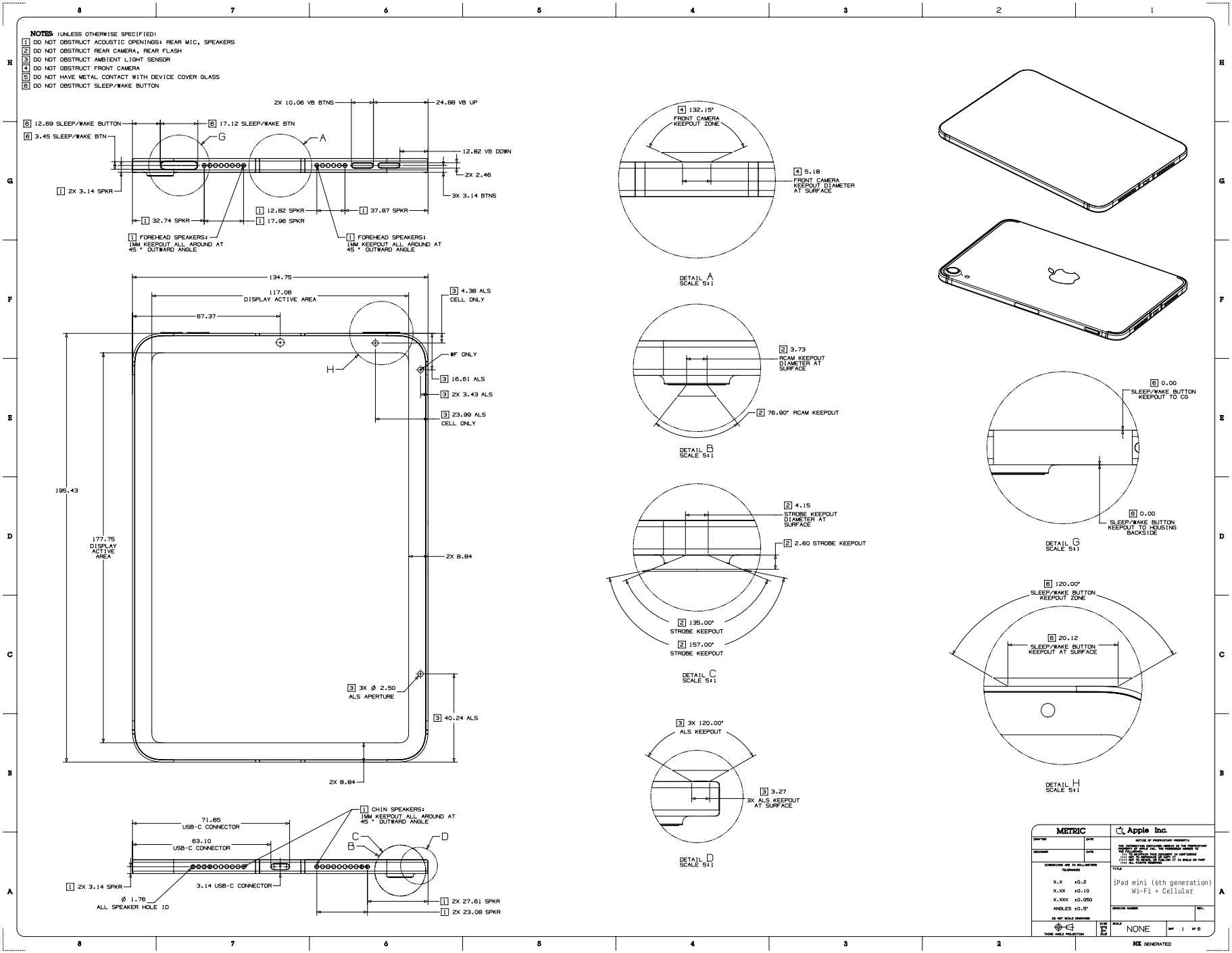

Copyright © 2024 Apple Inc. All Rights Reserved.

58.102 iPad mini (6th generation) 2 of 6

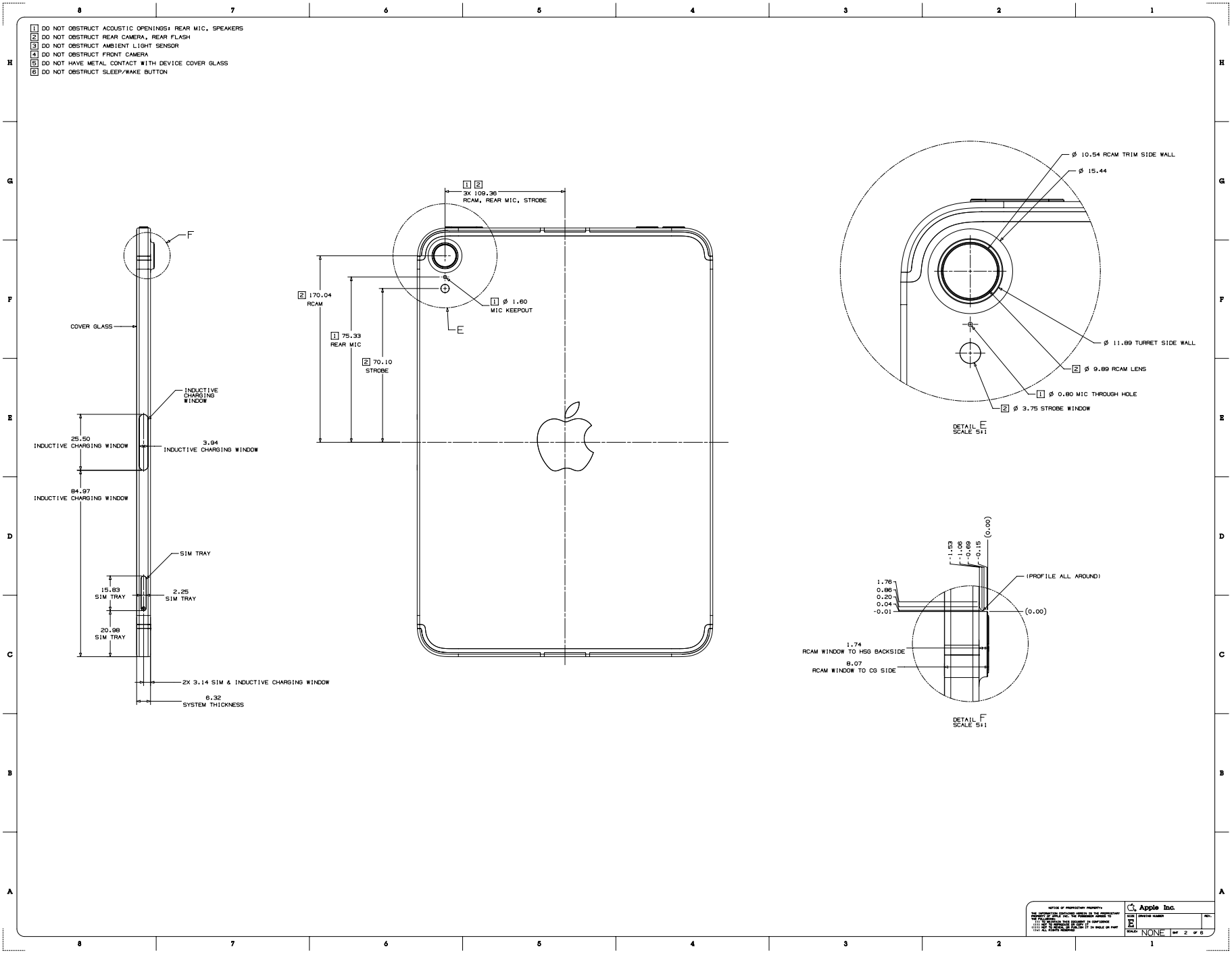

 Copyright © 2024 Apple Inc. All Rights Reserved.

58.103 iPad mini (6th generation) 3 of 6

MAGNET, HES, COMPASS DETAIL

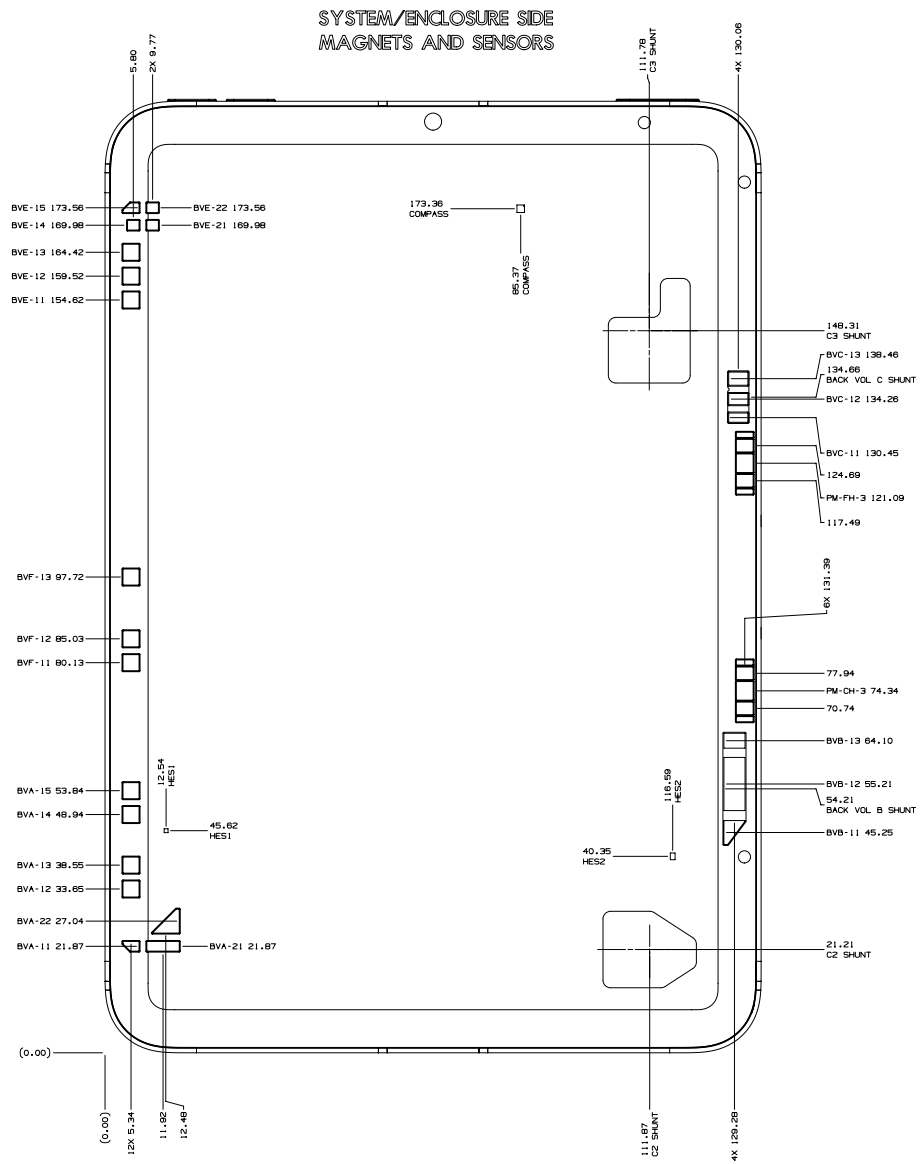

LOCATION	POLARITY TOWARD SURFACE OF ENCLOSURE
PM-FH-3	S
PM-CH-3	S
BVA-11	N
BVA-12	N
BVA-13	S
BVA-14	N
BVA-15	S
BVA-21	S
BVA-22	N
BVB-11	N
BVB-12	S
BVB-13	N
BVC-11	S
BVC-12	N
BVC-13	S
BVE-11	S
BVE-12	N
BVE-13	S
BVE-14	N
BVE-15	S
BVE-21	S
BVE-22	N
BVF-11	N
BVF-12	S
BVF-13	N

Apple Inc.

SIZE E DRAWING NUMBER REV.

SCALE: NONE SHT 3 OF 6

Copyright © 2024 Apple Inc. All Rights Reserved.

58.104 iPad mini (6th generation) 4 of 6

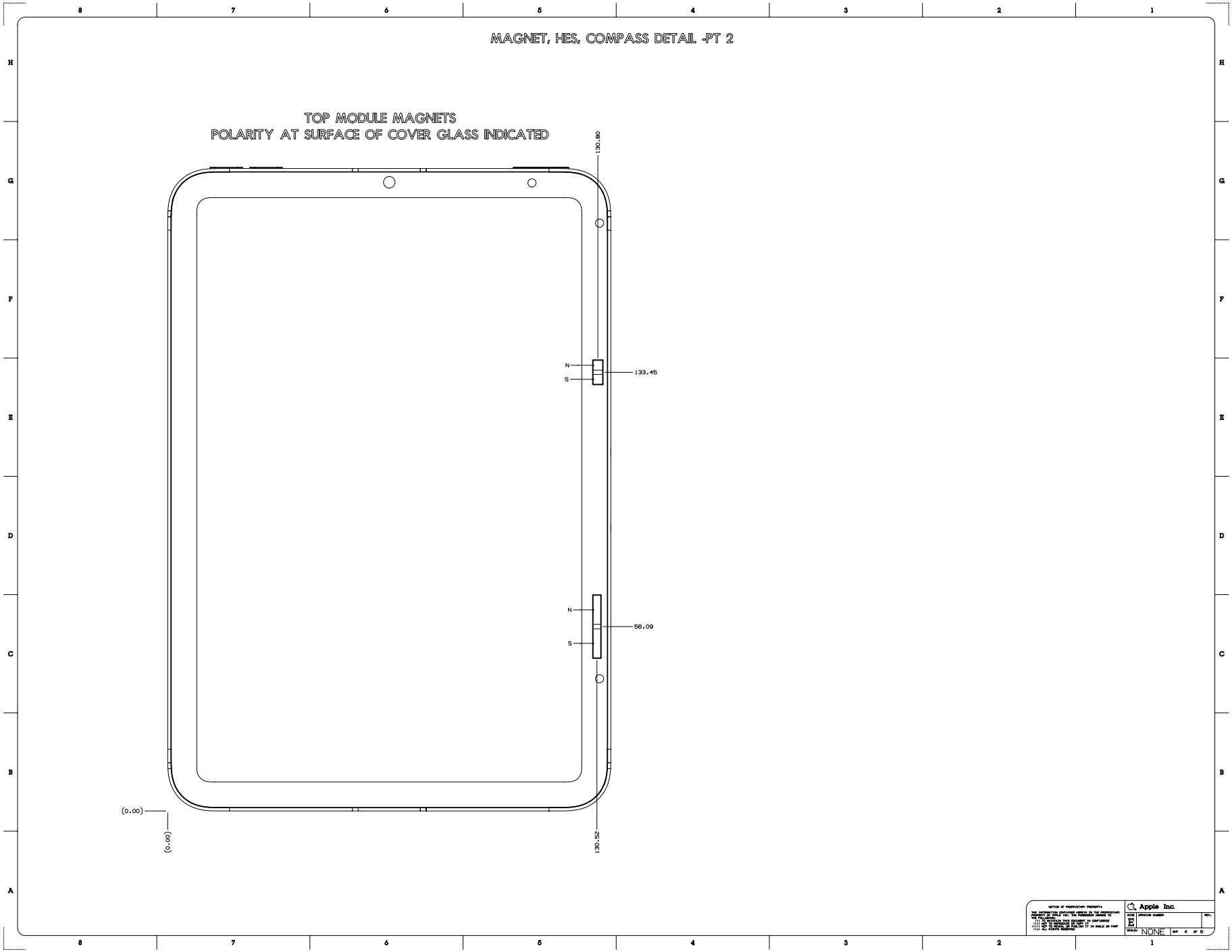

Copyright © 2024 Apple Inc. All Rights Reserved.

58.105 iPad mini (6th generation) 5 of 6

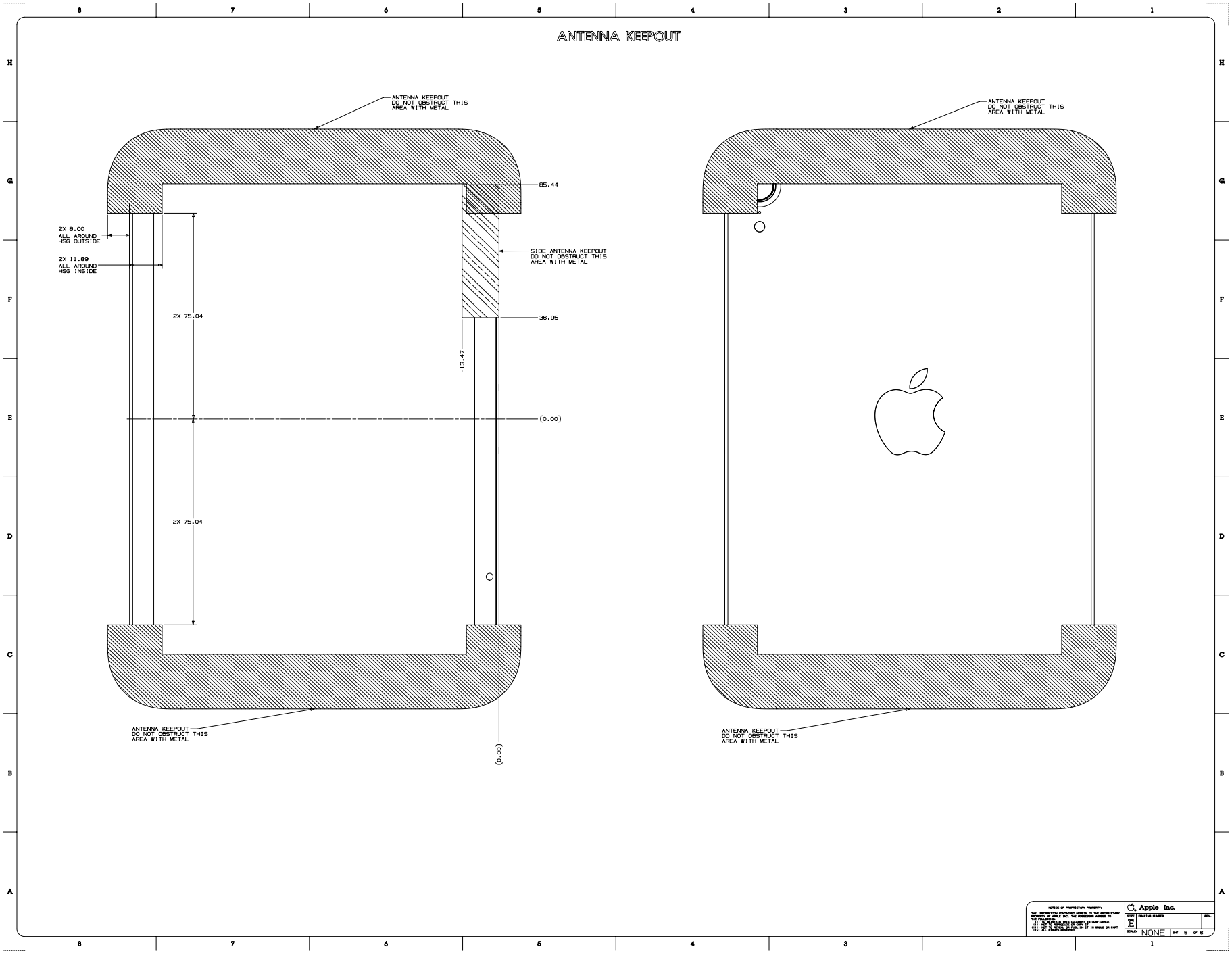

Copyright © 2024 Apple Inc. All Rights Reserved.

58.106 iPad mini (6th generation) 6 of 6

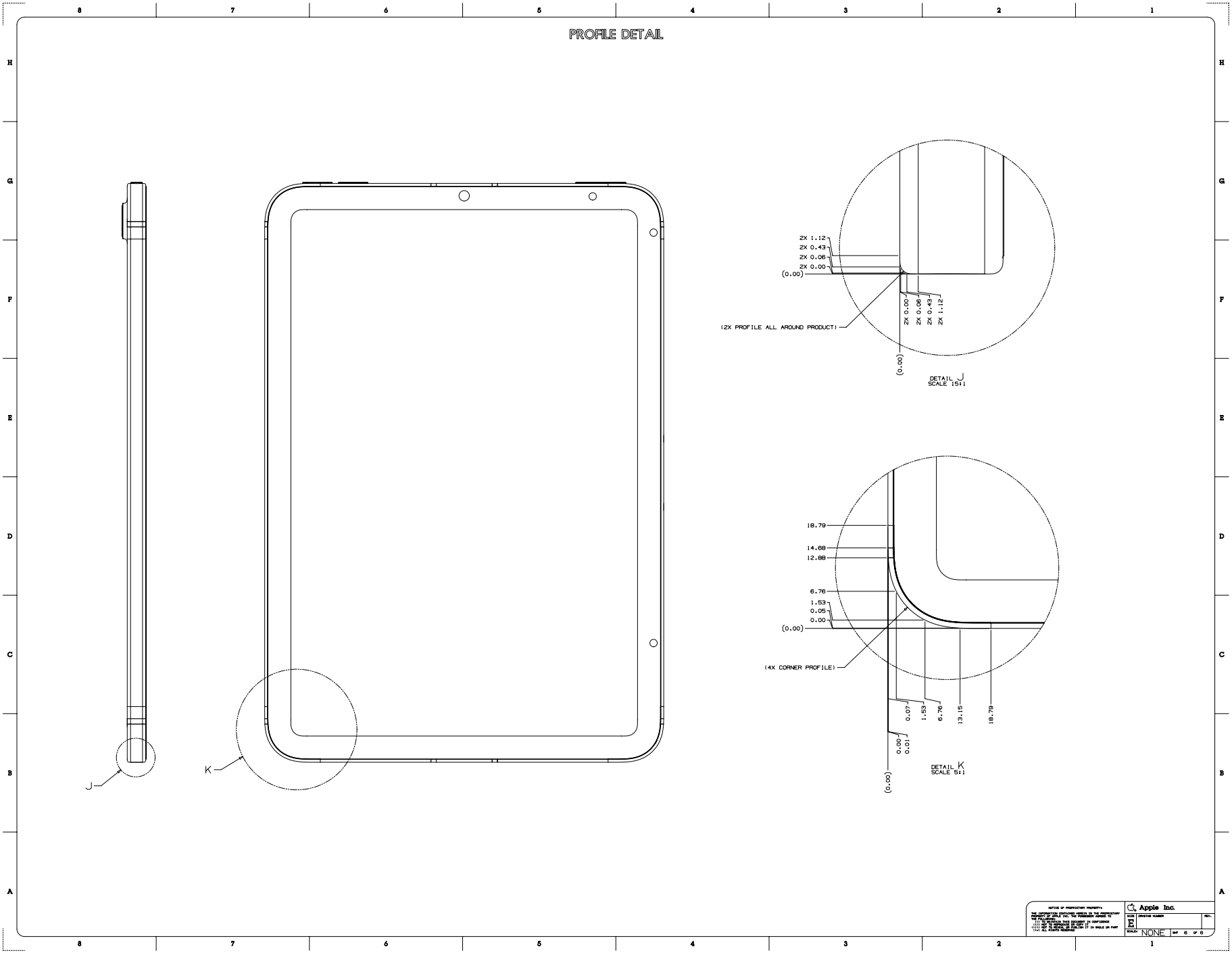

Copyright © 2024 Apple Inc. All Rights Reserved.

58.107 iPad (9th generation), iPad (8th generation) and iPad (7th generation) 1 of 4

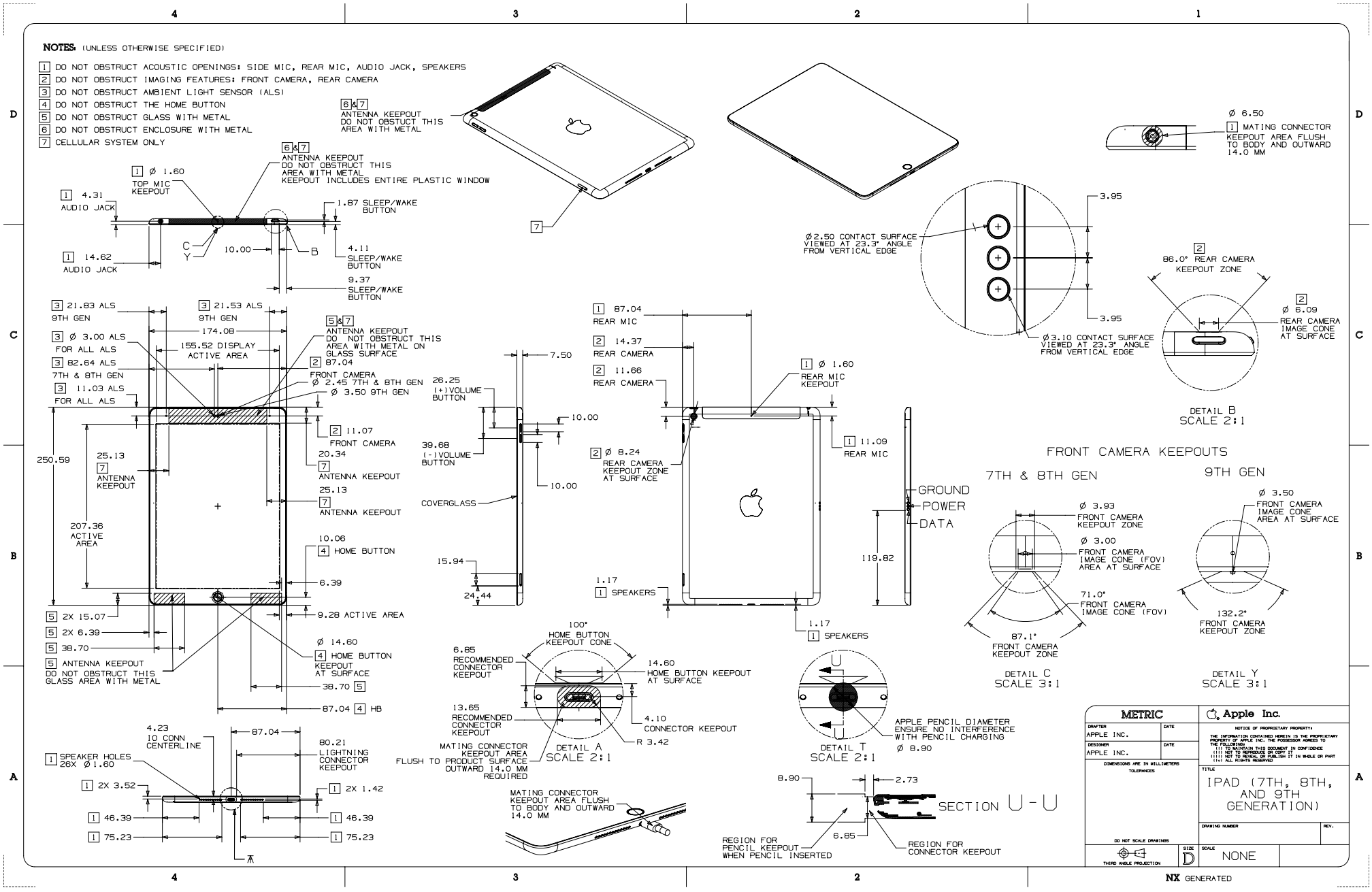

Copyright © 2024 Apple Inc. All Rights Reserved.

58.108 iPad (9th generation), iPad (8th generation) and iPad (7th generation) 2 of 4

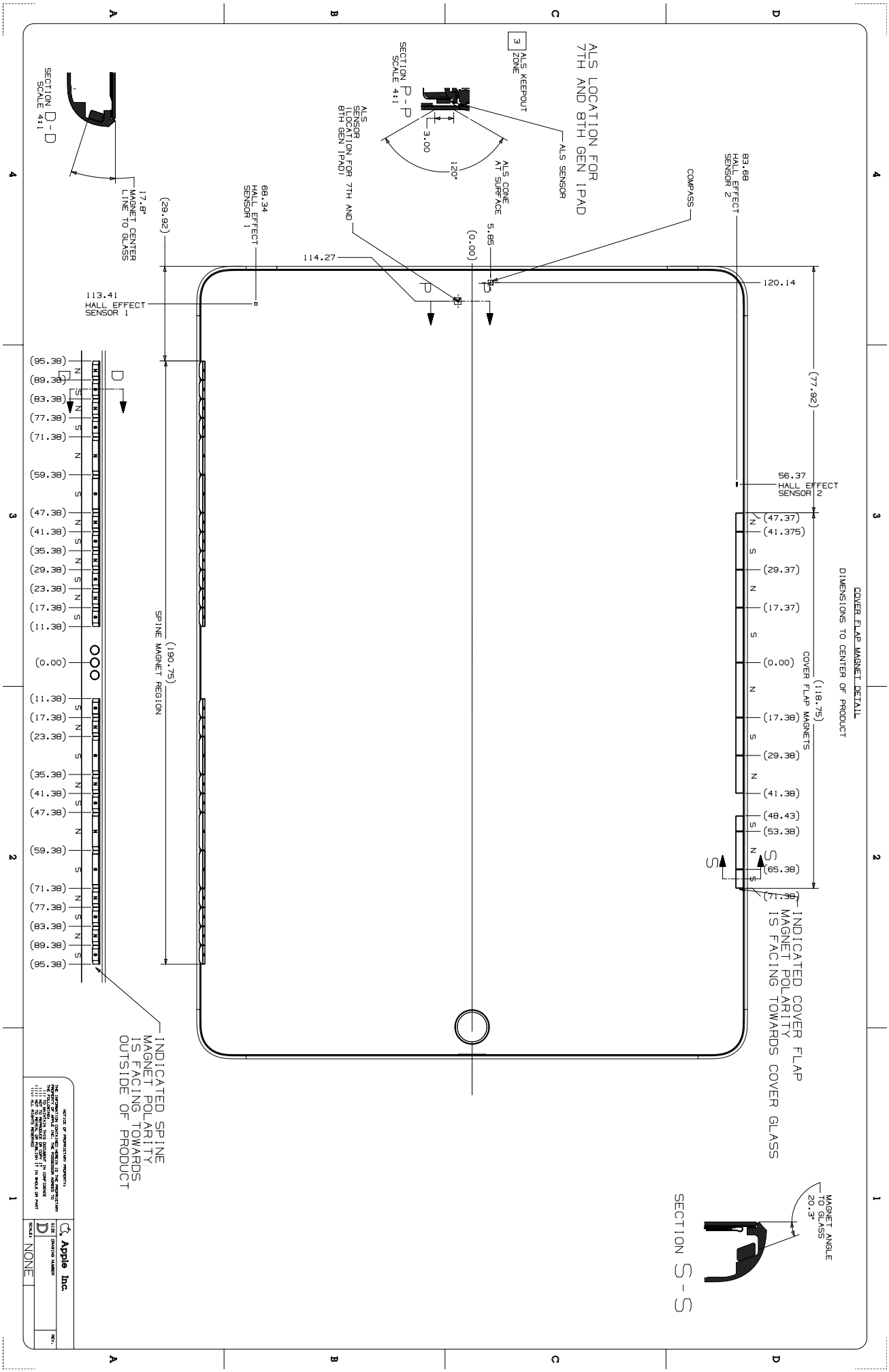

58.109 iPad (9th generation), iPad (8th generation) and iPad (7th generation) 3 of 4

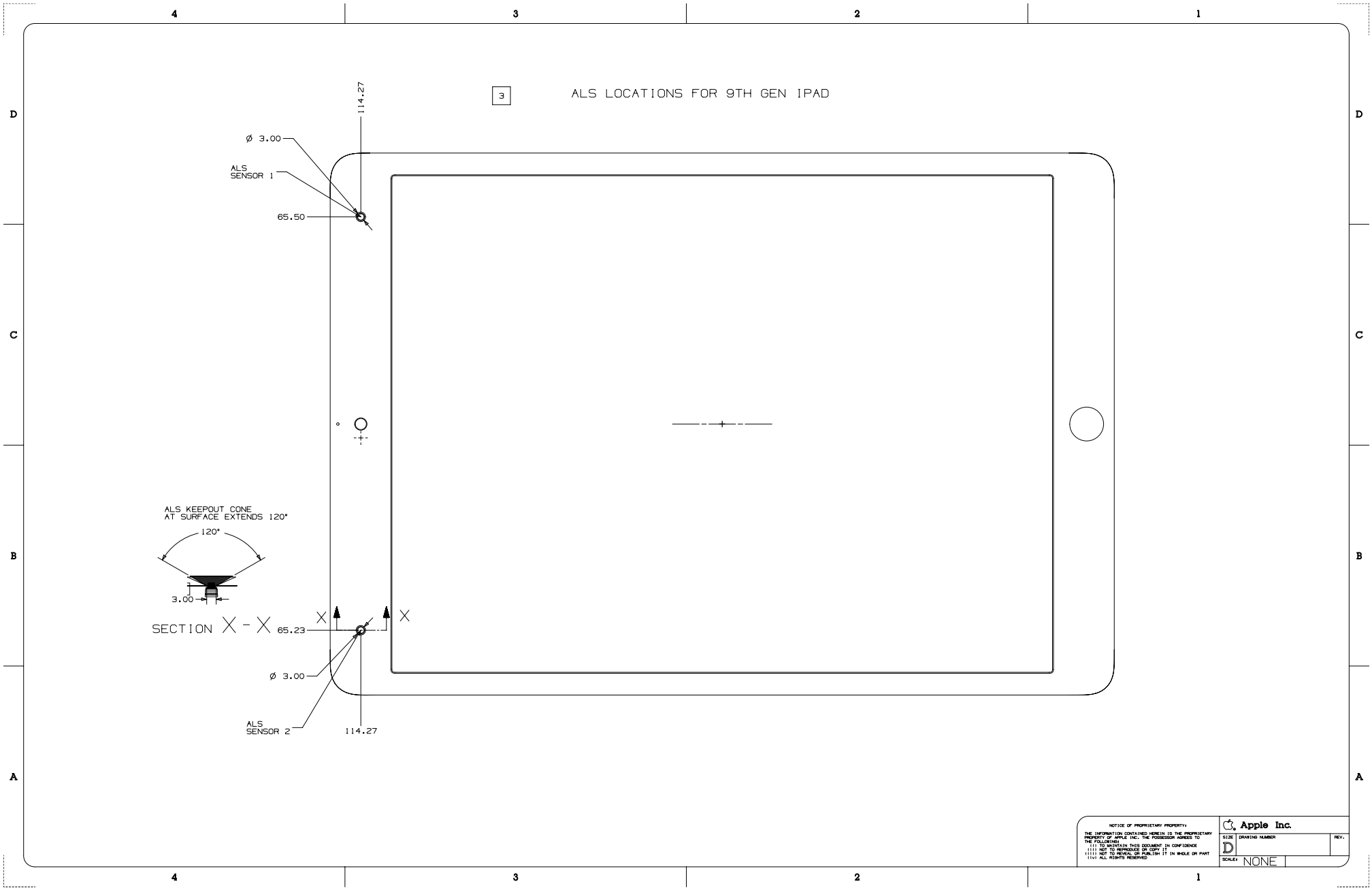

Copyright © 2024 Apple Inc. All Rights Reserved.

58.110 iPad (9th generation), iPad (8th generation) and iPad (7th generation) 4 of 4

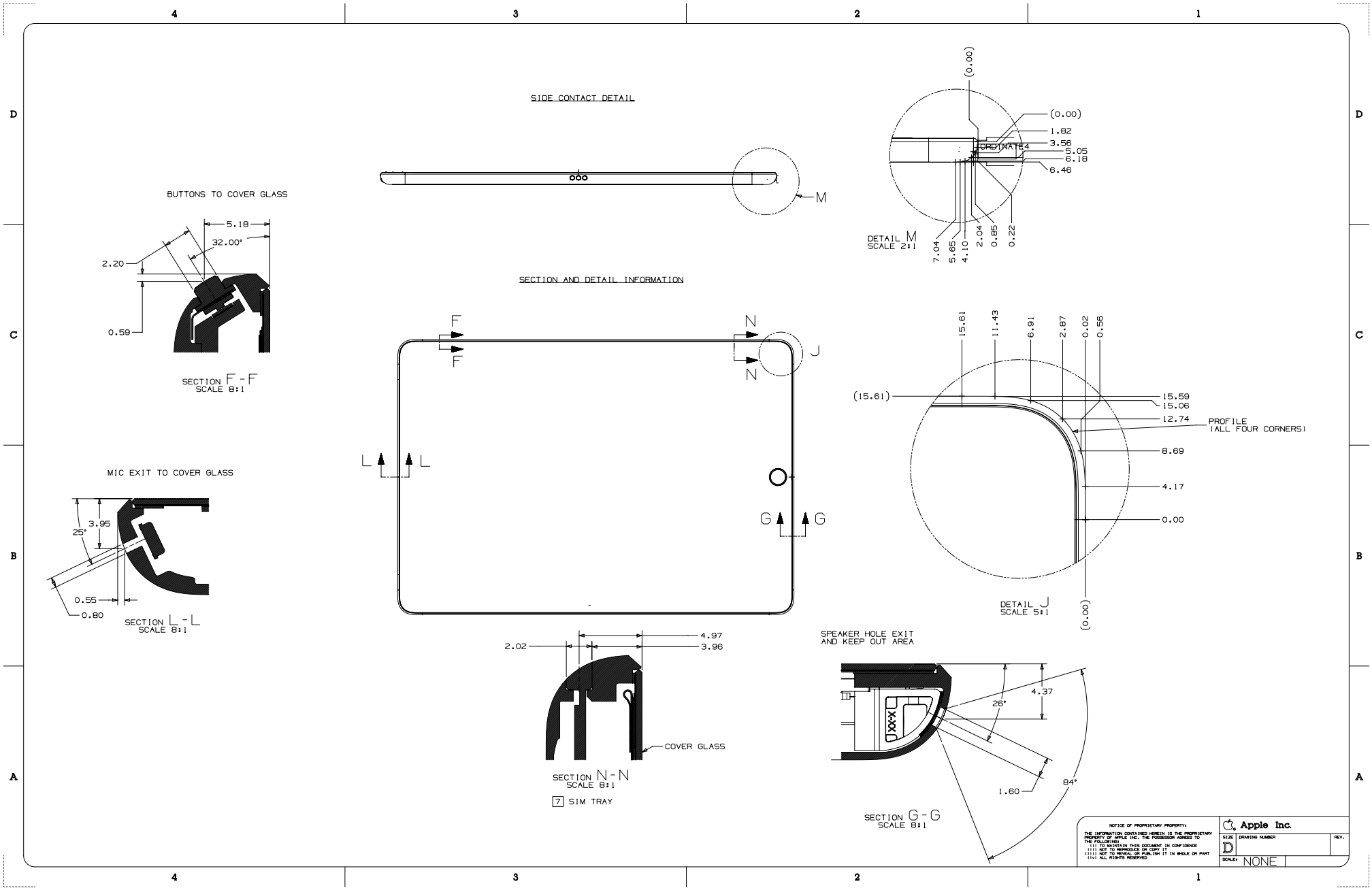

Copyright © 2024 Apple Inc. All Rights Reserved.

58.111 iPad Pro 12.9-inch (5th generation) 1 of 5

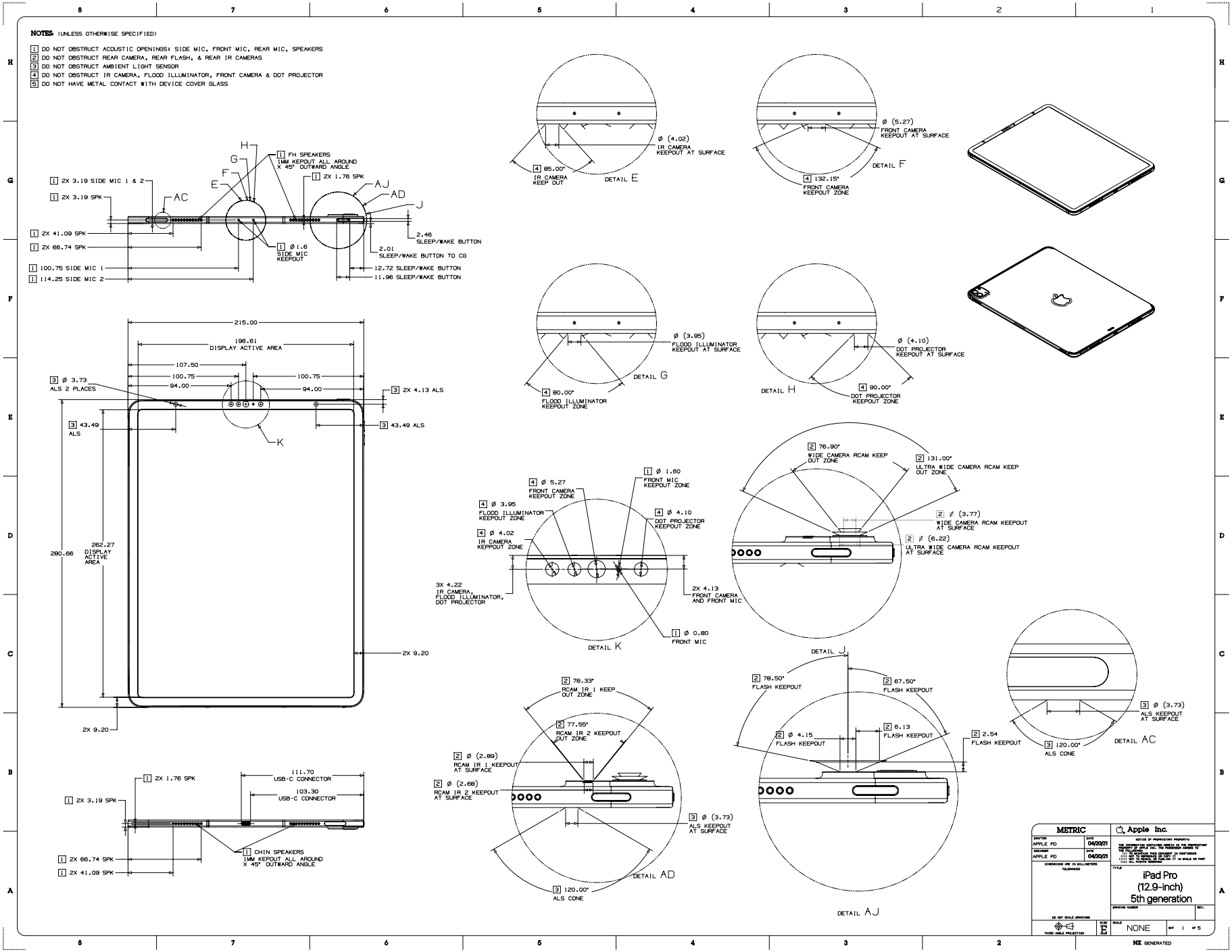

Copyright © 2024 Apple Inc. All Rights Reserved.

58.112 iPad Pro 12.9-inch (5th generation) 2 of 5

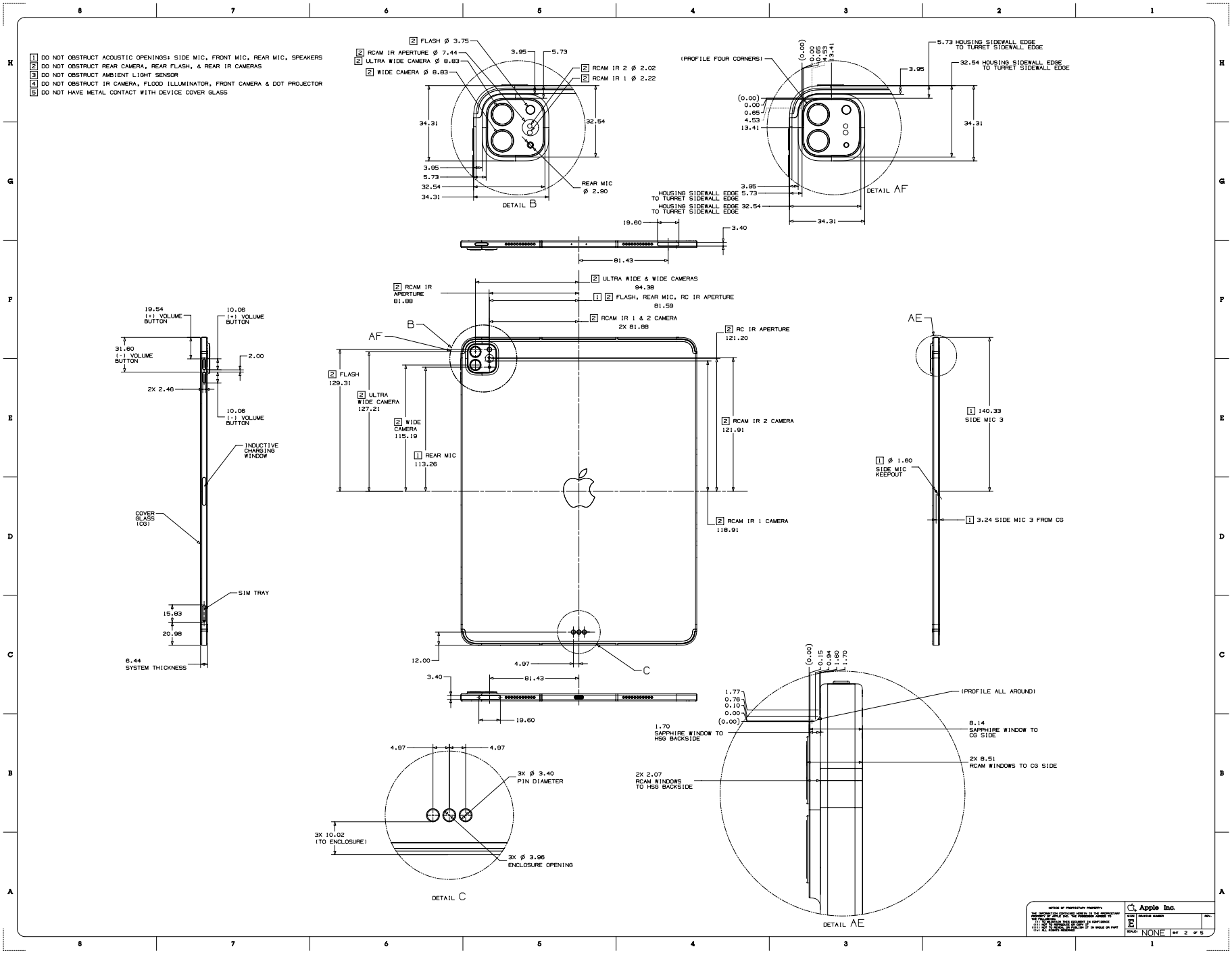

Copyright © 2024 Apple Inc. All Rights Reserved.

58.113 iPad Pro 12.9-inch (5th generation) 3 of 5

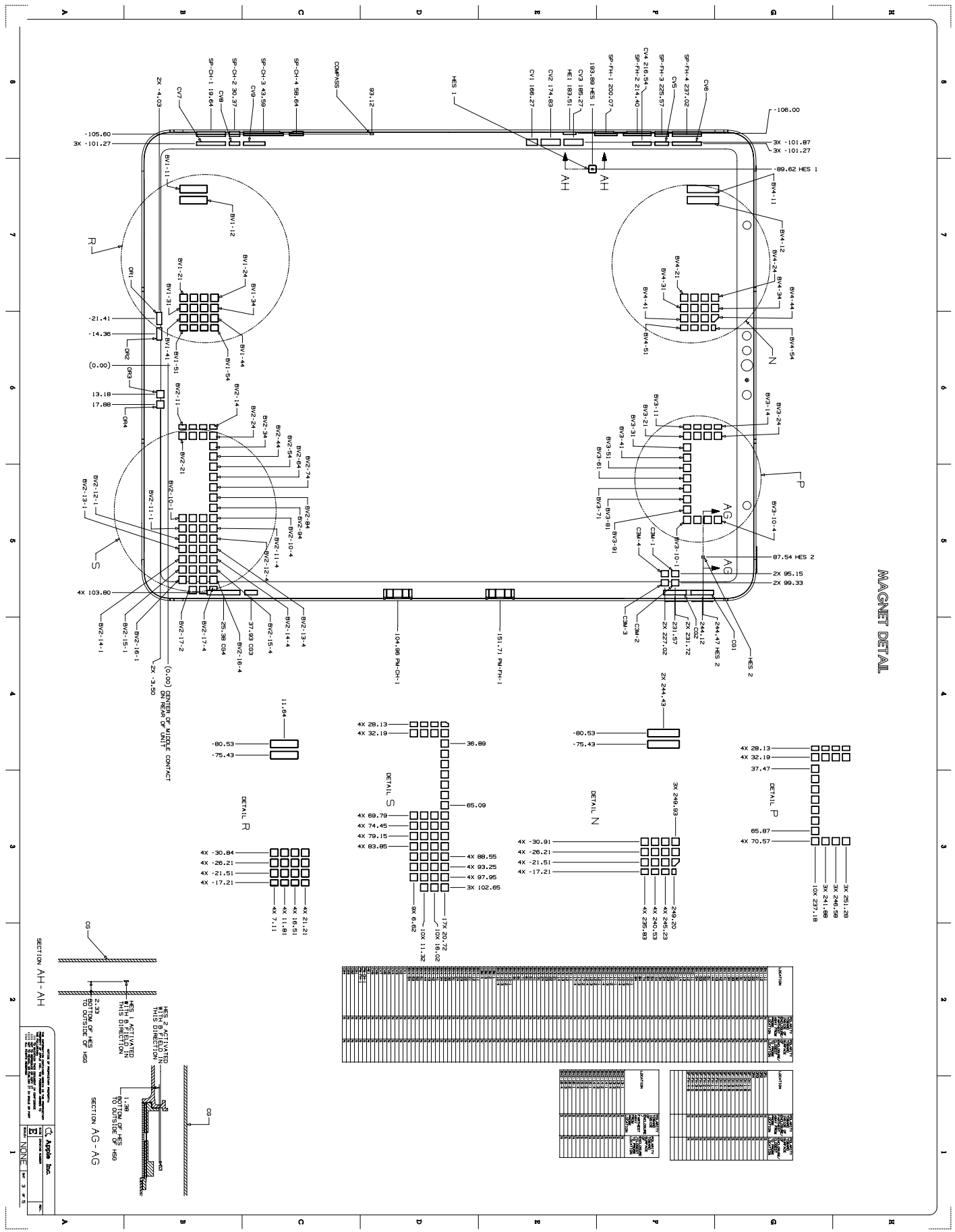

58.114 iPad Pro 12.9-inch (5th generation) 4 of 5

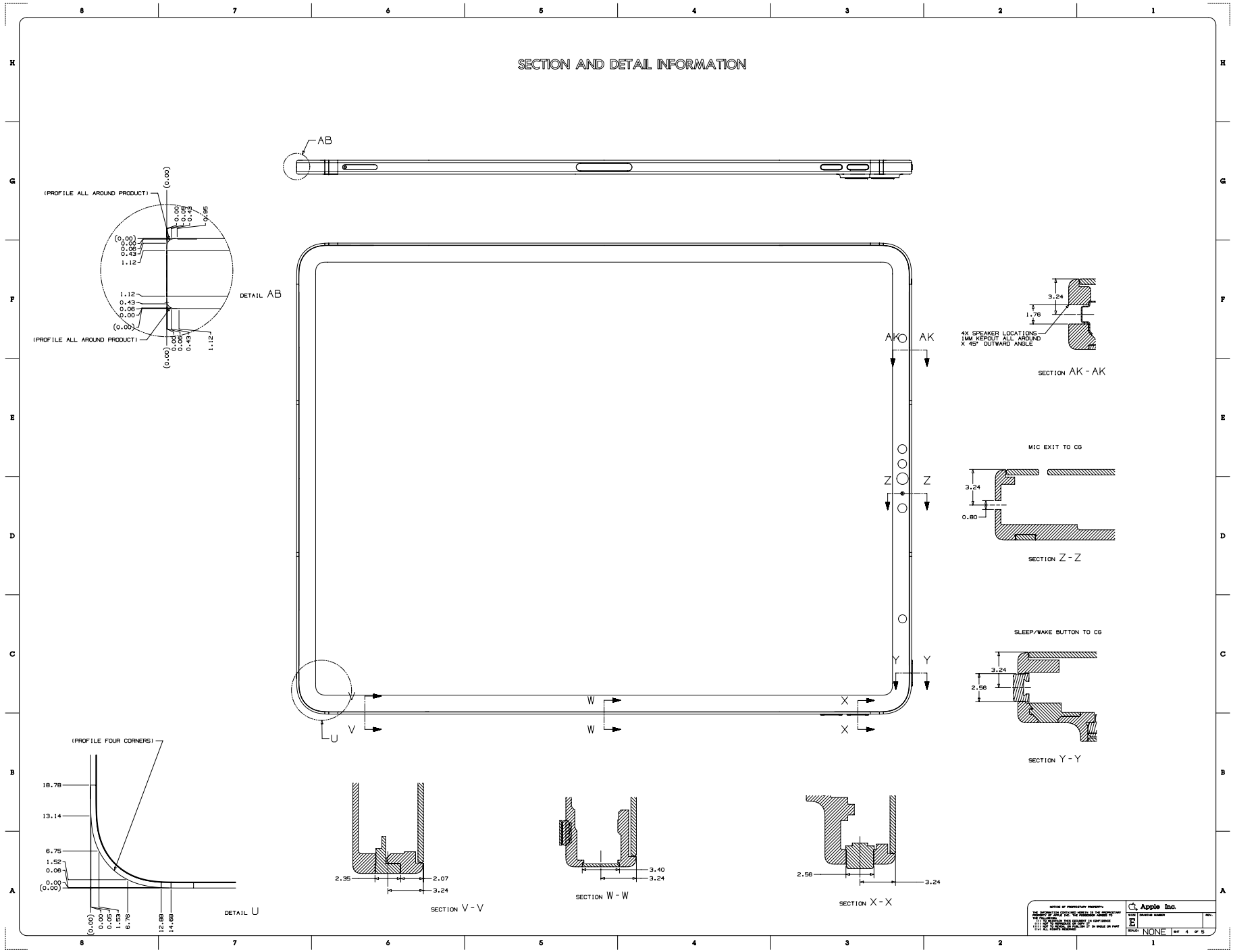

 Copyright © 2024 Apple Inc. All Rights Reserved.

58.115 iPad Pro 12.9-inch (5th generation) 5 of 5

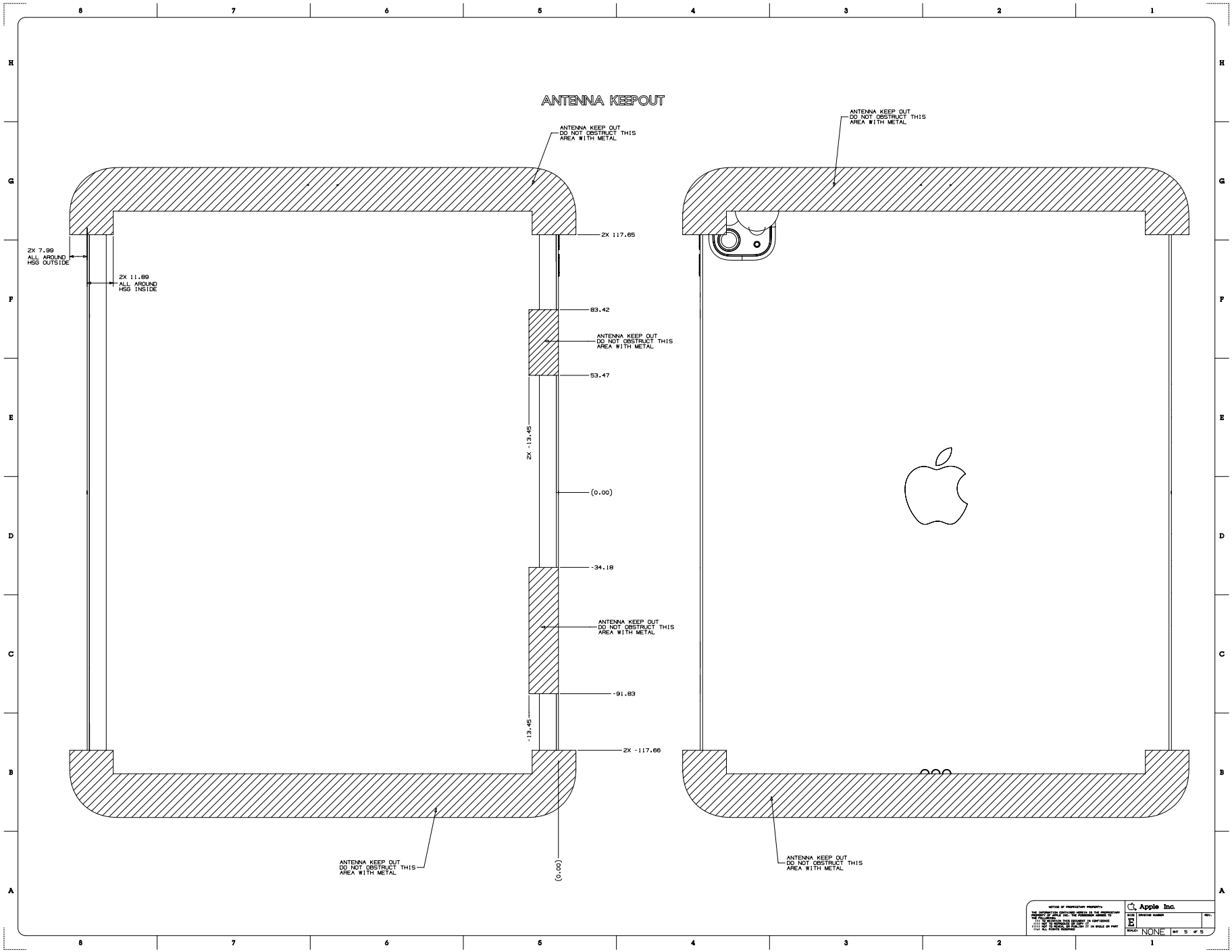

Copyright © 2024 Apple Inc. All Rights Reserved.

58.116 iPad Pro 11-inch (3rd generation) 1 of 5

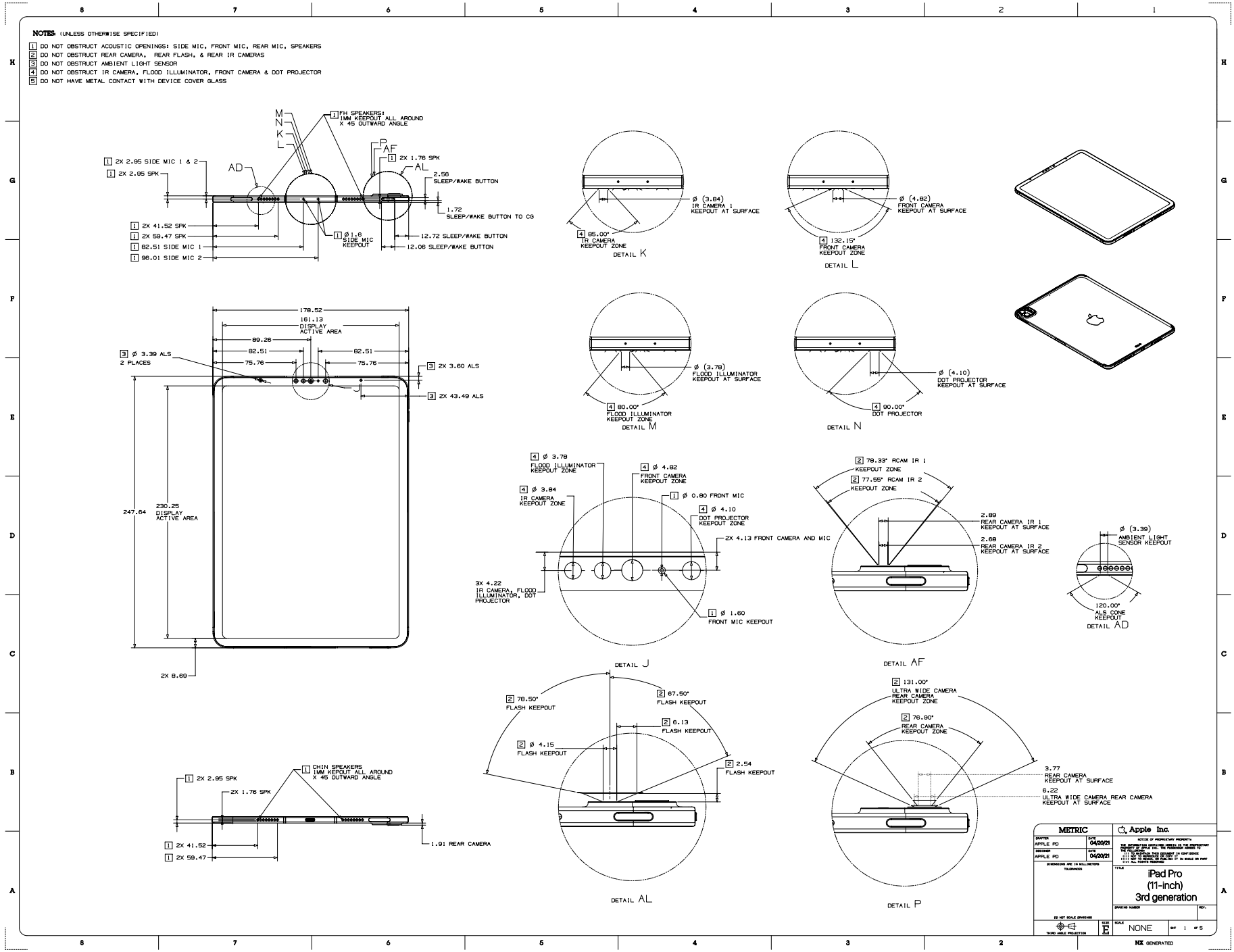

Copyright © 2024 Apple Inc. All Rights Reserved.

58.117 iPad Pro 11-inch (3rd generation) 2 of 5

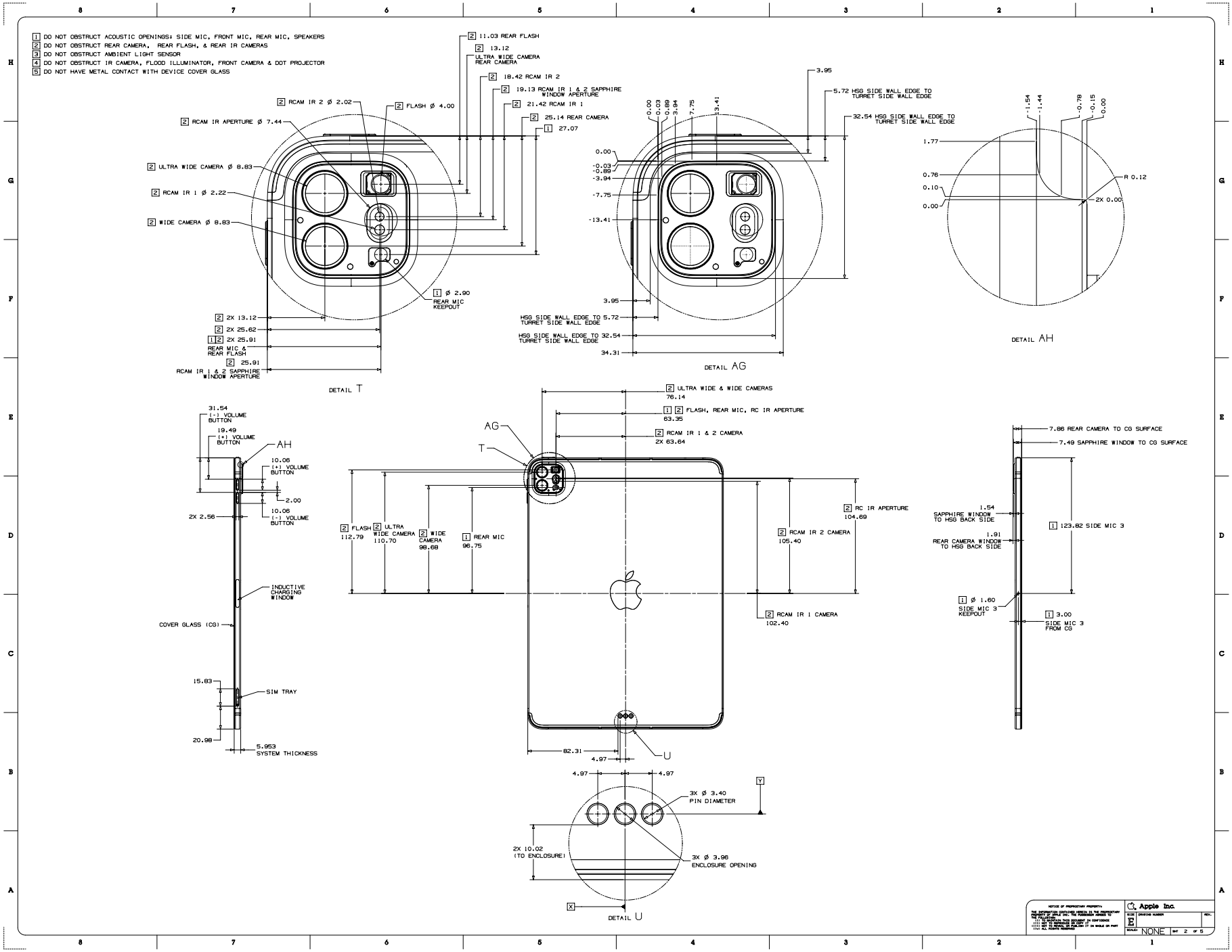

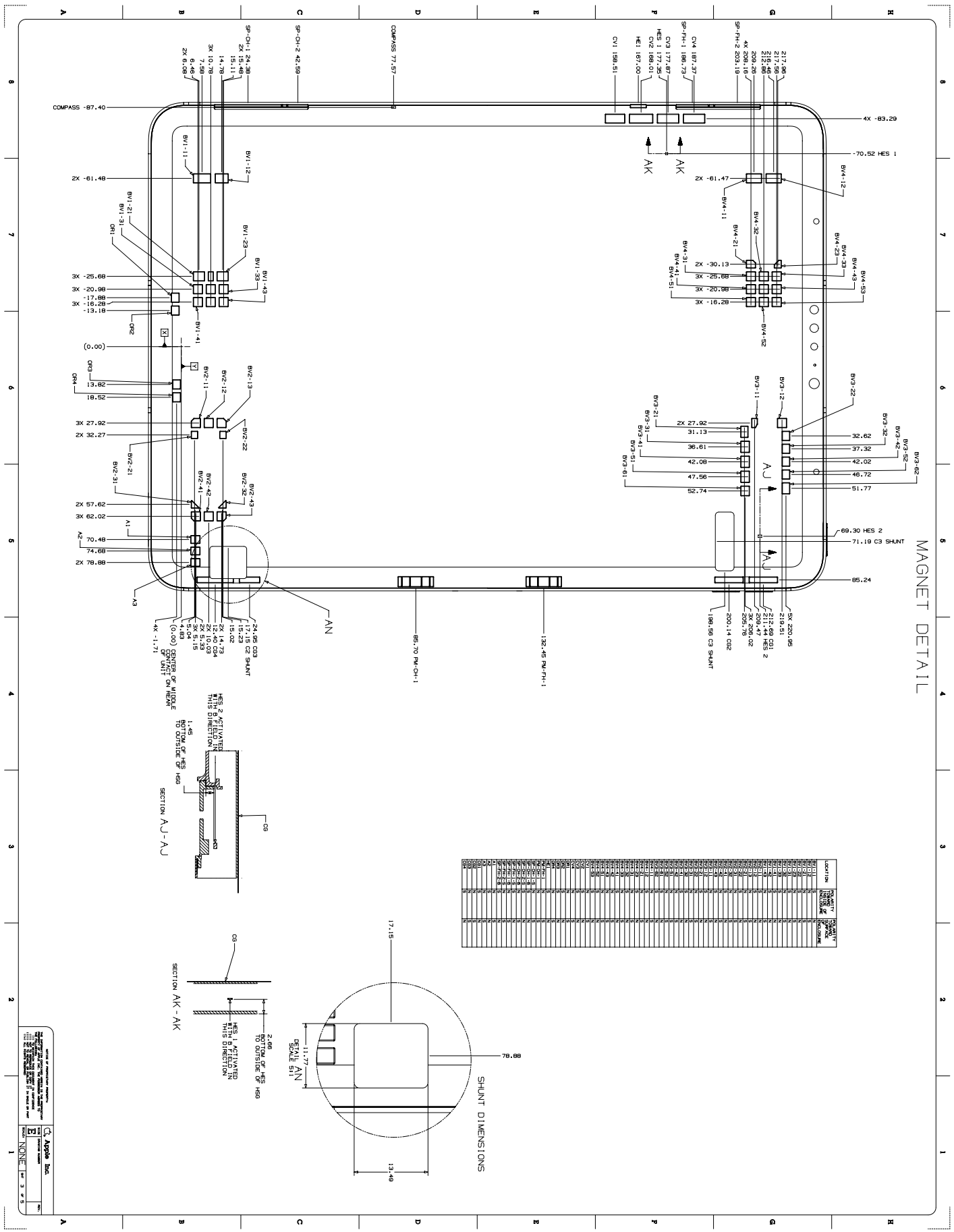

2024-05-13 | Copyright © 2024 Apple Inc. All Rights Reserved.

58.119 iPad Pro 11-inch (3rd generation) 4 of 5

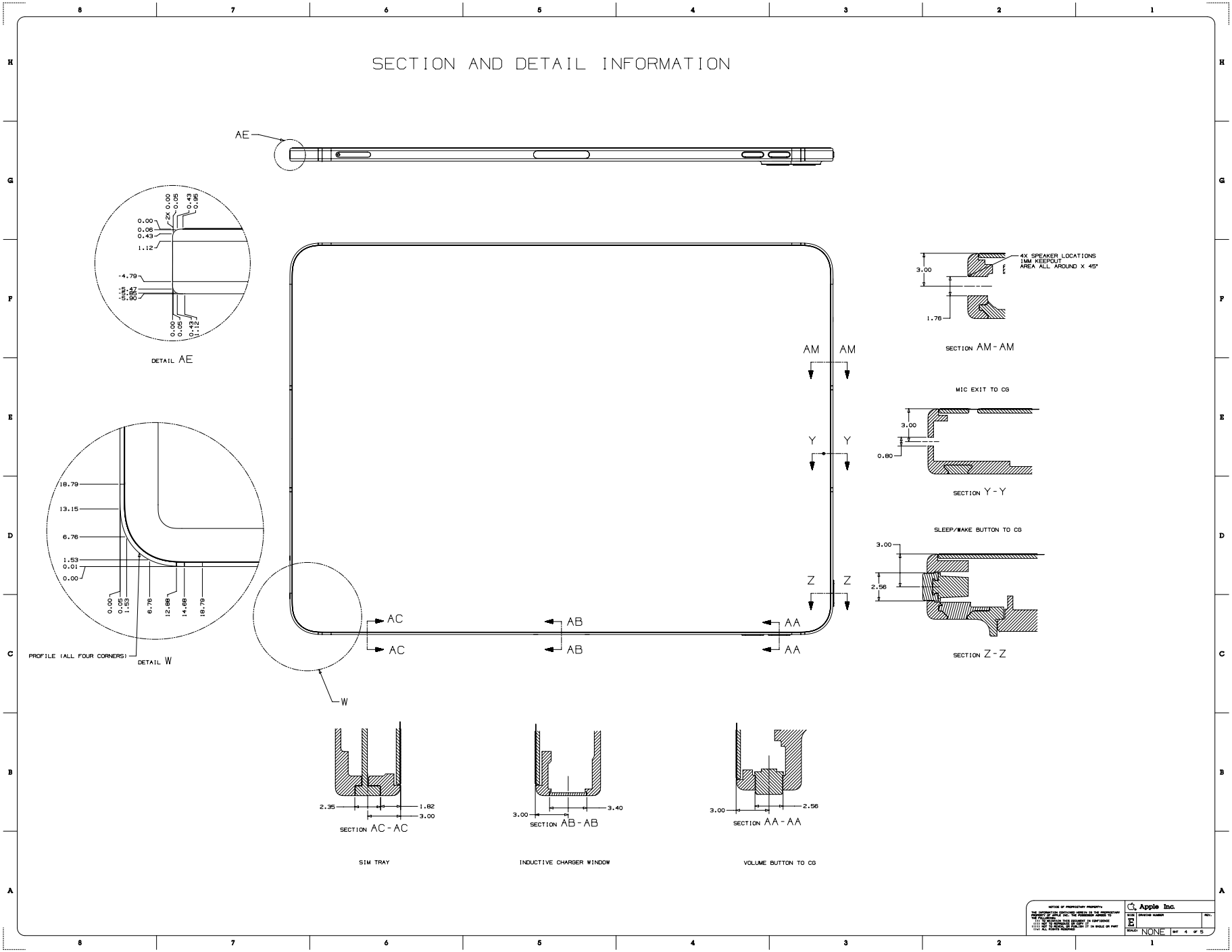

Copyright © 2024 Apple Inc. All Rights Reserved.

58.120 iPad Pro 11-inch (3rd generation) 5 of 5

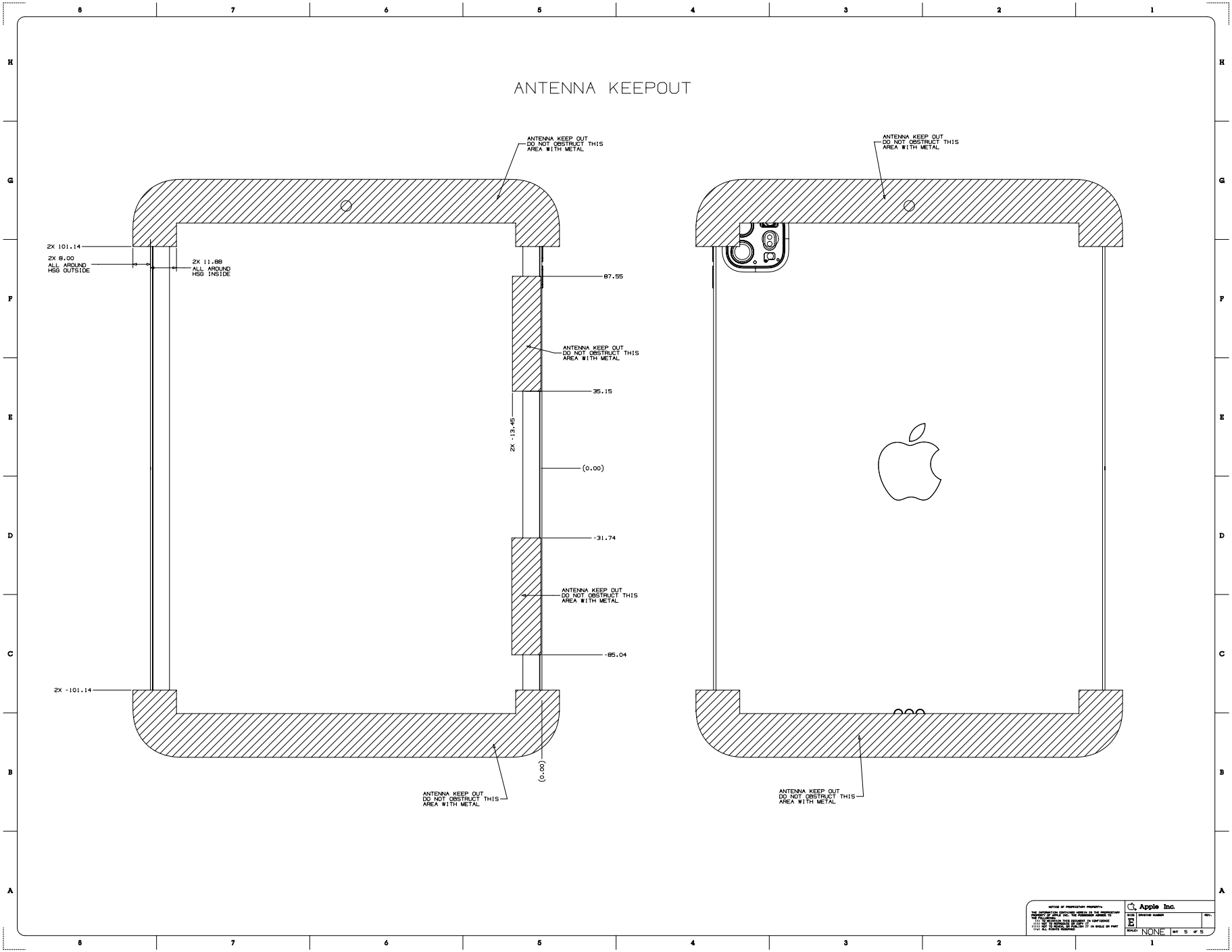

Copyright © 2024 Apple Inc. All Rights Reserved.

58.121 iPad Pro 12.9-inch (4th generation) 1 of 5

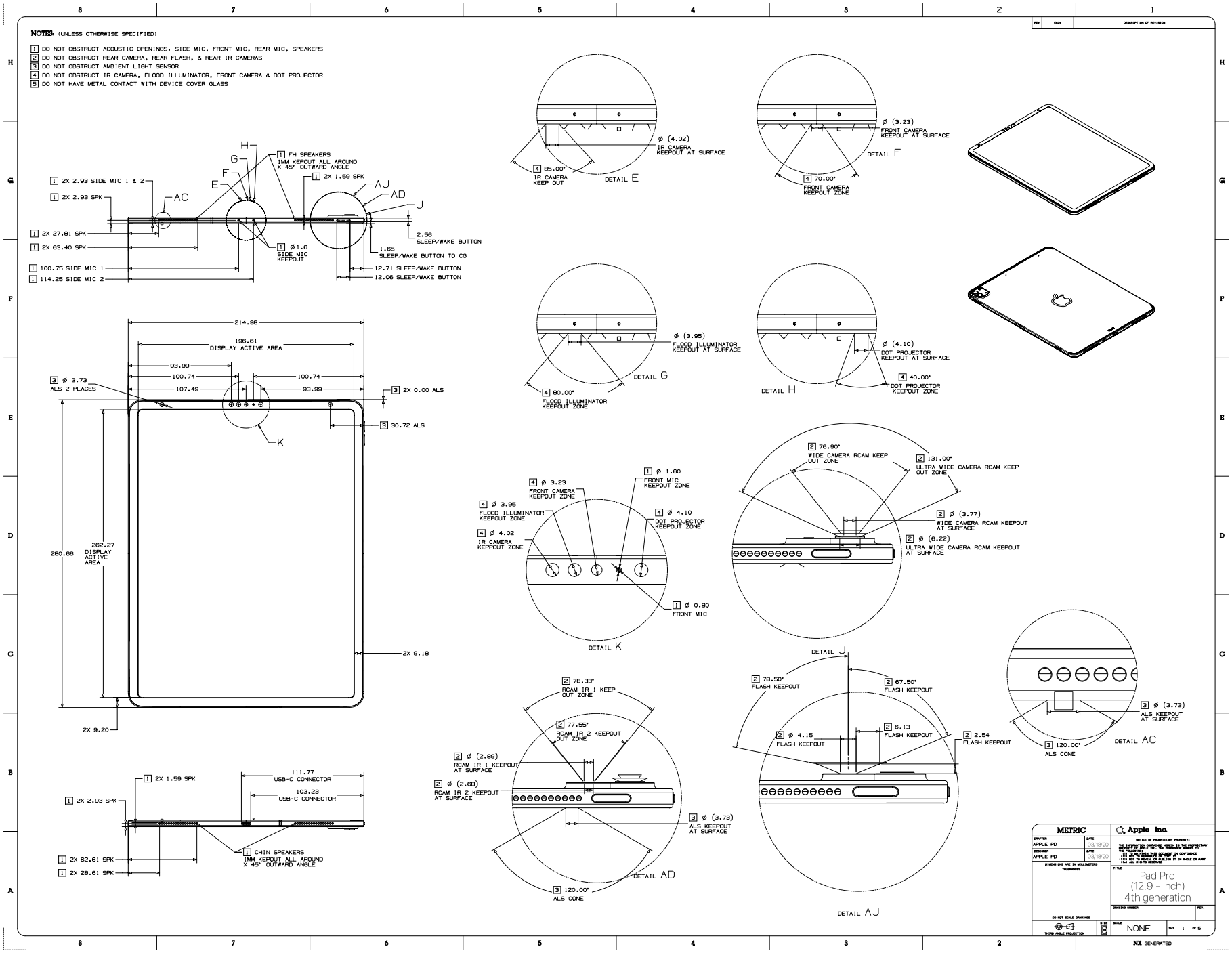

Copyright © 2024 Apple Inc. All Rights Reserved.

58.122 iPad Pro 12.9-inch (4th generation) 2 of 5

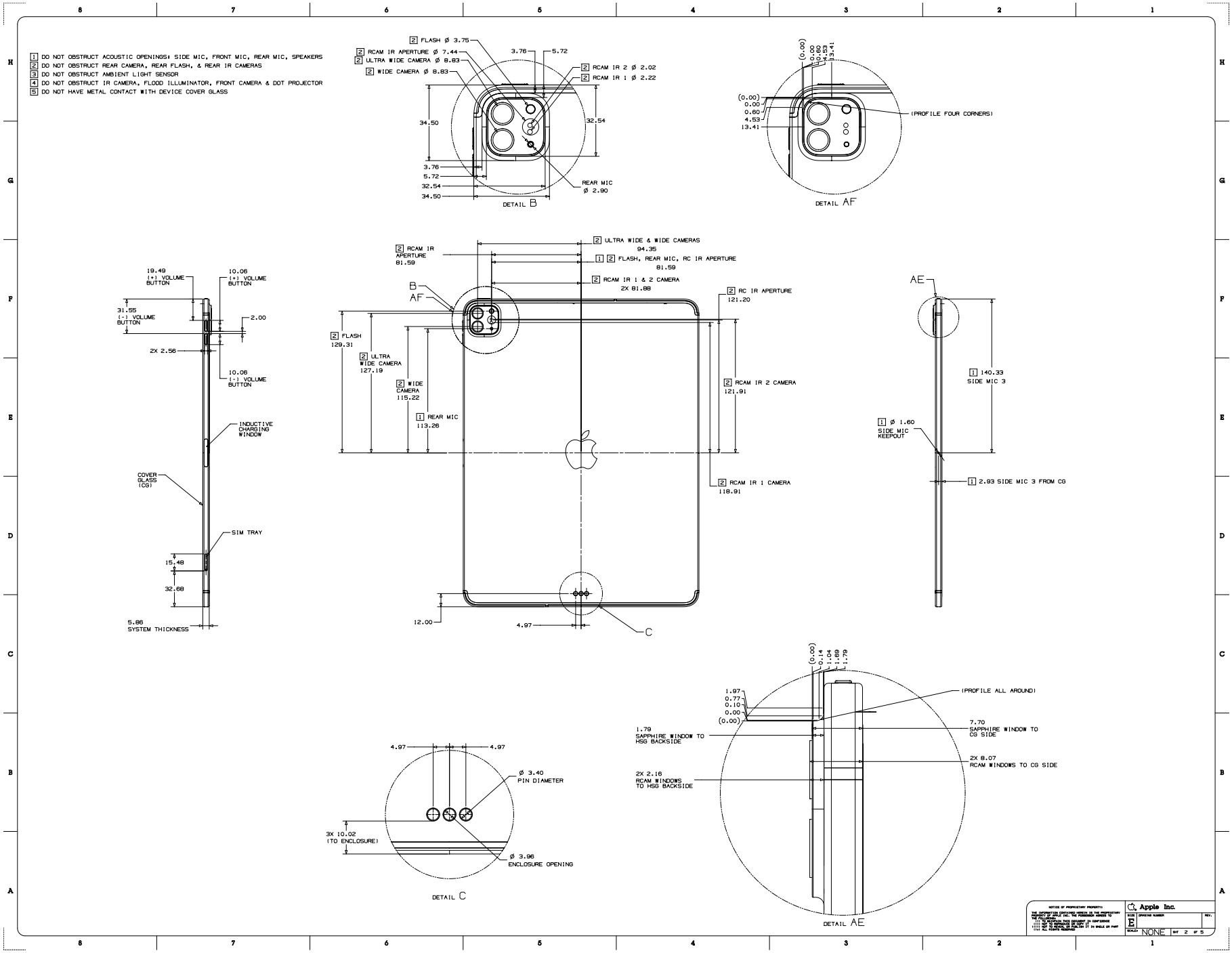

Copyright © 2024 Apple Inc. All Rights Reserved.

58.123 iPad Pro 12.9-inch (4th generation) 3 of 5

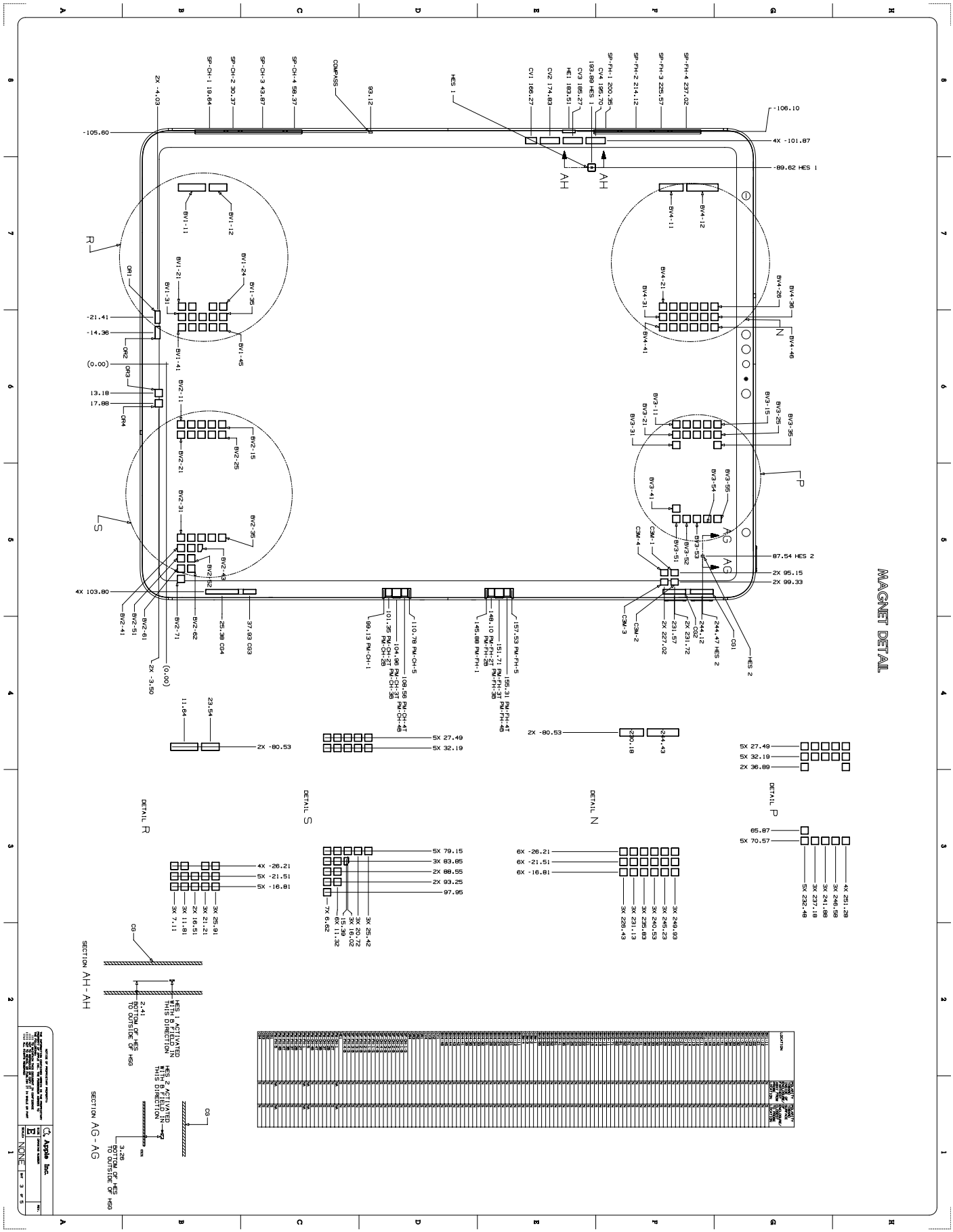

2024-05-13 | Copyright © 2024 Apple Inc. All Rights Reserved.

58.124 iPad Pro 12.9-inch (4th generation) 4 of 5

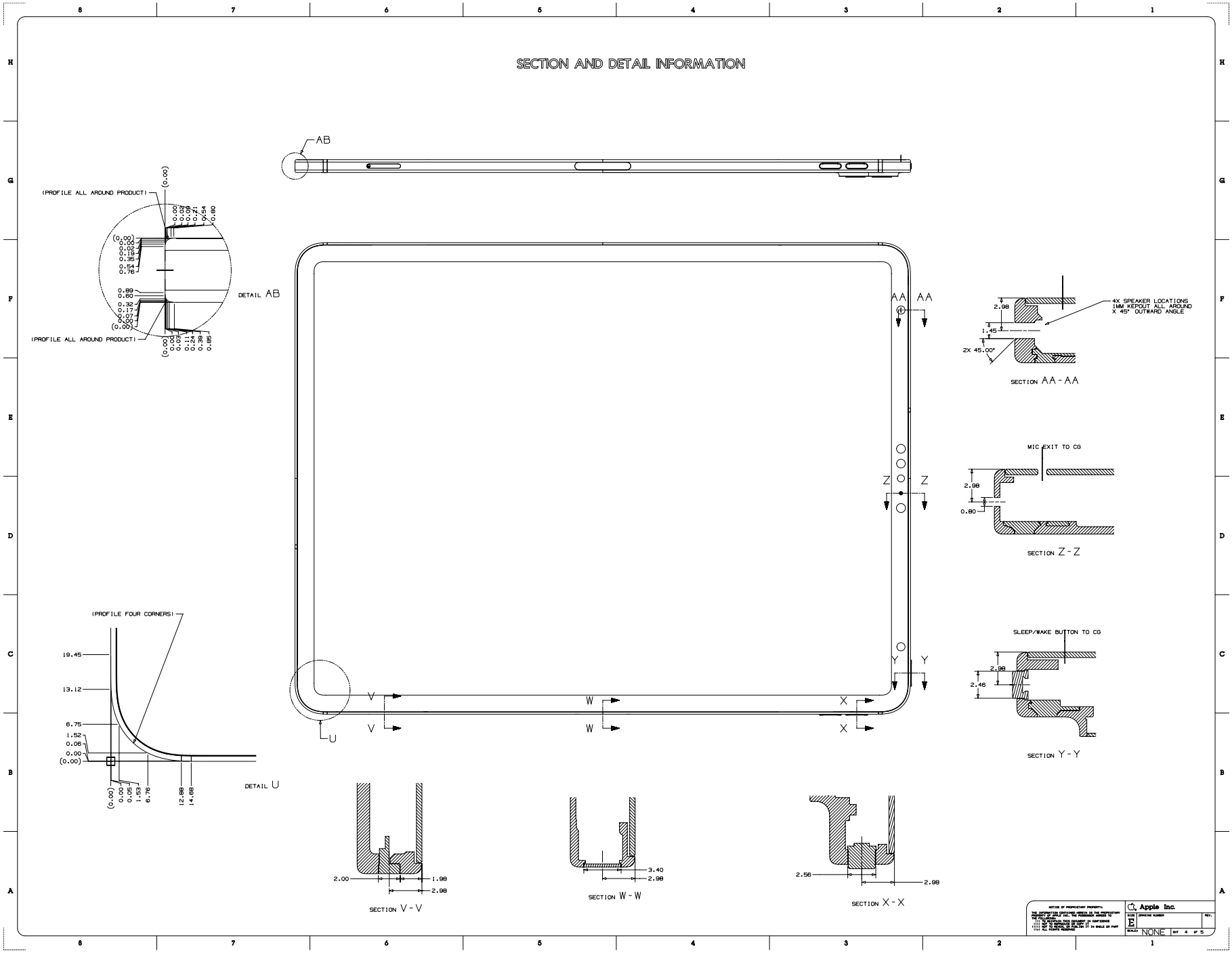

Copyright © 2024 Apple Inc. All Rights Reserved.

58.125 iPad Pro 12.9-inch (4th generation) 5 of 5

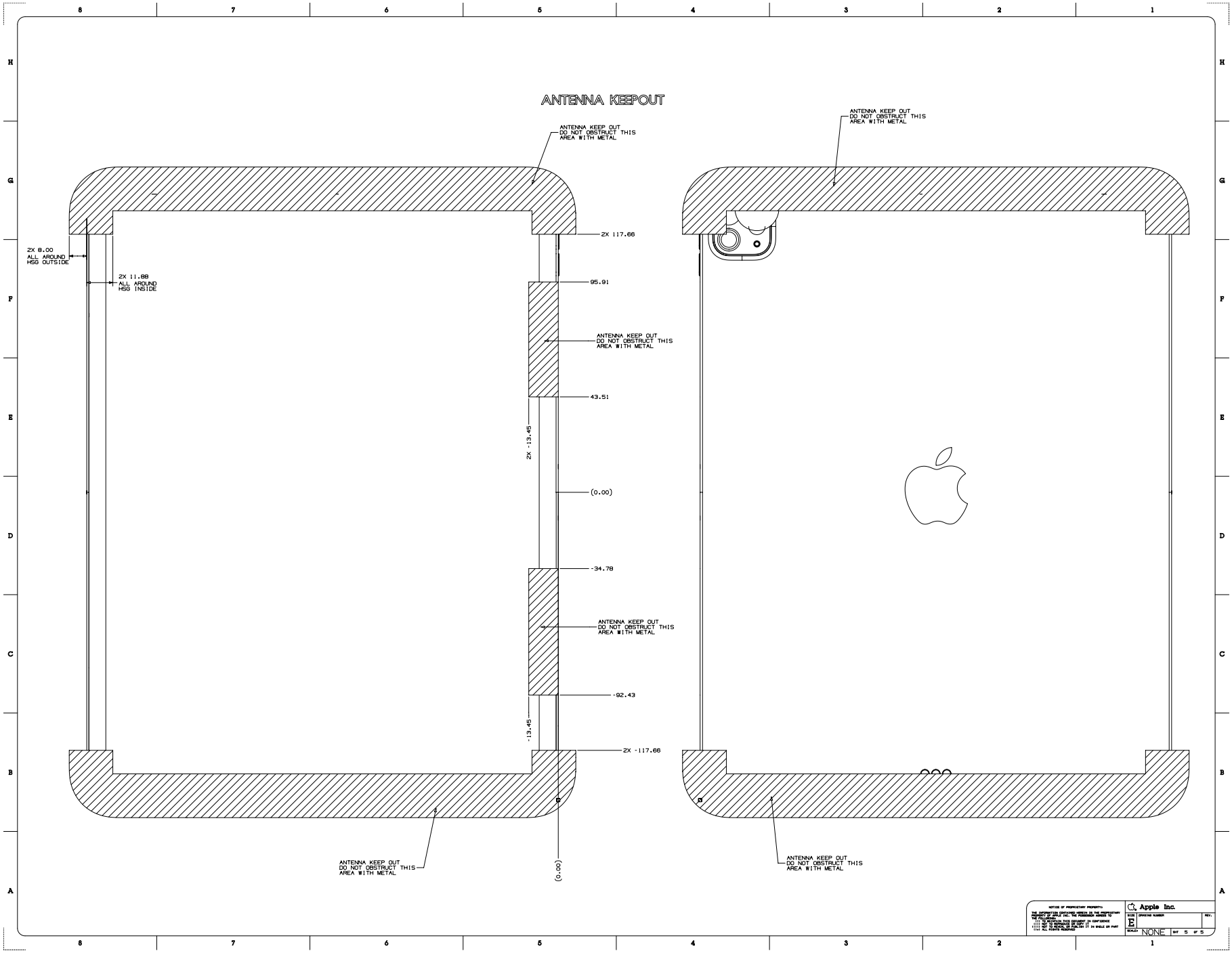

Copyright © 2024 Apple Inc. All Rights Reserved.

58.126 iPad Pro 11-inch (2nd generation) 1 of 5

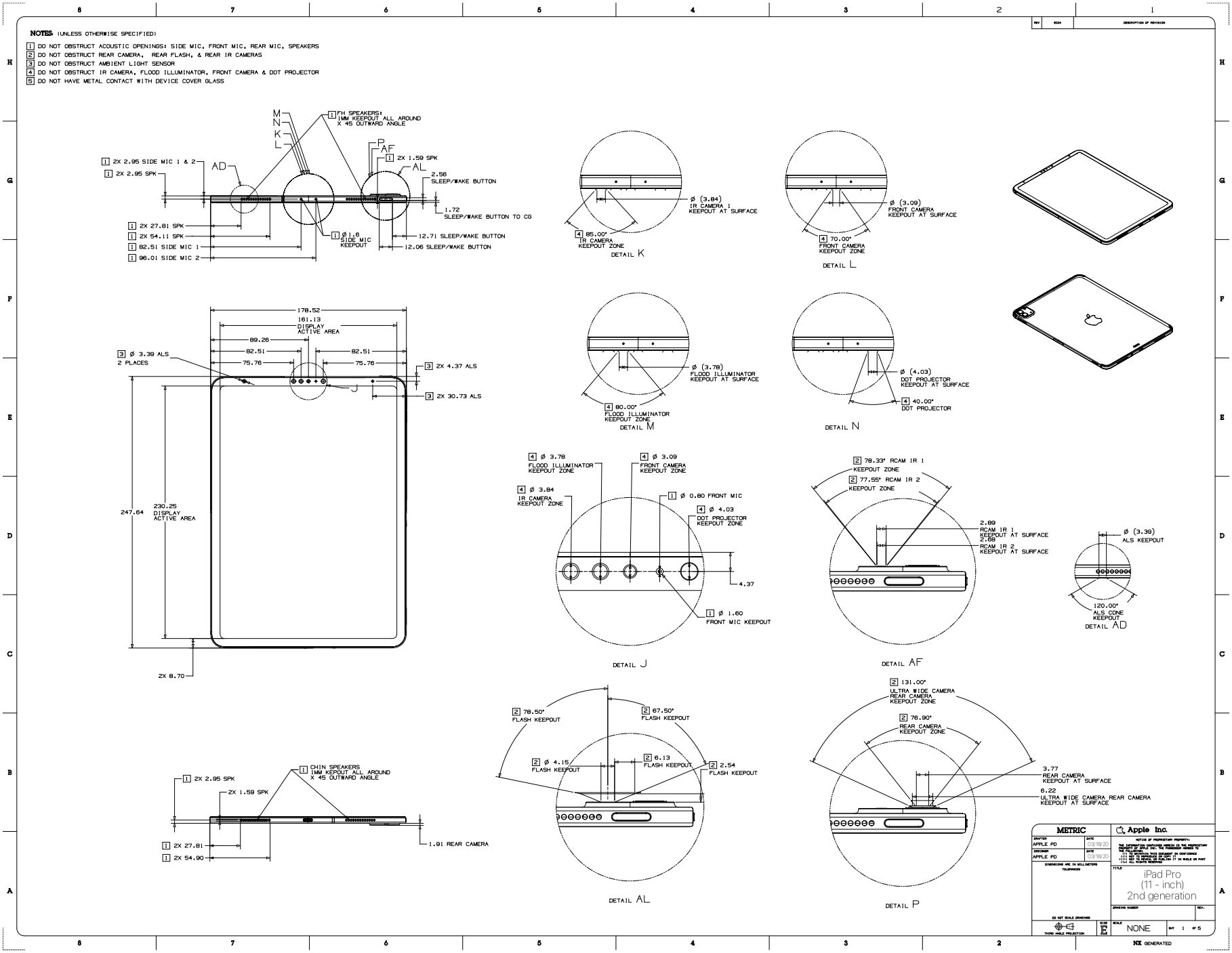

Copyright © 2024 Apple Inc. All Rights Reserved.

58.127 iPad Pro 11-inch (2nd generation) 2 of 5

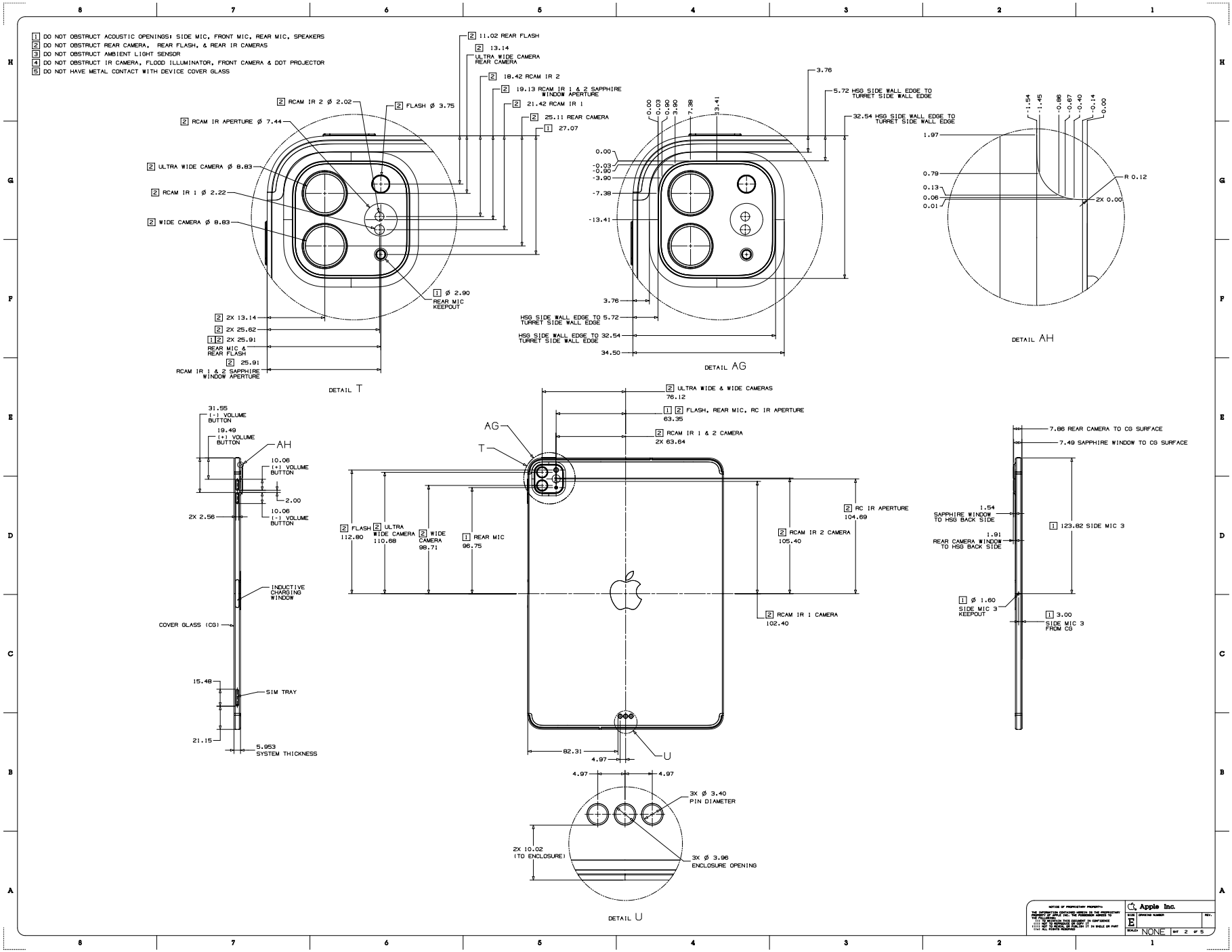

Copyright © 2024 Apple Inc. All Rights Reserved.

58.128 iPad Pro 11-inch (2nd generation) 3 of 5

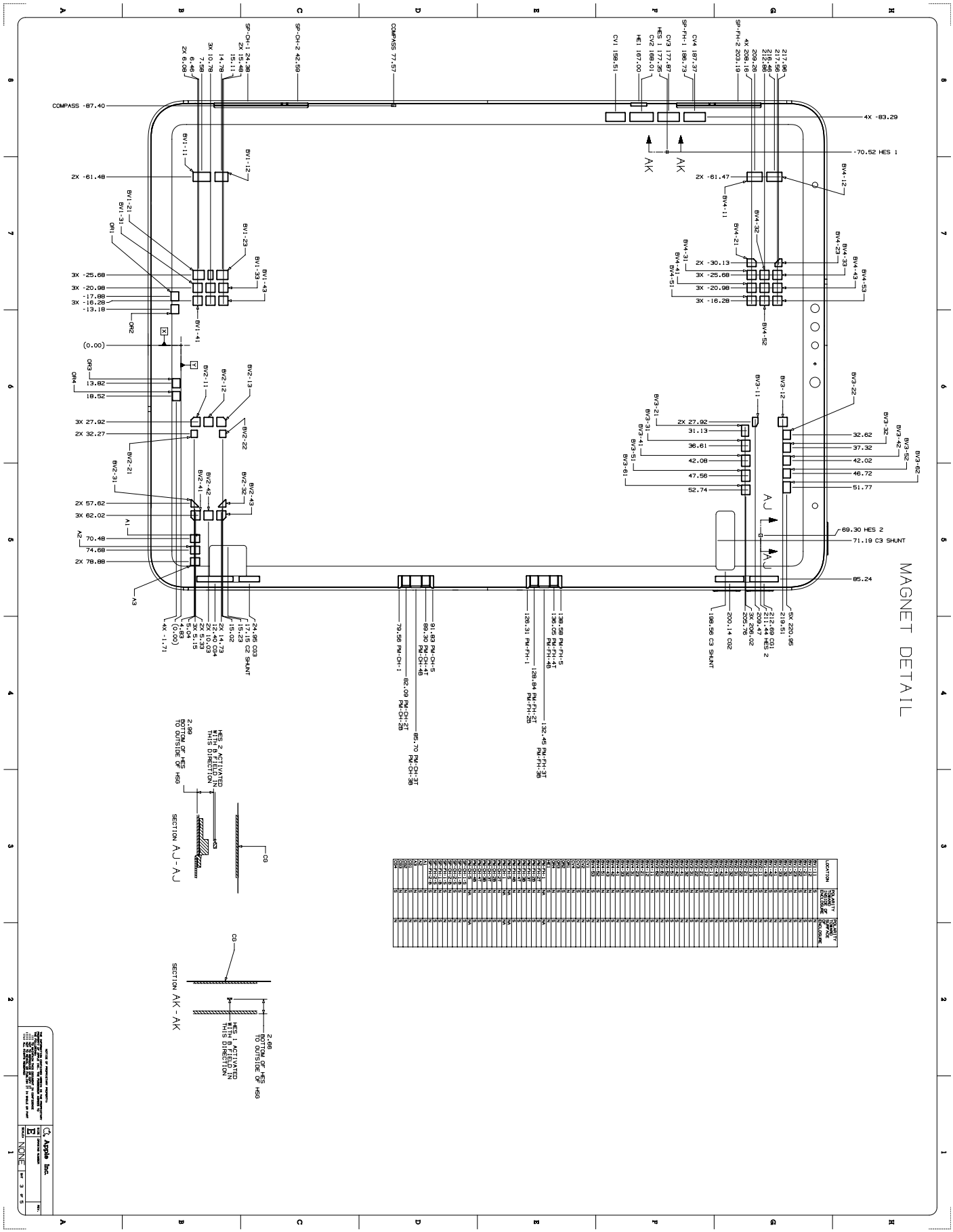

2024-05-13 | Copyright © 2024 Apple Inc. All Rights Reserved.

58.129 iPad Pro 11-inch (2nd generation) 4 of 5

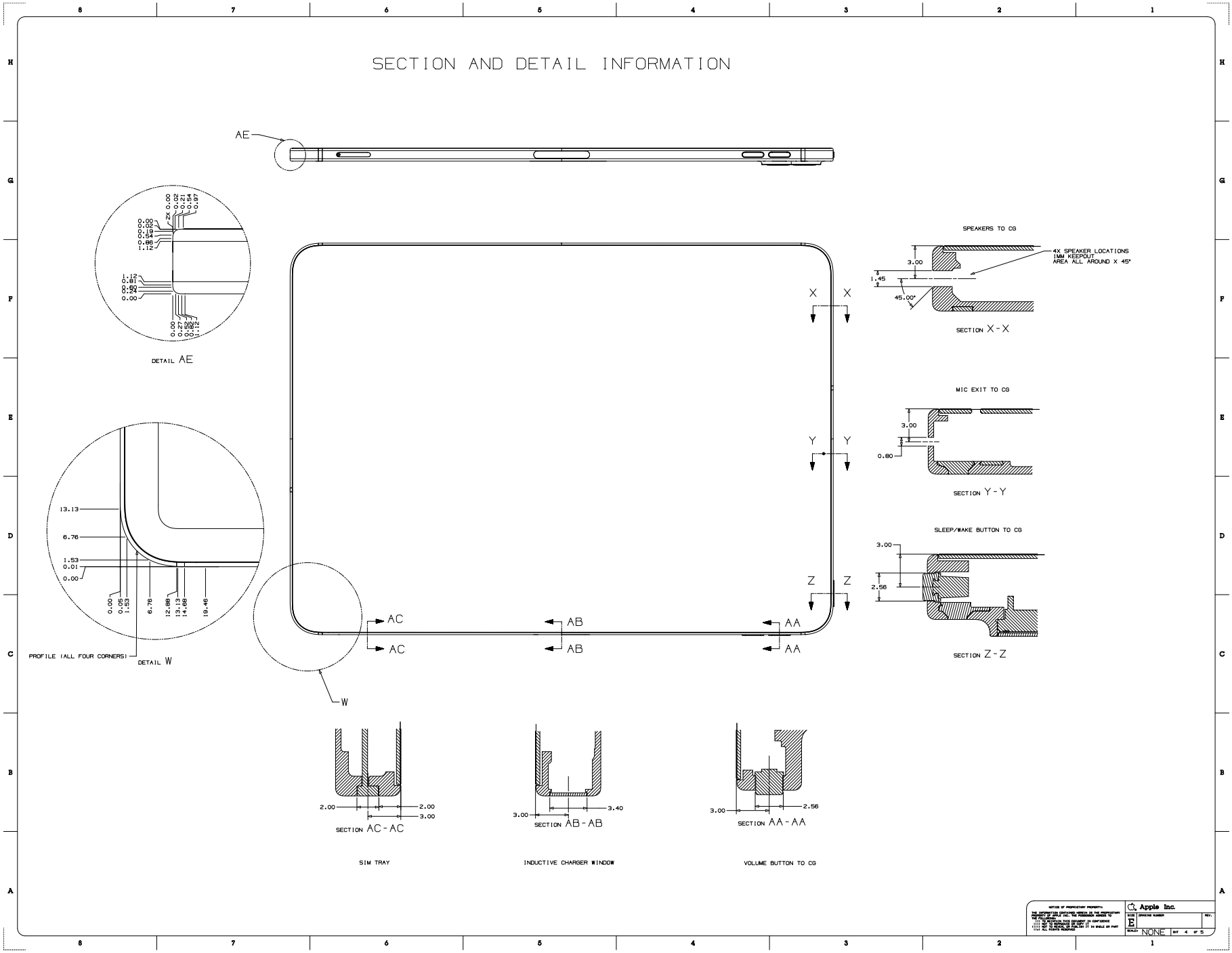

Copyright © 2024 Apple Inc. All Rights Reserved.

58.130 iPad Pro 11-inch (2nd generation) 5 of 5

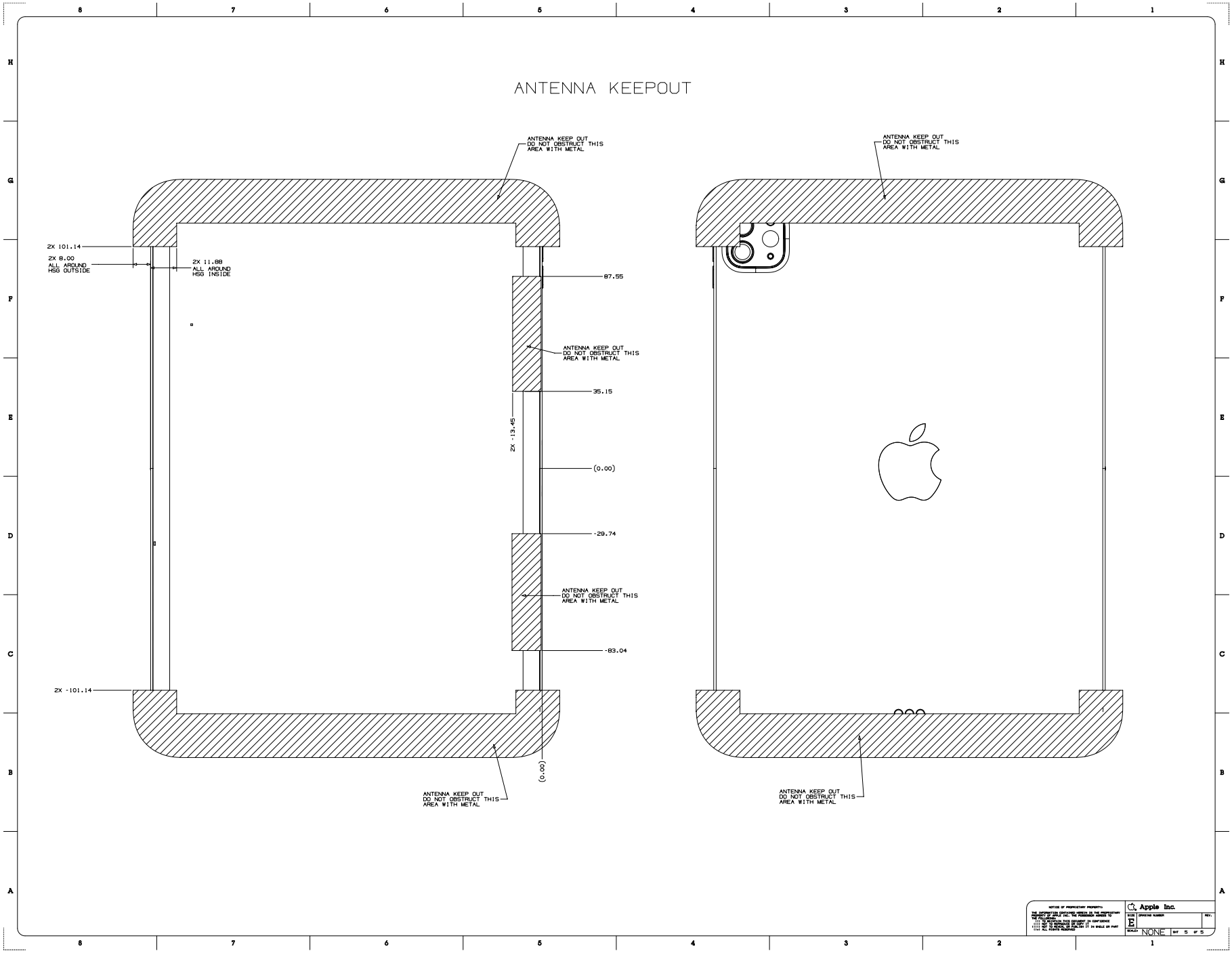

Copyright © 2024 Apple Inc. All Rights Reserved.

58.131 iPad Air (3rd generation) with Wi-Fi 1 of 3

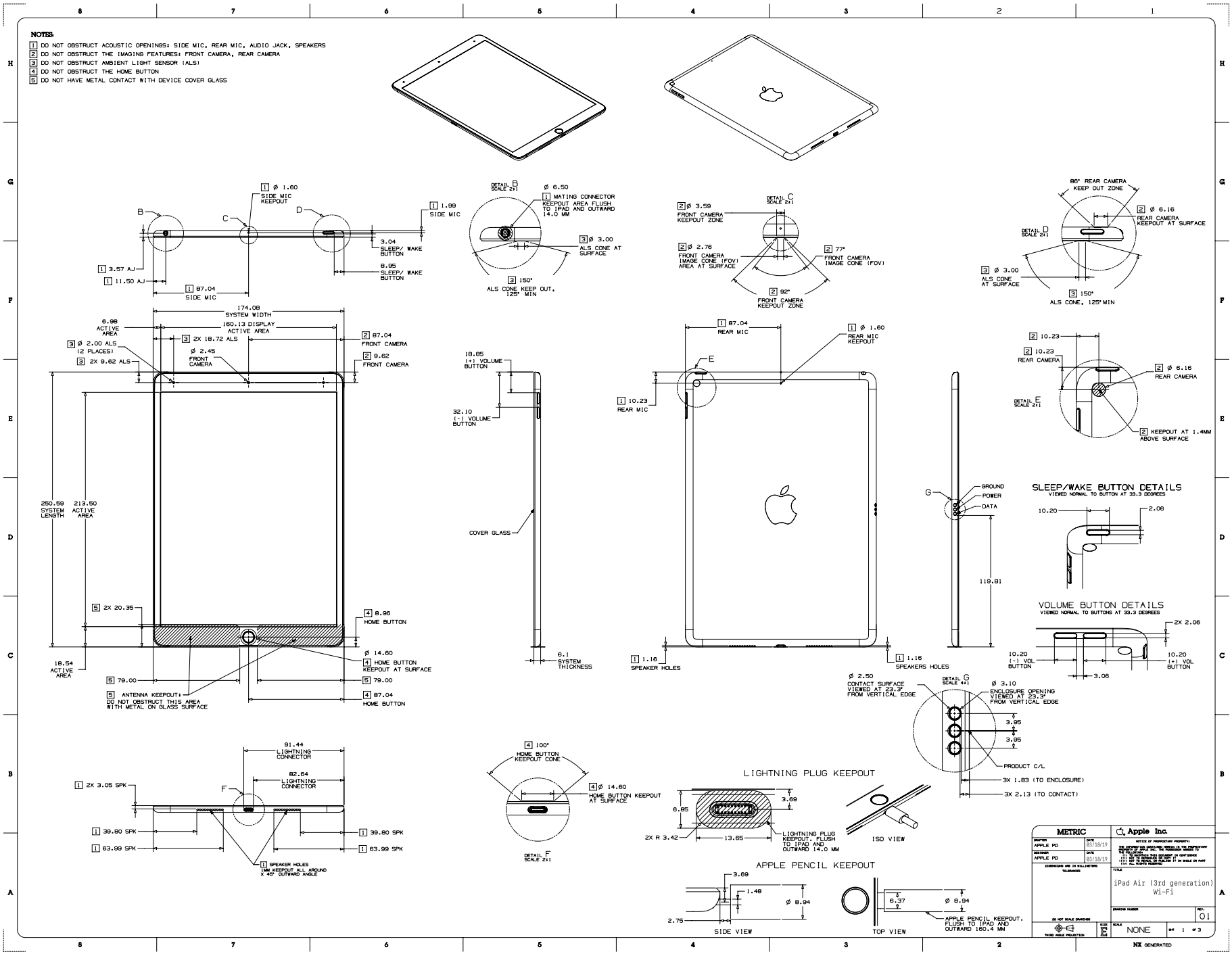

Copyright © 2024 Apple Inc. All Rights Reserved.

58.132 iPad Air (3rd generation) with Wi-Fi 2 of 3

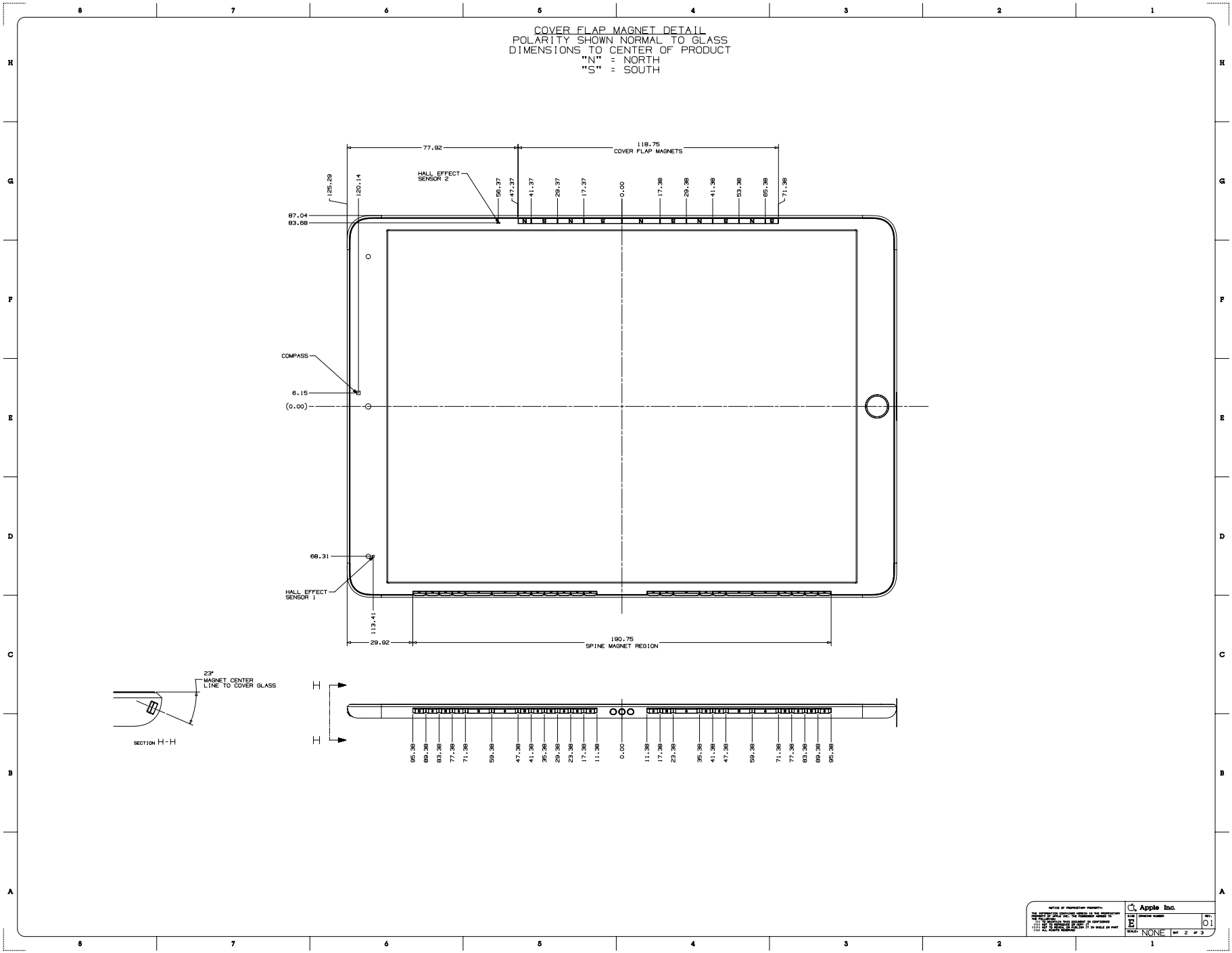

Copyright © 2024 Apple Inc. All Rights Reserved.

58.133 iPad Air (3rd generation) with Wi-Fi 3 of 3

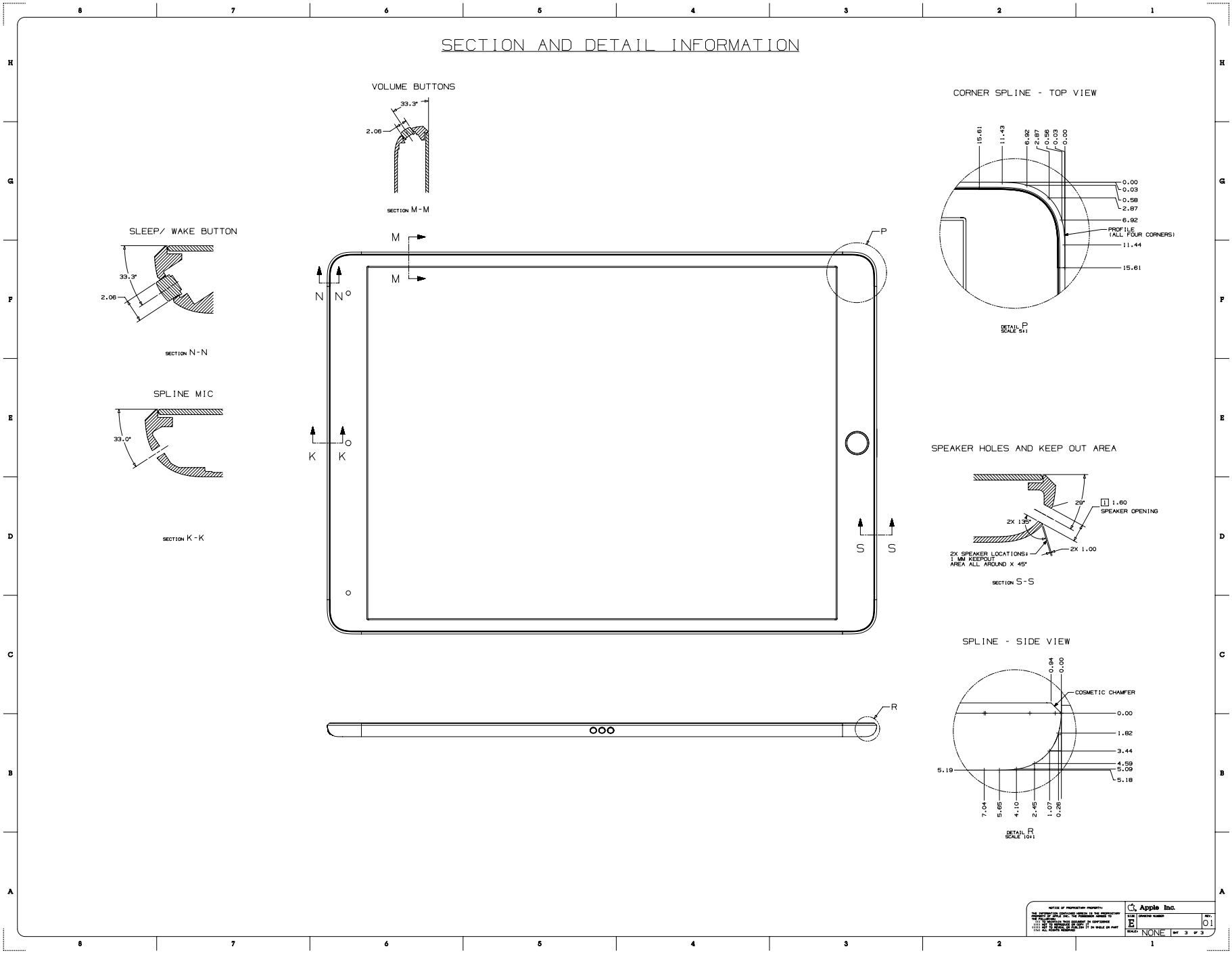

Copyright © 2024 Apple Inc. All Rights Reserved.

58.134 iPad Air (3rd generation) with Wi-Fi + Cellular 1 of 3

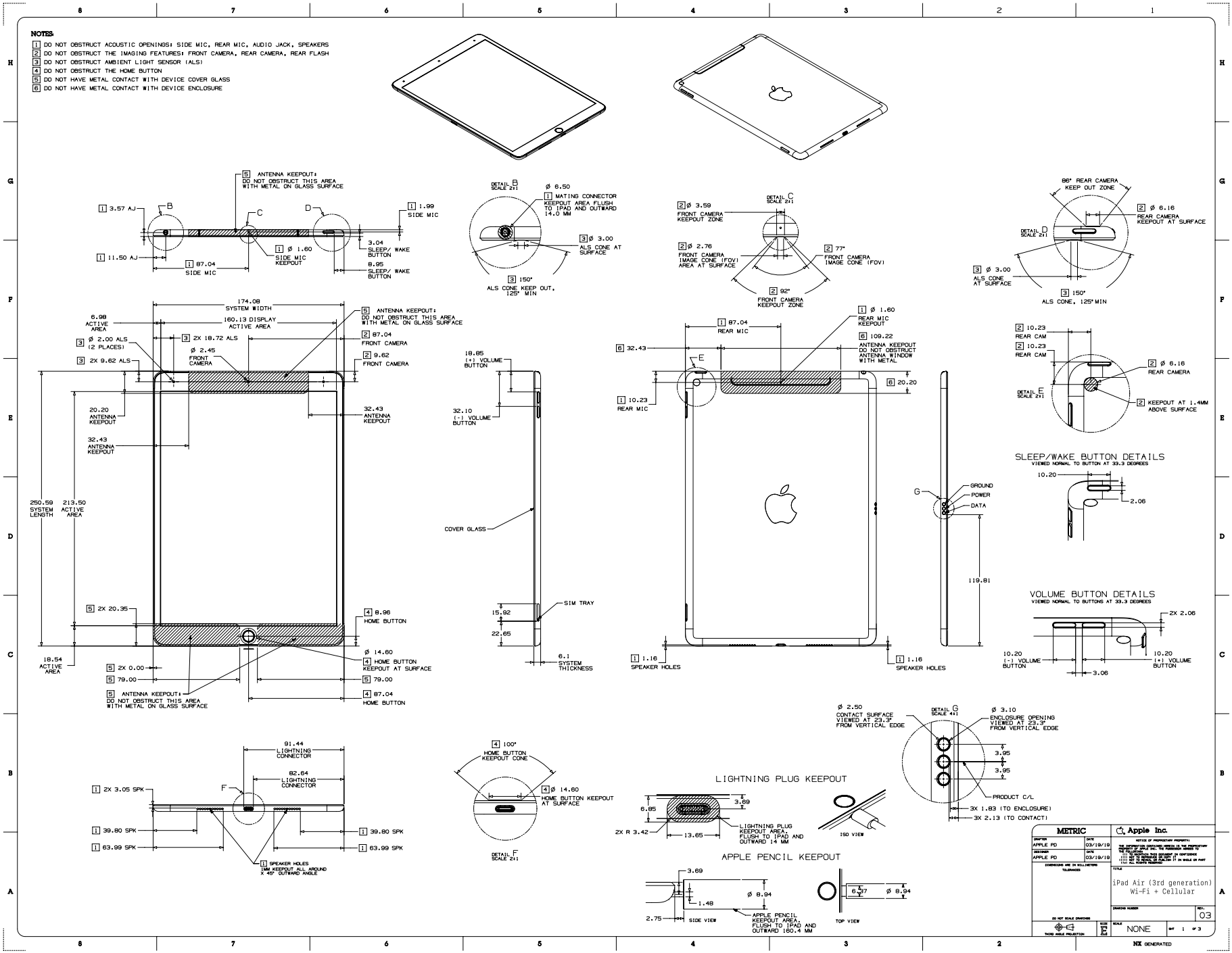

Copyright © 2024 Apple Inc. All Rights Reserved.

58.135 iPad Air (3rd generation) with Wi-Fi + Cellular 2 of 3

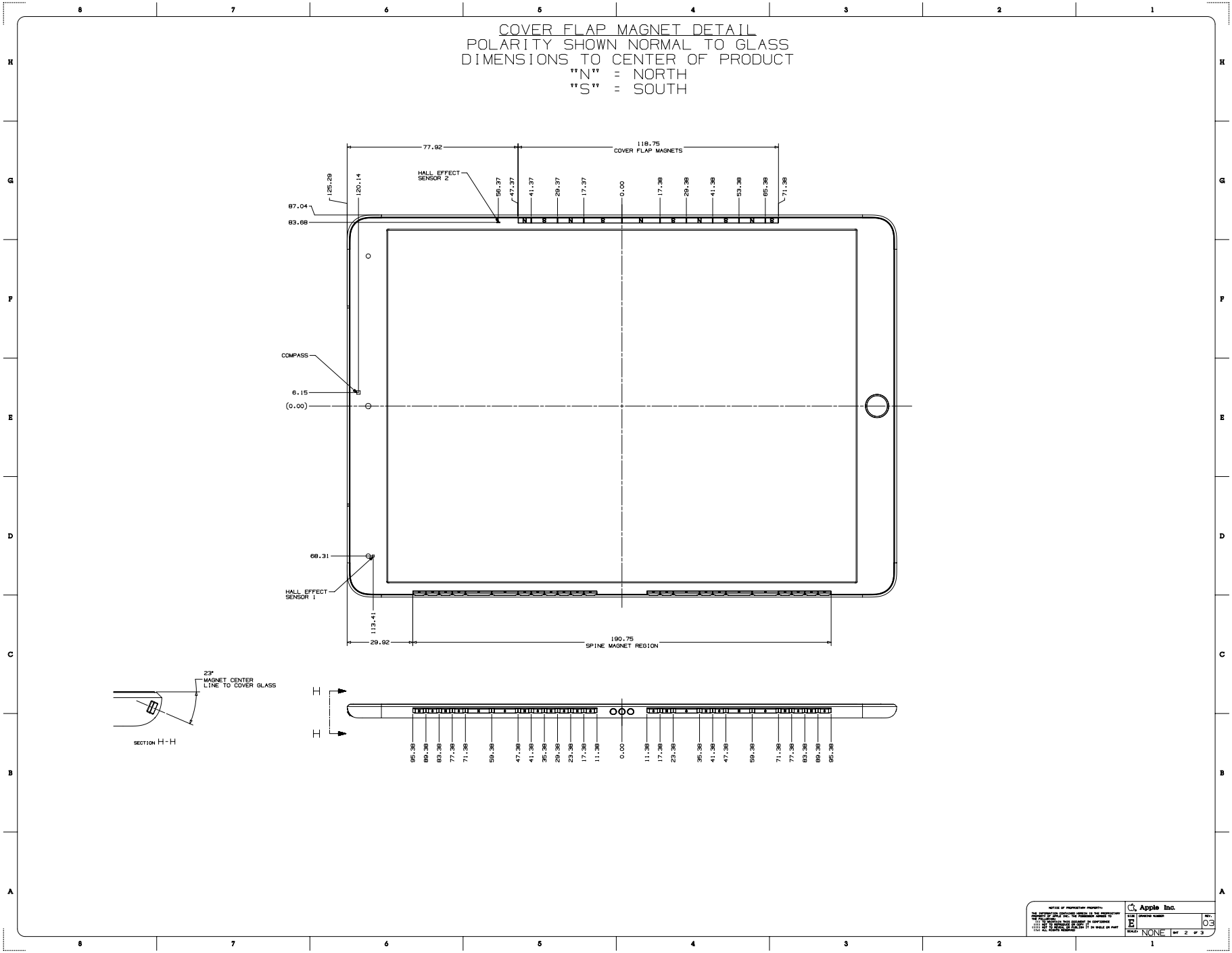

Copyright © 2024 Apple Inc. All Rights Reserved.

58.136 iPad Air (3rd generation) with Wi-Fi + Cellular 3 of 3

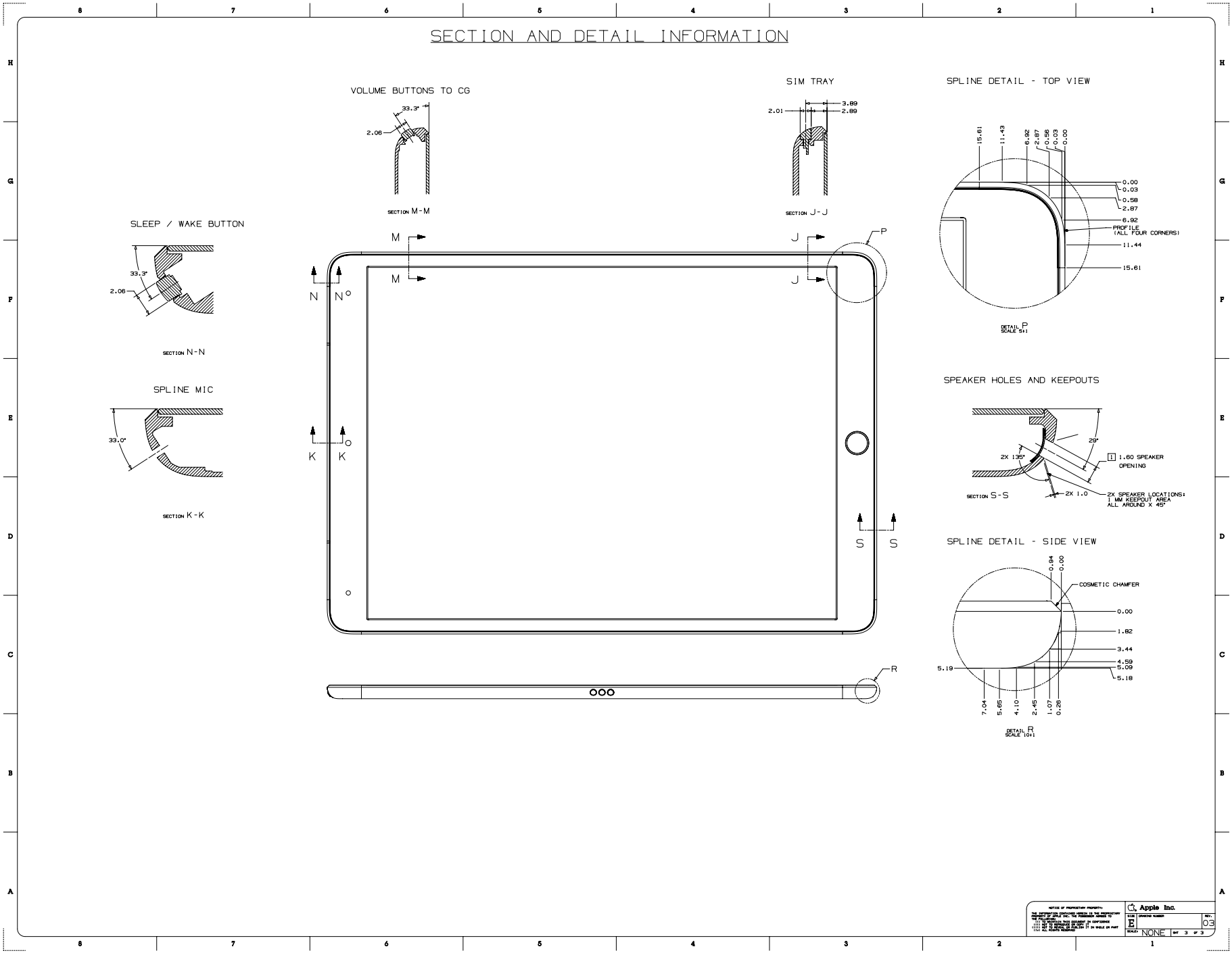

Copyright © 2024 Apple Inc. All Rights Reserved.

58.137 iPad mini (5th generation) with Wi-Fi 1 of 3

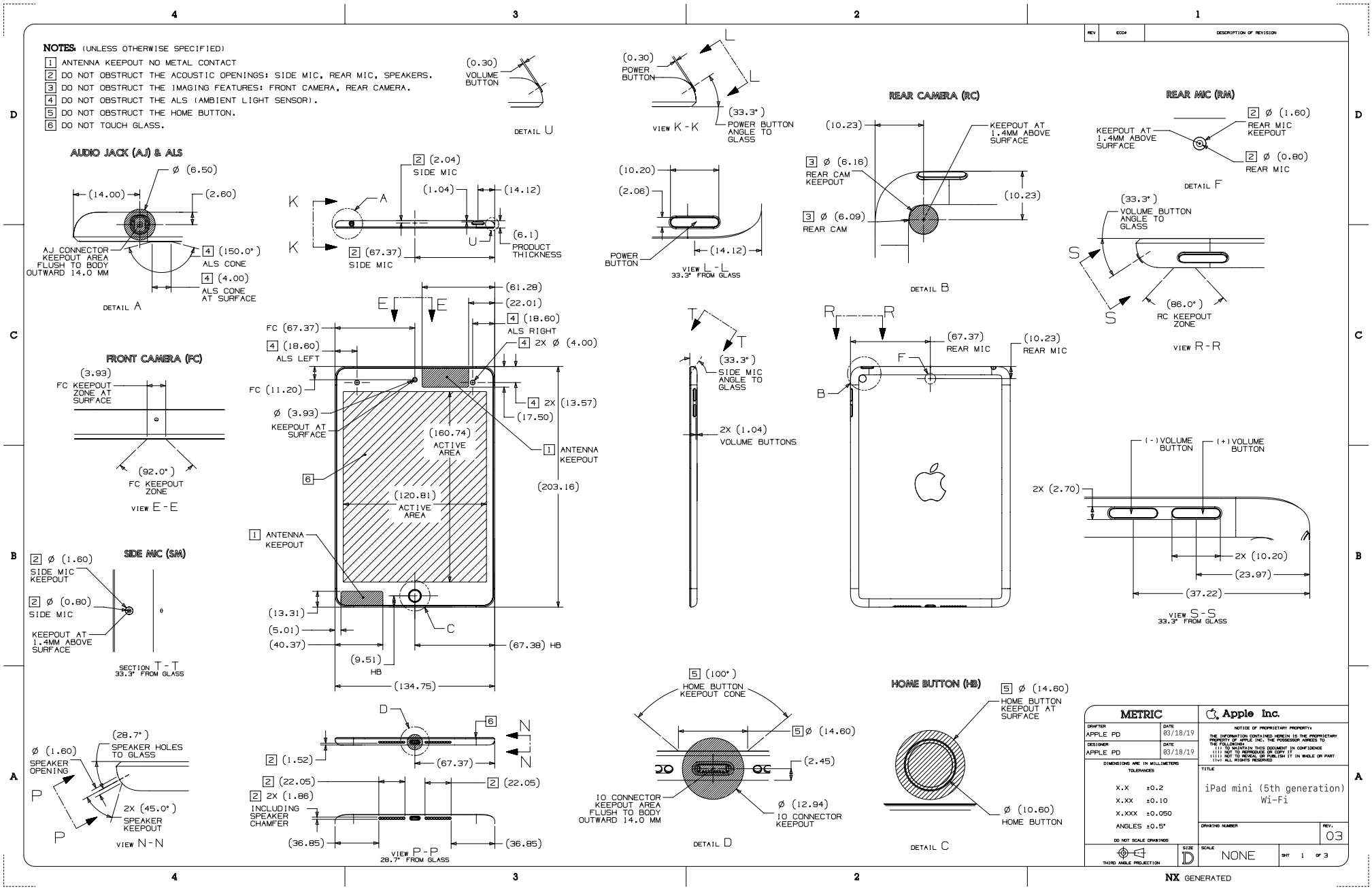

Copyright © 2024 Apple Inc. All Rights Reserved.

58.138 iPad mini (5th generation) with Wi-Fi 2 of 3

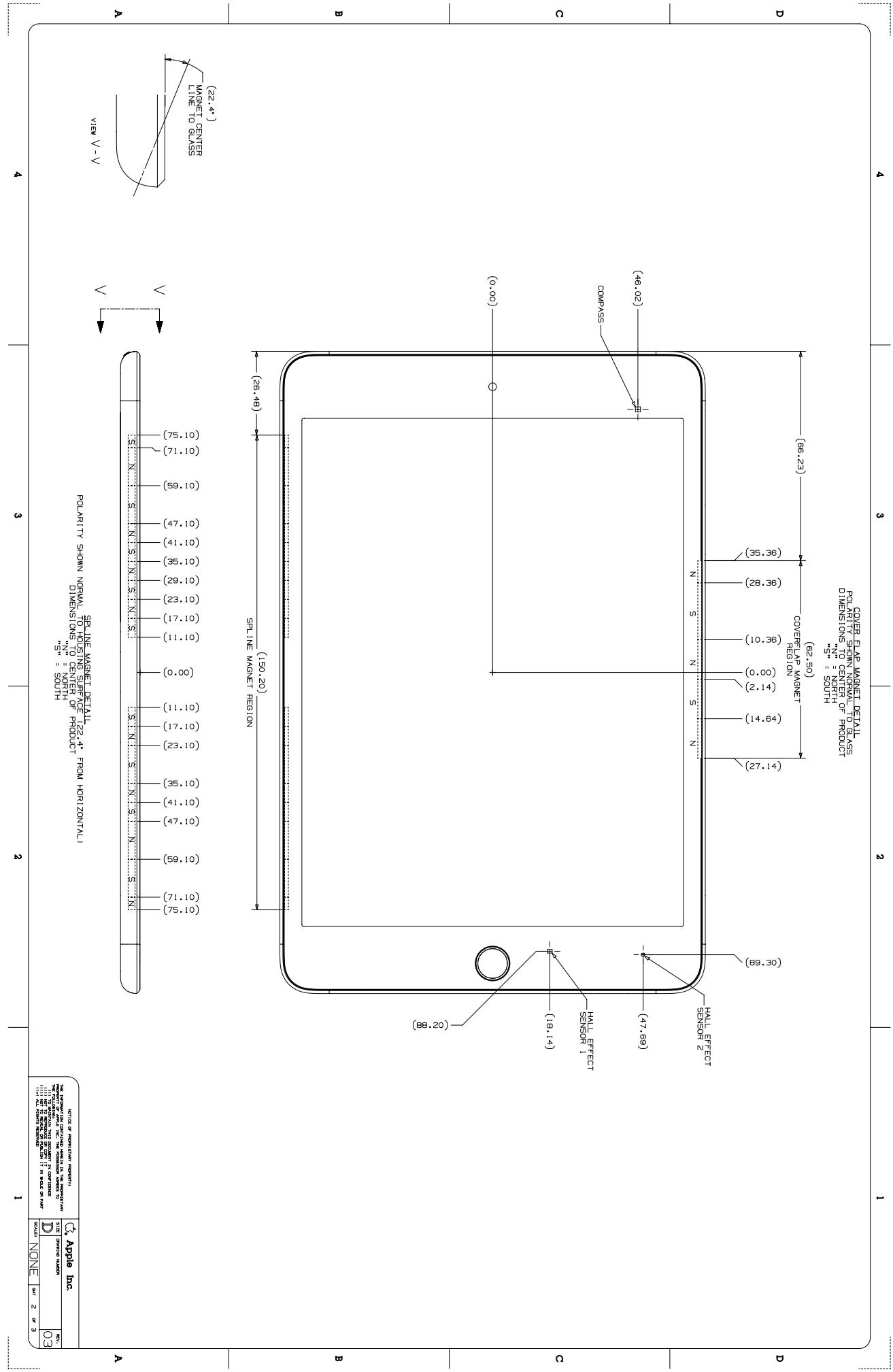

2024-05-13 | Copyright © 2024 Apple Inc. All Rights Reserved.

58.139 iPad mini (5th generation) with Wi-Fi 3 of 3

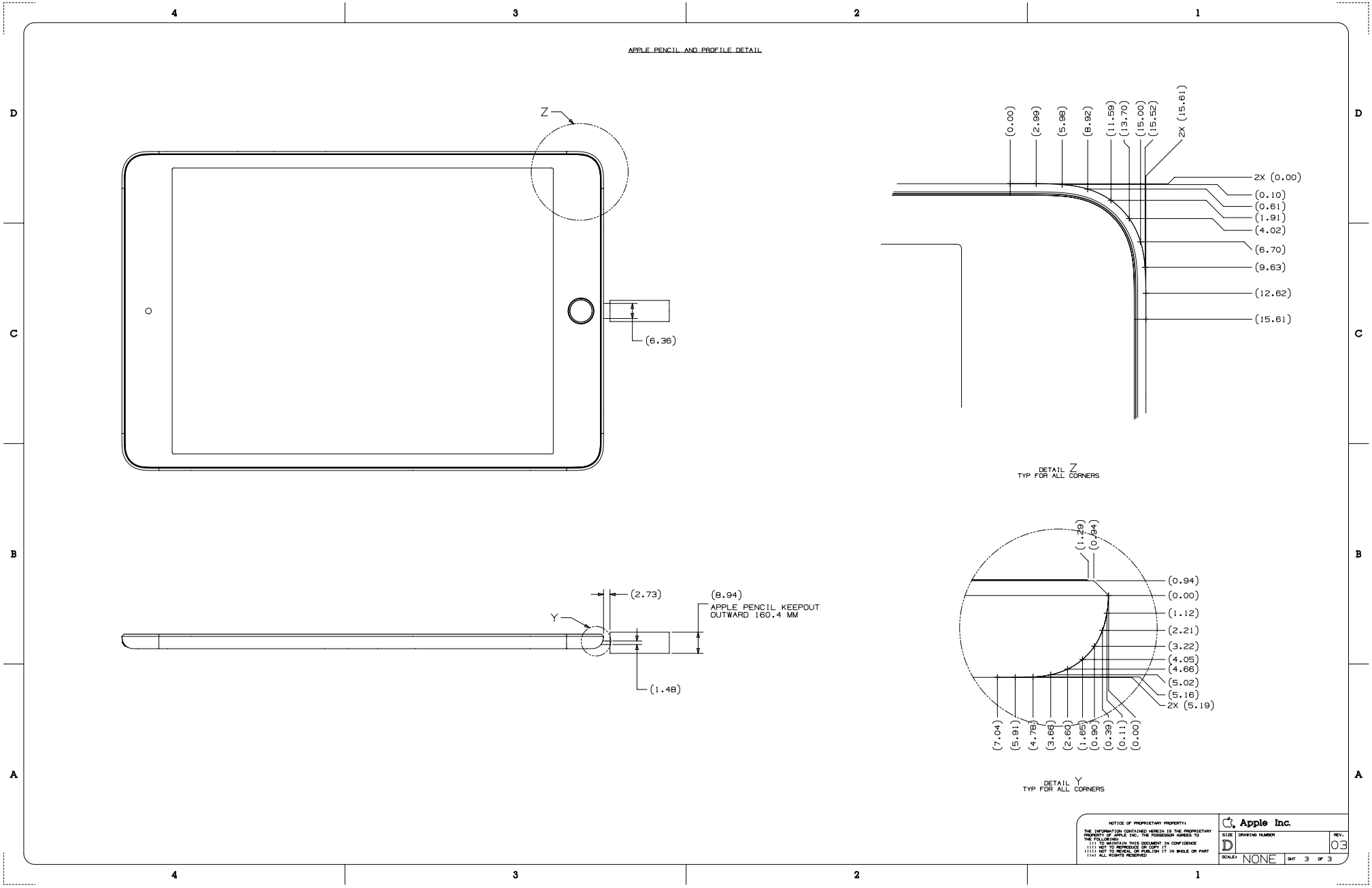

Copyright © 2024 Apple Inc. All Rights Reserved.

58.140 iPad mini (5th generation) with Wi-Fi + Cellular 1 of 3

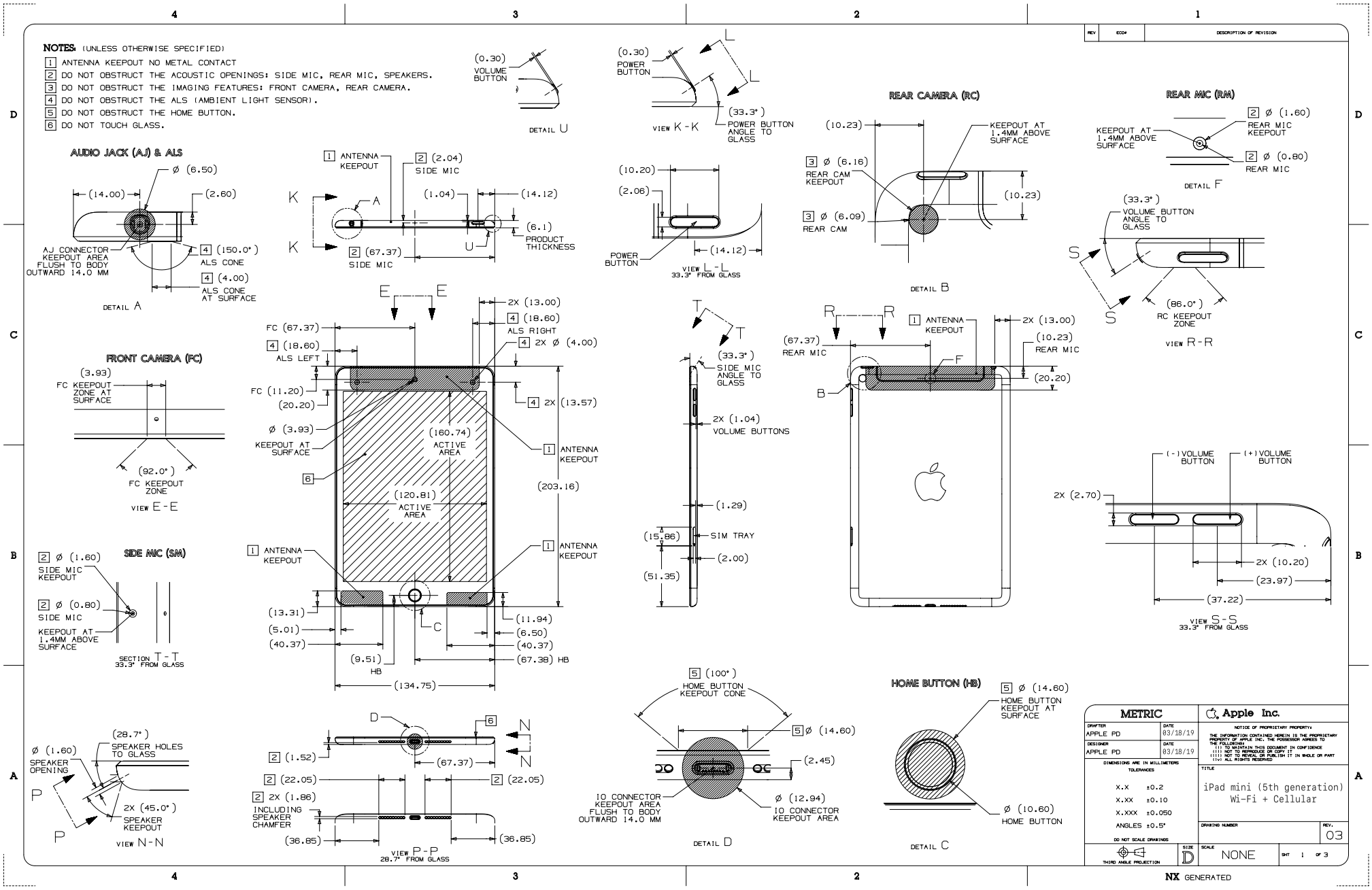

58.141 iPad mini (5th generation) with Wi-Fi + Cellular 2 of 3

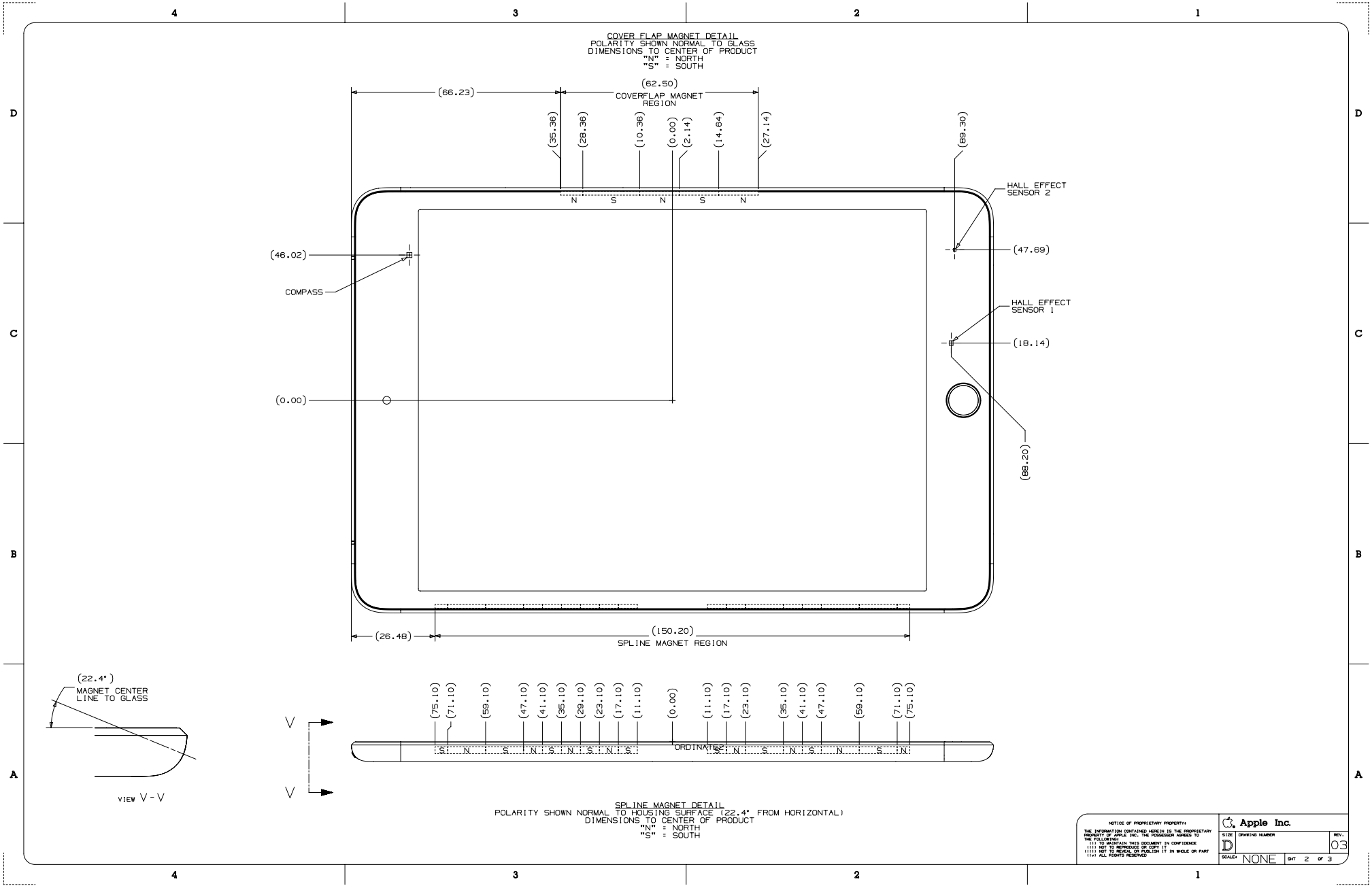

58.142 iPad mini (5th generation) with Wi-Fi + Cellular 3 of 3

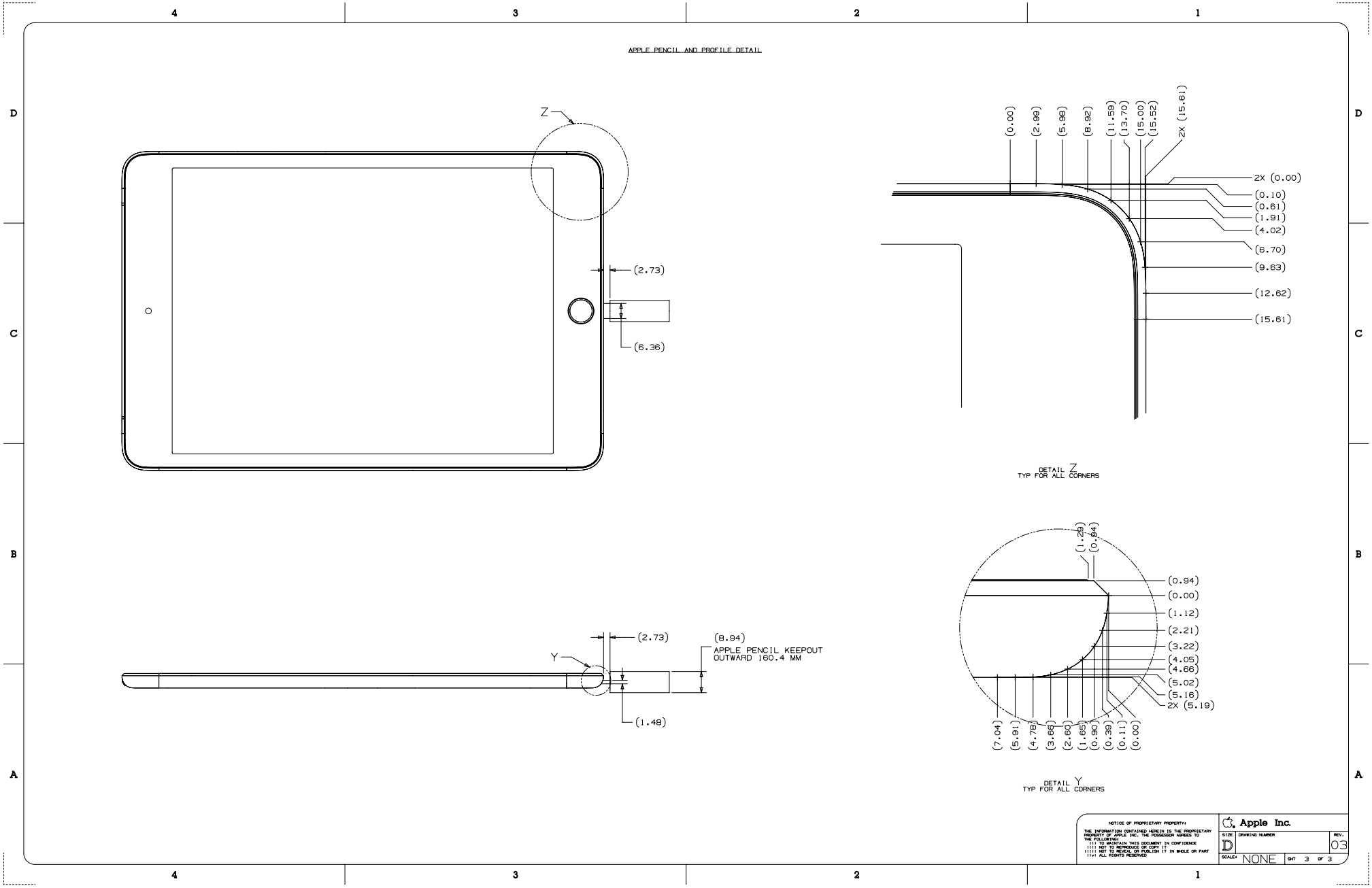

58.143 iPad Pro 12.9-inch (3rd generation) 1 of 3

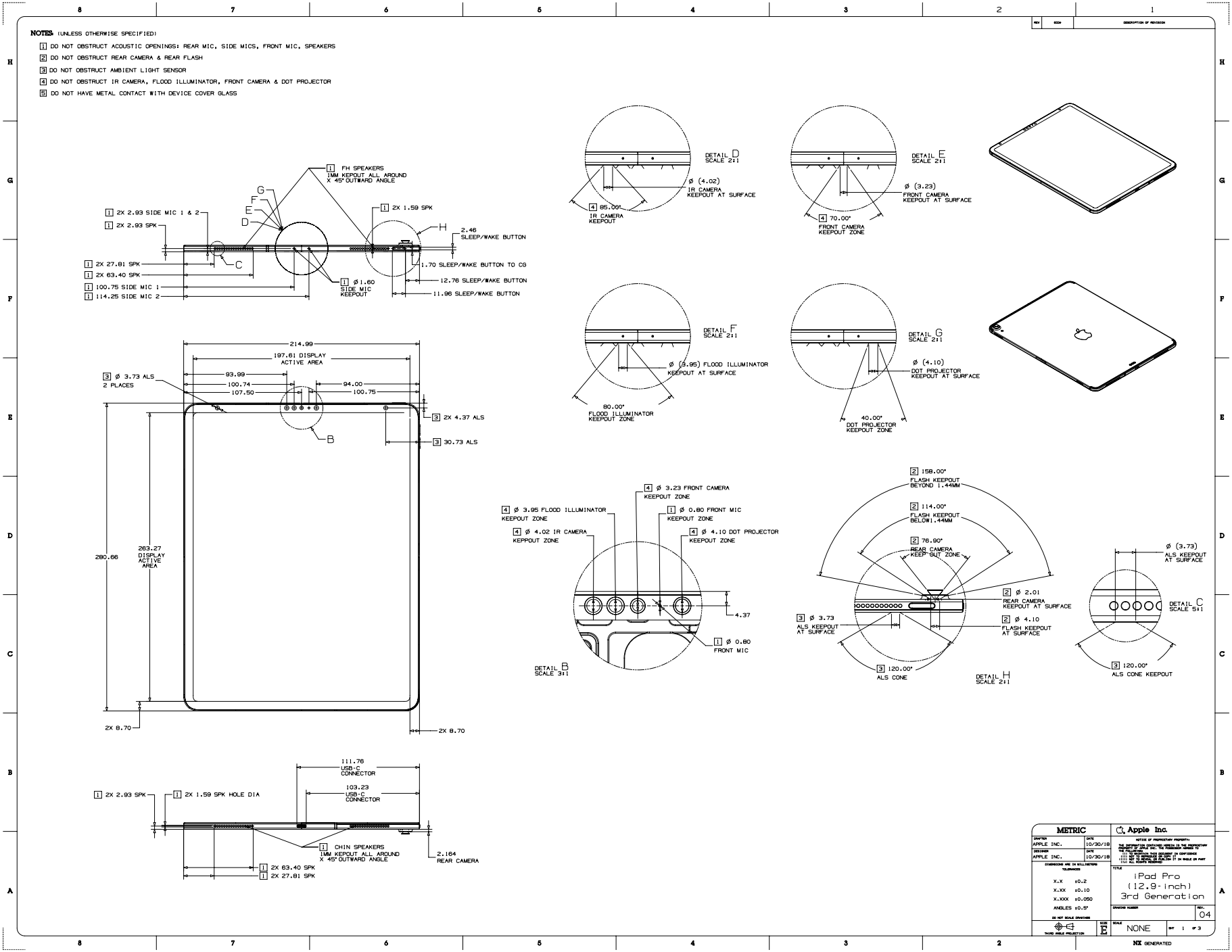

Copyright © 2024 Apple Inc. All Rights Reserved.

58.144 iPad Pro 12.9-inch (3rd generation) 2 of 3

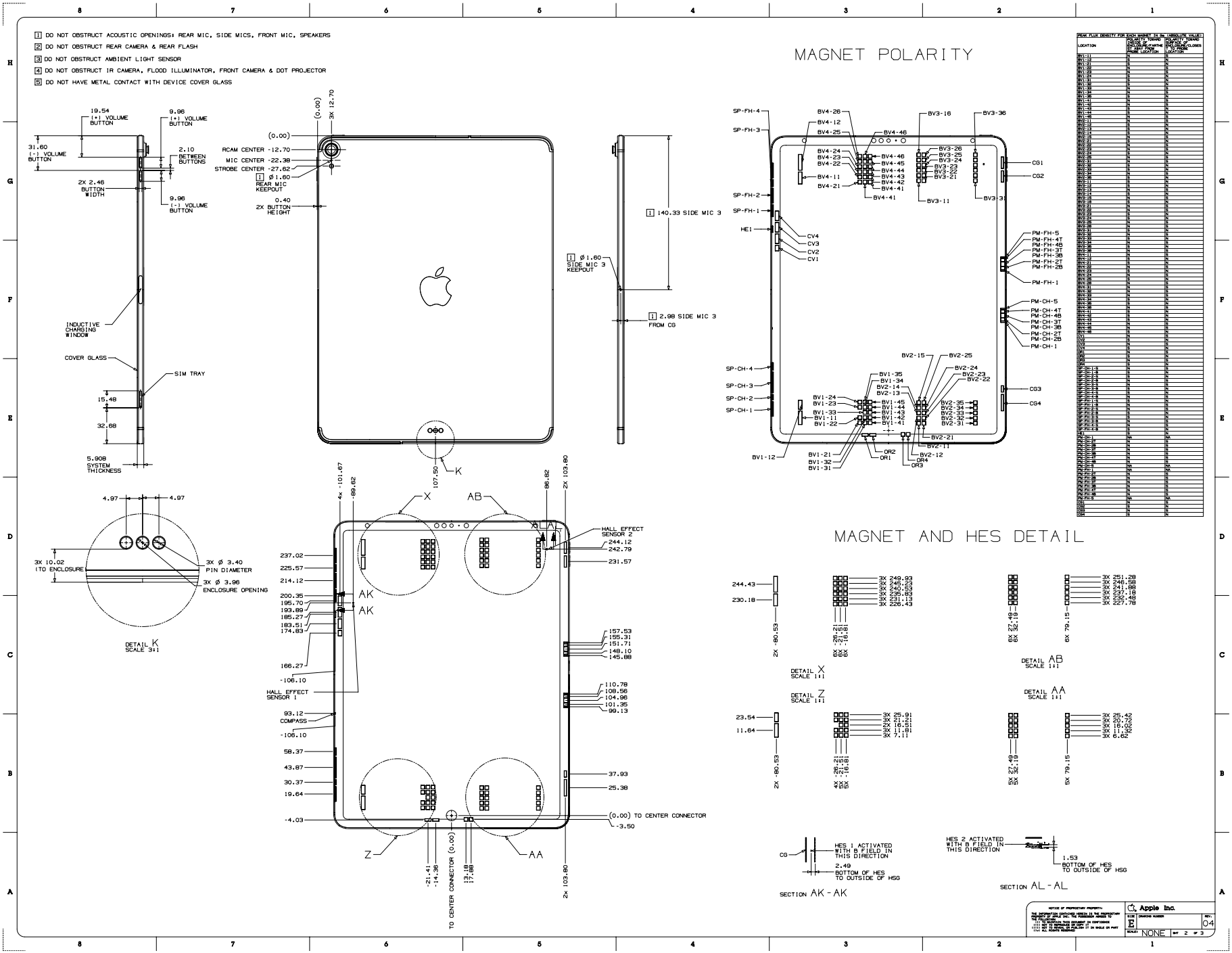

Copyright © 2024 Apple Inc. All Rights Reserved.

58.145 iPad Pro 12.9-inch (3rd generation) 3 of 3

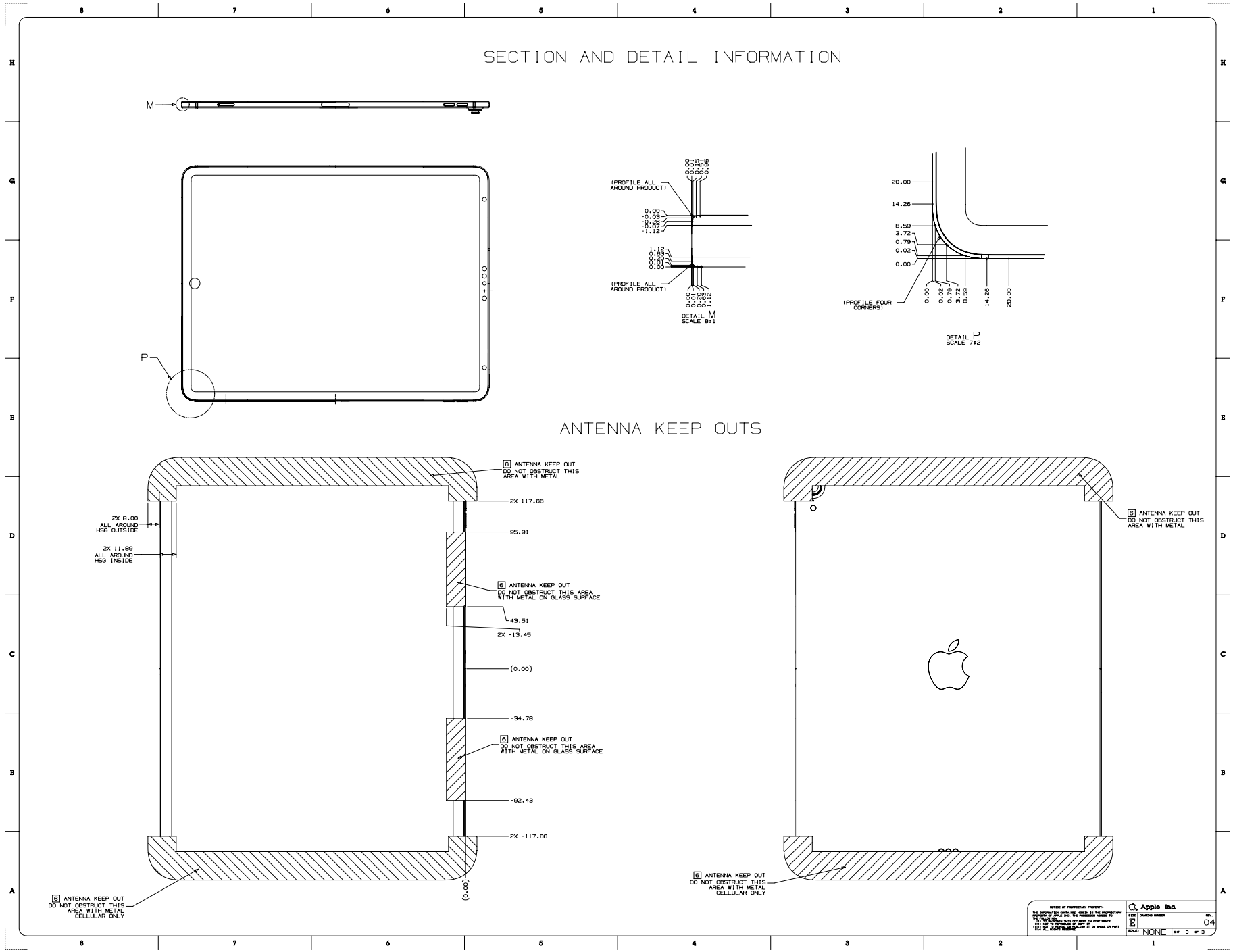

Copyright © 2024 Apple Inc. All Rights Reserved.

58.146 iPad Pro 11-inch (1st generation) 1 of 3

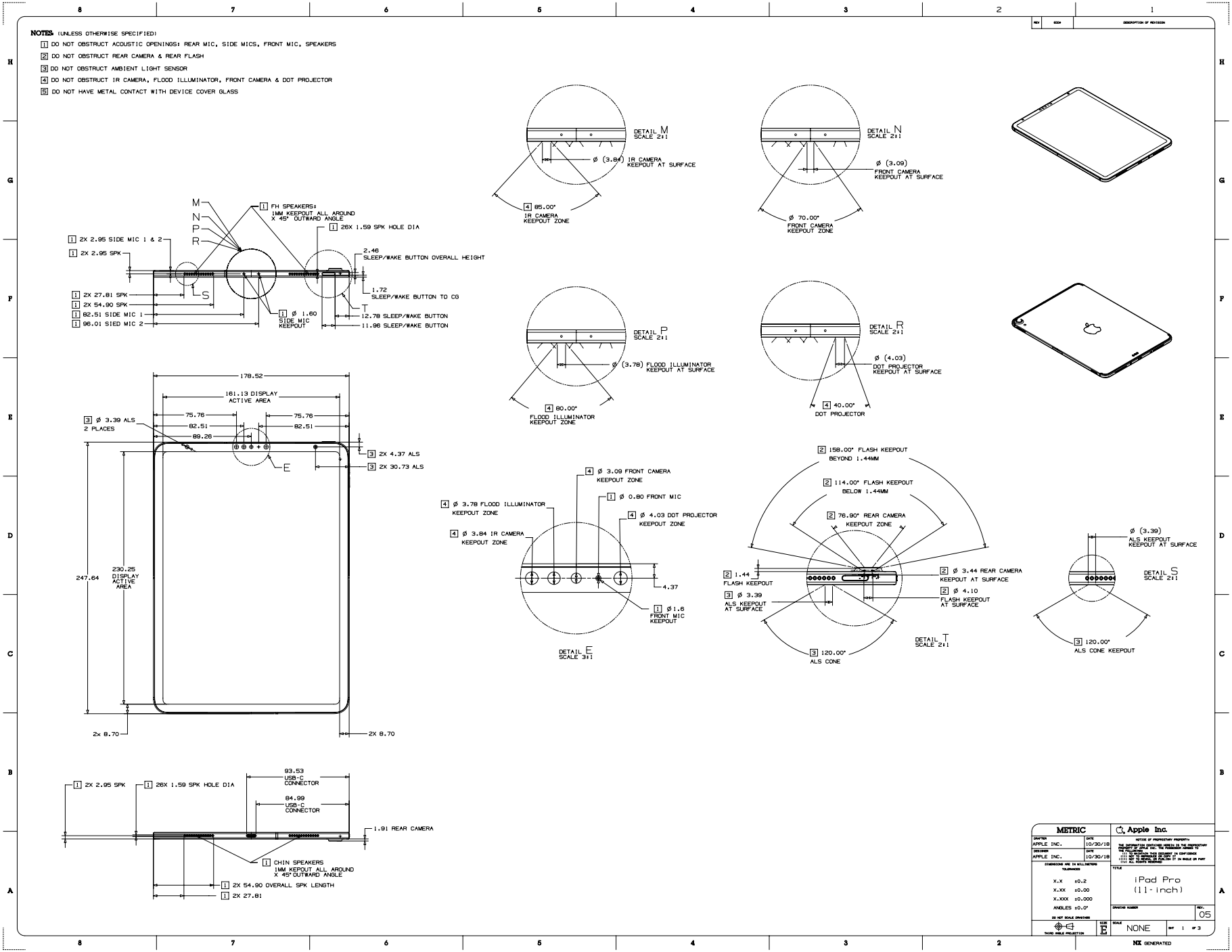

Copyright © 2024 Apple Inc. All Rights Reserved.

58.147 iPad Pro 11-inch (1st generation) 2 of 3

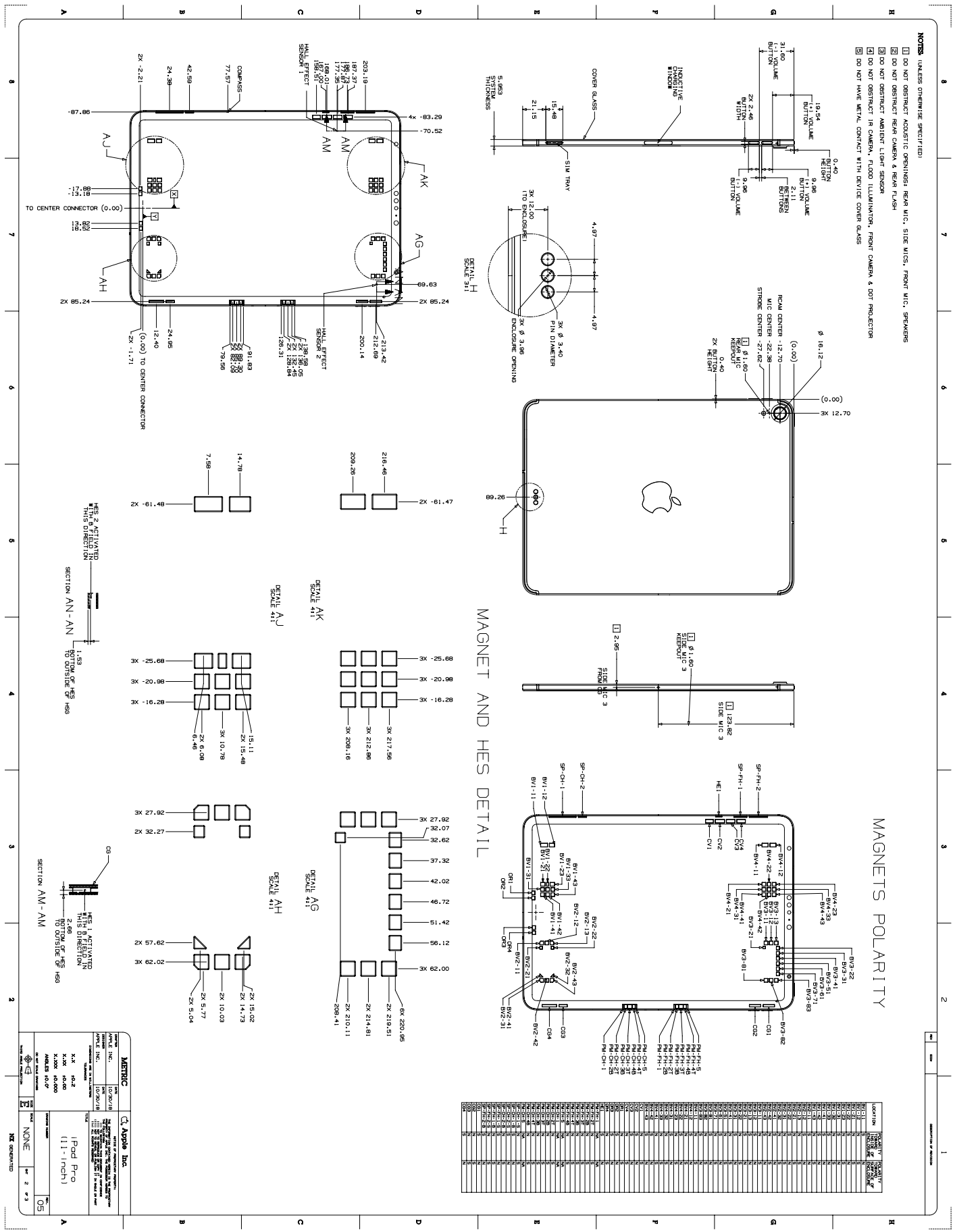

2024-05-13 | Copyright © 2024 Apple Inc. All Rights Reserved.

58.148 iPad Pro 11-inch (1st generation) 3 of 3

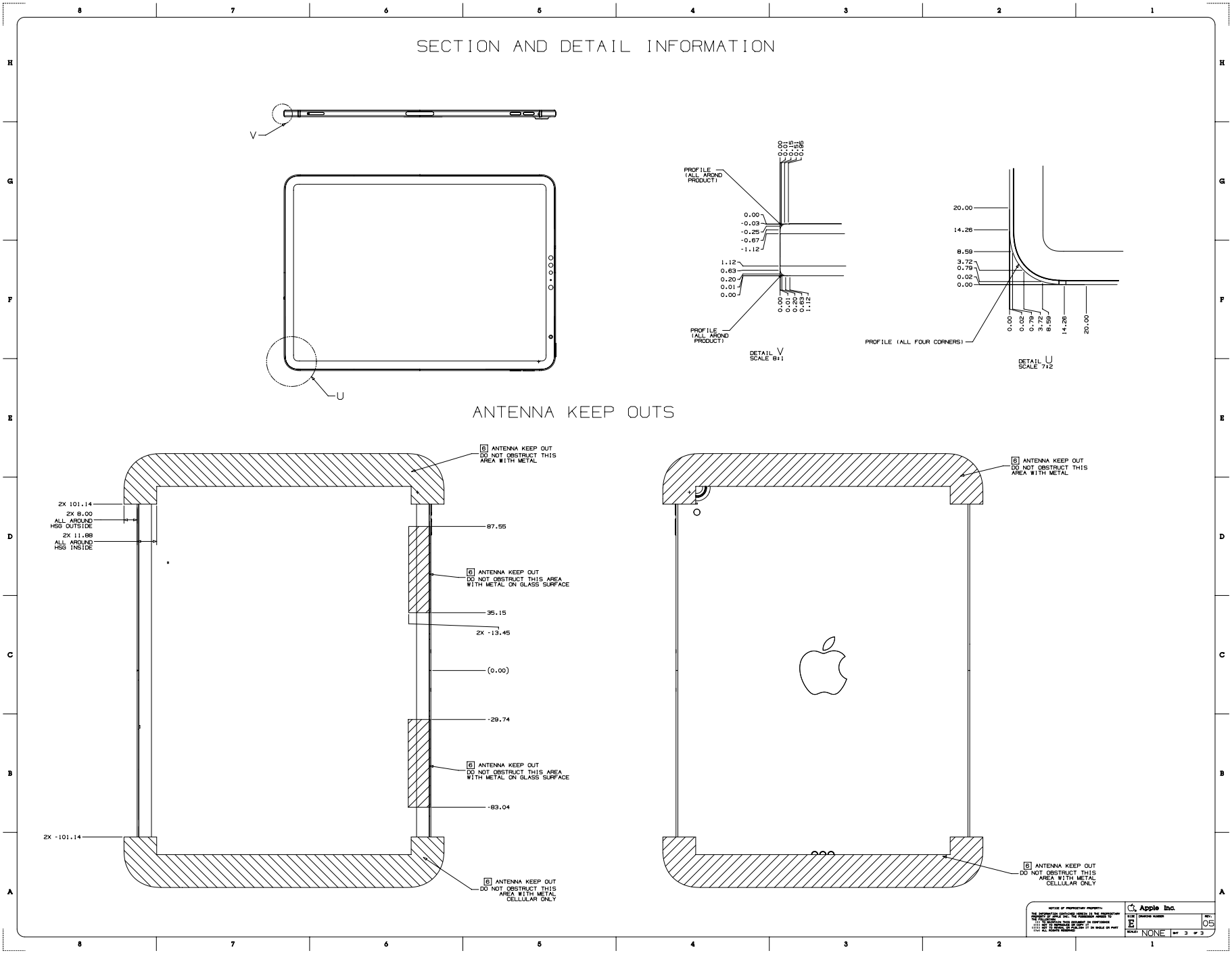

 Copyright © 2024 Apple Inc. All Rights Reserved.

58.149 iPad Pro 12.9-inch (2nd generation) with Wi-Fi

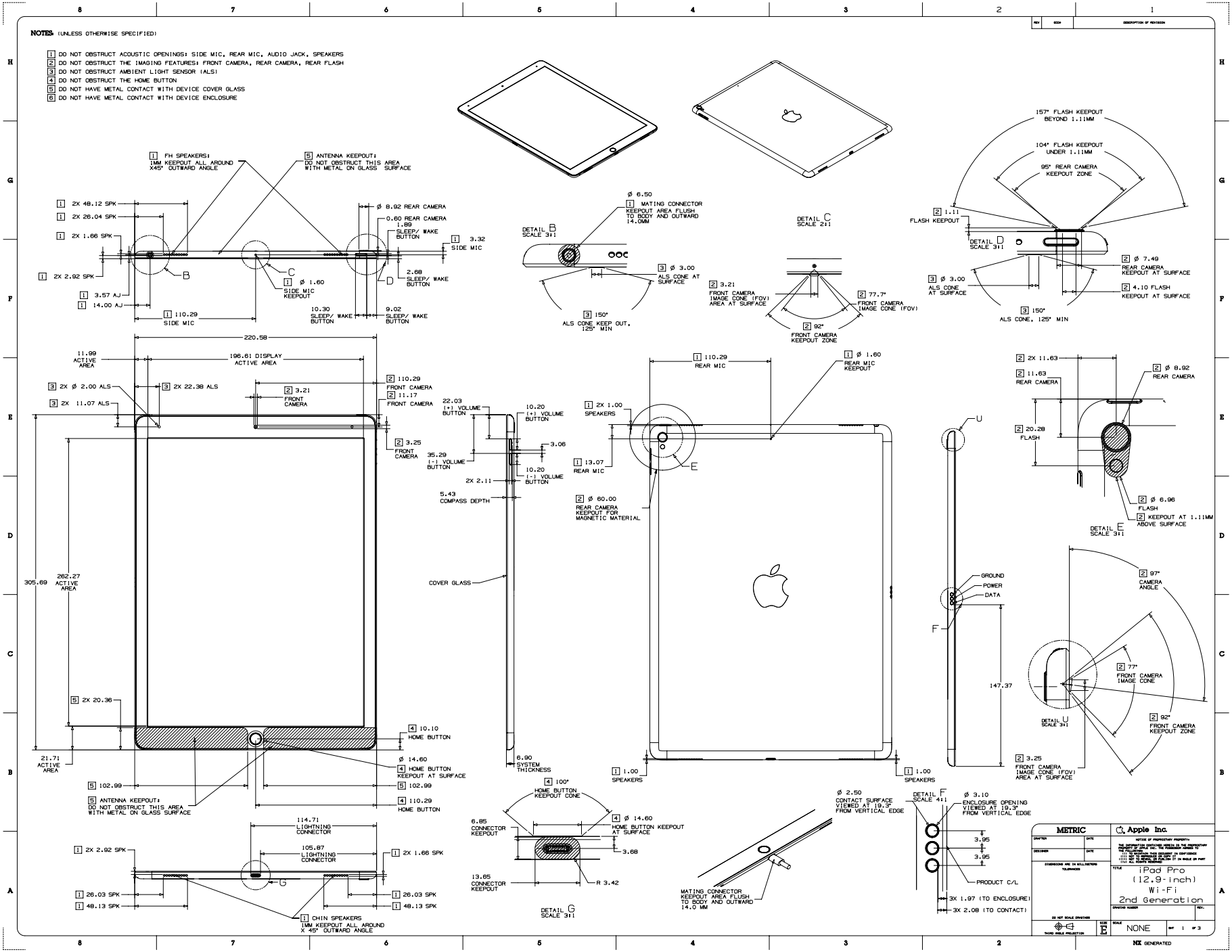

Copyright © 2024 Apple Inc. All Rights Reserved.

58.150 iPad Pro 12.9-inch (2nd generation) with Wi-Fi + Cellular

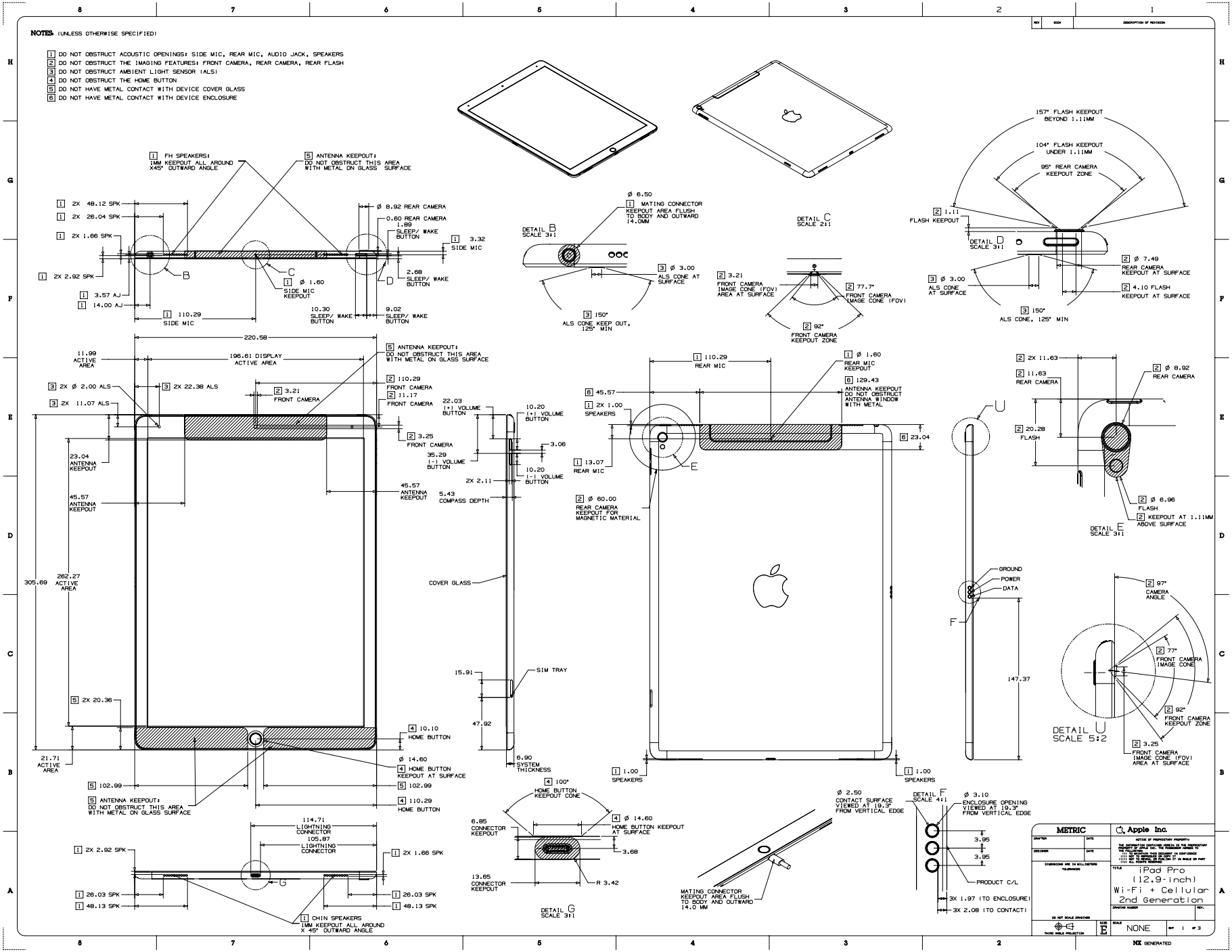

Copyright © 2024 Apple Inc. All Rights Reserved.

58.151 iPad Pro 12.9-inch (2nd generation) Magnet/Hall Effect Sensors 1 of 2

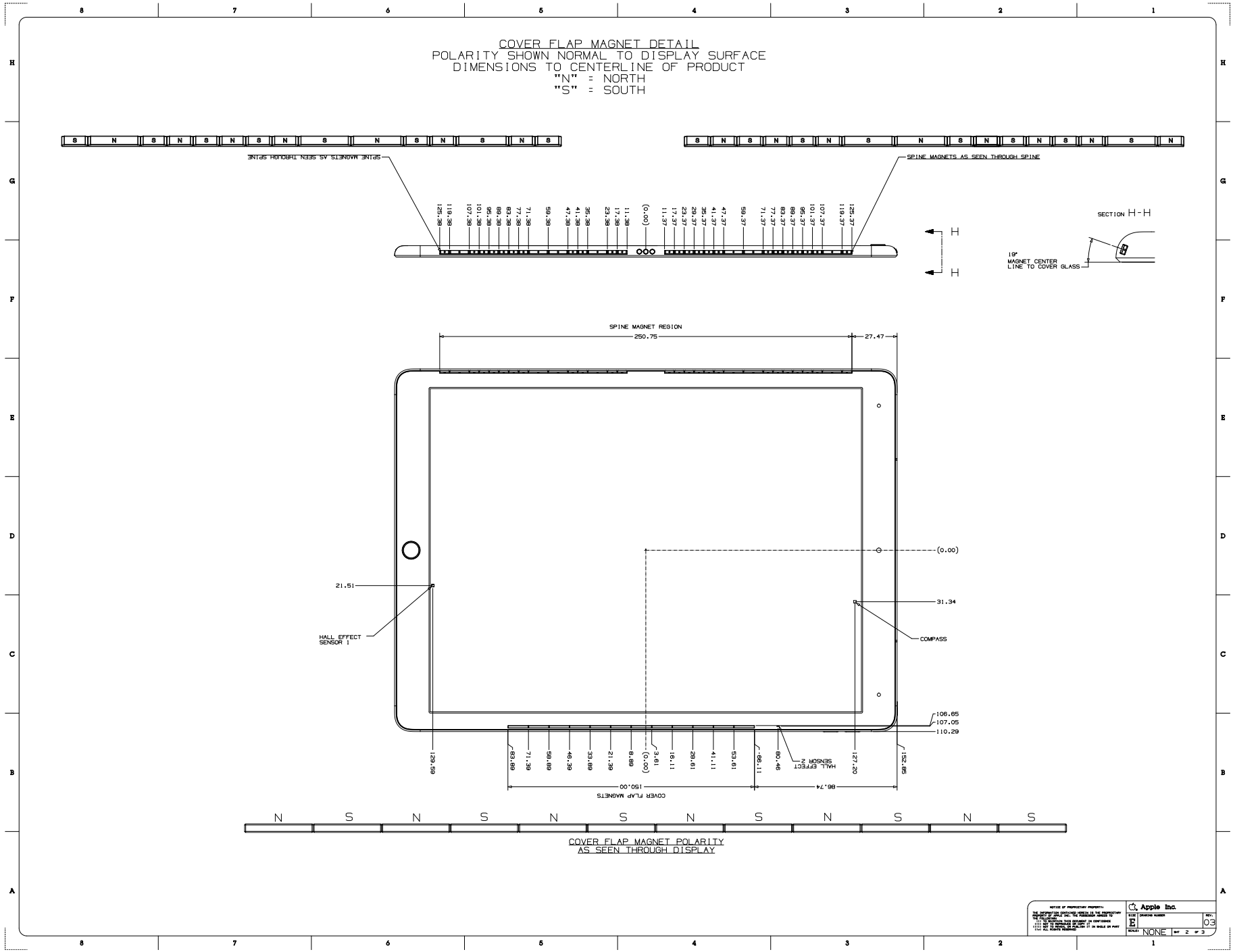

Copyright © 2024 Apple Inc. All Rights Reserved.

58.152 iPad Pro 12.9-inch (2nd generation) Magnet/Hall Effect Sensors 2 of 2

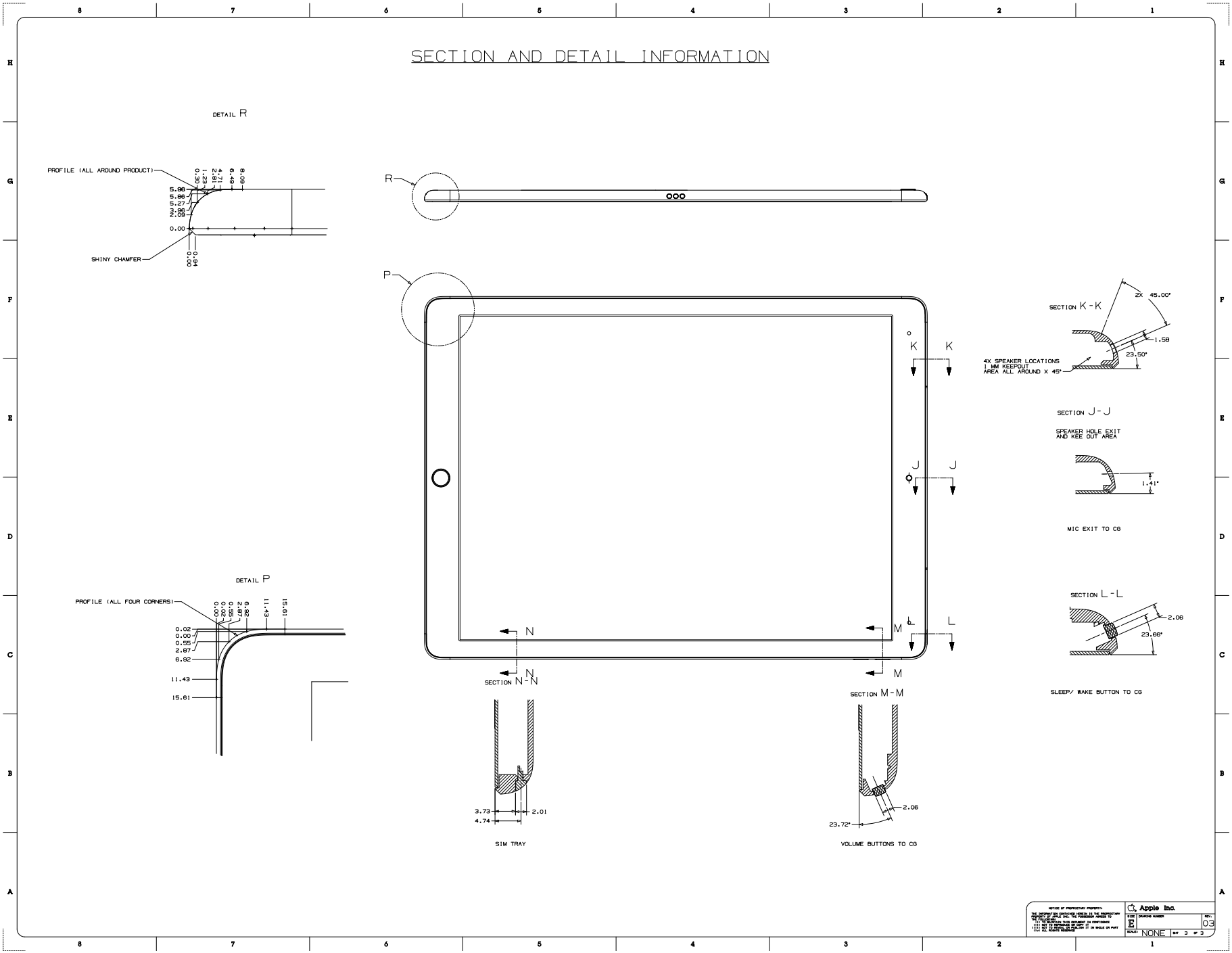

 Copyright © 2024 Apple Inc. All Rights Reserved.

58.153 iPad Pro 10.5-inch with Wi-Fi

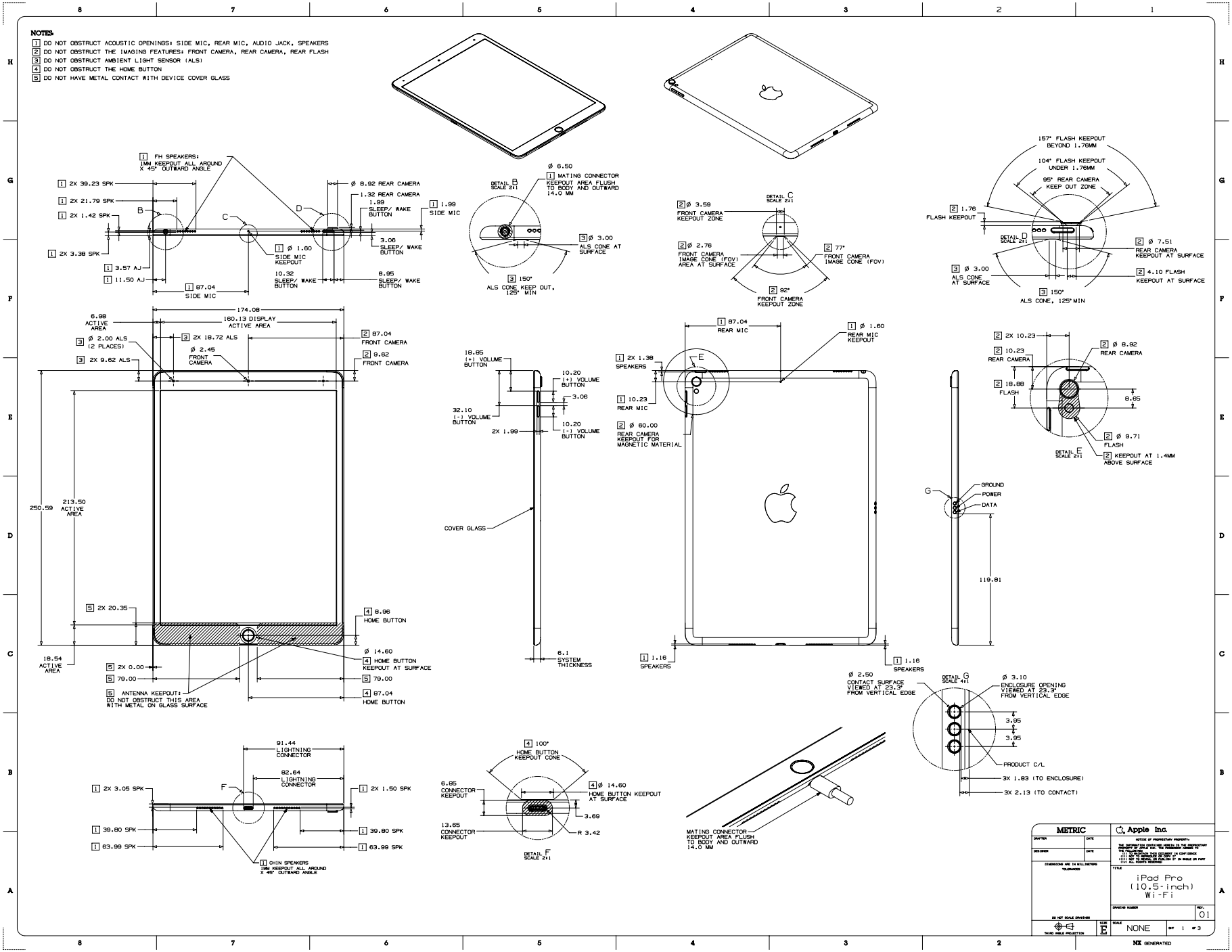

58.154 iPad Pro 10.5-inch with Wi-Fi + Cellular

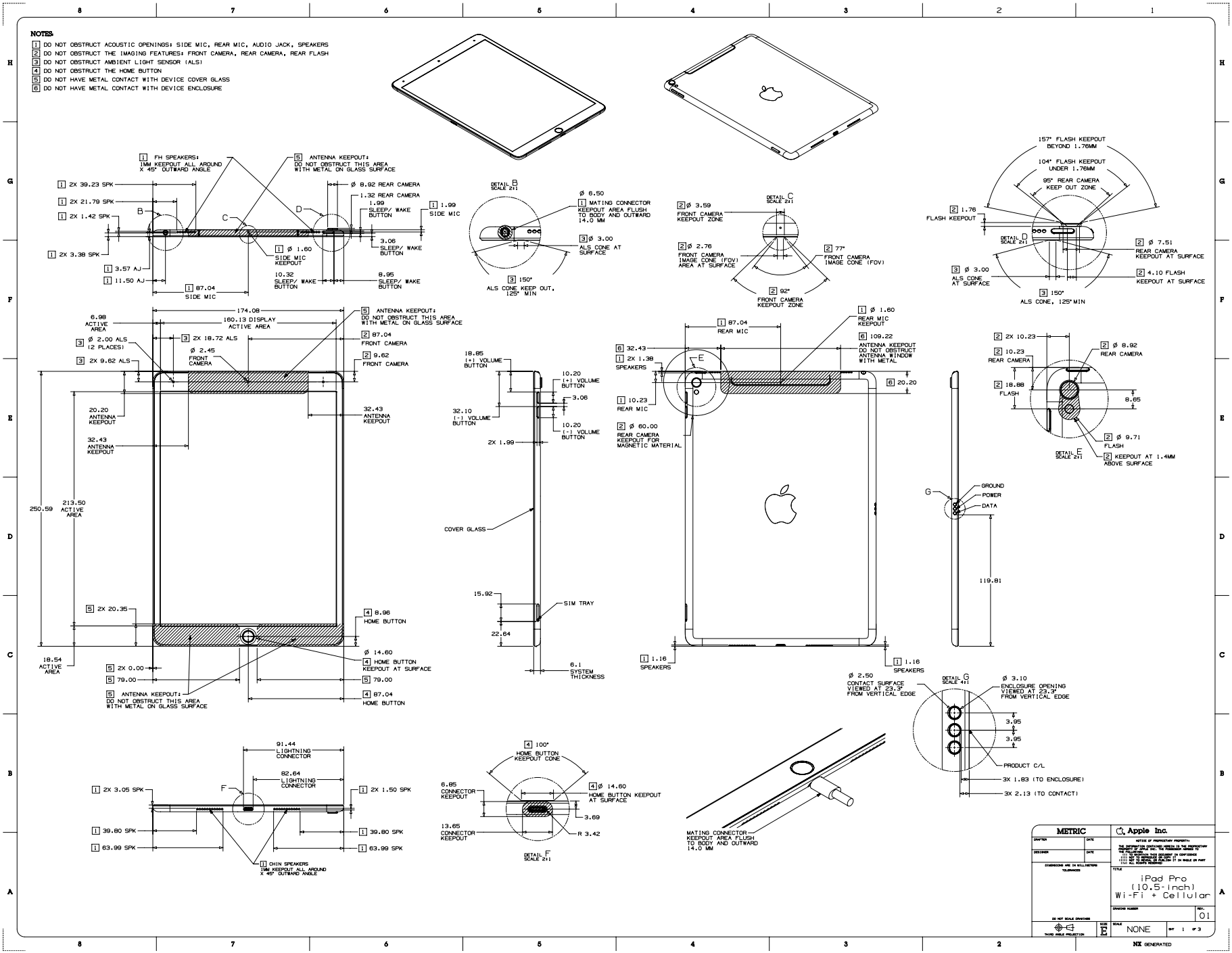

Copyright © 2024 Apple Inc. All Rights Reserved.

58.155 iPad Pro 10.5-inch Magnet/Hall Effect Sensors 1 of 2

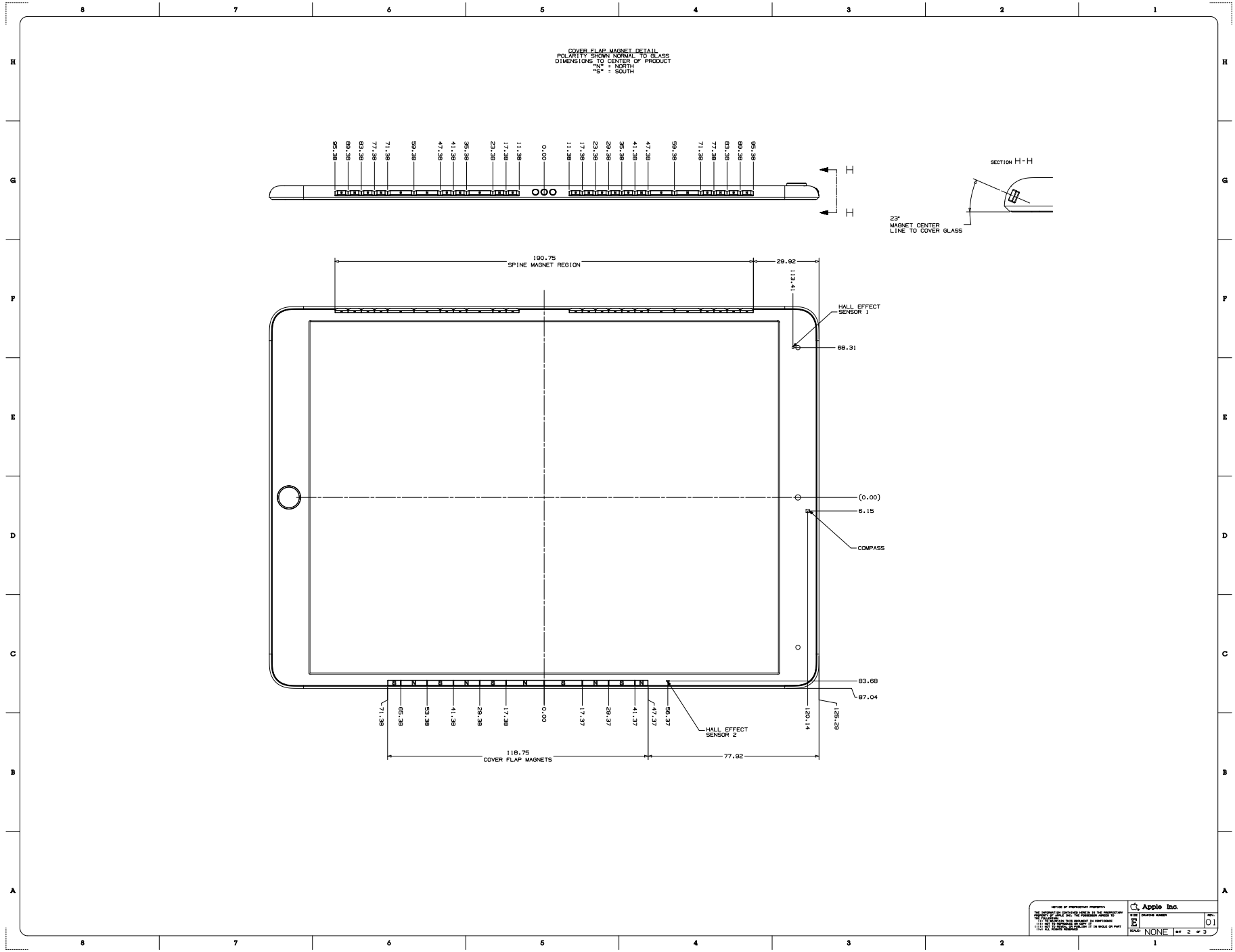

Copyright © 2024 Apple Inc. All Rights Reserved.

58.156 iPad Pro 10.5-inch Magnet/Hall Effect Sensors 2 of 2

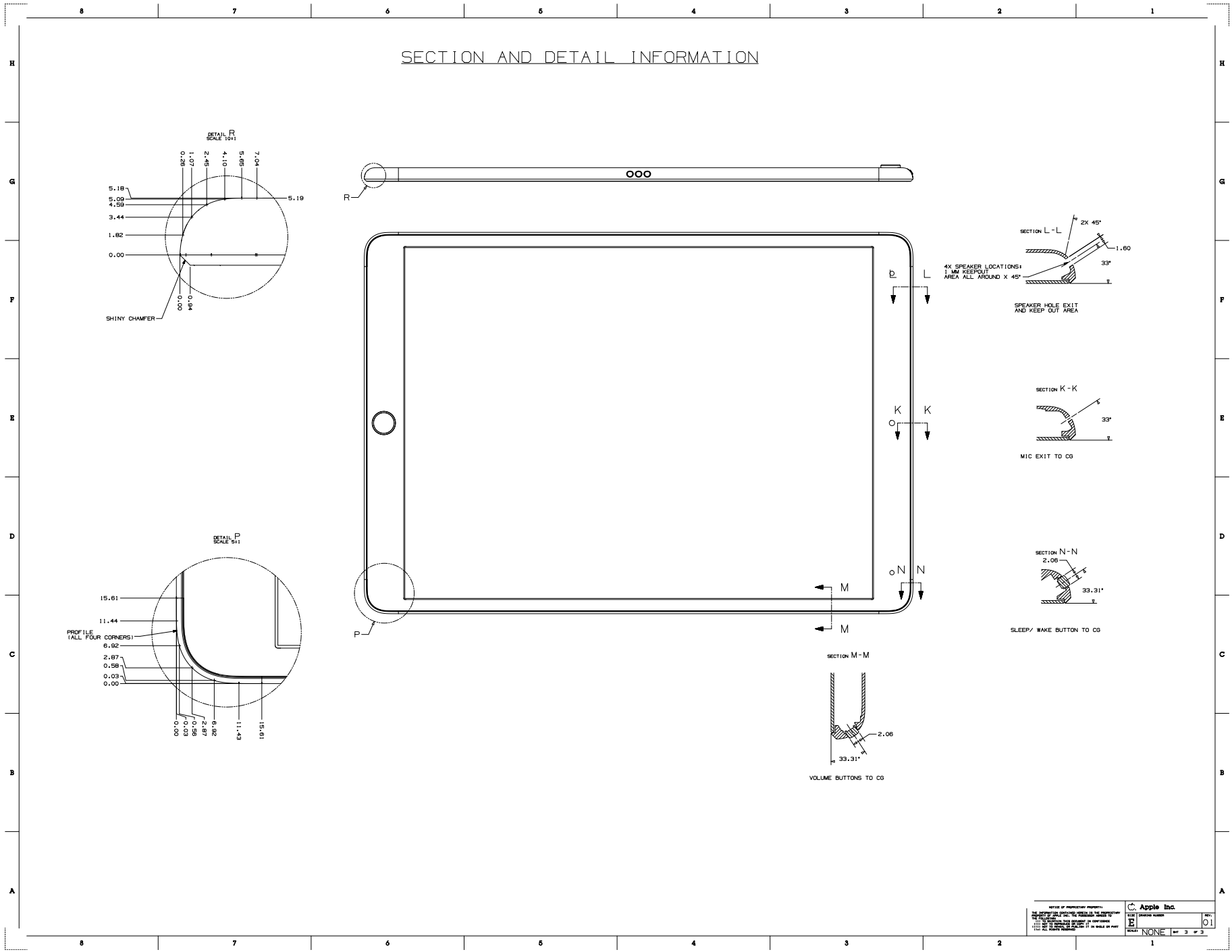

 Copyright © 2024 Apple Inc. All Rights Reserved.

58.157 iPad (5th and 6th generation) with Wi-Fi + Cellular

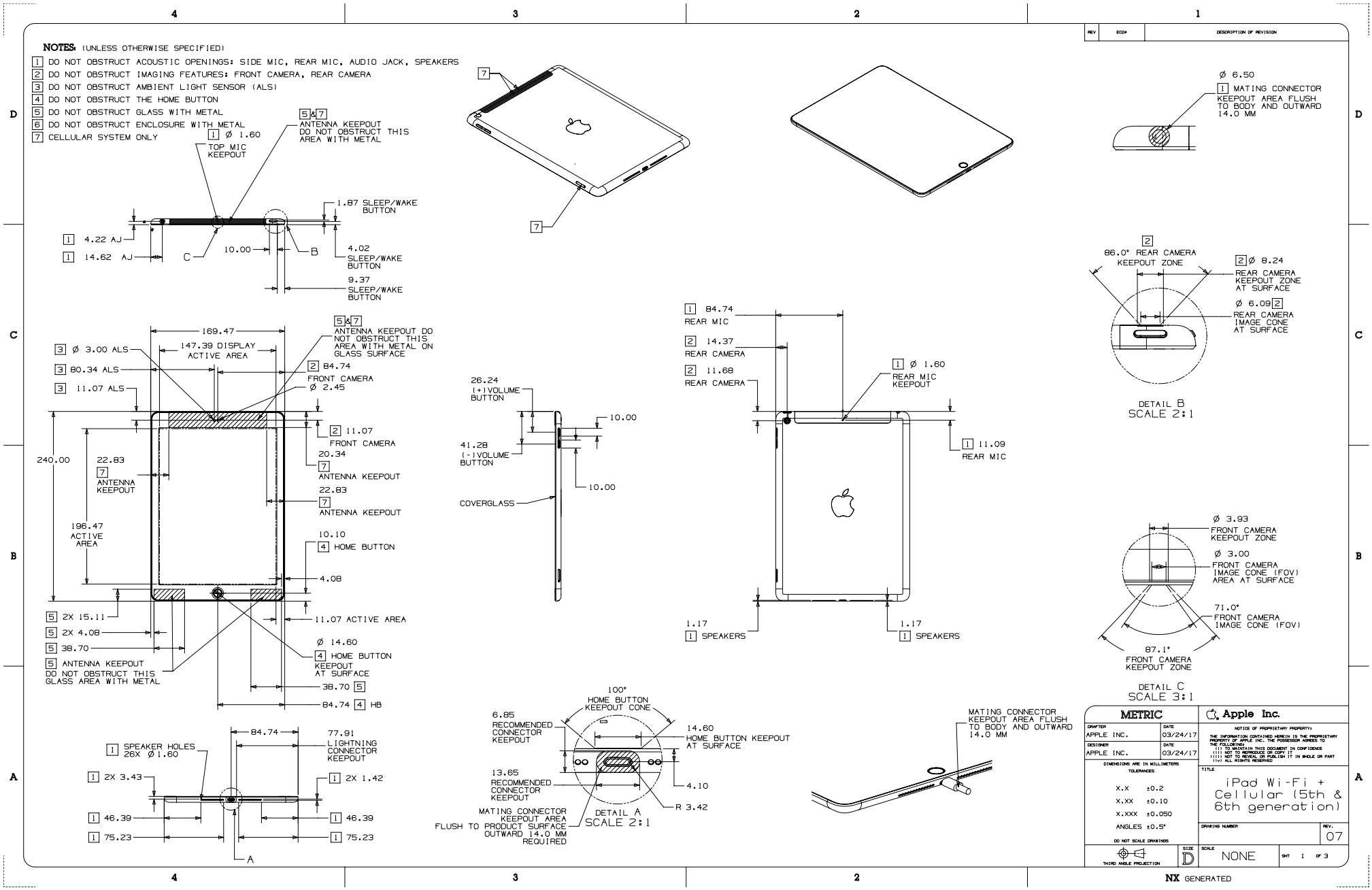

58.158 iPad (5th and 6th generation) Magnet/Hall Effect Sensors 1 of 2

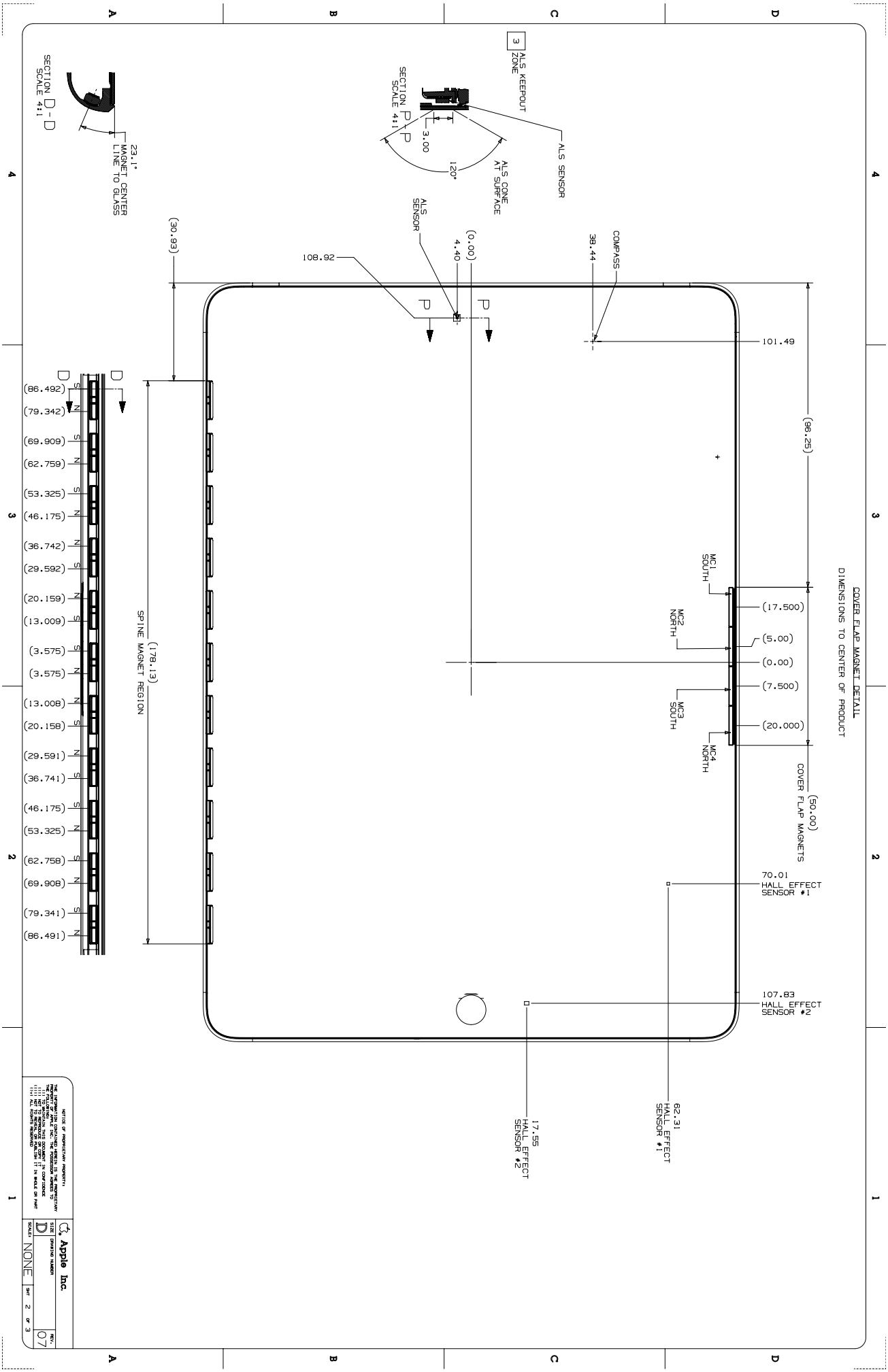

2024-05-13 | Copyright © 2024 Apple Inc. All Rights Reserved.

58.159 iPad (5th and 6th generation) Magnet/Hall Effect Sensors 2 of 2

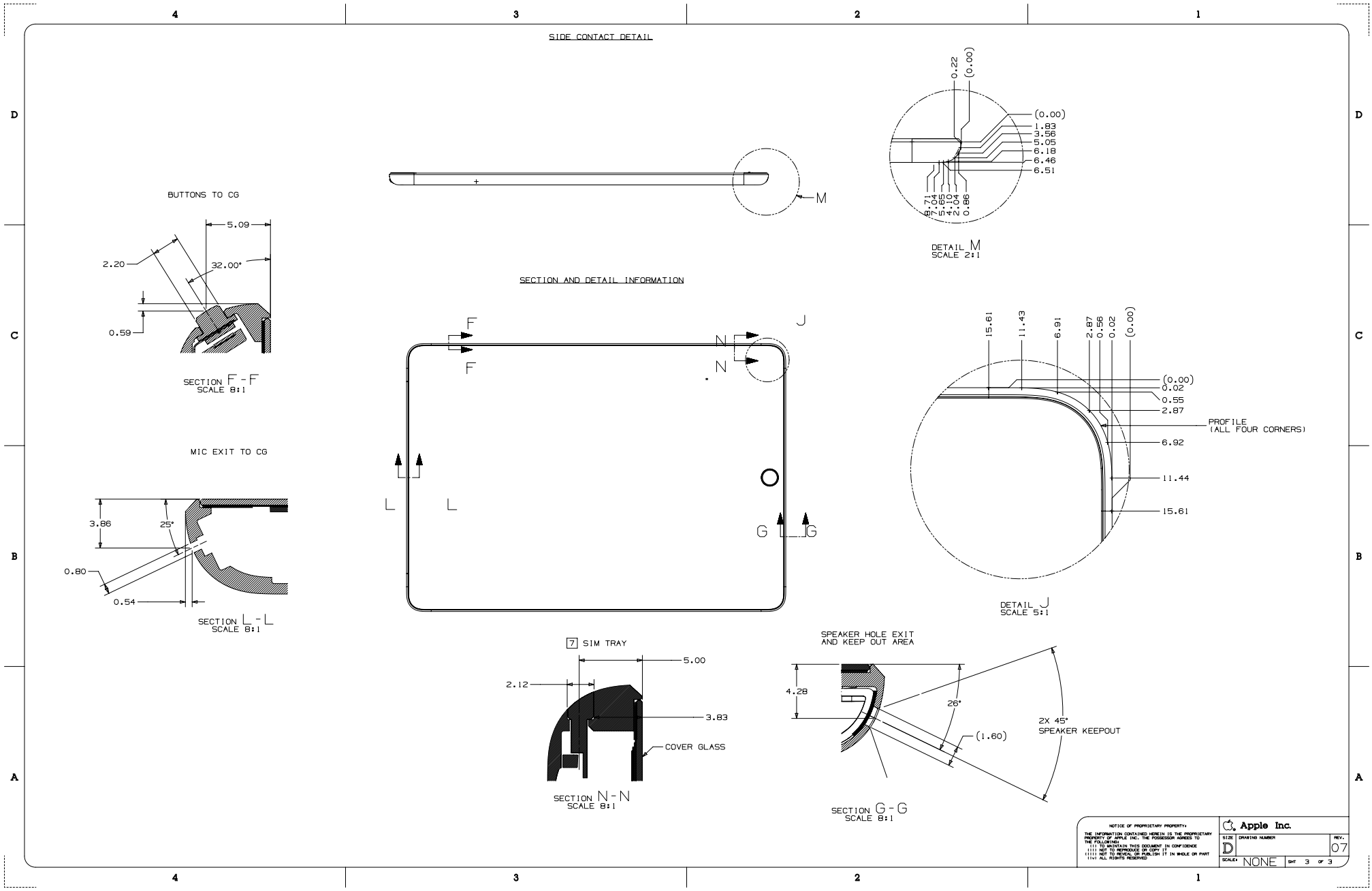

Copyright © 2024 Apple Inc. All Rights Reserved.

58.160 iPad Pro 9.7-inch with Wi-Fi

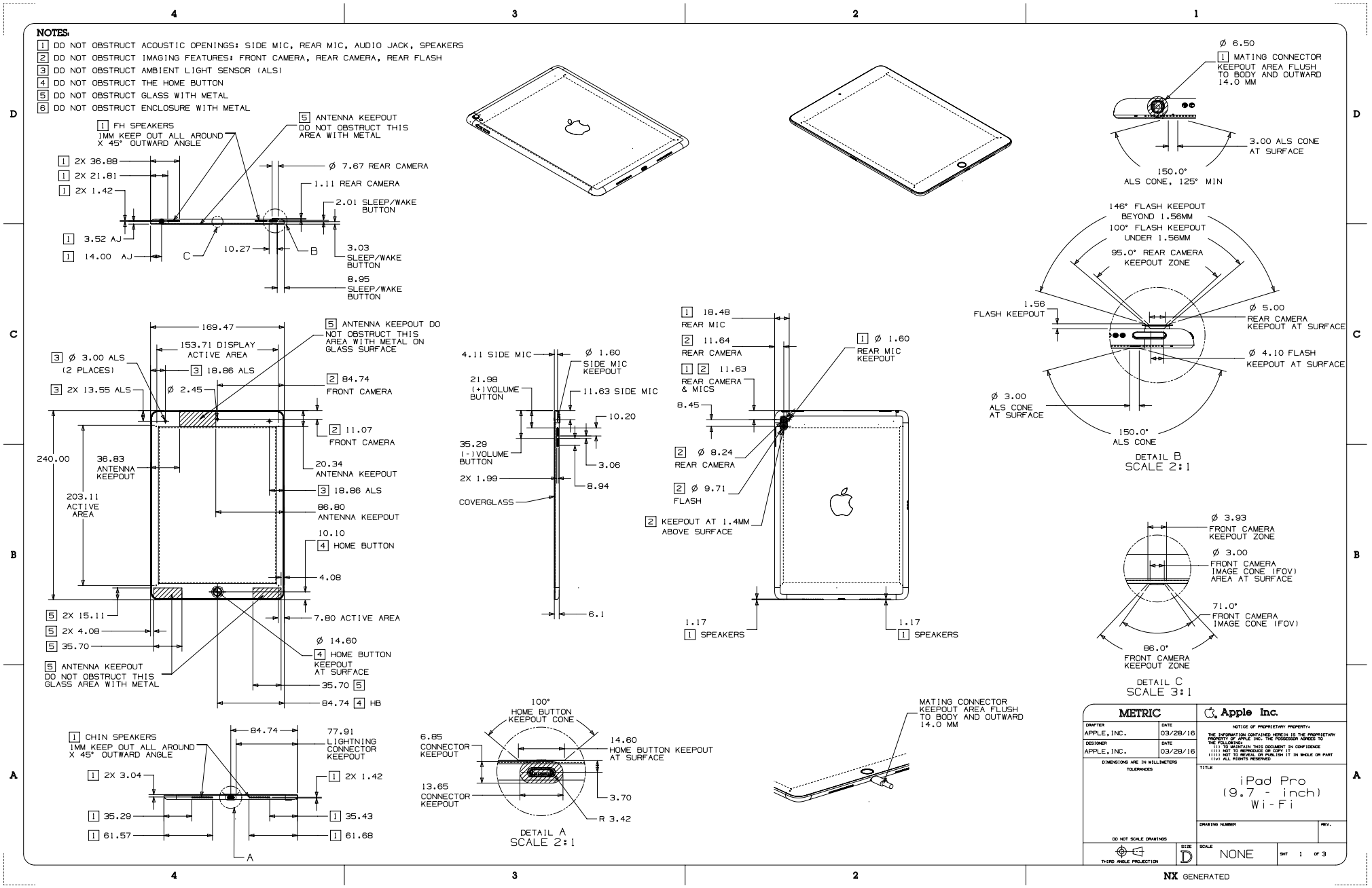

58.161 iPad Pro 9.7-inch with Wi-Fi + Cellular

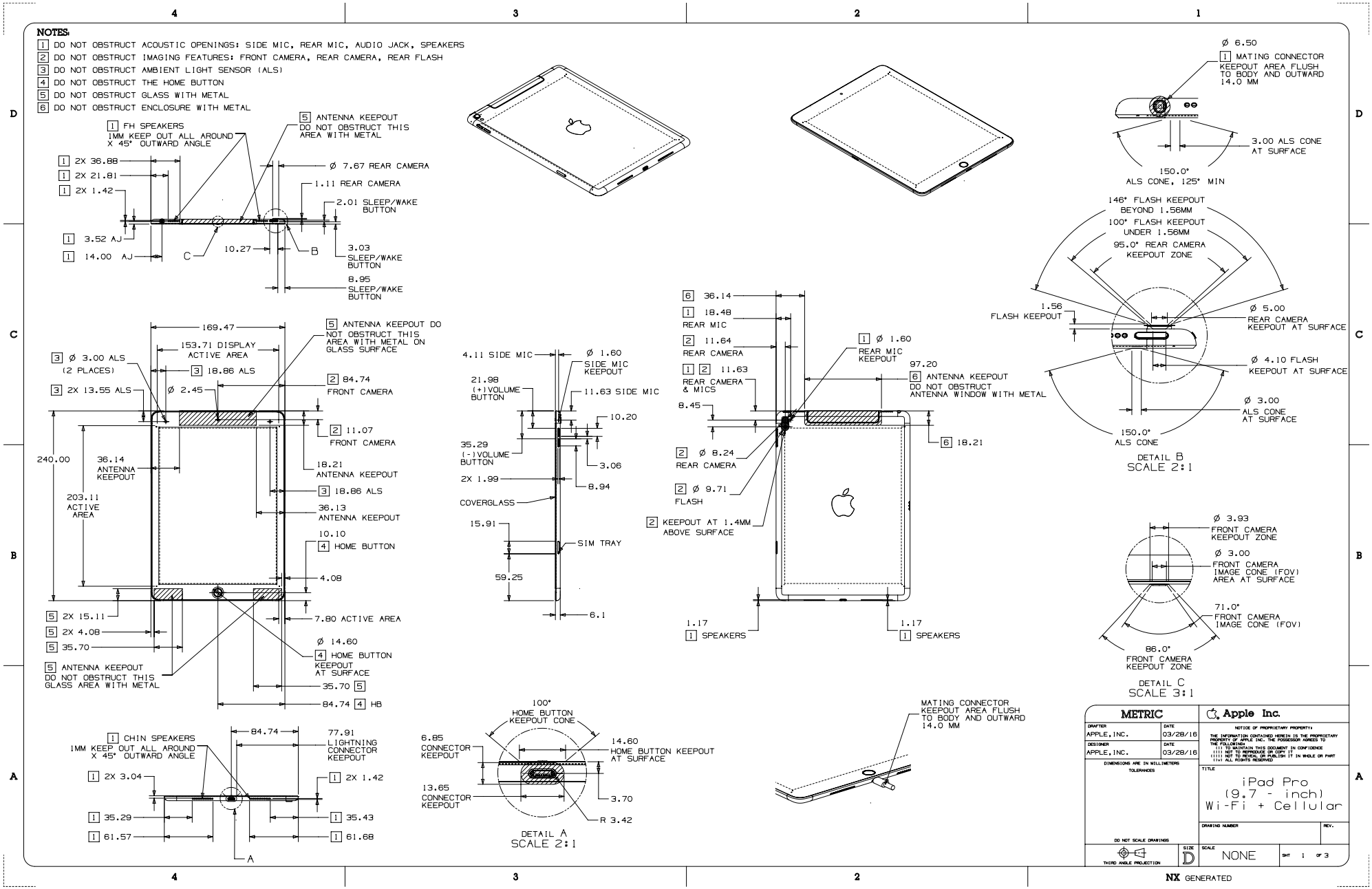

Copyright © 2024 Apple Inc. All Rights Reserved.

58.162 iPad Pro 9.7-inch Magnet/Hall Effect Sensors 1 of 2

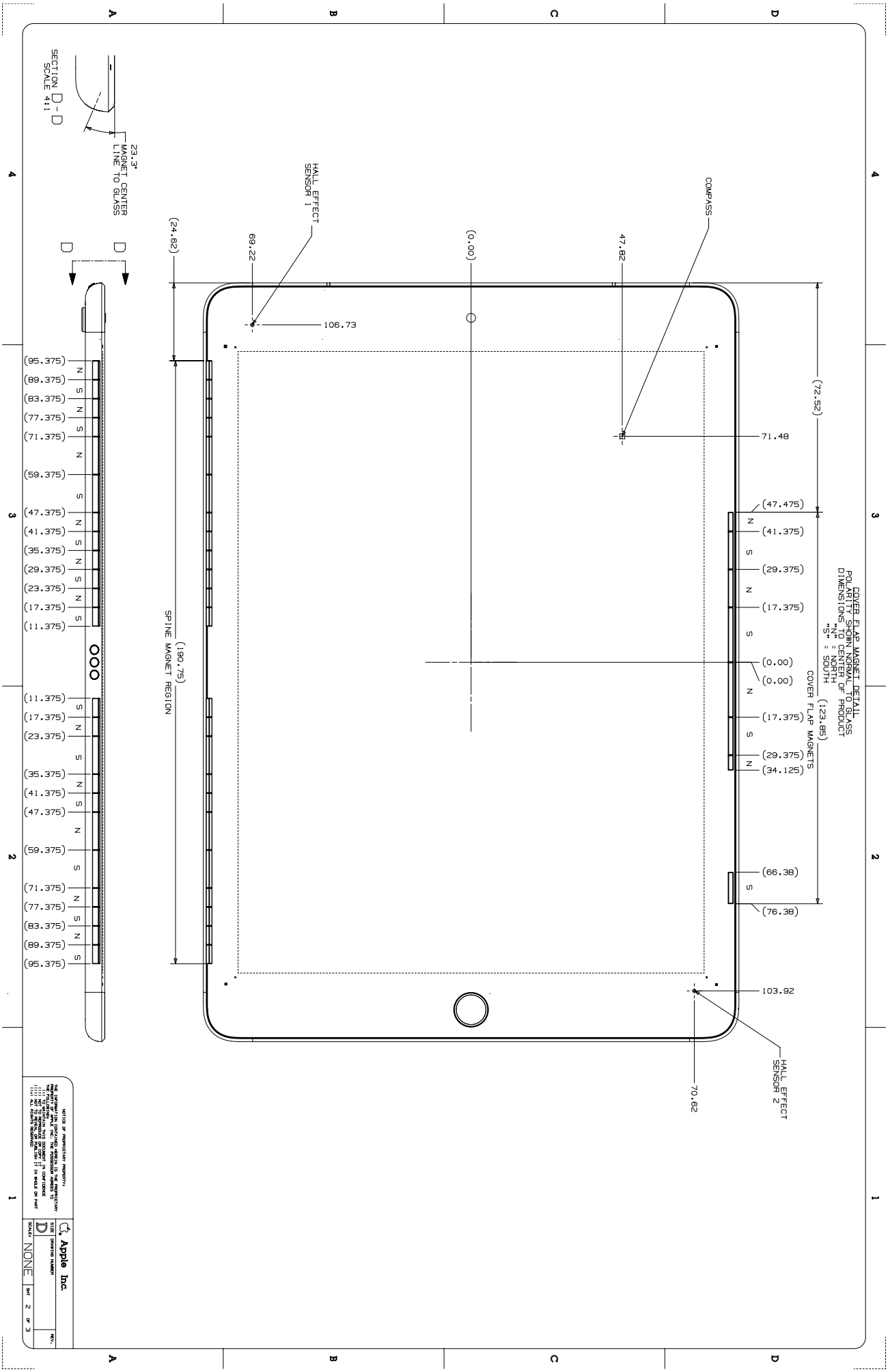

2024-05-13 | Copyright © 2024 Apple Inc. All Rights Reserved.

58.163 iPad Pro 9.7-inch Magnet/Hall Effect Sensors 2 of 2

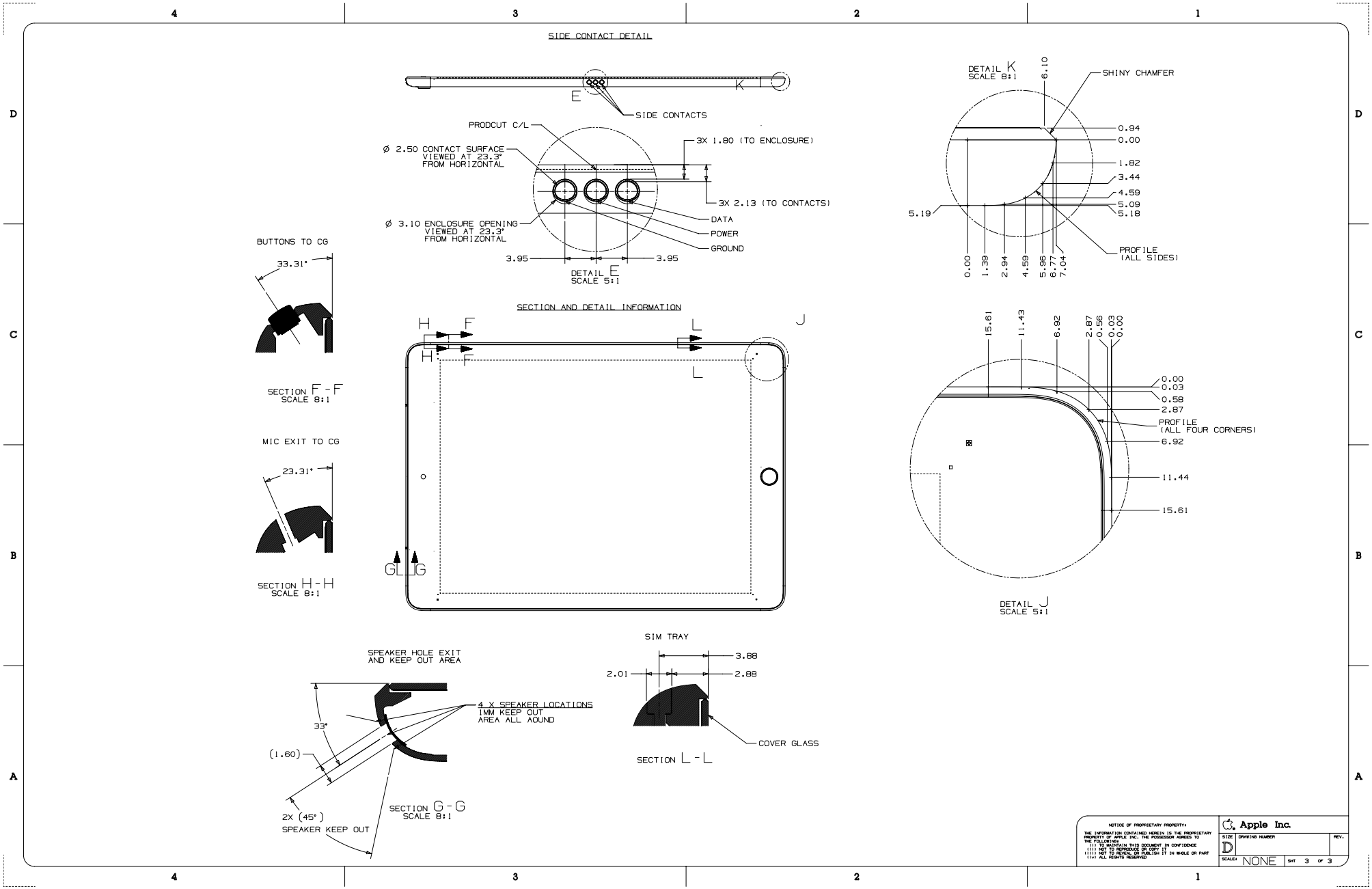

Copyright © 2024 Apple Inc. All Rights Reserved.

58.164 iPad Pro 12.9-inch (1st generation) with Wi-Fi

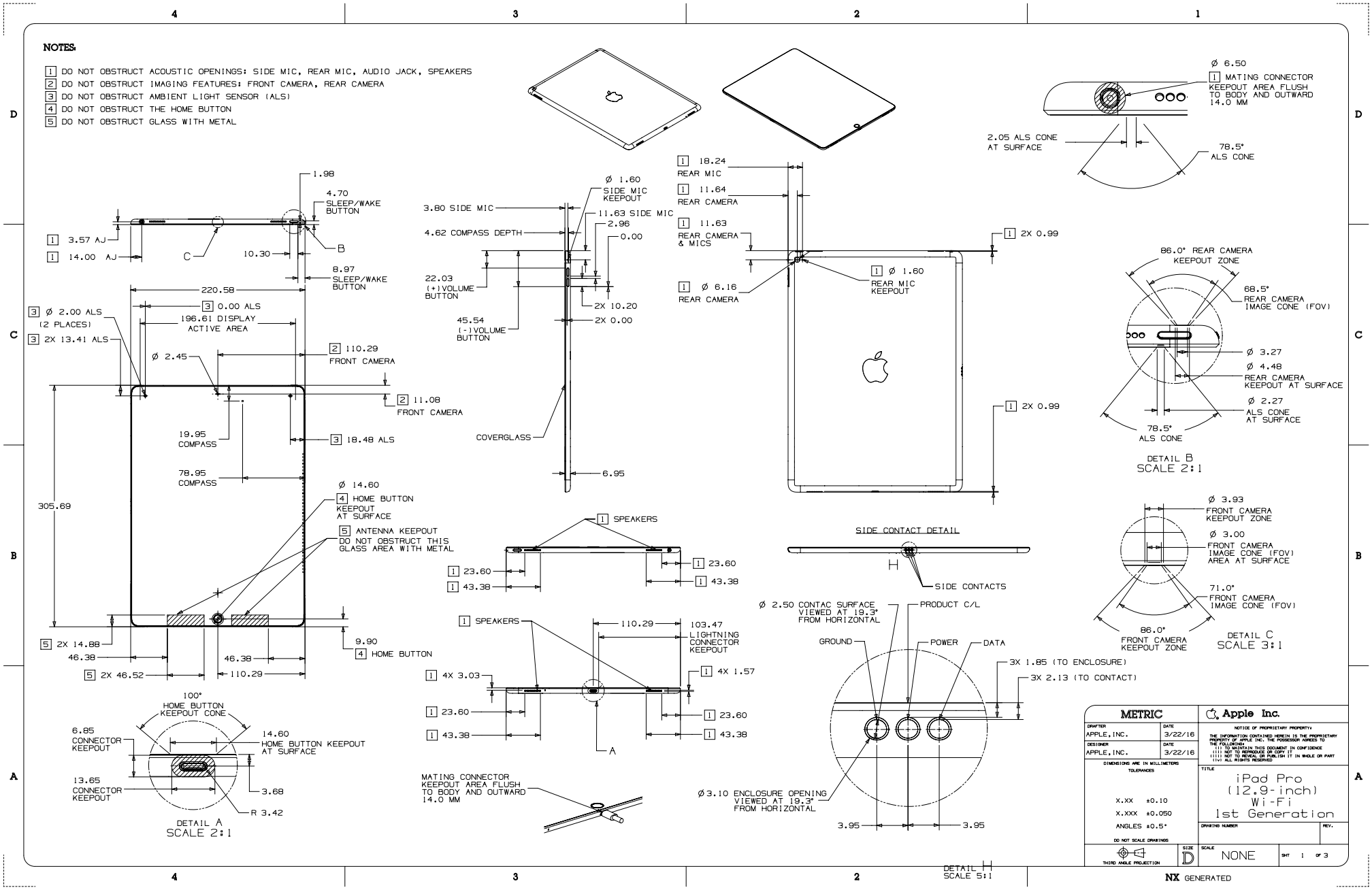

Copyright © 2024 Apple Inc. All Rights Reserved.

58.165 iPad Pro 12.9-inch (1st generation) with Wi-Fi + Cellular

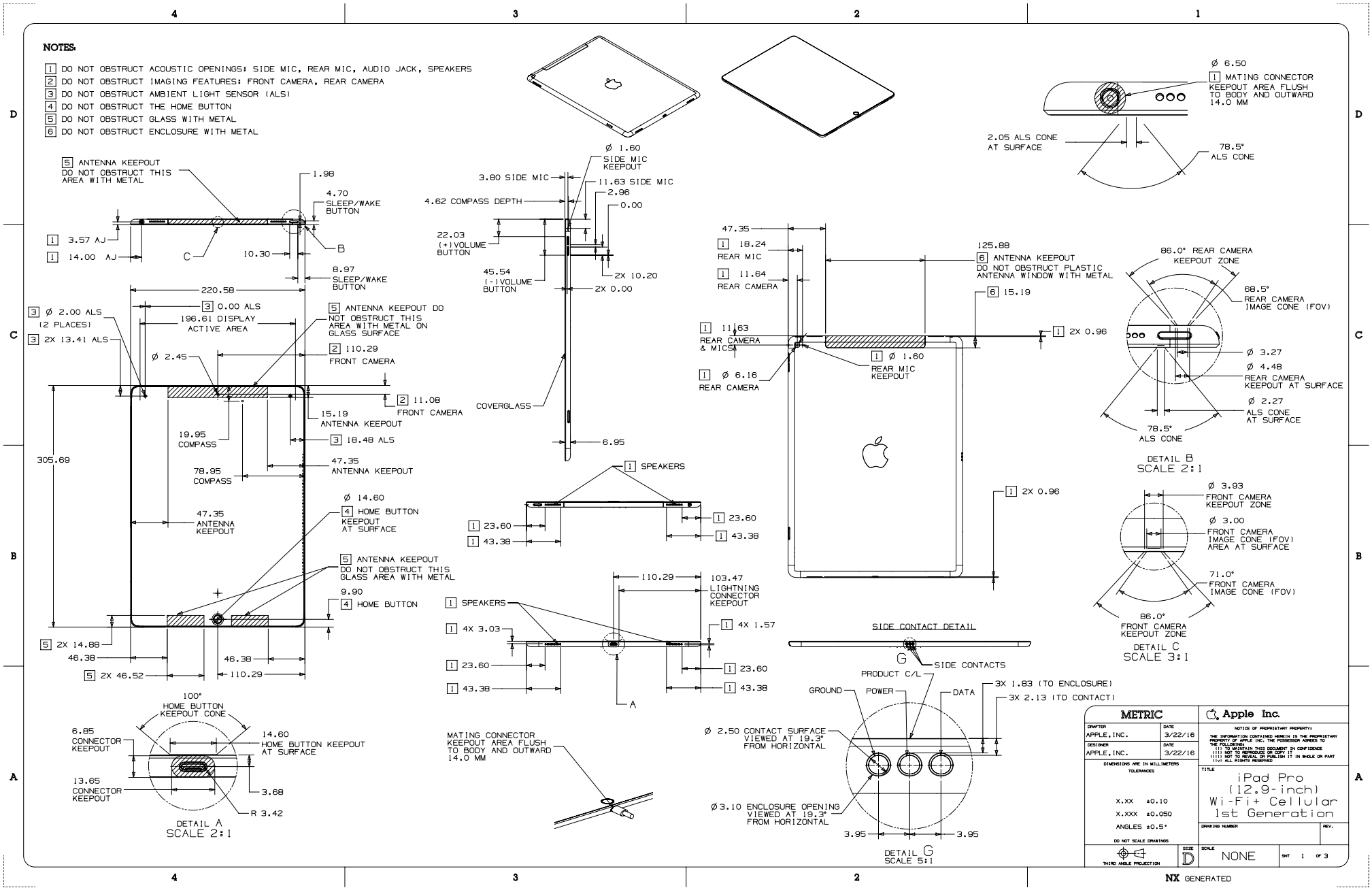

58.166 iPad Pro 12.9-inch (1st generation) Magnet/Hall Effect Sensors 1 of 2

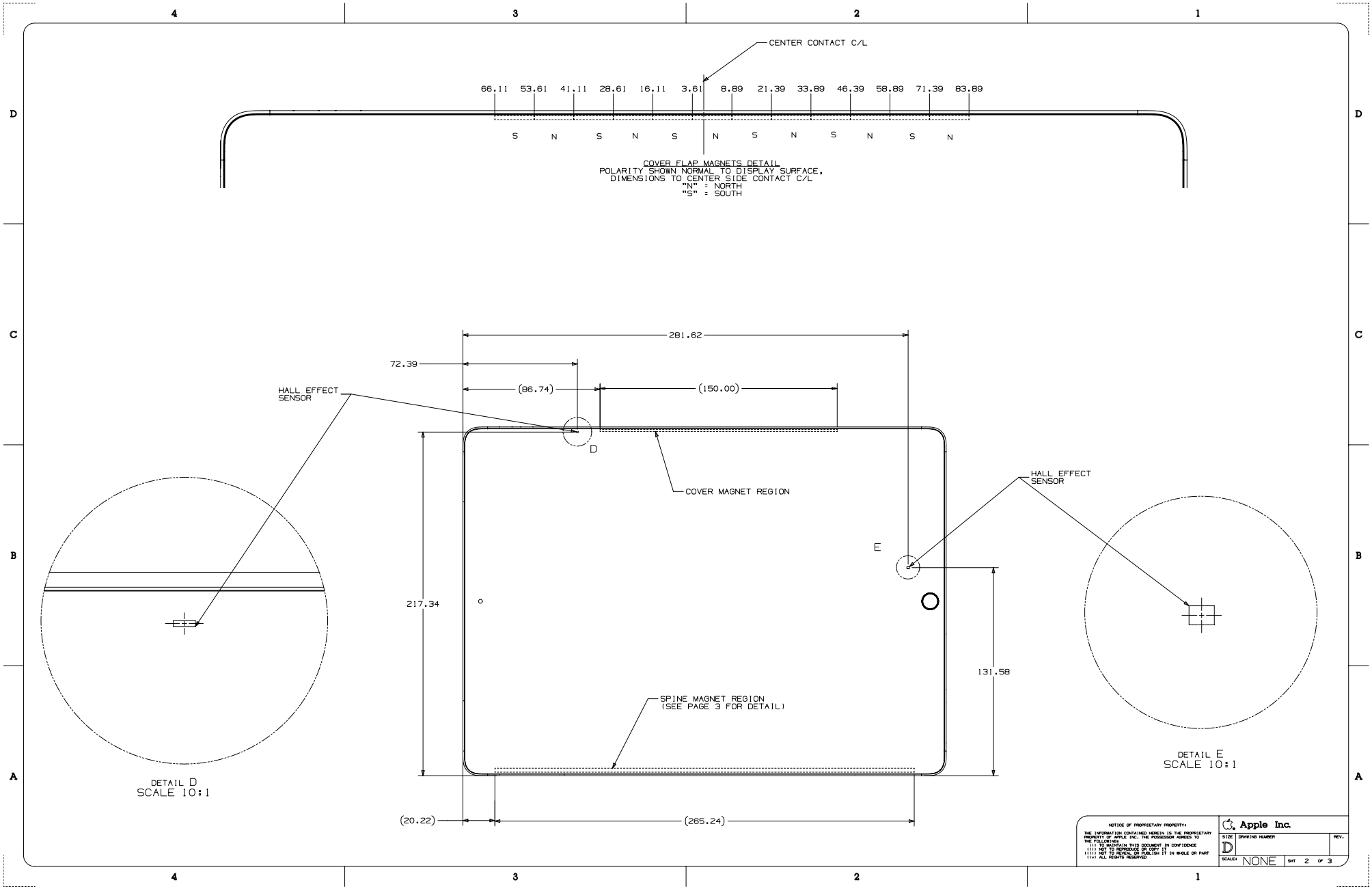

Copyright © 2024 Apple Inc. All Rights Reserved.

58.167 iPad Pro 12.9-inch (1st generation) Magnet/Hall Effect Sensors 2 of 2

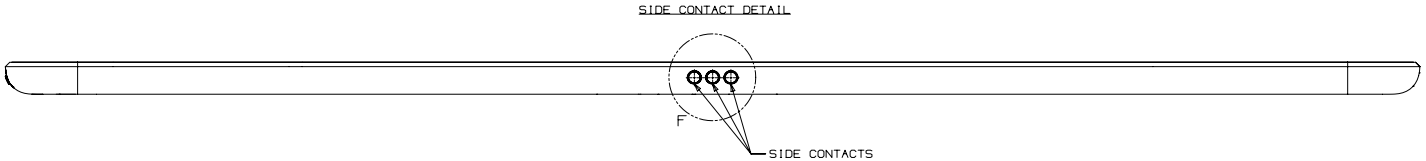

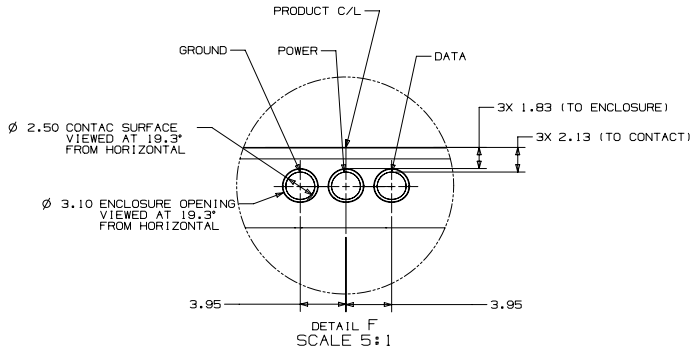

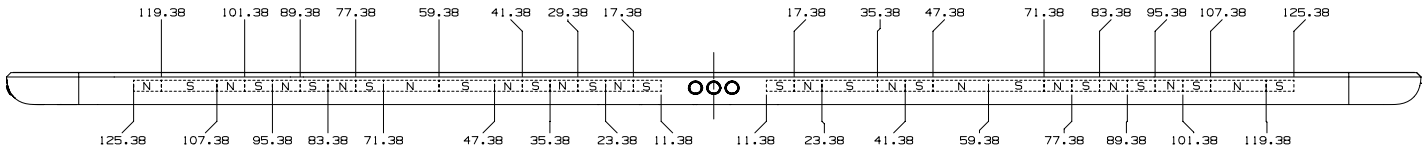

SPINE MAGNETS DETAIL
POLARITY SHOWN NORMAL TO HOUSING SURFACE AT CONTACT C/L (19.3° FROM HORIZONTAL)
DIMENSIONS TO CENTER SIDE CONTACT C/L
"N" = NORTH
"S" = SOUTH

NOTICE OF PROPRIETARY PROPERTY:
THE INFORMATION CONTAINED HEREIN IS THE PROPRIETARY PROPERTY OF APPLE INC. THE POSSESSOR AGREES TO THE FOLLOWING:
(i) TO MAINTAIN THIS DOCUMENT IN CONFIDENCE
(ii) NOT TO REPRODUCE OR COPY IT
(iii) NOT TO REPRODUCE OR PUBLISH IT IN WHOLE OR PART
(iv) ALL RIGHTS RESERVED

Apple Inc.
SIZE D | DRAWING NUMBER | REV.
SCALE: NONE | SHT 3 OF 3

58.168 iPad mini 4 with Wi-Fi

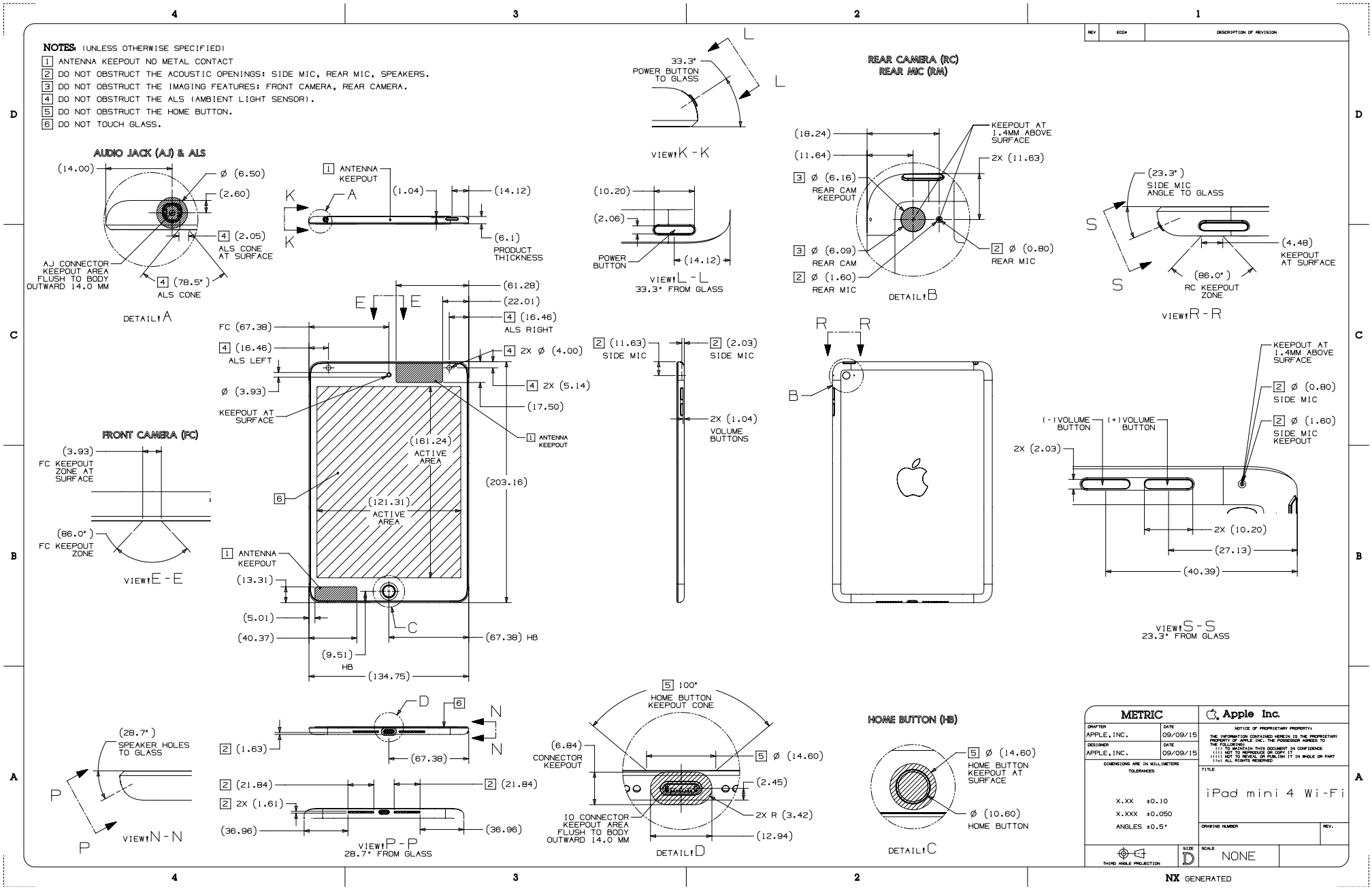

Copyright © 2024 Apple Inc. All Rights Reserved.

58.169 iPad mini 4 with Wi-Fi + Cellular

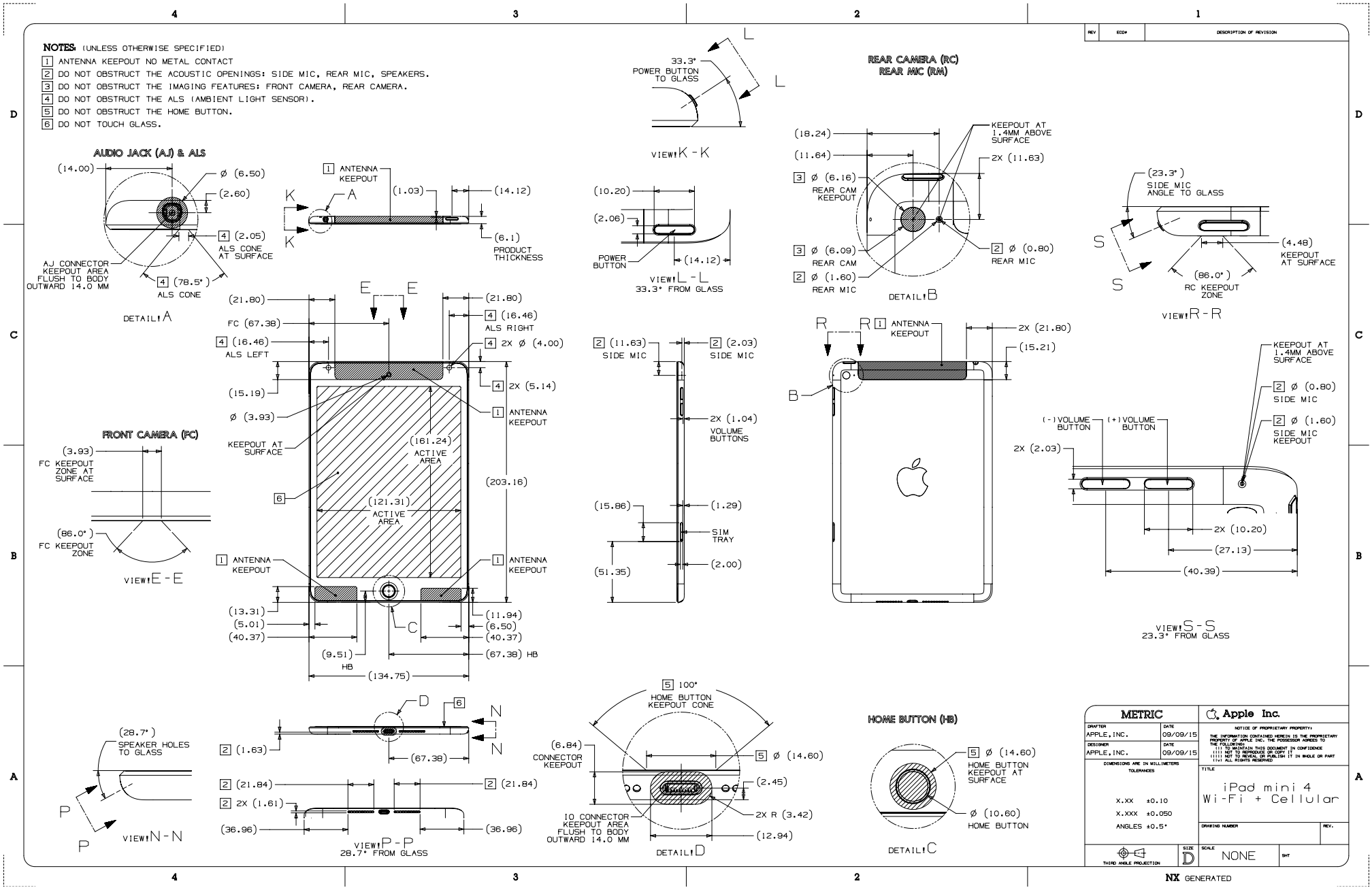

Copyright © 2024 Apple Inc. All Rights Reserved.

58.170 iPad mini 4 Magnet/Hall Effect Sensors

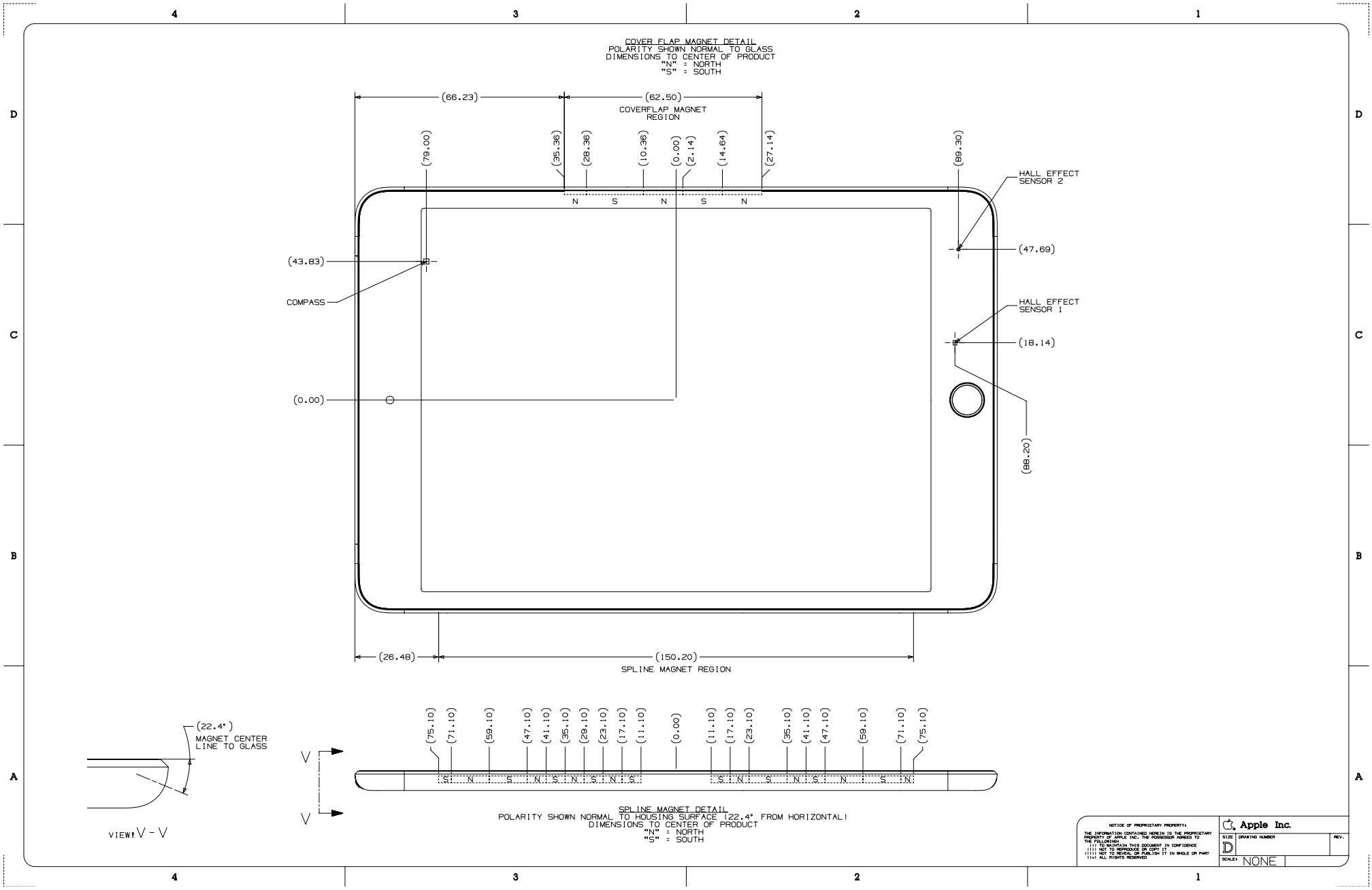

Copyright © 2024 Apple Inc. All Rights Reserved.

58.171 iPad Air 2 with Wi-Fi

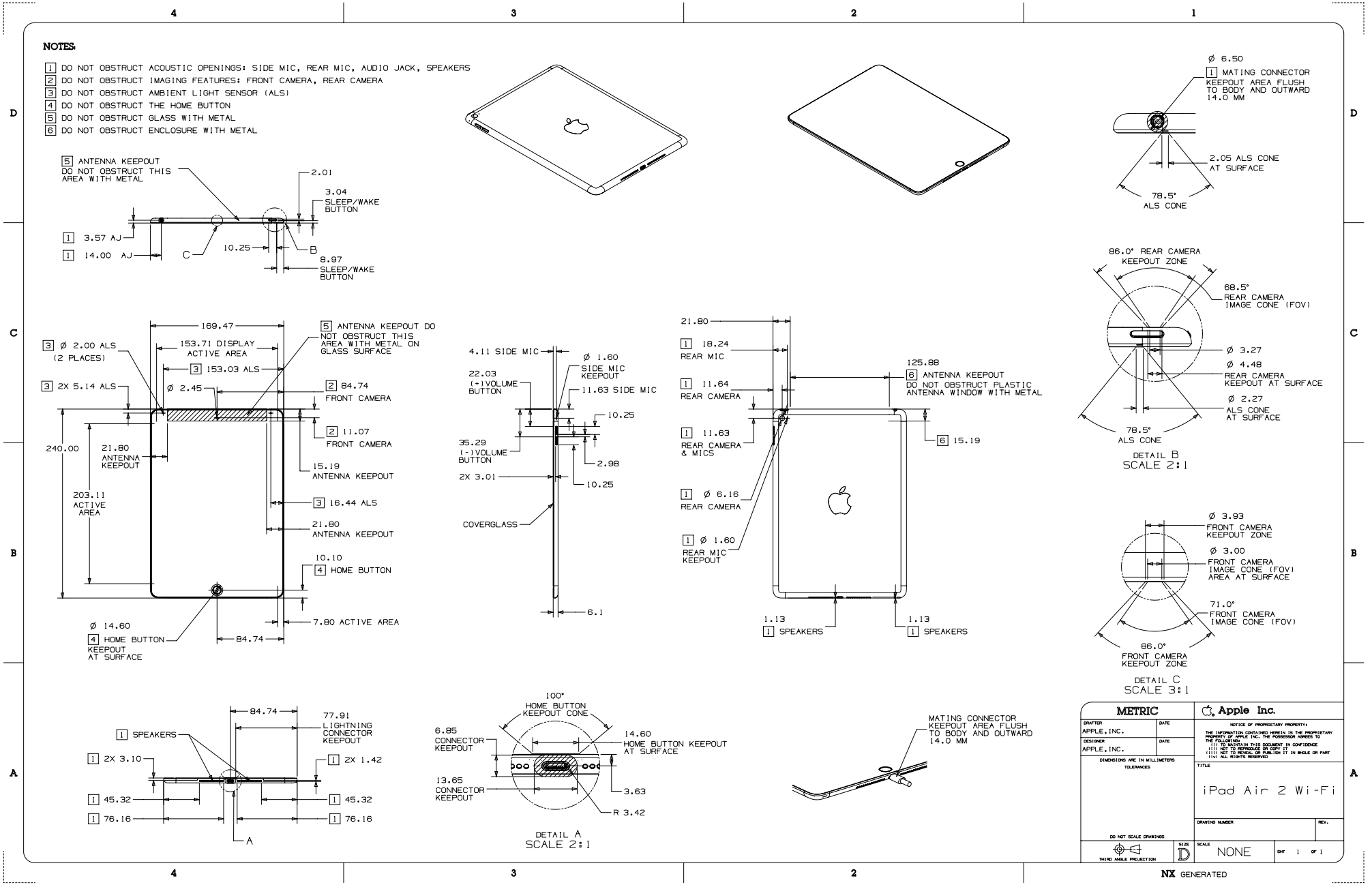

58.172 iPad Air 2 with Wi-Fi + Cellular

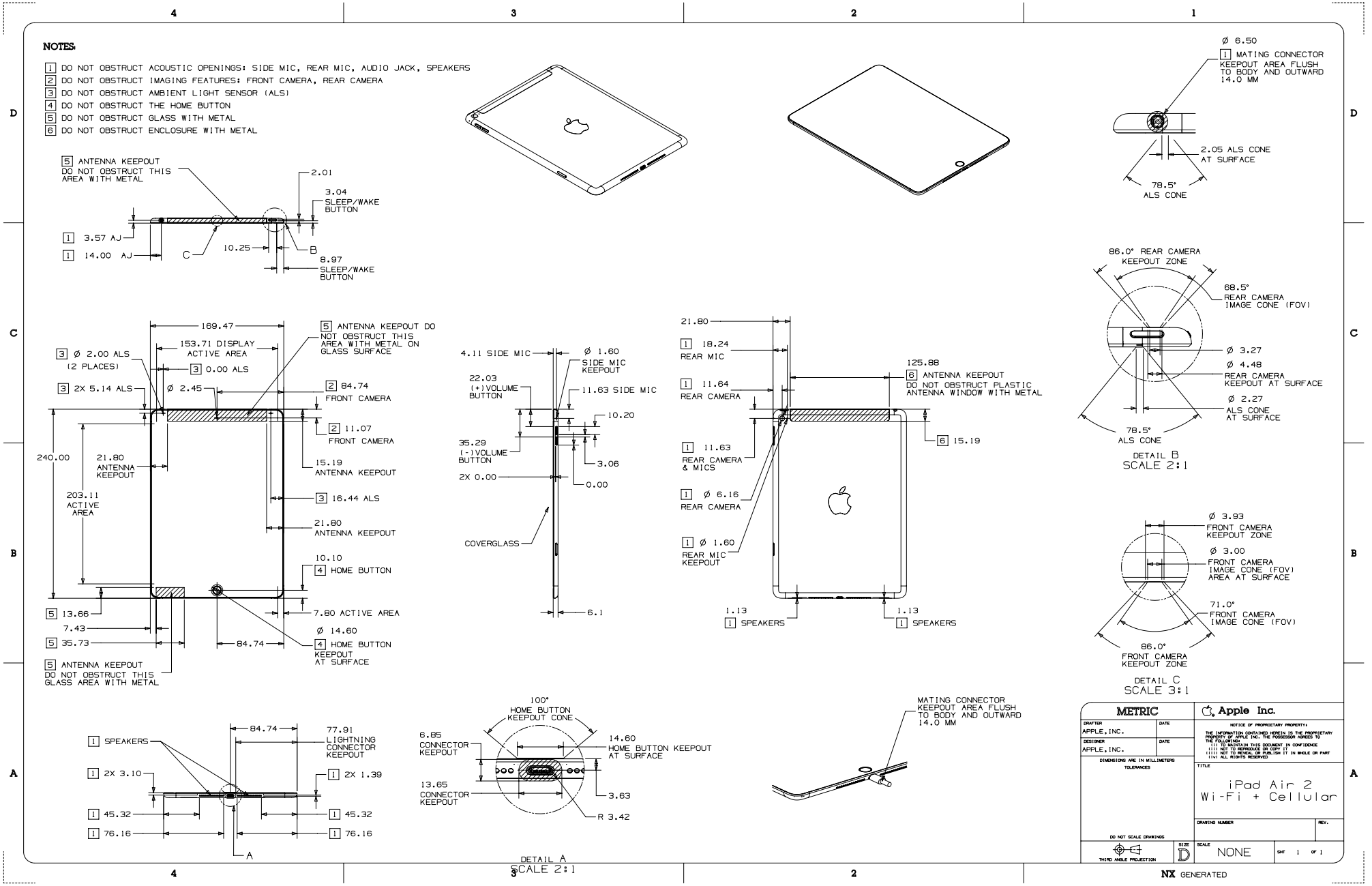

58.173 iPad mini 2 and iPad mini 3 with Wi-Fi

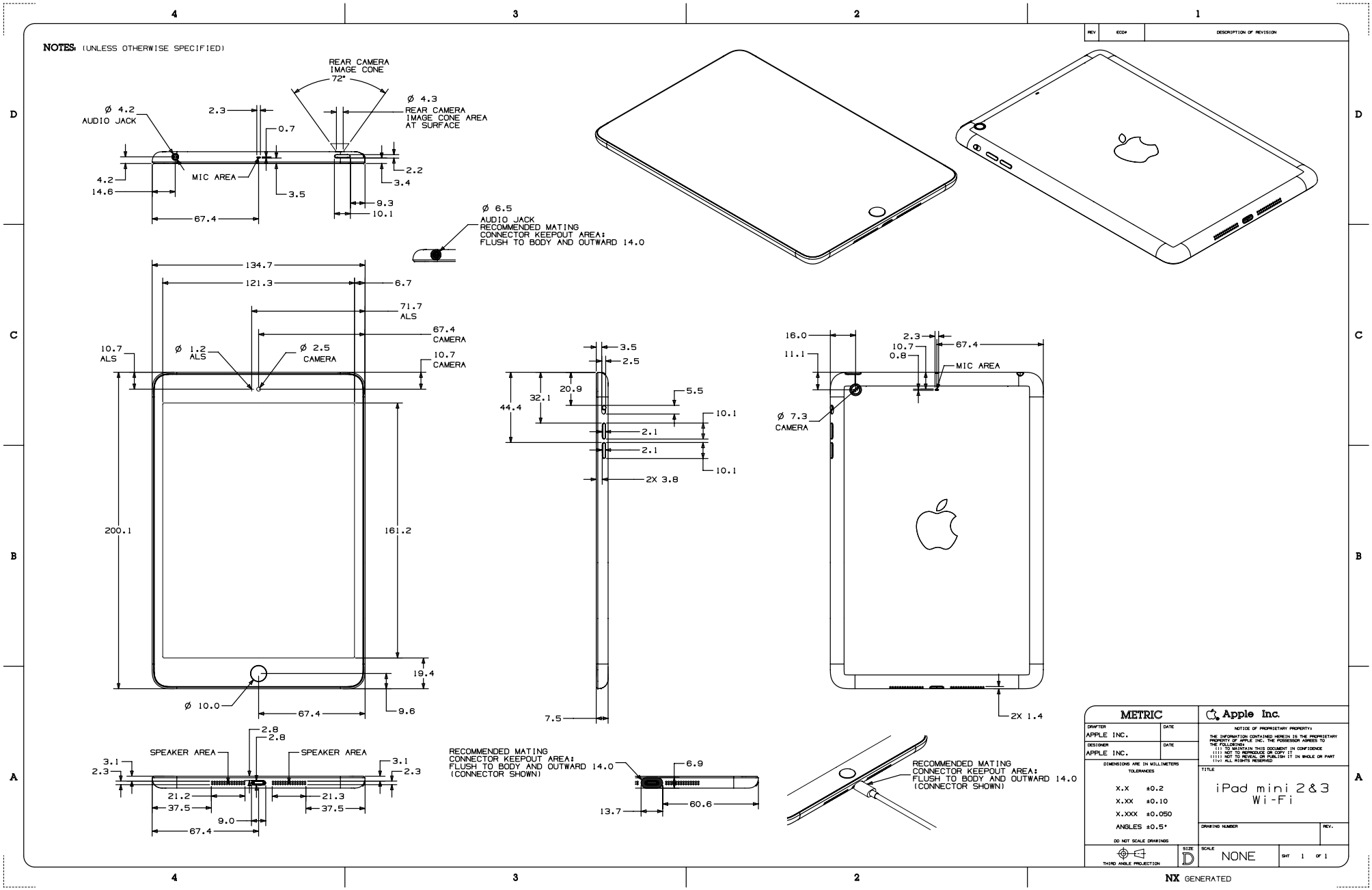

58.174 iPad mini 2 and iPad mini 3 with Wi-Fi + Cellular

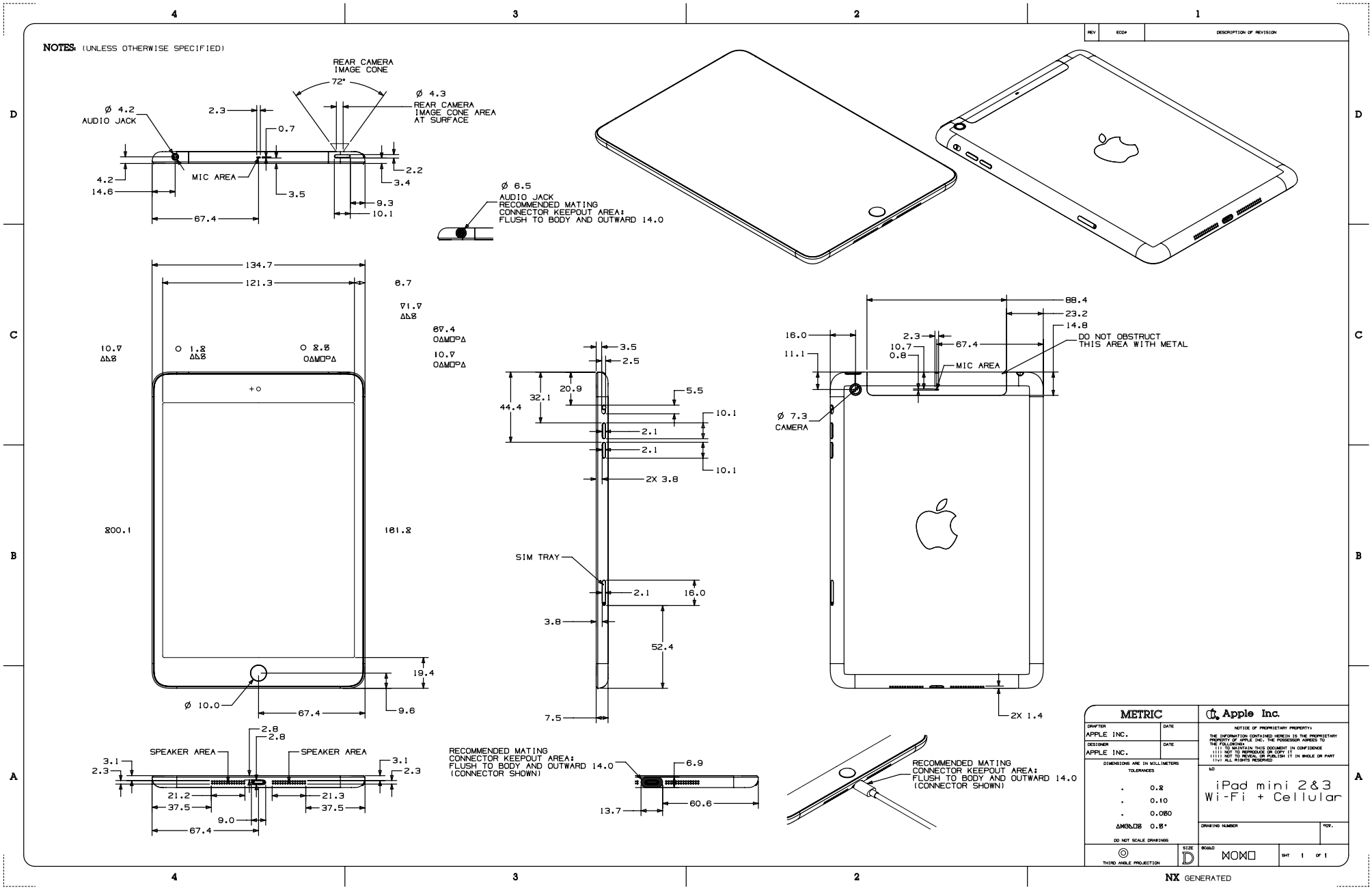

Copyright © 2024 Apple Inc. All Rights Reserved.

58.175 iPad Air with Wi-Fi

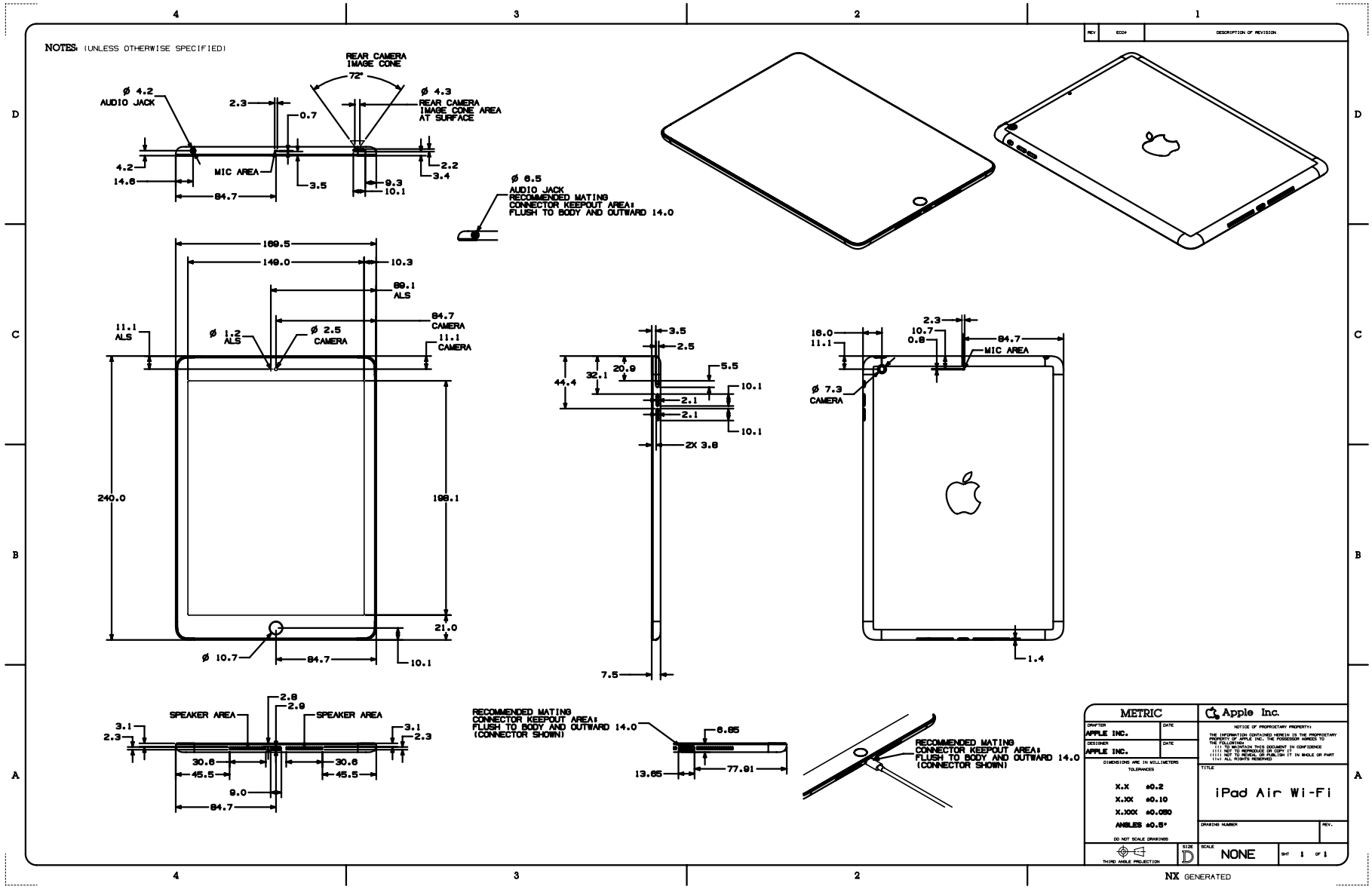

Copyright © 2024 Apple Inc. All Rights Reserved.

58.176 iPad Air with Wi-Fi + Cellular

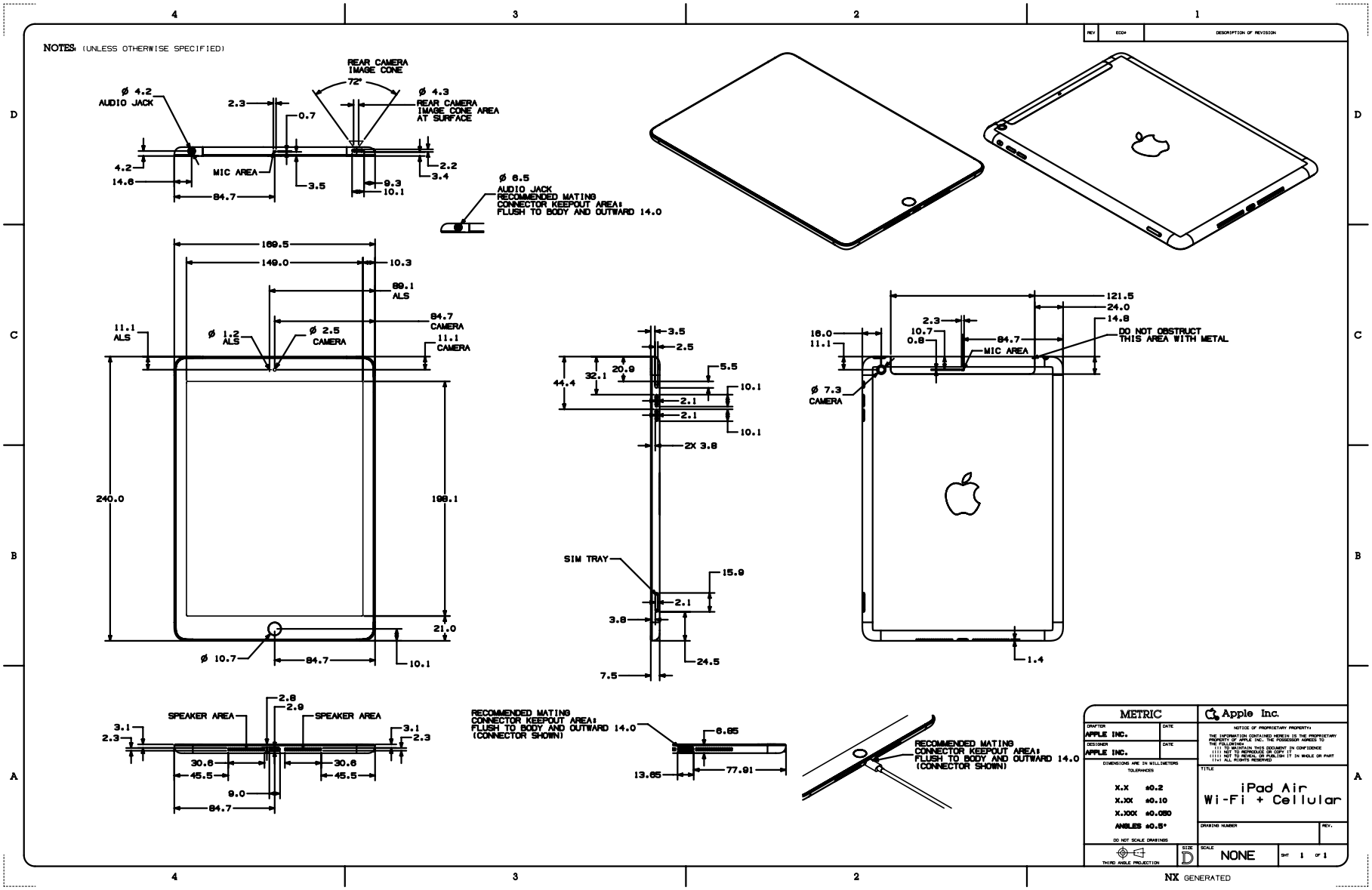

Copyright © 2024 Apple Inc. All Rights Reserved.

58.177 iPad mini with Wi-Fi

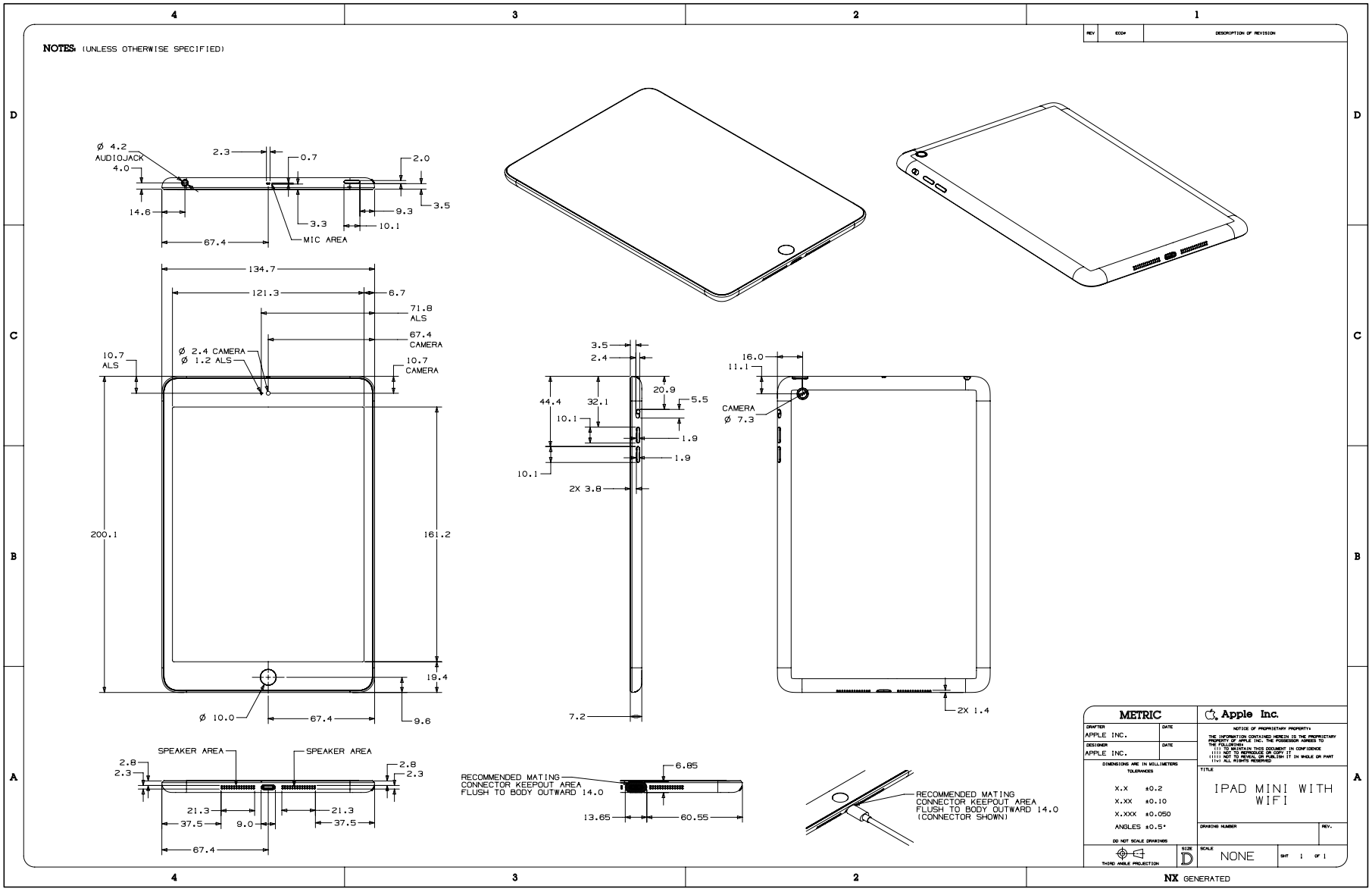

Copyright © 2024 Apple Inc. All Rights Reserved.

58.178 iPad mini with Wi-Fi + Cellular

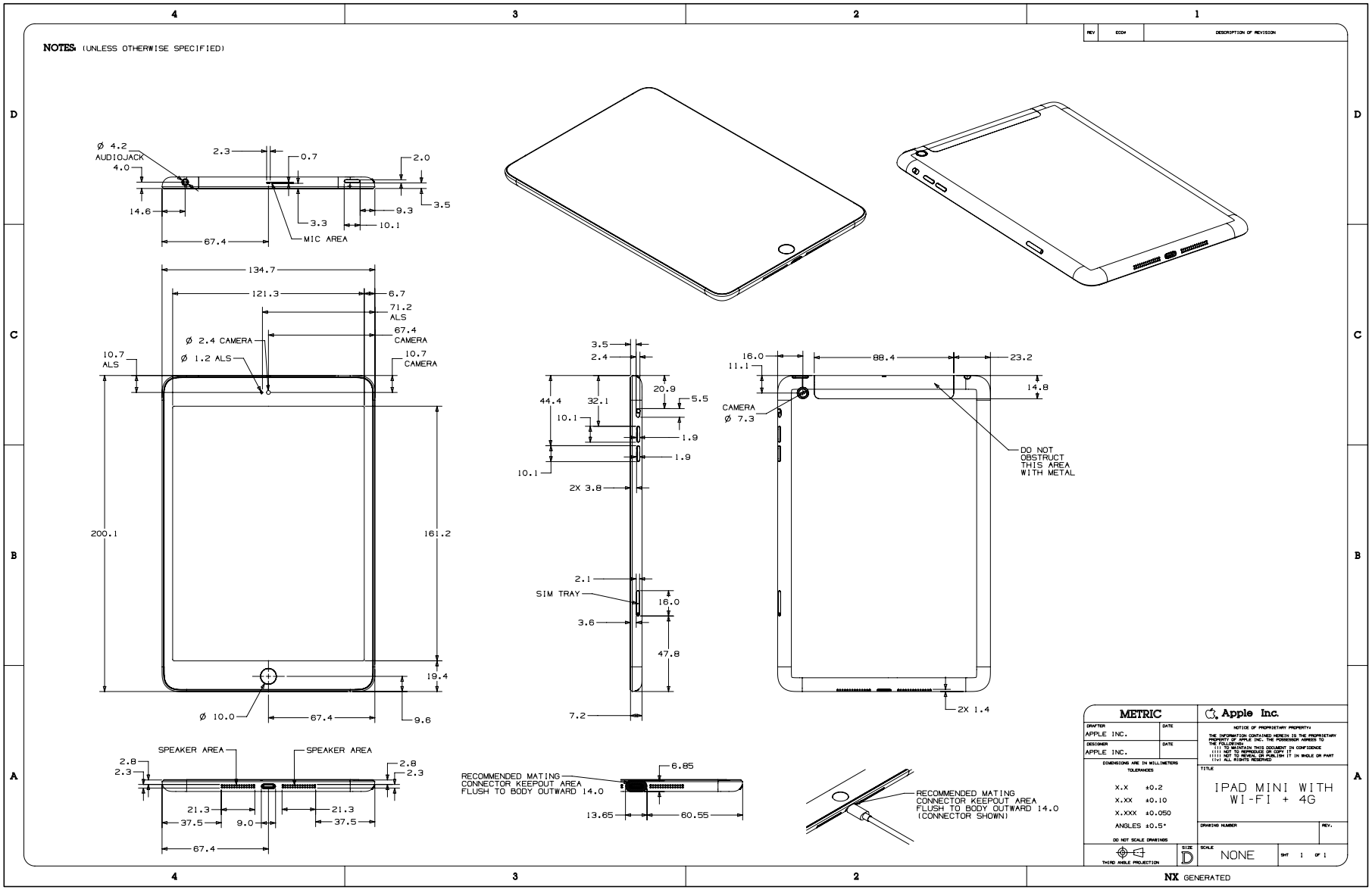

58.179 iPad (4th generation) with Wi-Fi

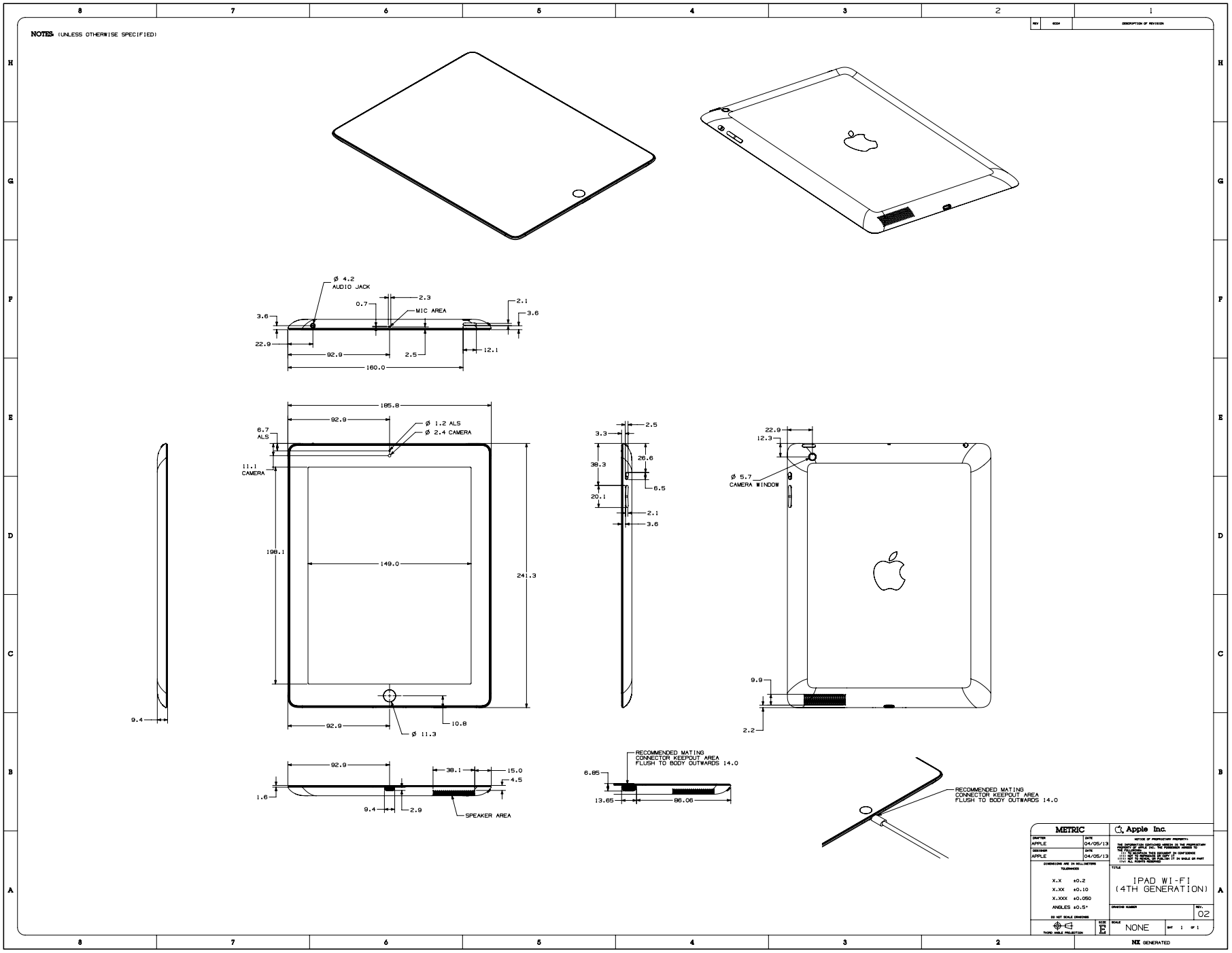

Copyright © 2024 Apple Inc. All Rights Reserved.

58.180 iPad (4th generation) with Wi-Fi + Cellular

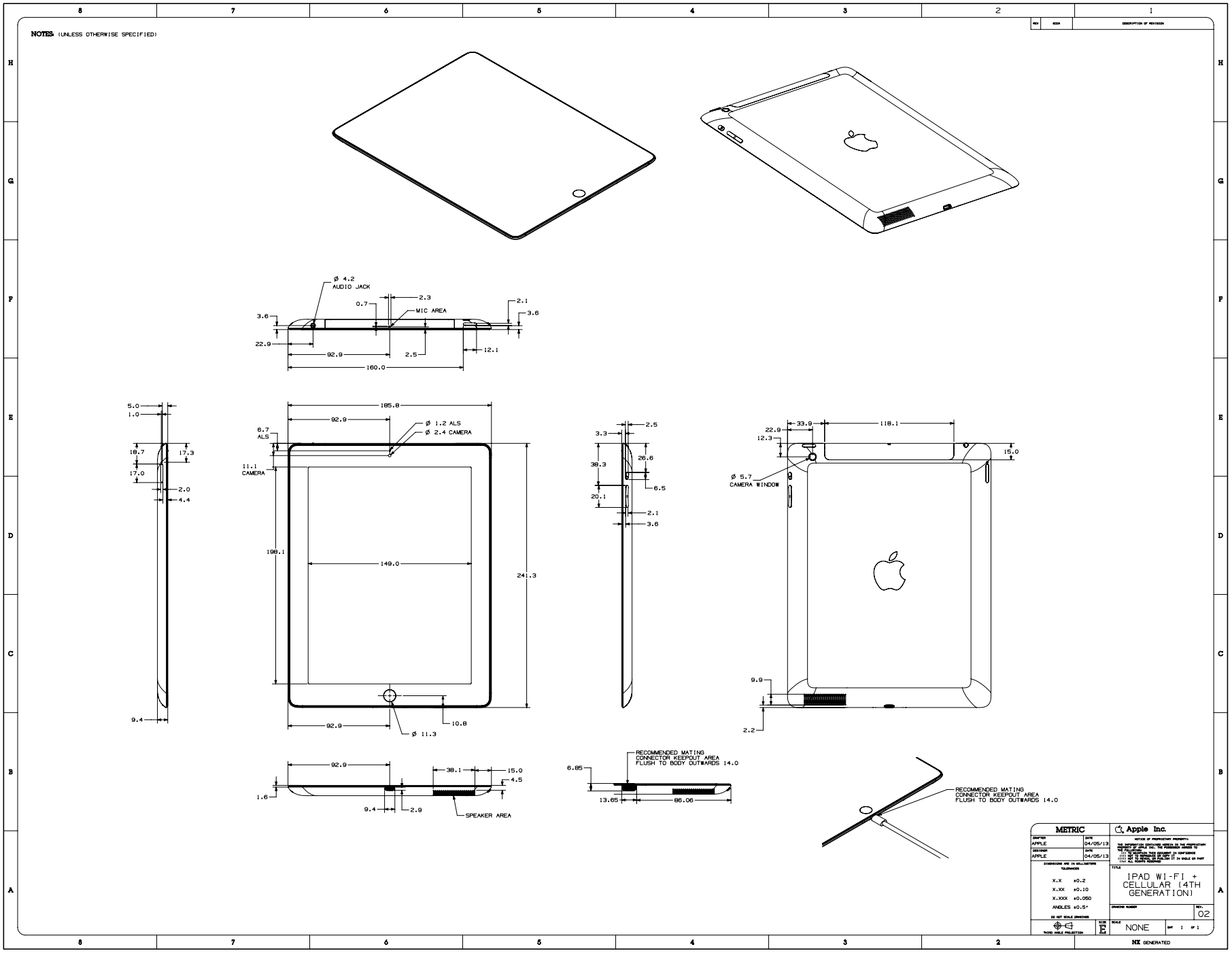

Copyright © 2024 Apple Inc. All Rights Reserved.

58.181 Apple Watch Ultra 2, 1 of 3

NOTES:

1. CASE DOES NOT INTERFERE WITH CLICK OR ROTATION FUNCTION OF DIGITAL CROWN
   CASE DOES NOT APPLY FORCE ON DIGITAL CROWN
   CASE DOES NOT OBSTRUCT FACE OF CROWN
2. CASE DOES NOT OBSTRUCT THE WATCH ACOUSTIC OPENINGS AND ALTIMETER AND MUST NOT DEGRADE ACOUSTIC OR WATER EJECTION PERFORMANCE
3. CASE DOES NOT OBSTRUCT THE WATCH CHARGING INTERFACE
4. CASE DOES NOT OBSTRUCT THE WATCH OPTICAL SENSORS
5. CASE DOES NOT EXTEND INTO WATCH SENSOR WINDOWS
6. CASE DOES NOT CONTACT THE WATCH COVER GLASS
7. CASE DOES NOT CONTACT ELECTRICAL SENSORS
8. CASE DOES NOT INTERFERE WITH CLICK FUNCTION OF BUTTON
9. NO METAL CASES ALLOWED DUE TO ANTENNA FUNCTION
10. CASE DOES NOT CONTAIN FERROMAGNETIC MATERIAL

OVERALL DIMENSIONS AND CALLOUTS

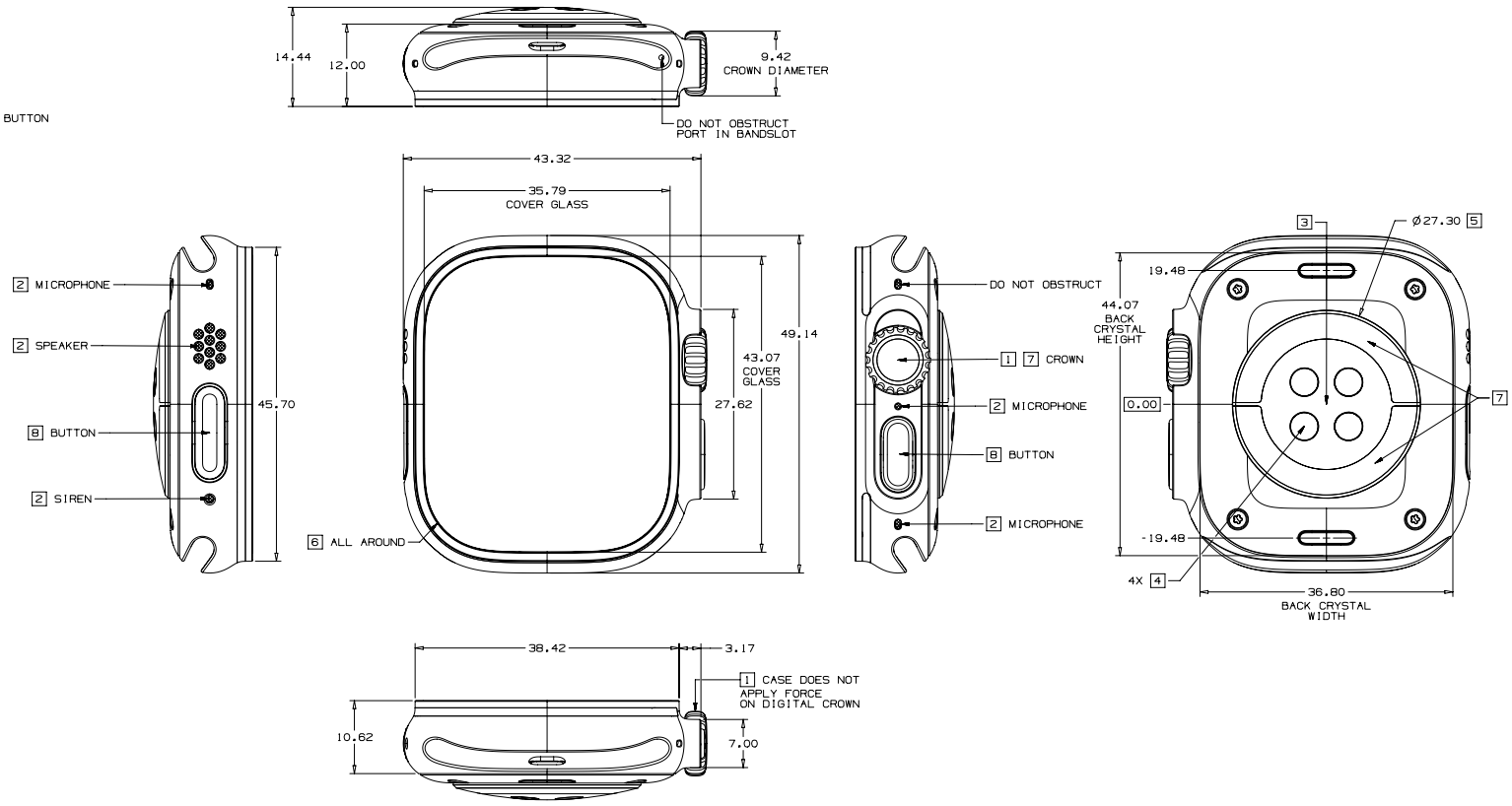

NOTICE OF PROPRIETARY PROPERTY:
THE INFORMATION CONTAINED HEREIN IS THE PROPRIETARY PROPERTY OF APPLE INC. THE POSSESSOR AGREES TO THE FOLLOWING:
(i) TO MAINTAIN THIS DOCUMENT IN CONFIDENCE
(ii) NOT TO REPRODUCE OR COPY IT
(iii) NOT TO REVEAL OR PUBLISH IT IN WHOLE OR PART
(iv) ALL RIGHTS RESERVED

Apple Inc.

SIZE	DRAWING NUMBER	REV.
D	APPLE WATCH ULTRA 2	01
SCALE: NONE	SHT 1 OF 3	

Copyright © 2024 Apple Inc. All Rights Reserved.

58.182 Apple Watch Ultra 2, 2 of 3

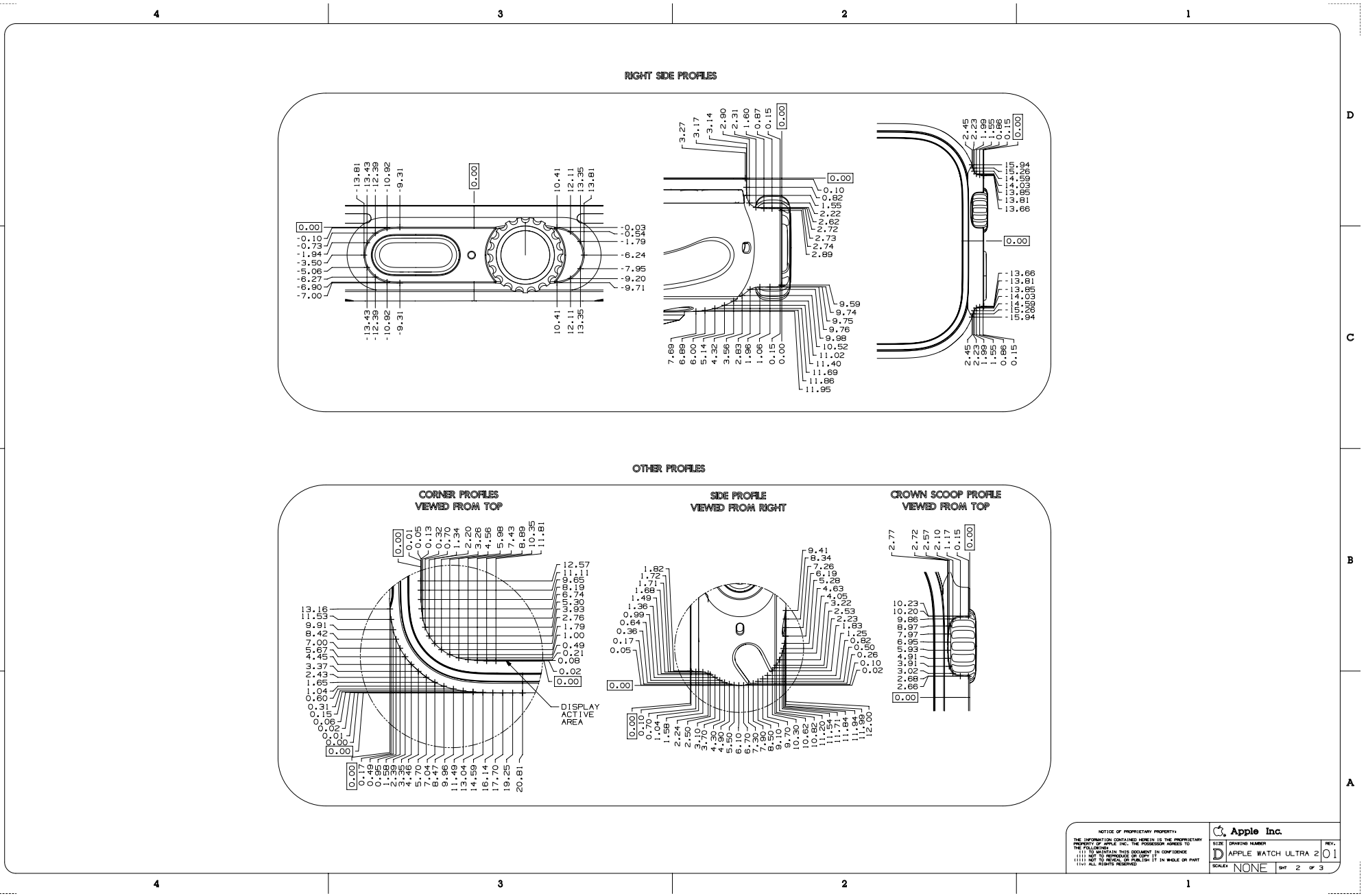

Copyright © 2024 Apple Inc. All Rights Reserved.

58.183 Apple Watch Ultra 2, 3 of 3

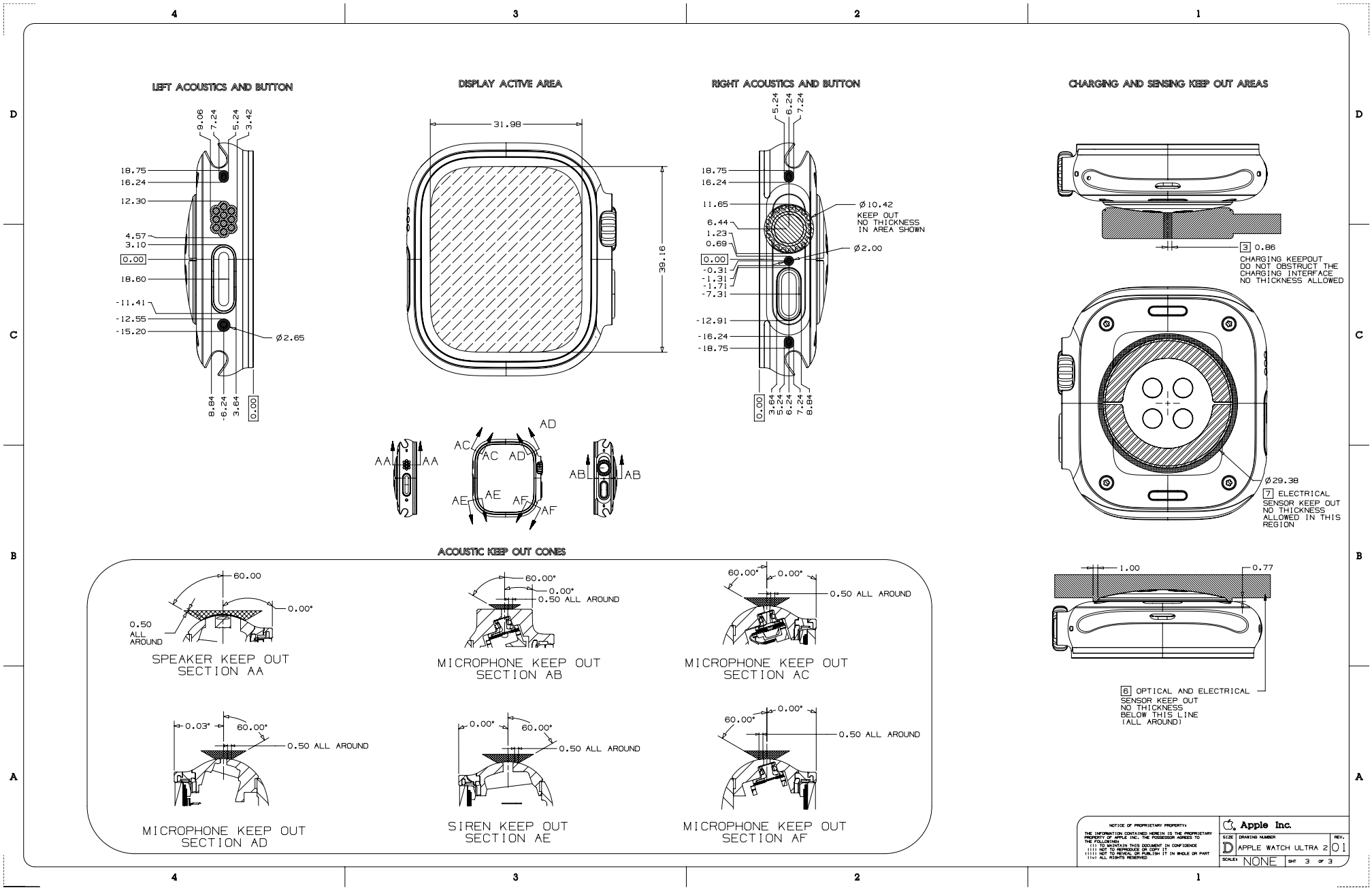

Copyright © 2024 Apple Inc. All Rights Reserved.

58.184 Apple Watch Series 9, 45 mm

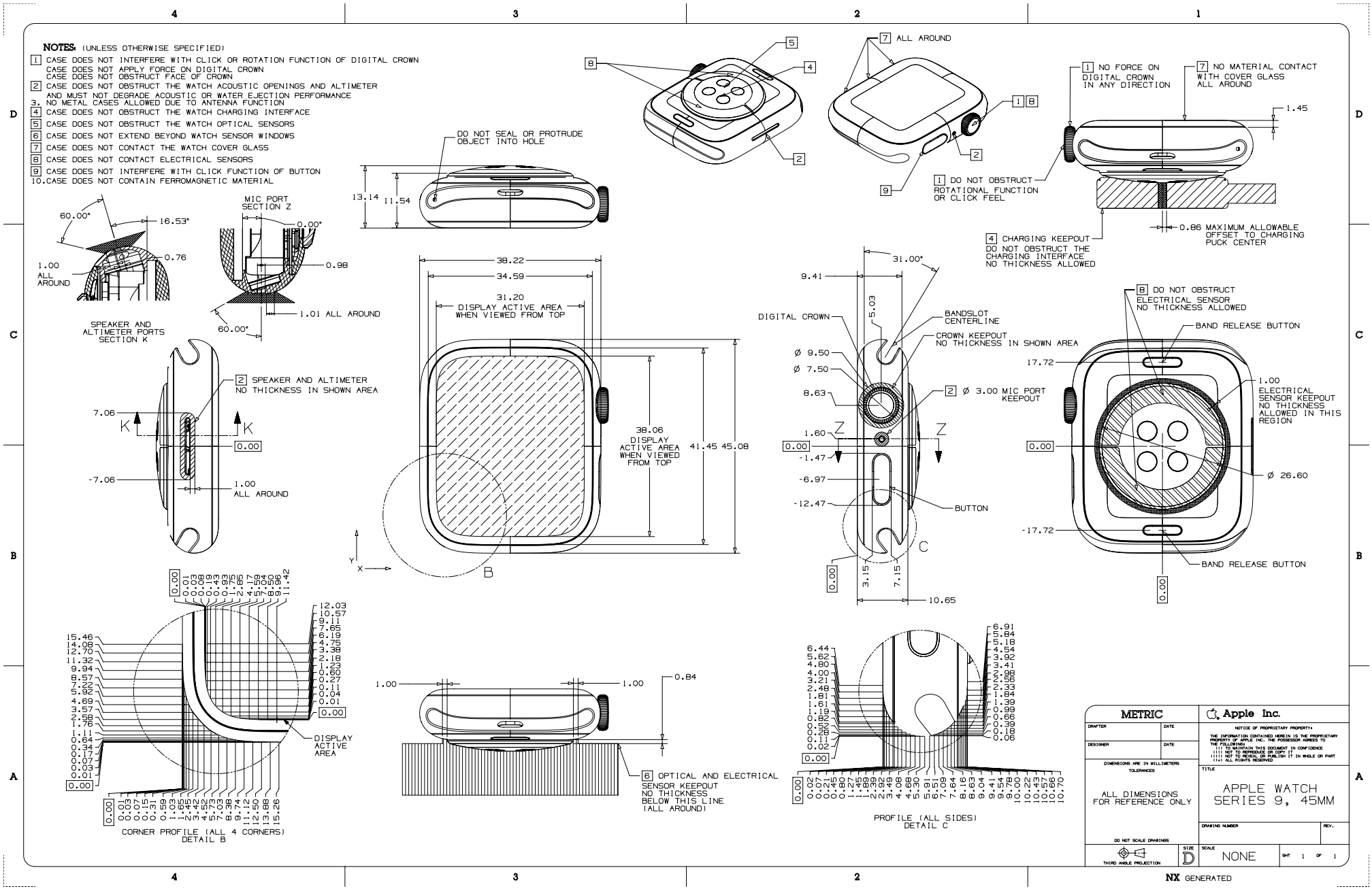

58.185 Apple Watch Series 9, 41 mm

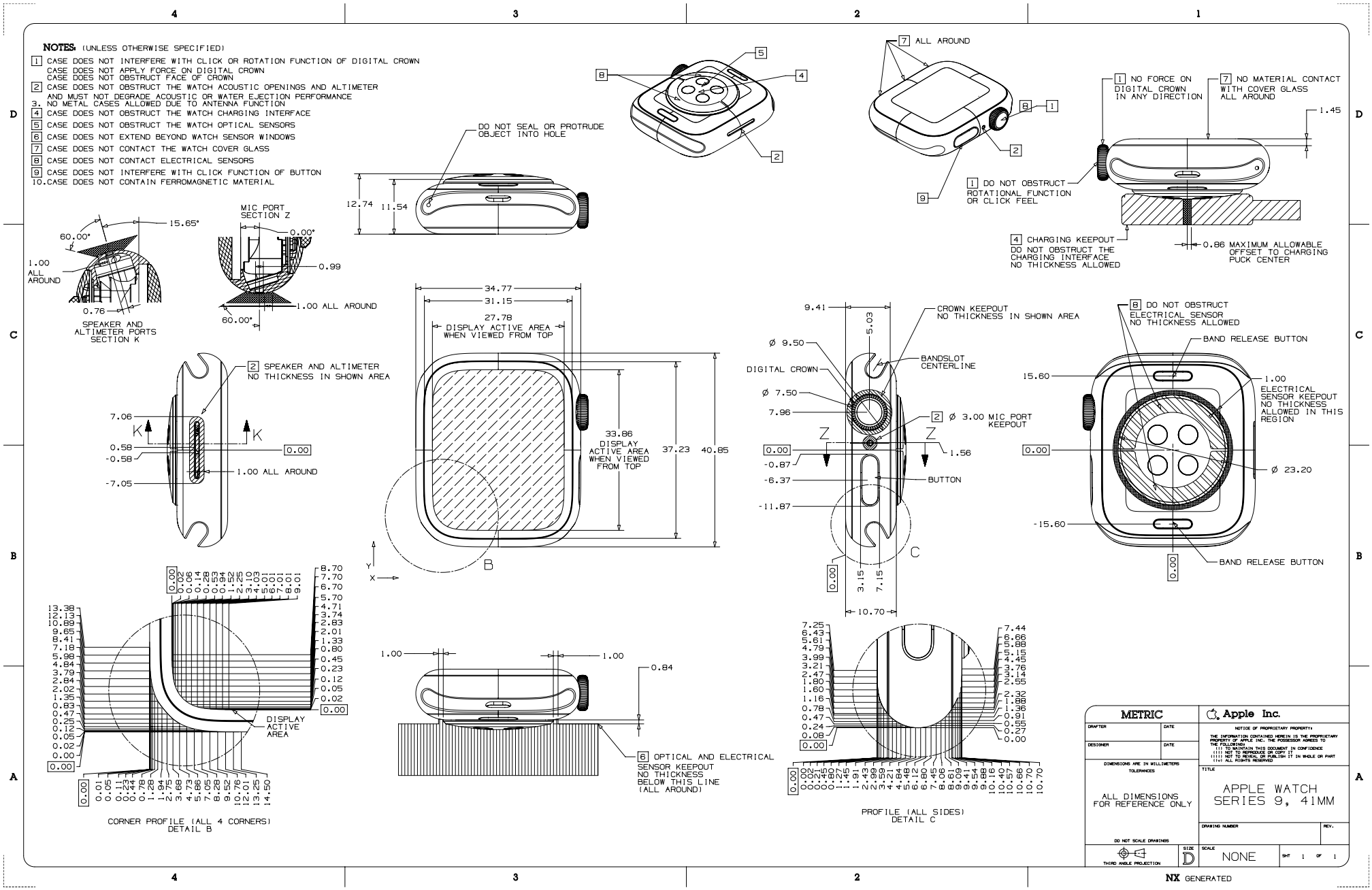

58.186 Apple Watch Ultra, 1 of 3

NOTES:

1. CASE DOES NOT INTERFERE WITH CLICK OR ROTATION FUNCTION OF DIGITAL CROWN
   CASE DOES NOT APPLY FORCE ON DIGITAL CROWN
   CASE DOES NOT OBSTRUCT FACE OF CROWN
2. CASE DOES NOT OBSTRUCT THE WATCH ACOUSTIC OPENINGS AND ALTIMETER AND MUST NOT DEGRADE ACOUSTIC OR WATER EJECTION PERFORMANCE
3. CASE DOES NOT OBSTRUCT THE WATCH CHARGING INTERFACE
4. CASE DOES NOT OBSTRUCT THE WATCH OPTICAL SENSORS
5. CASE DOES NOT EXTEND INTO WATCH SENSOR WINDOWS
6. CASE DOES NOT CONTACT THE WATCH COVER GLASS
7. CASE DOES NOT CONTACT ELECTRICAL SENSORS
8. CASE DOES NOT INTERFERE WITH CLICK FUNCTION OF BUTTON
9. NO METAL CASES ALLOWED DUE TO ANTENNA FUNCTION
10. CASE DOES NOT CONTAIN FERROMAGNETIC MATERIAL

OVERALL DIMENSIONS AND CALLOUTS

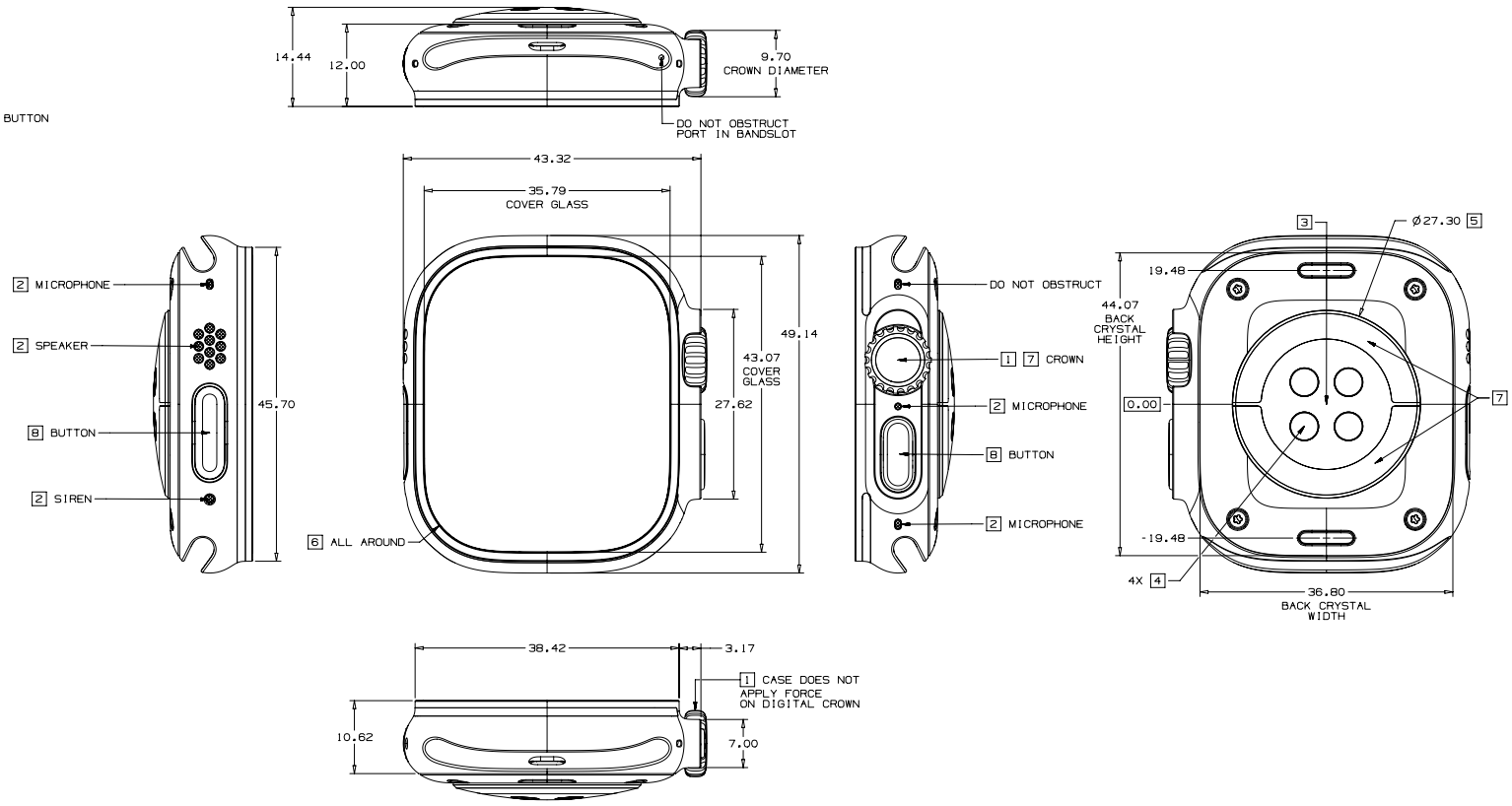

NOTICE OF PROPRIETARY PROPERTY:
THE INFORMATION CONTAINED HEREIN IS THE PROPRIETARY PROPERTY OF APPLE INC. THE POSSESSOR AGREES TO THE FOLLOWING:
(i) TO MAINTAIN THIS DOCUMENT IN CONFIDENCE
(ii) NOT TO REPRODUCE OR COPY IT
(iii) NOT TO REVEAL OR PUBLISH IT IN WHOLE OR PART
(iv) ALL RIGHTS RESERVED

Apple Inc.

SIZE	DRAWING NUMBER	REV.
D	APPLE WATCH ULTRA	01
SCALE: NONE	SHT 1 OF 3	

Copyright © 2024 Apple Inc. All Rights Reserved.

58.187 Apple Watch Ultra, 2 of 3

RIGHT SIDE PROFILES

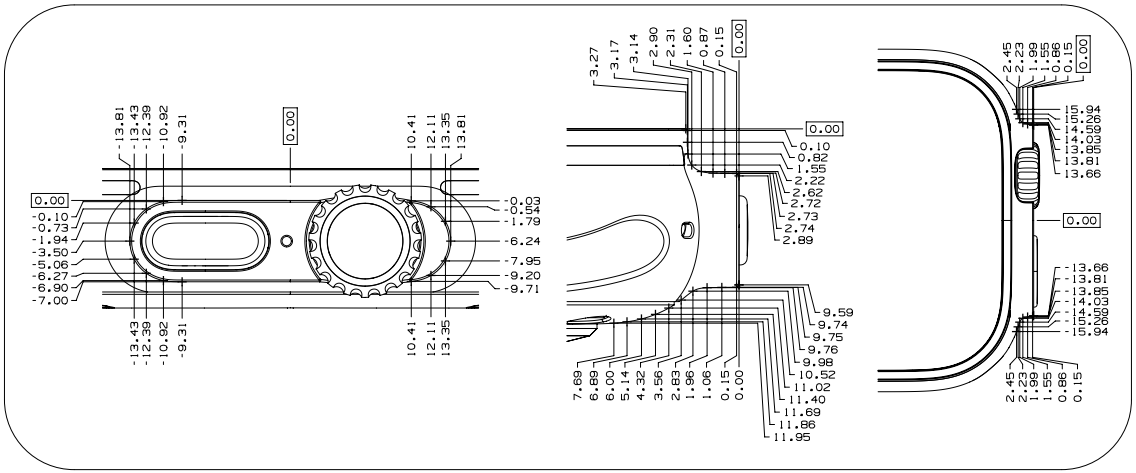

OTHER PROFILES

CORNER PROFILES
VIEWED FROM TOP

SIDE PROFILE
VIEWED FROM RIGHT

CROWN SCOOP PROFILE
VIEWED FROM TOP

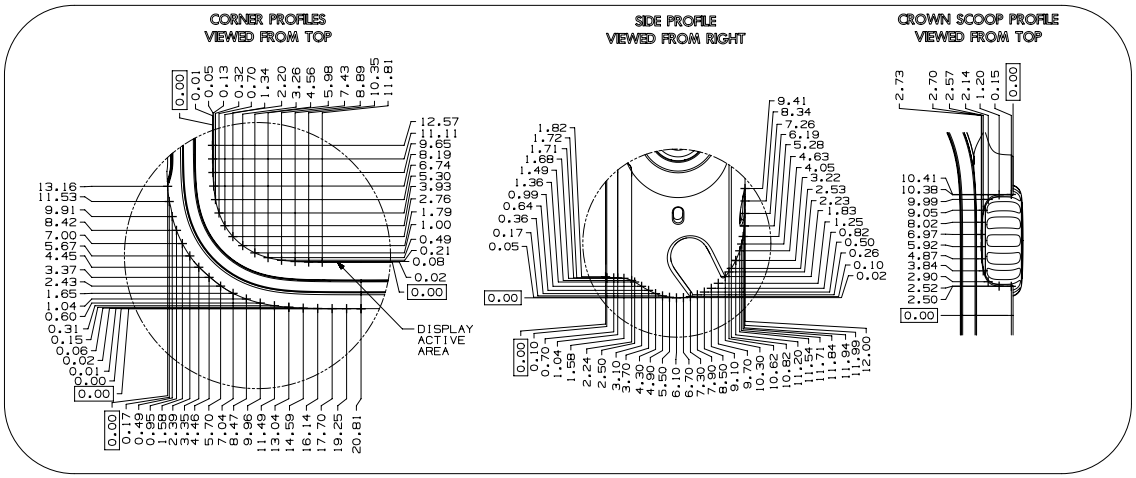

NOTICE OF PROPRIETARY PROPERTY:
THE INFORMATION CONTAINED HEREIN IS THE PROPRIETARY PROPERTY OF APPLE INC. THE POSSESSOR AGREES TO THE FOLLOWING:
(i) TO MAINTAIN THIS DOCUMENT IN CONFIDENCE
(ii) NOT TO REPRODUCE OR COPY IT
(iii) NOT TO REVEAL OR PUBLISH IT IN WHOLE OR PART
(iv) ALL RIGHTS RESERVED

Apple Inc.

SIZE	DRAWING NUMBER	REV.
D	APPLE WATCH ULTRA	01

SCALE: NONE SHT 2 OF 3

58.188 Apple Watch Ultra, 3 of 3

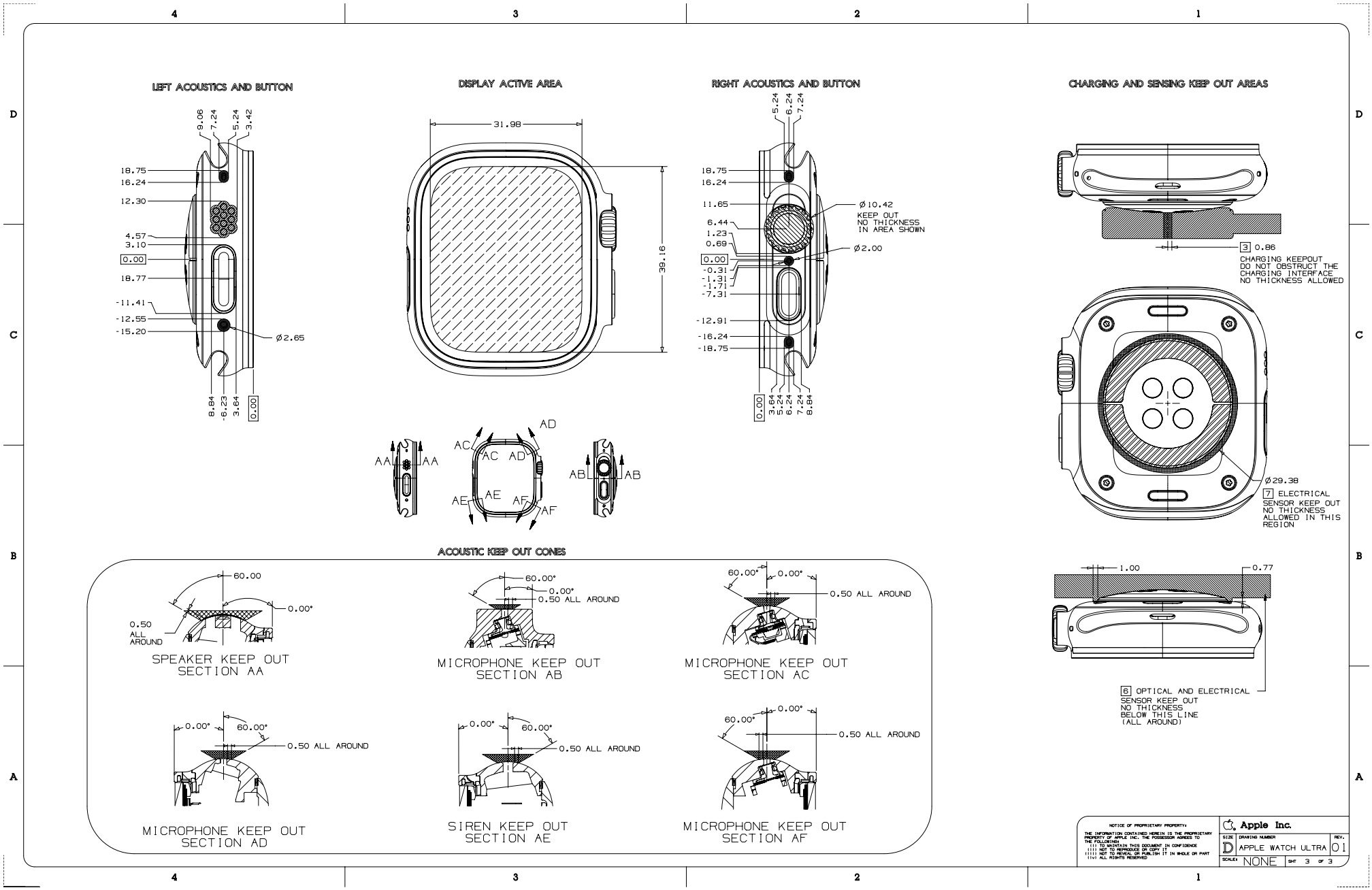

Copyright © 2024 Apple Inc. All Rights Reserved.

58.189 Apple Watch Series 8, 45 mm

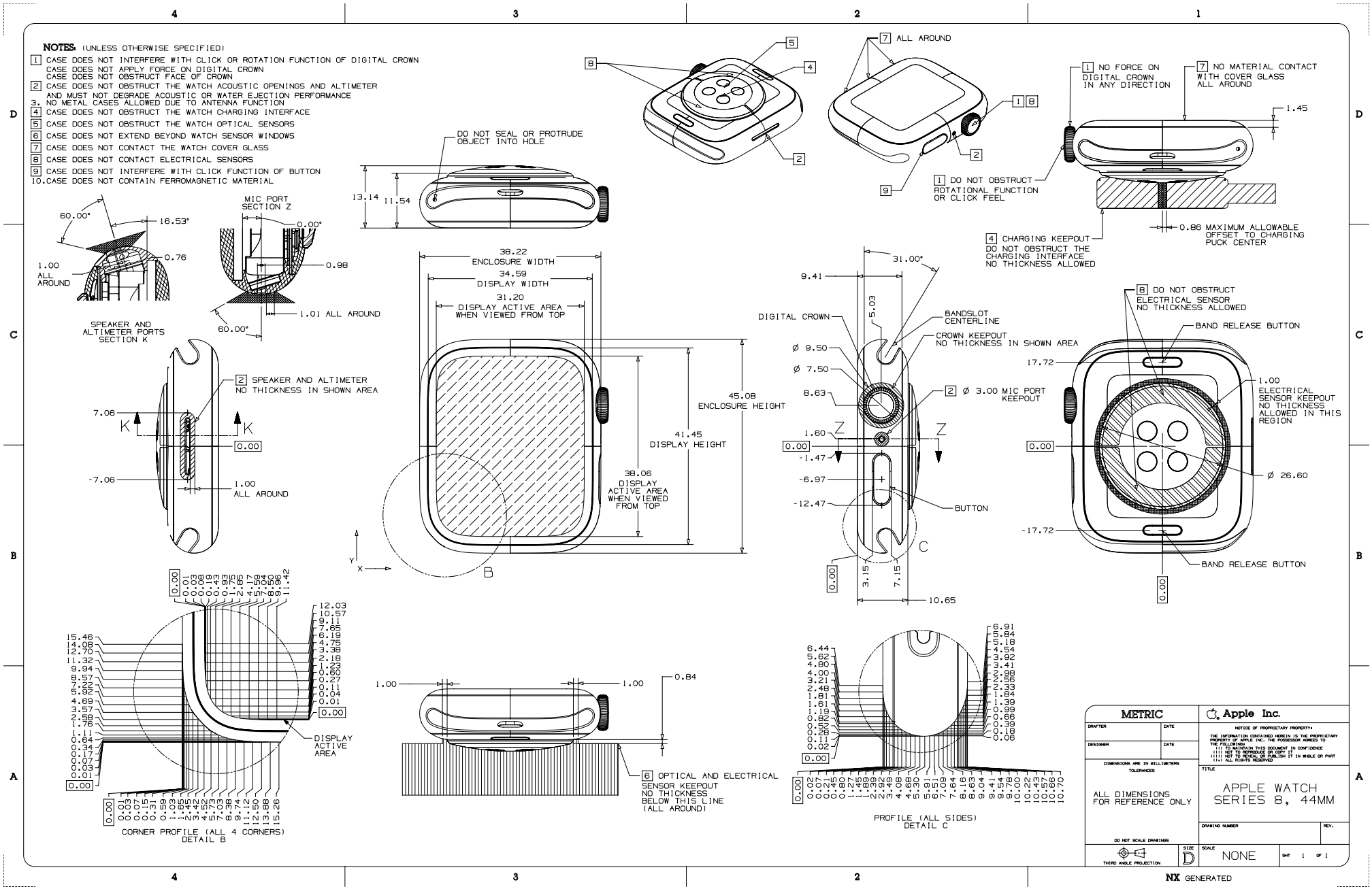

58.190 Apple Watch Series 8, 41 mm

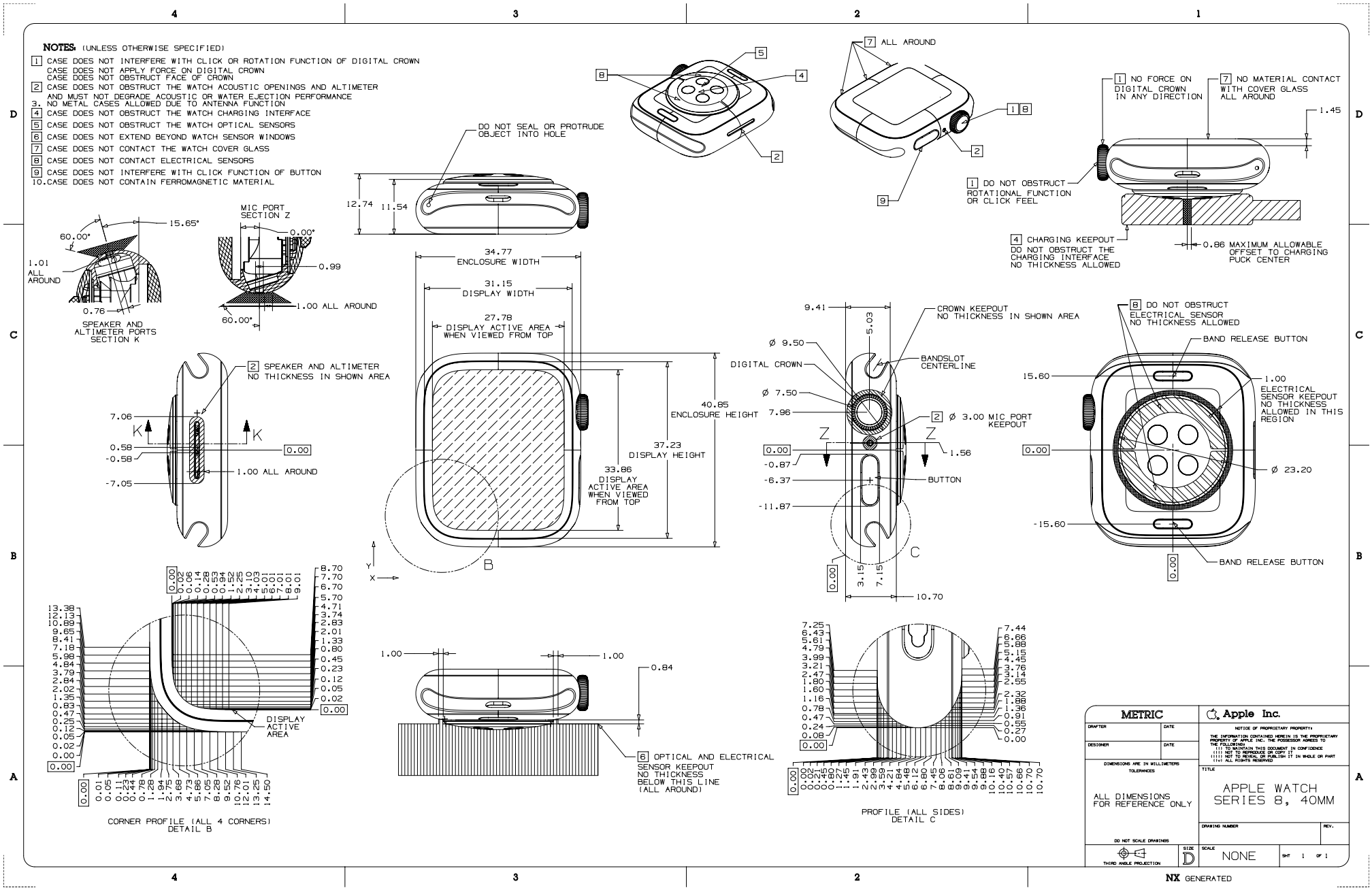

58.191 Apple Watch SE, 44 mm

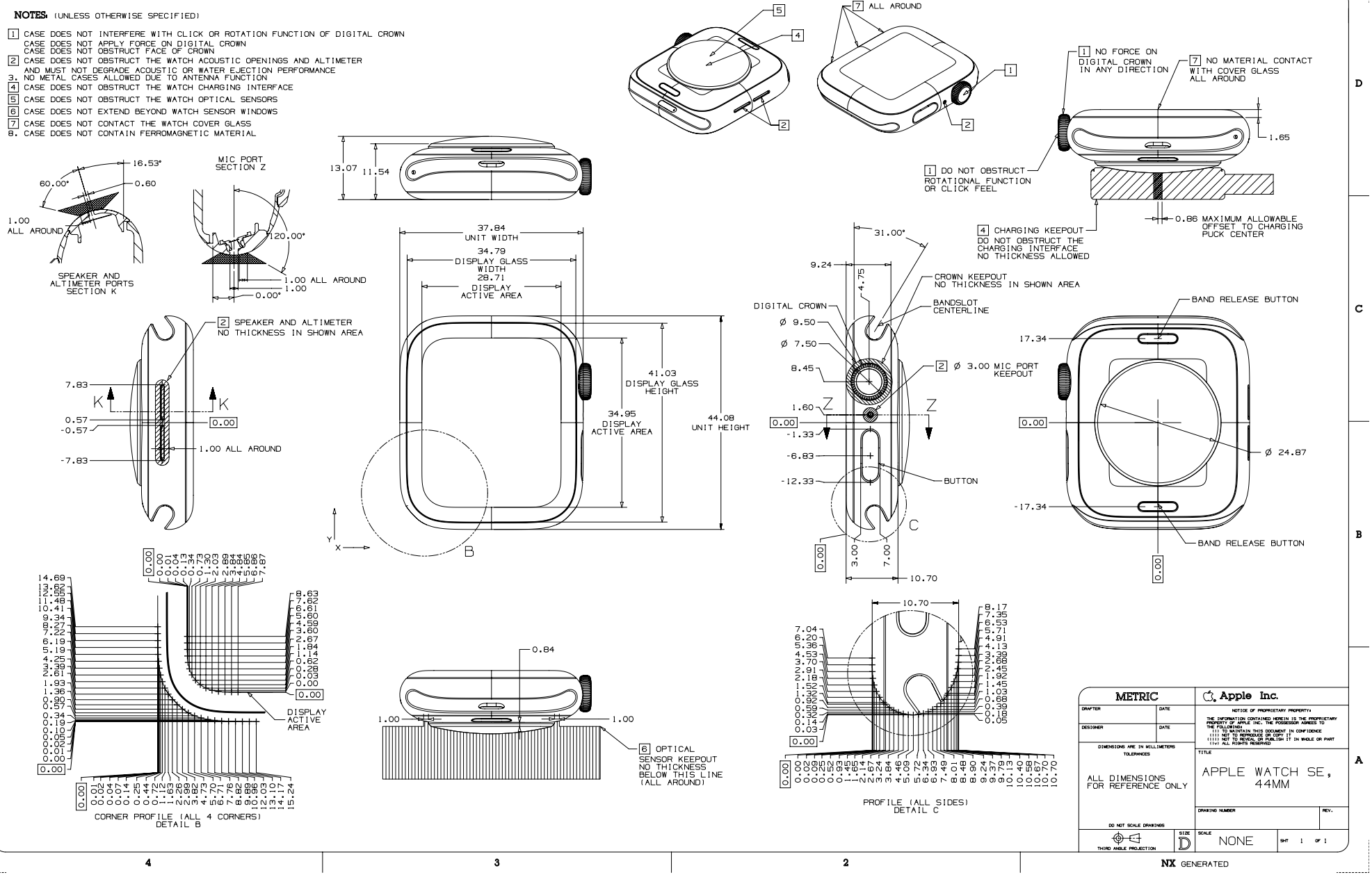

Copyright © 2024 Apple Inc. All Rights Reserved.

58.192 Apple Watch SE, 40 mm

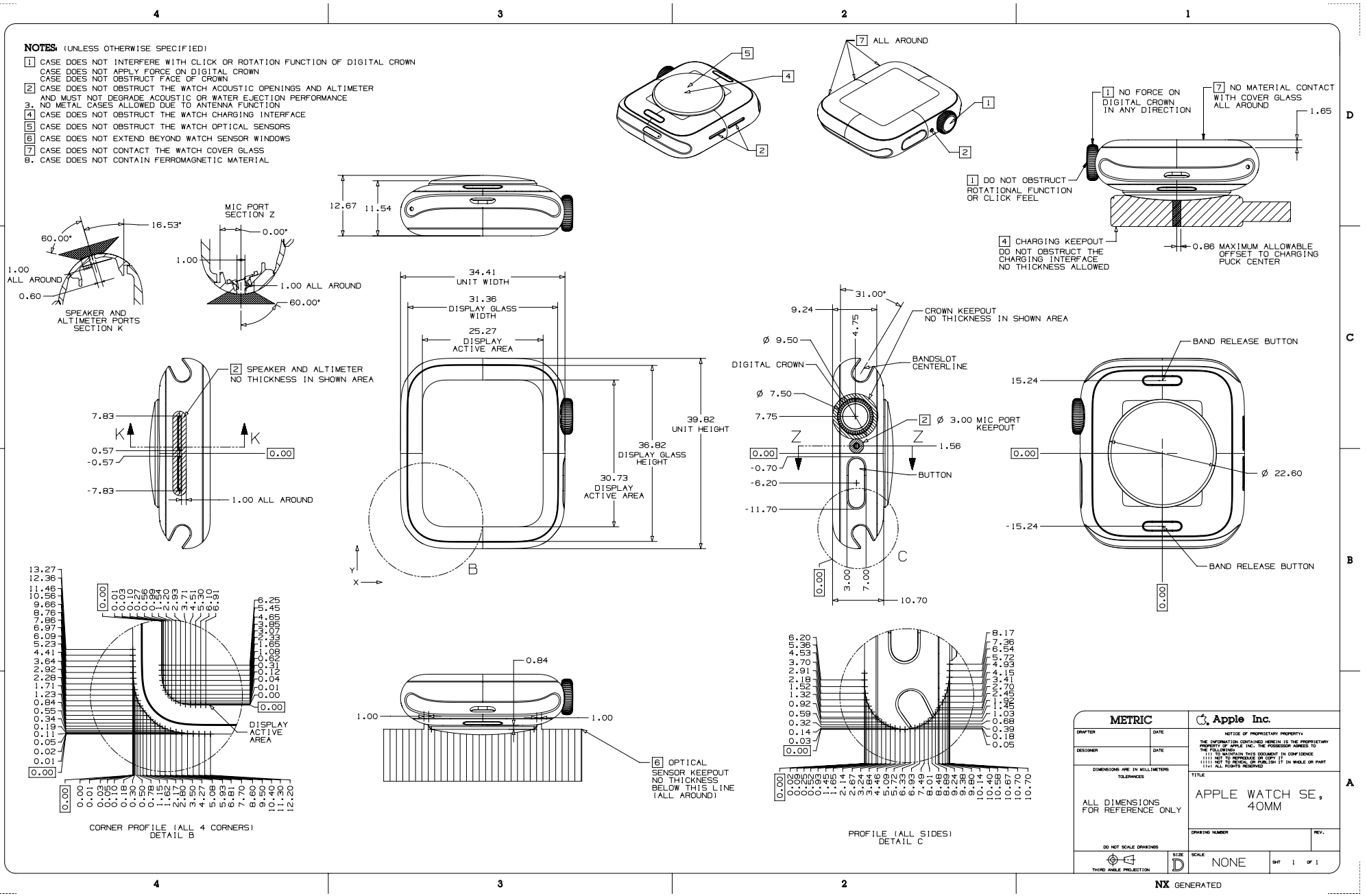

58.193 Apple Watch Series 7, 45 mm

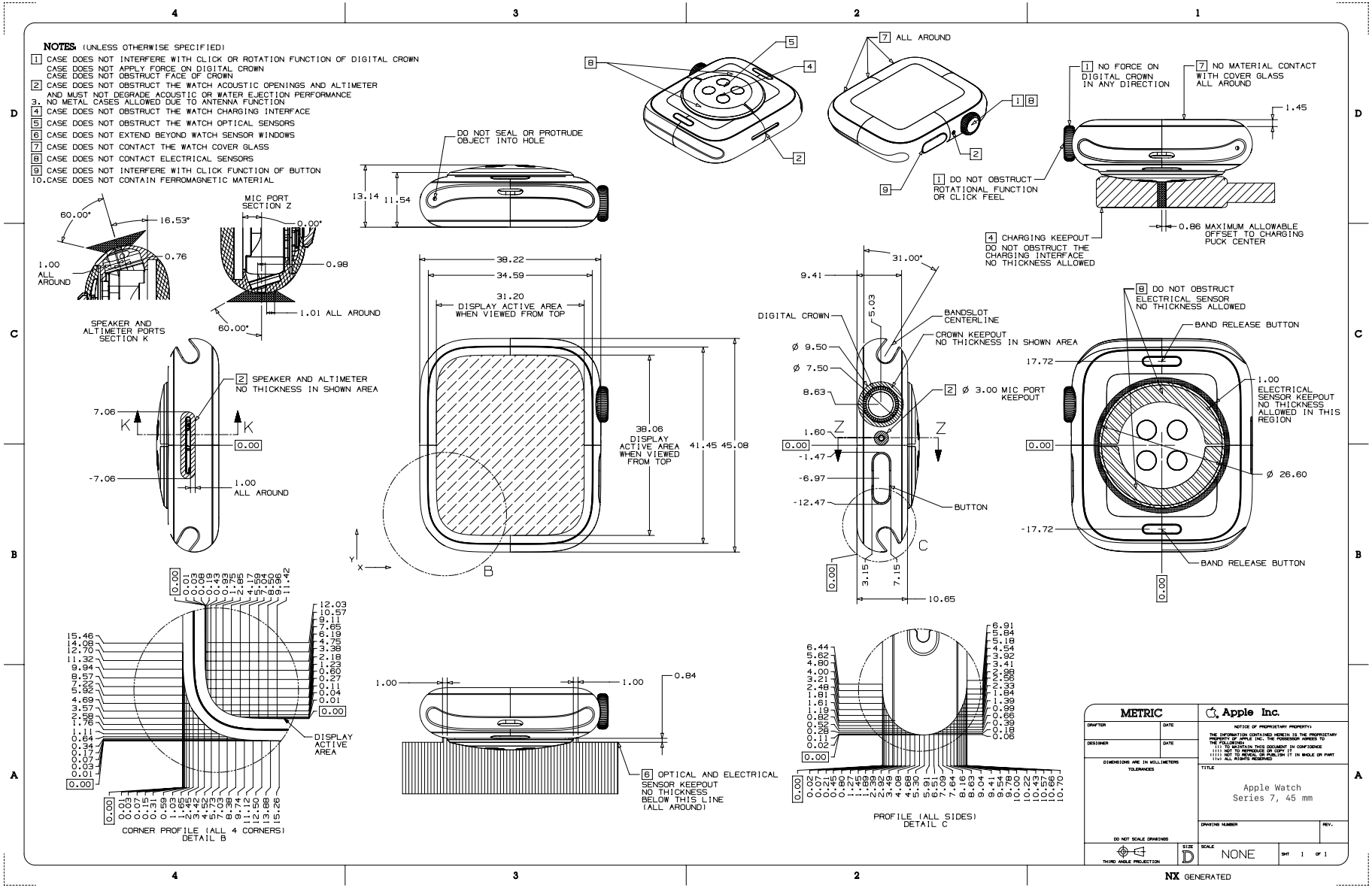

Copyright © 2024 Apple Inc. All Rights Reserved.

58.194 Apple Watch Series 7, 41 mm

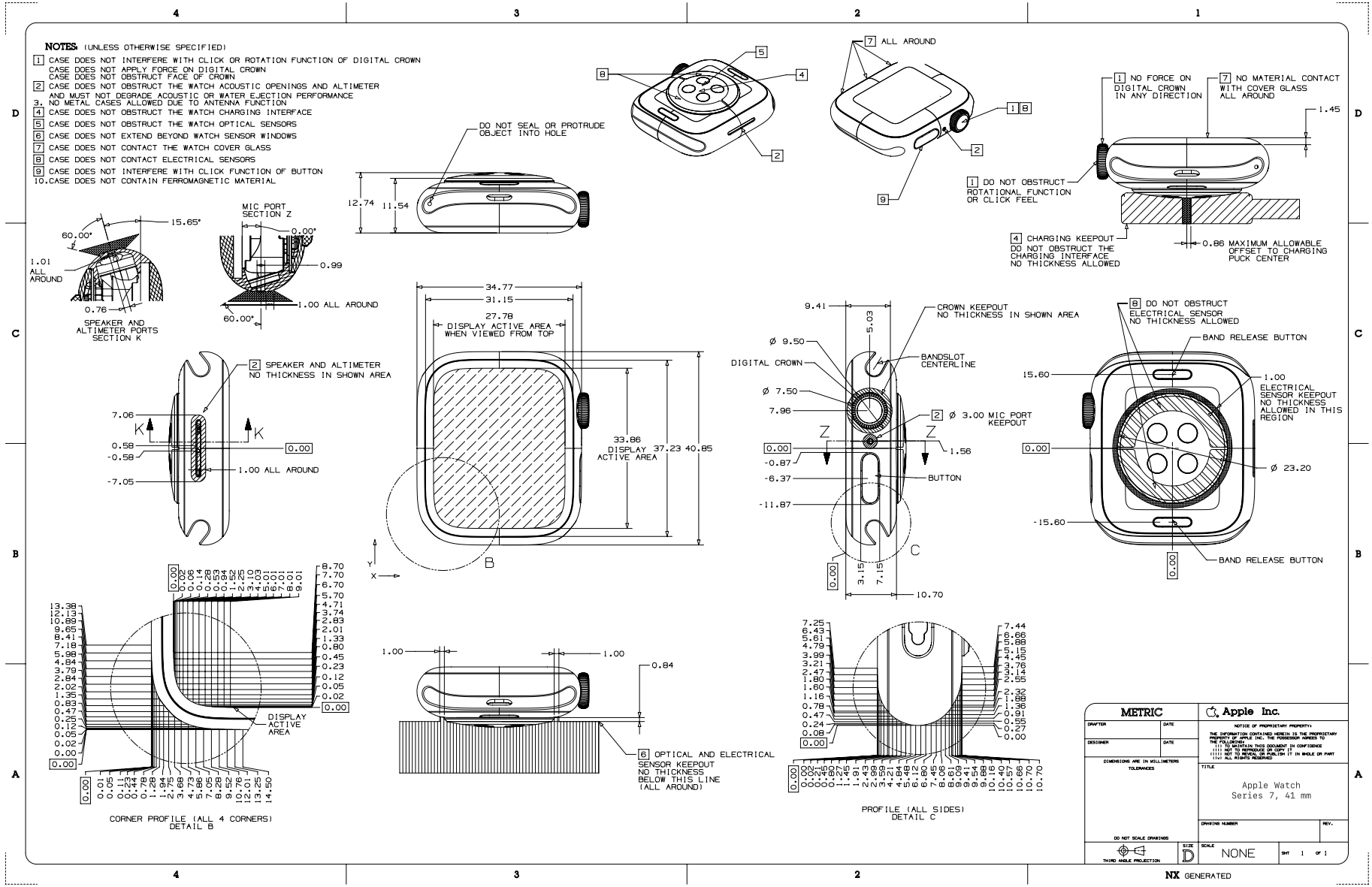

58.195 Apple Watch Series 6, 44 mm

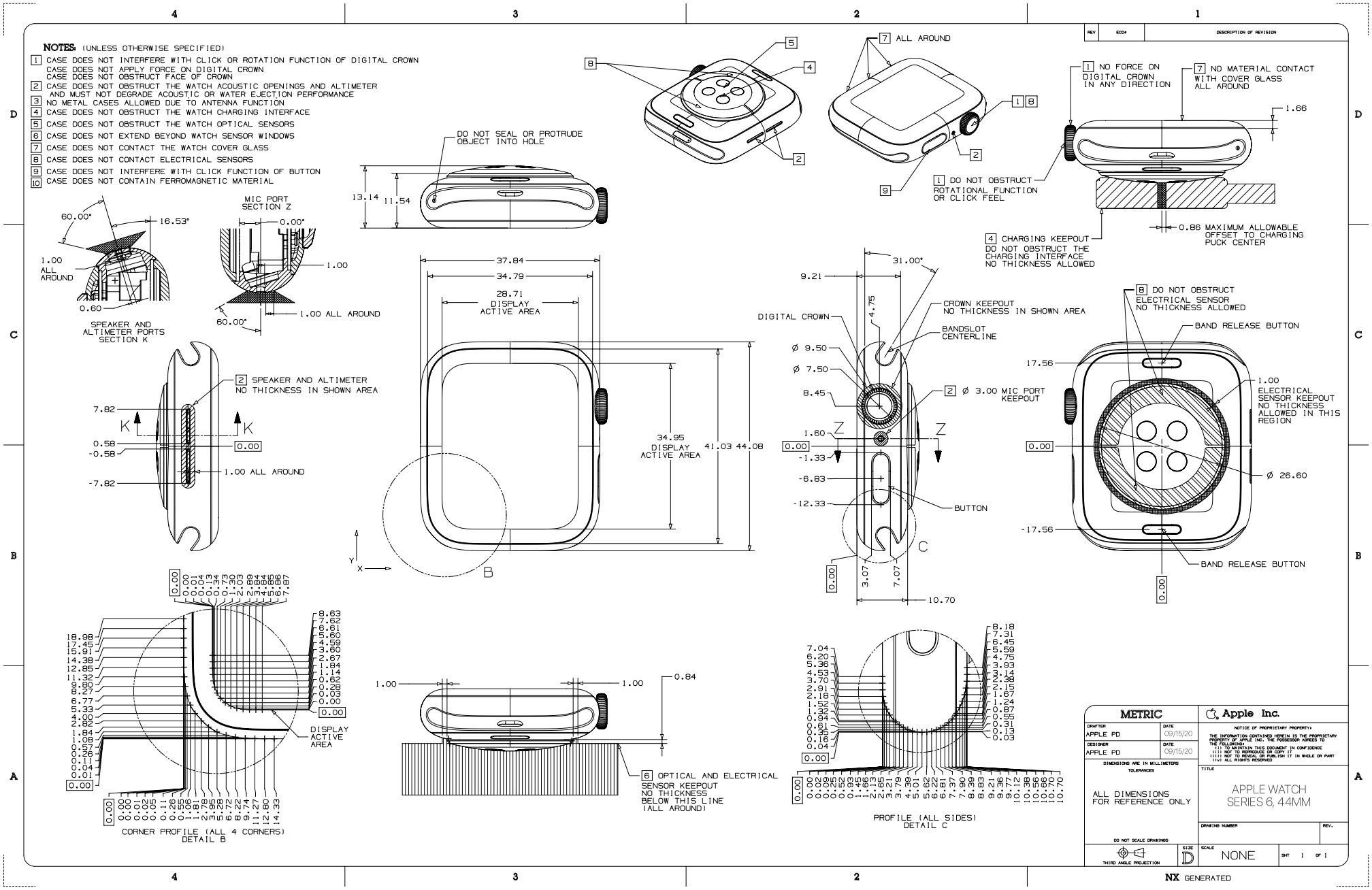

Copyright © 2024 Apple Inc. All Rights Reserved.

58.196 Apple Watch Series 6, 40 mm

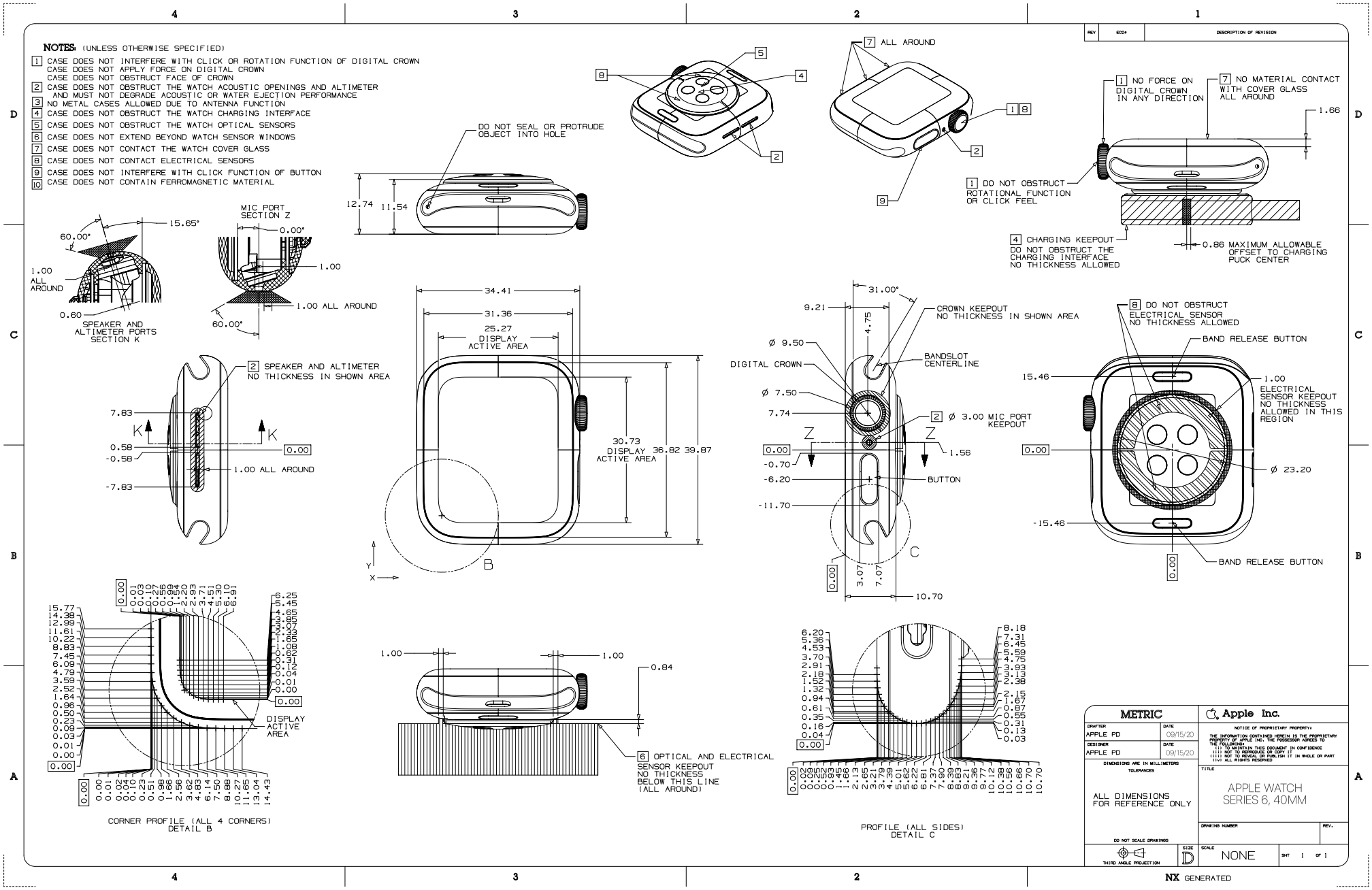

58.197 Apple Watch SE (1st generation), 44 mm

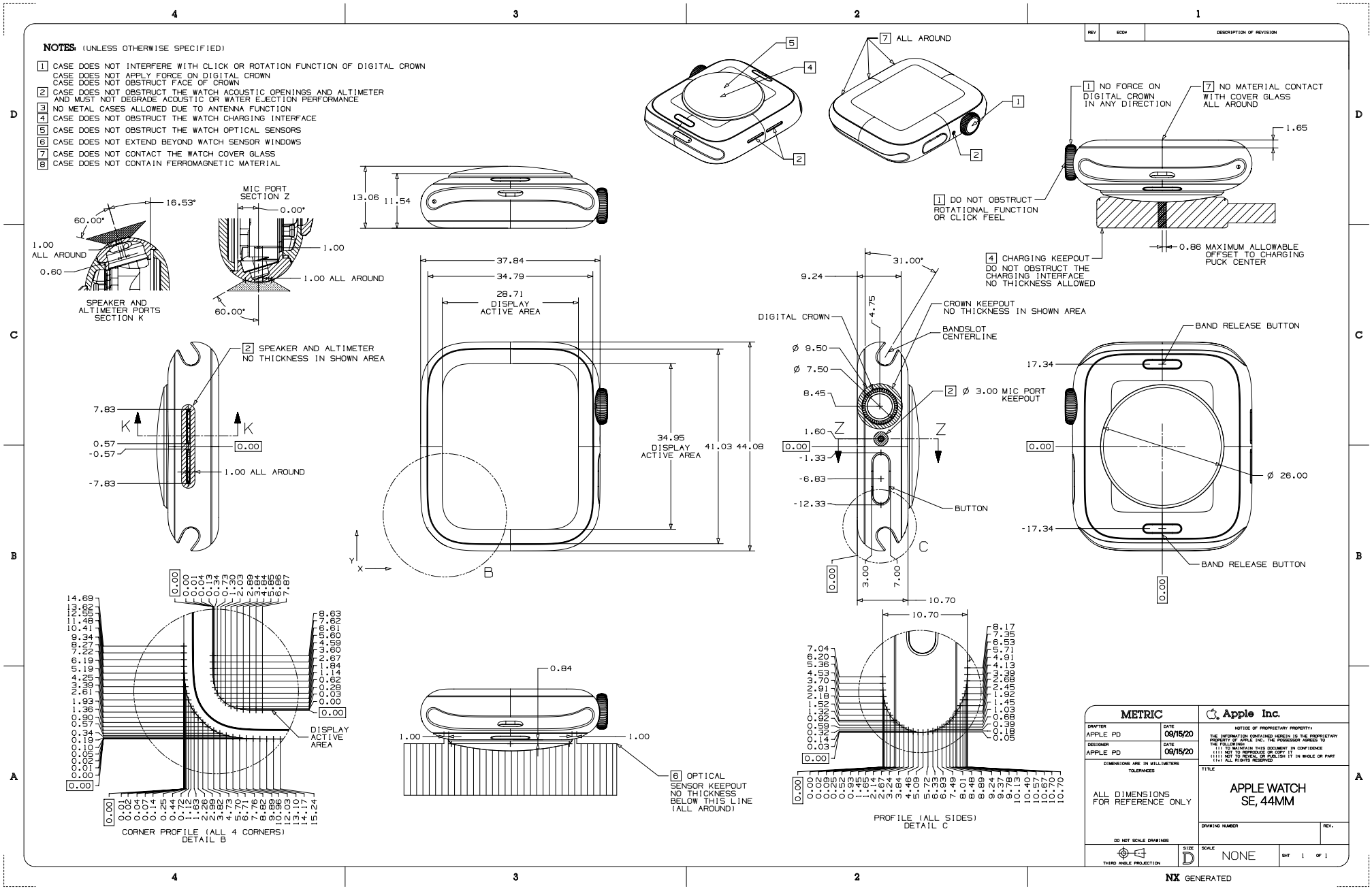

58.198 Apple Watch SE (1st generation), 40 mm

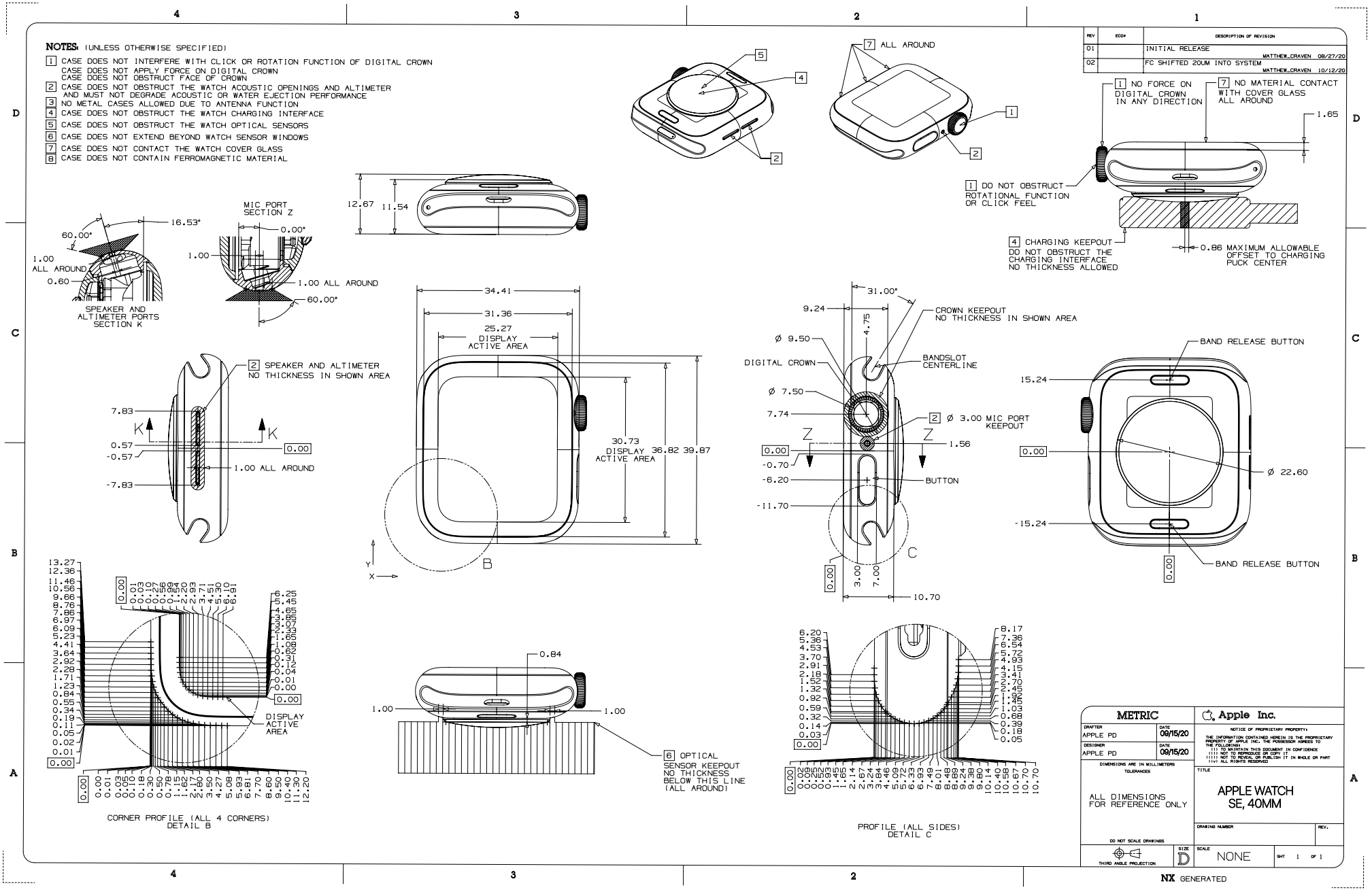

58.199 Apple Watch Series 5, 44 mm

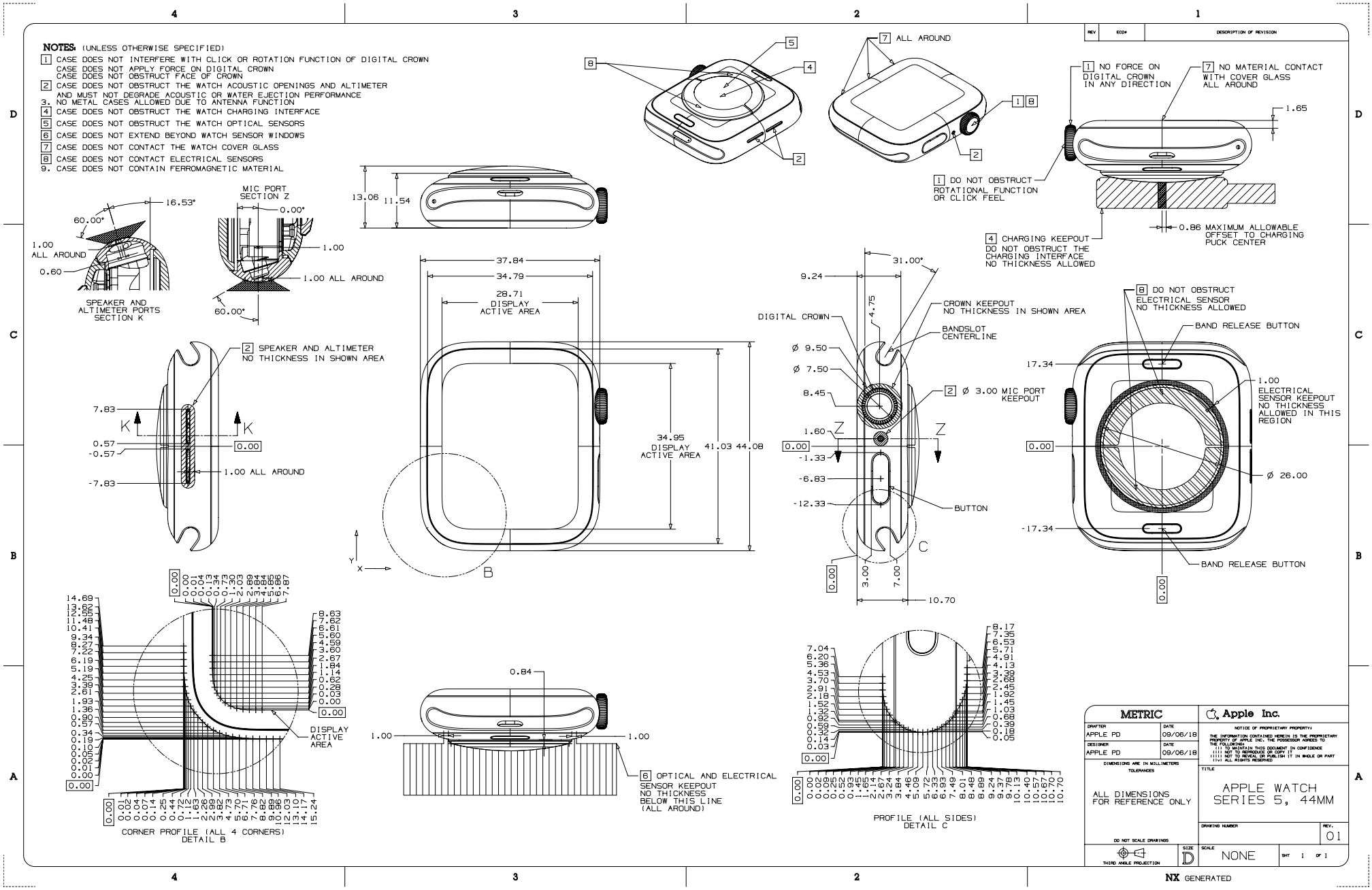

Copyright © 2024 Apple Inc. All Rights Reserved.

58.200 Apple Watch Series 5, 40 mm

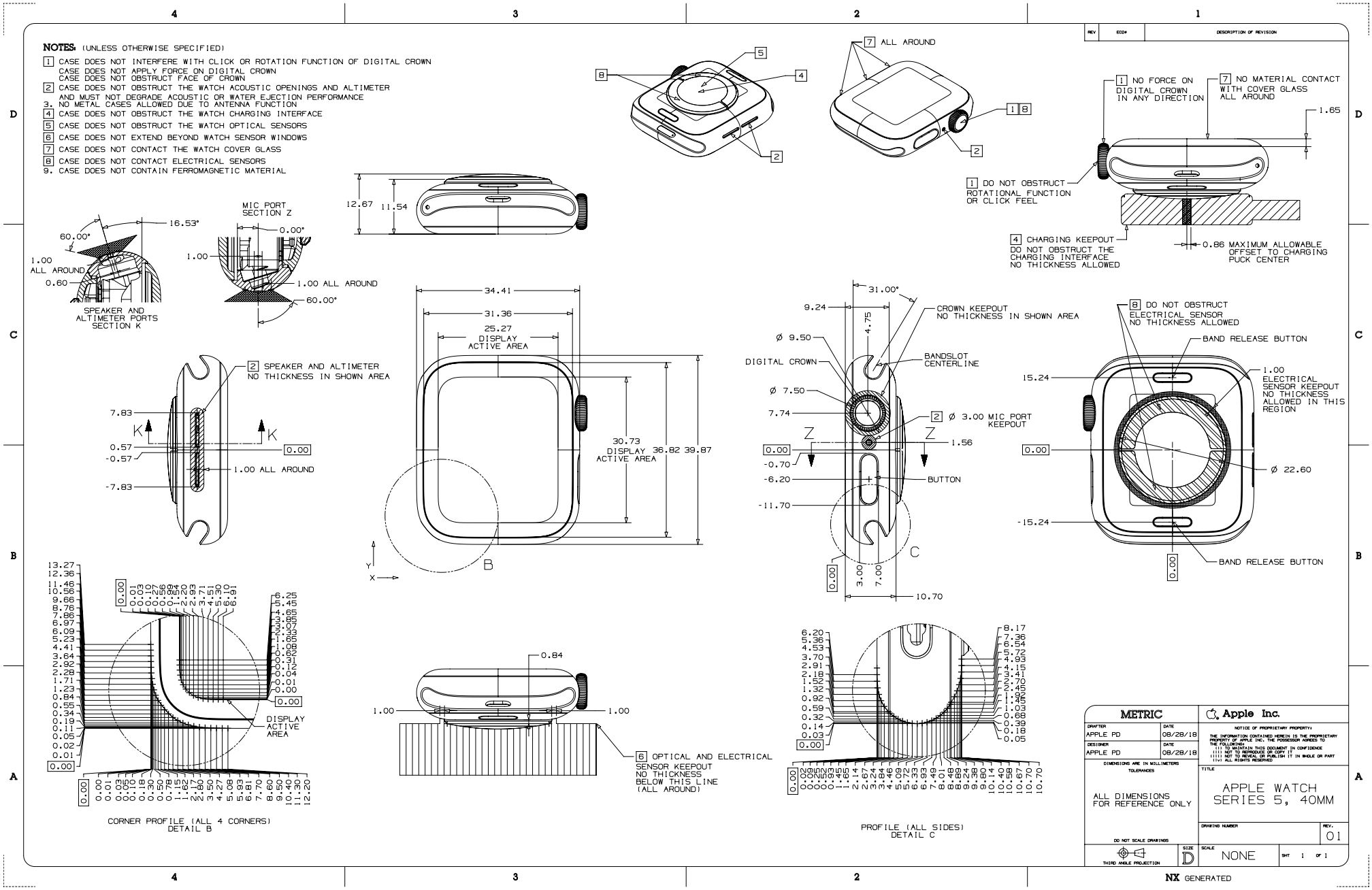

Copyright © 2024 Apple Inc. All Rights Reserved.

58.201 Apple Watch Series 5 Ceramic, 44 mm

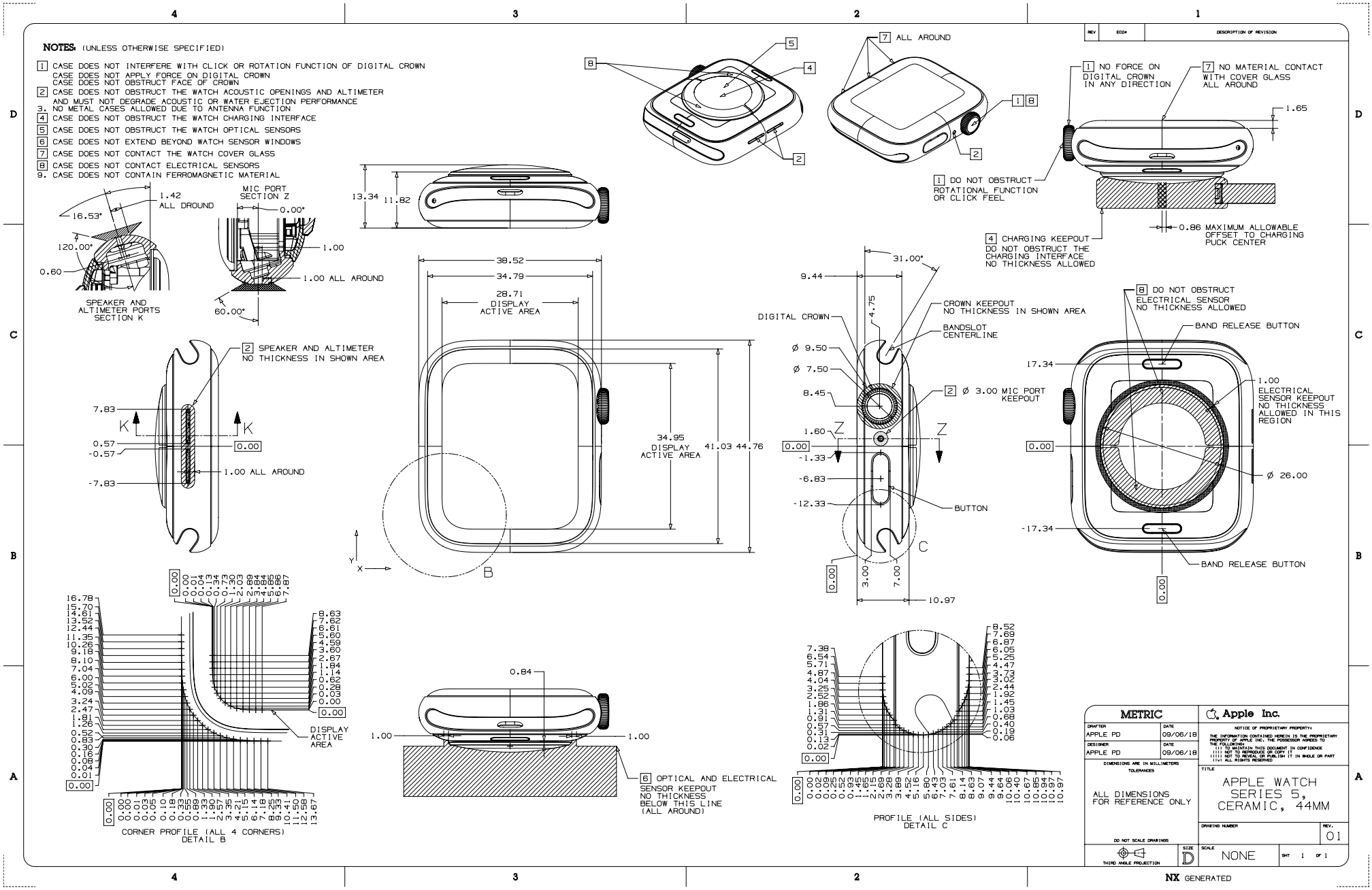

Copyright © 2024 Apple Inc. All Rights Reserved.

58.202 Apple Watch Series 5 Ceramic, 40 mm

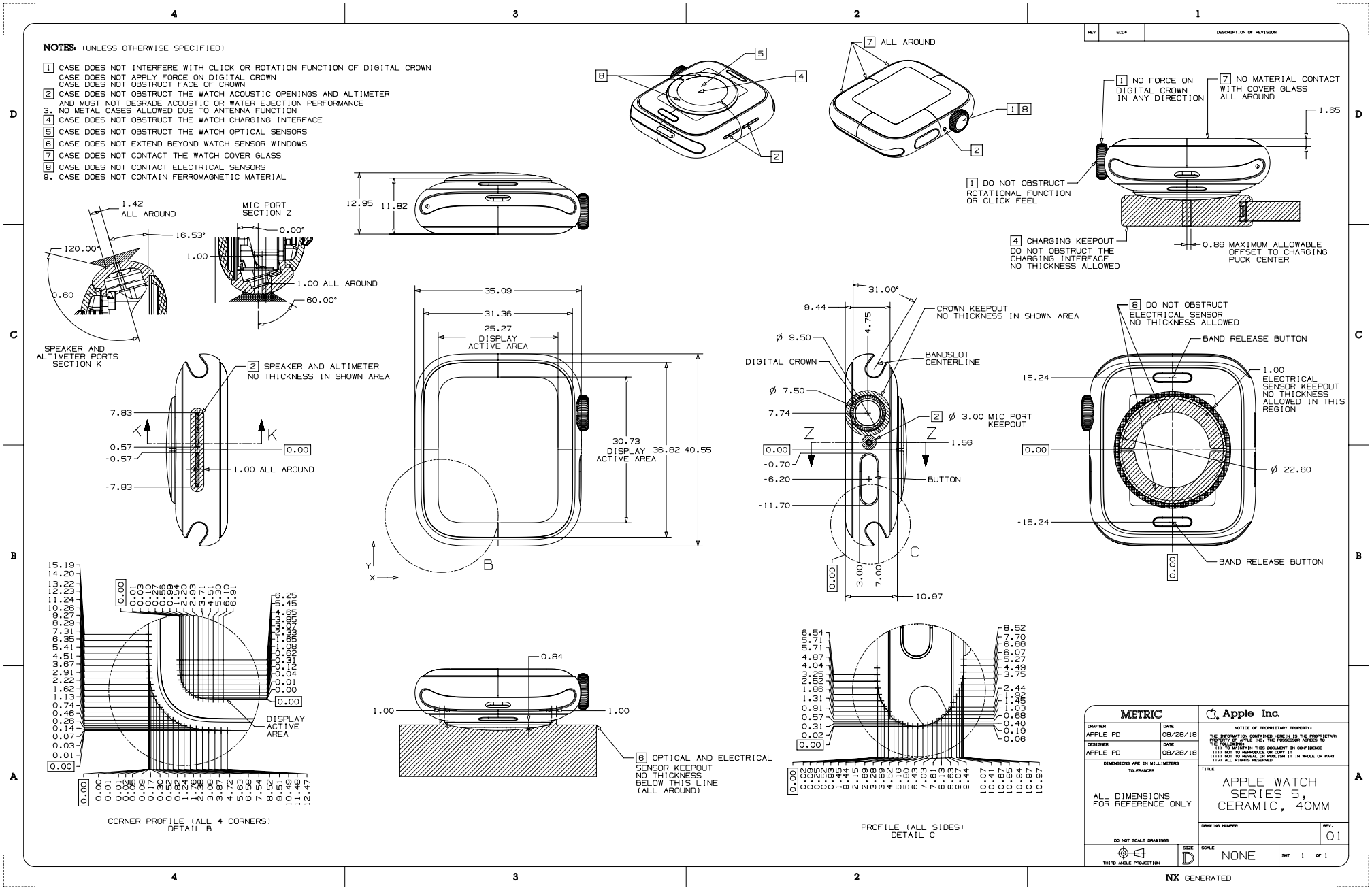
NOTES: (UNLESS OTHERWISE SPECIFIED)
1 CASE DOES NOT INTERFERE WITH CLICK OR ROTATION FUNCTION OF DIGITAL CROWN
CASE DOES NOT APPLY FORCE ON DIGITAL CROWN
CASE DOES NOT OBSTRUCT FACE OF CROWN
2 CASE DOES NOT OBSTRUCT THE WATCH ACOUSTIC OPENINGS AND ALTIMETER
AND MUST NOT DEGRADE ACOUSTIC OR WATER EJECTION PERFORMANCE
3. NO METAL CASES ALLOWED DUE TO ANTENNA FUNCTION
4 CASE DOES NOT OBSTRUCT THE WATCH CHARGING INTERFACE
5 CASE DOES NOT OBSTRUCT THE WATCH OPTICAL SENSORS
6 CASE DOES NOT EXTEND BEYOND WATCH SENSOR WINDOWS
7 CASE DOES NOT CONTACT THE WATCH COVER GLASS
8 CASE DOES NOT CONTACT ELECTRICAL SENSORS
9. CASE DOES NOT CONTAIN FERROMAGNETIC MATERIAL
REV
ECO#
DESCRIPTION OF REVISION
7 ALL AROUND
1 NO FORCE ON DIGITAL CROWN IN ANY DIRECTION
7 NO MATERIAL CONTACT WITH COVER GLASS ALL AROUND
1.65
1 DO NOT OBSTRUCT ROTATIONAL FUNCTION OR CLICK FEEL
4 CHARGING KEEPOUT
DO NOT OBSTRUCT THE CHARGING INTERFACE
NO THICKNESS ALLOWED
0.86 MAXIMUM ALLOWABLE OFFSET TO CHARGING PUCK CENTER
12.95
11.82
1.42 ALL AROUND
16.53°
120.00°
0.60
SPEAKER AND ALTIMETER PORTS SECTION K
MIC PORT SECTION Z
0.00°
1.00
1.00 ALL AROUND
60.00°
2 SPEAKER AND ALTIMETER NO THICKNESS IN SHOWN AREA
7.83
K
0.57
-0.57
-7.83
0.00
1.00 ALL AROUND
35.09
31.36
25.27 DISPLAY ACTIVE AREA
30.73 DISPLAY ACTIVE AREA
36.82
40.55
B
Y
X
31.00°
9.44
CROWN KEEPOUT NO THICKNESS IN SHOWN AREA
4.75
Ø 9.50
DIGITAL CROWN
BANDSLOT CENTERLINE
Ø 7.50
7.74
2 Ø 3.00 MIC PORT KEEPOUT
Z
1.56
0.00
-0.70
-6.20
BUTTON
-11.70
C
3.00
7.00
10.97
8 DO NOT OBSTRUCT ELECTRICAL SENSOR NO THICKNESS ALLOWED
BAND RELEASE BUTTON
15.24
1.00 ELECTRICAL SENSOR KEEPOUT NO THICKNESS ALLOWED IN THIS REGION
Ø 22.60
-15.24
BAND RELEASE BUTTON
15.19
14.20
13.22
12.23
11.24
10.26
9.27
8.29
7.31
6.35
5.41
4.51
3.67
2.91
2.22
1.62
1.13
0.74
0.46
0.26
0.14
0.07
0.03
0.01
0.00
0.00 0.01 0.03 0.07 0.13 0.21 0.30 0.41 0.53 0.68 0.84 1.02 1.22 1.44 1.68 1.93 2.20 2.49 2.80 3.13 3.47 3.83 4.21 4.60 5.01 5.43 5.87 6.33 6.80 6.91
6.25
5.45
4.65
3.85
3.07
2.33
1.65
1.08
0.62
0.31
0.12
0.04
0.01
0.00
DISPLAY ACTIVE AREA
0.00 0.00 0.01 0.01 0.02 0.05 0.09 0.17 0.30 0.52 0.82 1.21 1.76 2.38 3.08 3.87 4.72 5.63 6.58 7.54 8.52 9.51 10.49 11.48 12.47
CORNER PROFILE (ALL 4 CORNERS) DETAIL B
0.84
1.00
1.00
6 OPTICAL AND ELECTRICAL SENSOR KEEPOUT NO THICKNESS BELOW THIS LINE (ALL AROUND)
6.54
5.71
5.71
4.87
4.04
3.25
2.52
1.86
1.31
0.91
0.57
0.31
0.02
0.00
8.52
7.70
6.88
6.07
5.27
4.49
3.75
2.44
1.92
1.45
1.03
0.68
0.40
0.19
0.06
0.00 0.00 0.00

58.203 Apple Watch Series 4, 44 mm

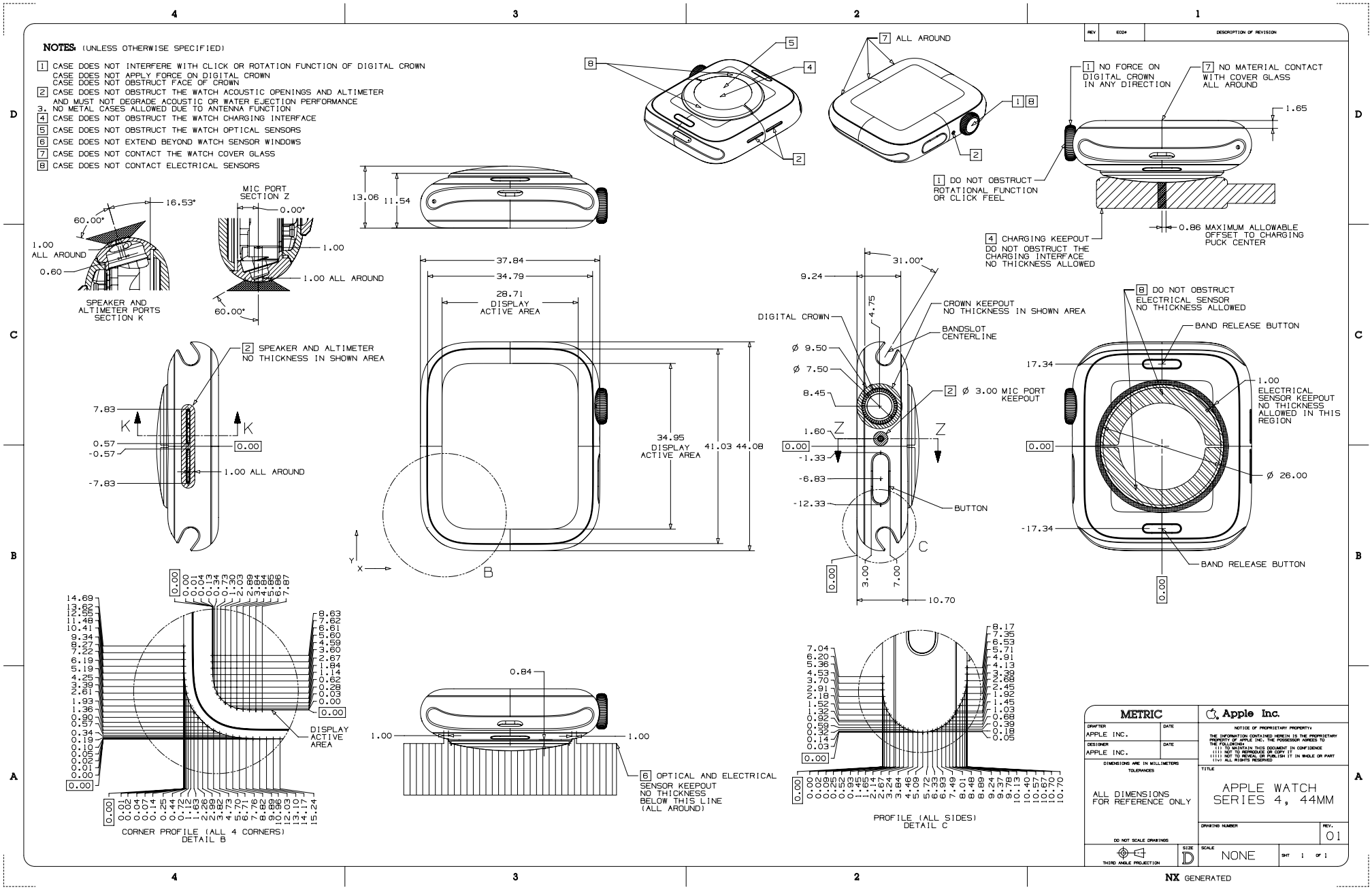

58.204 Apple Watch Series 4, 40 mm

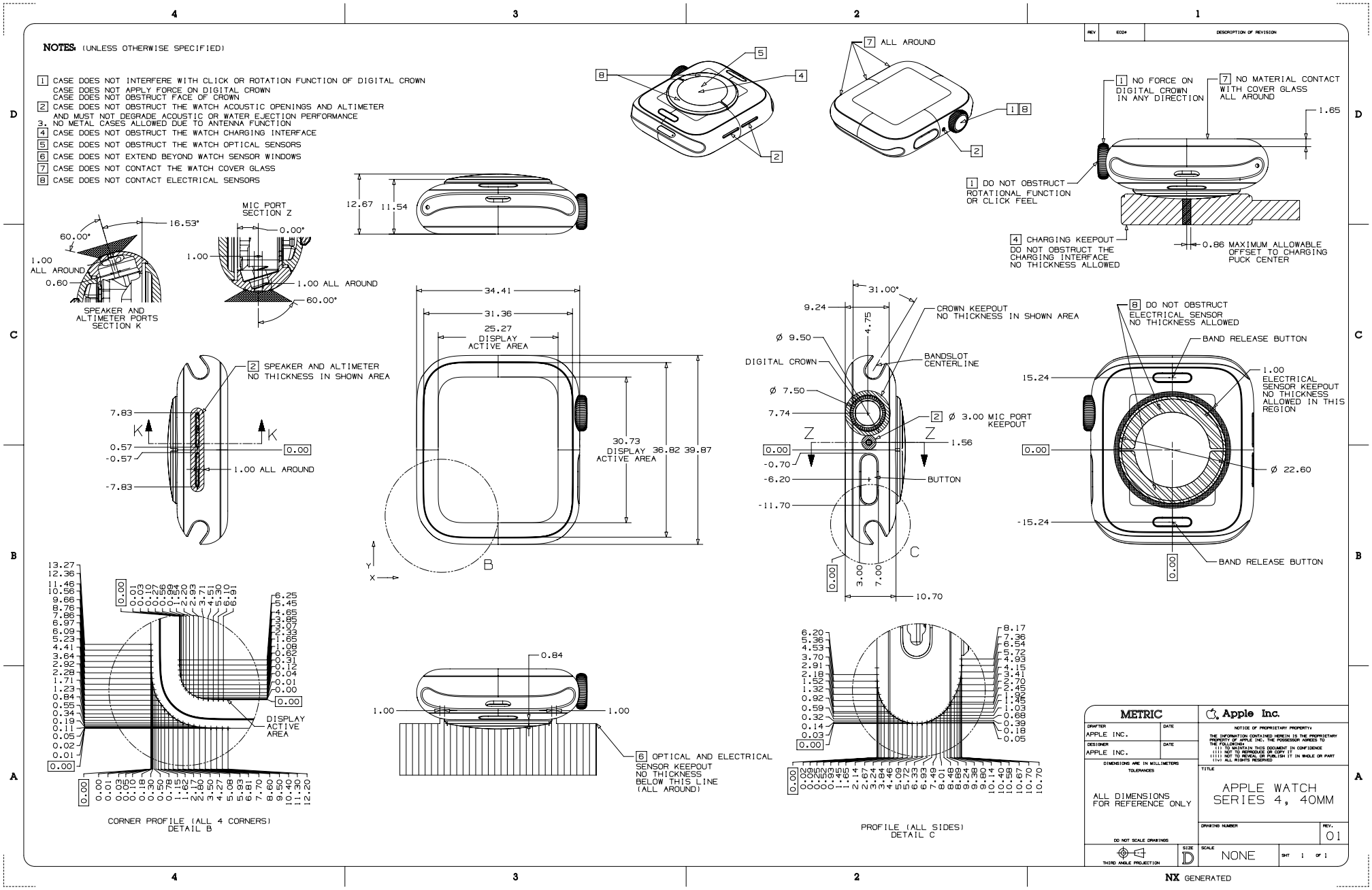

58.205 Apple Watch Series 3 Ceramic, 42 mm

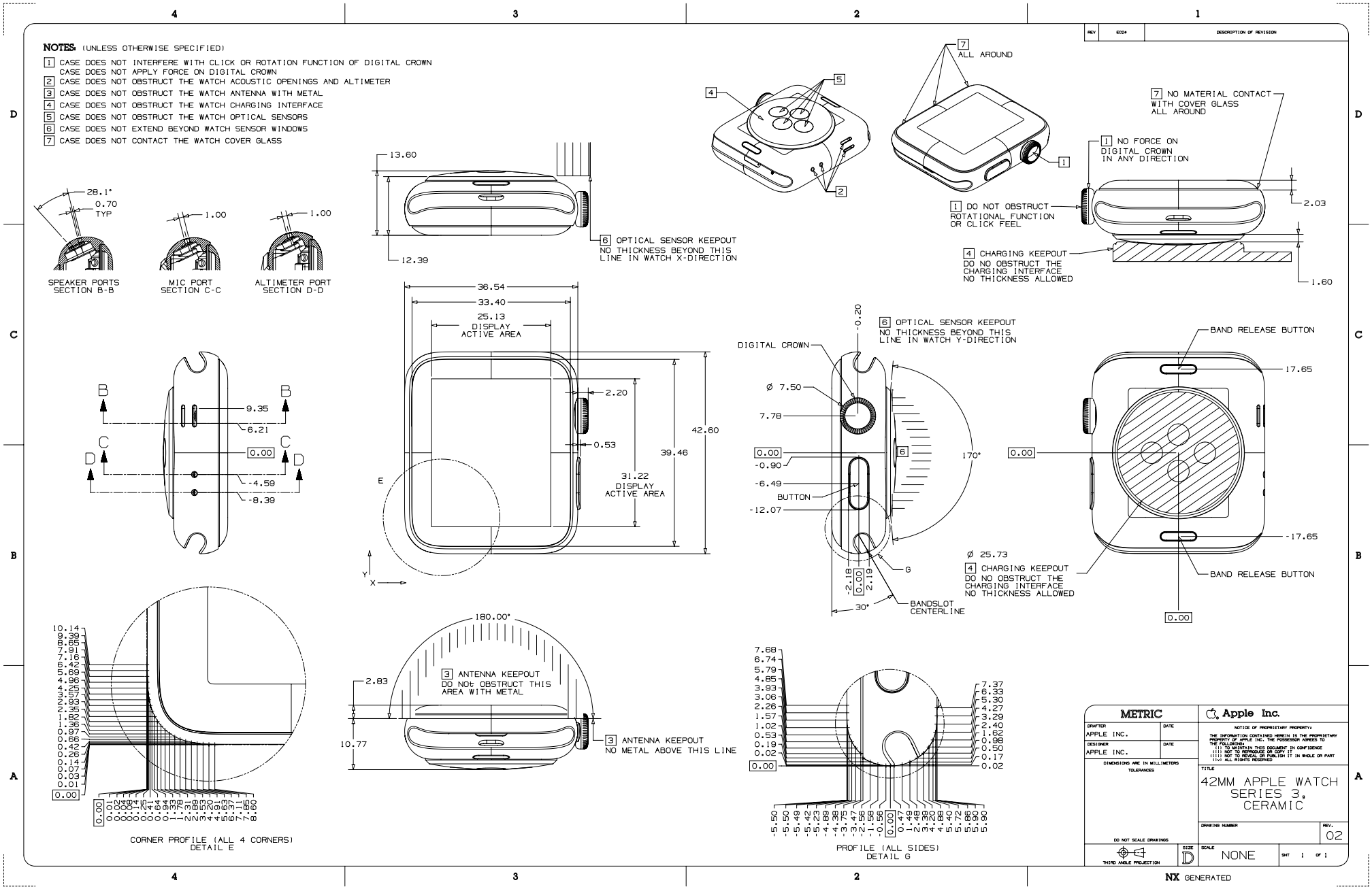

58.206 Apple Watch Series 3 Ceramic, 38 mm

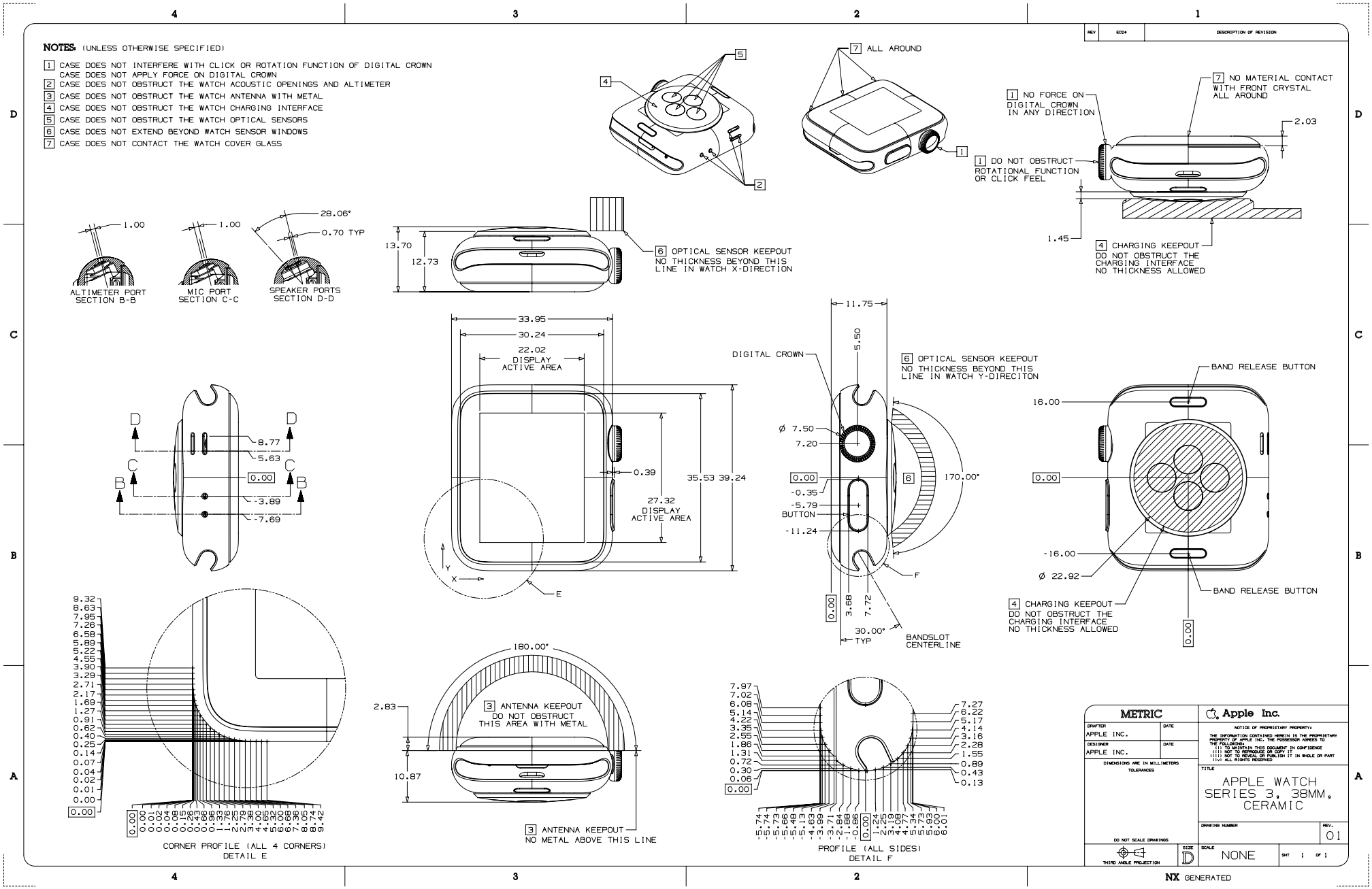

Copyright © 2024 Apple Inc. All Rights Reserved.

58.207 Apple Watch Series 3 Metal, 42 mm

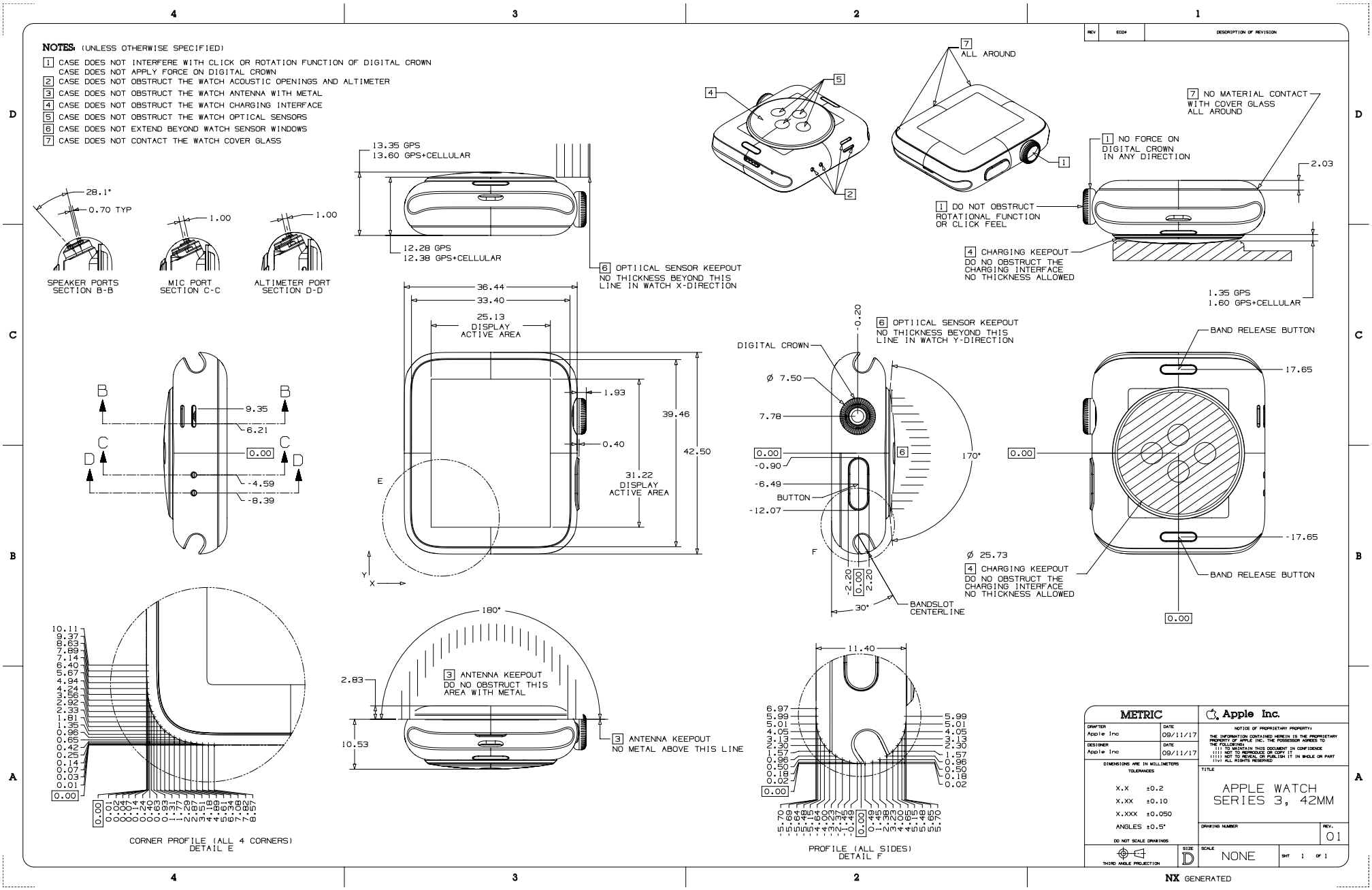

Copyright © 2024 Apple Inc. All Rights Reserved.

58.208 Apple Watch Series 3 Metal, 38 mm

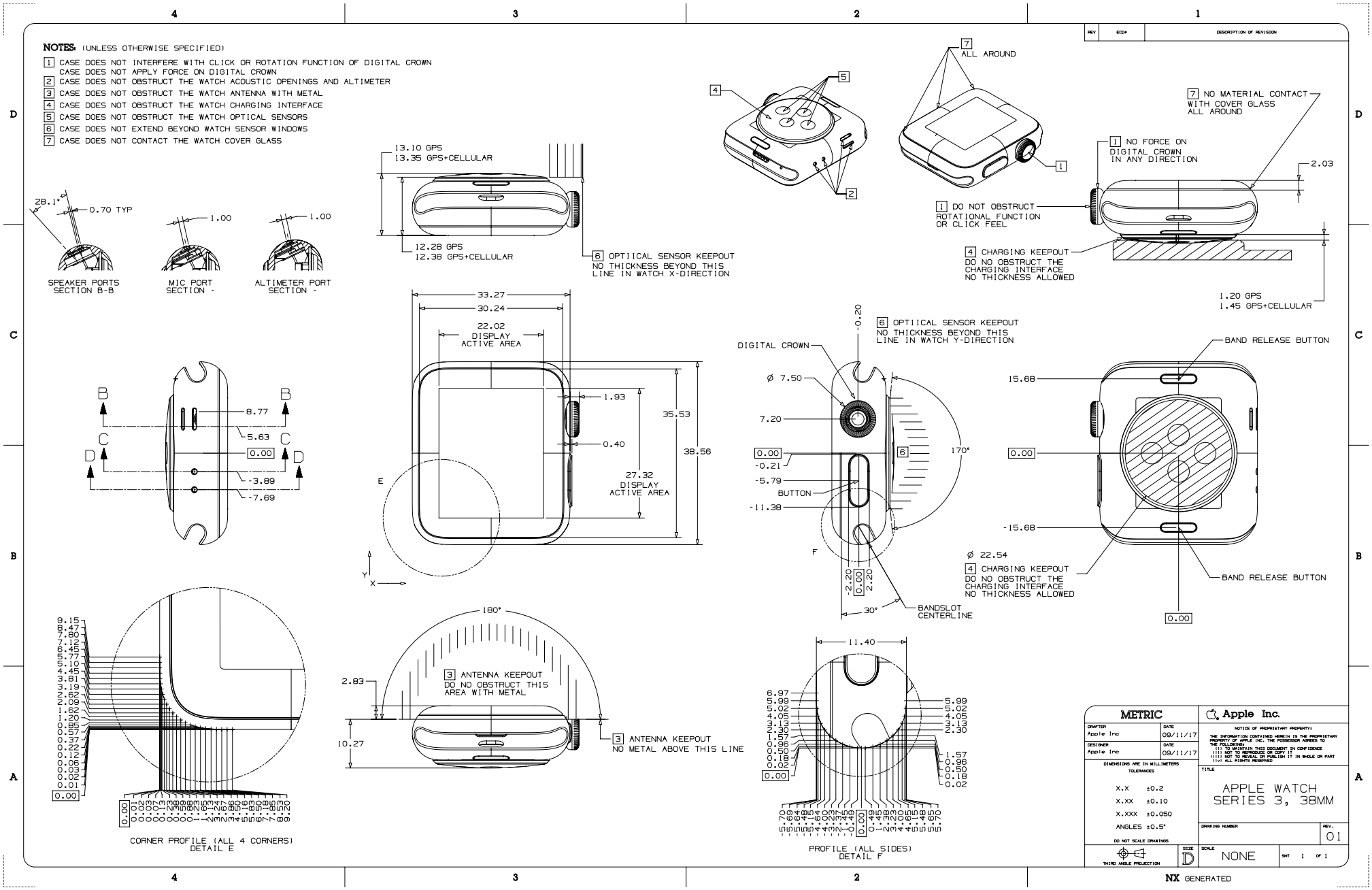

58.209 Apple Watch Series 2 Ceramic, 42 mm

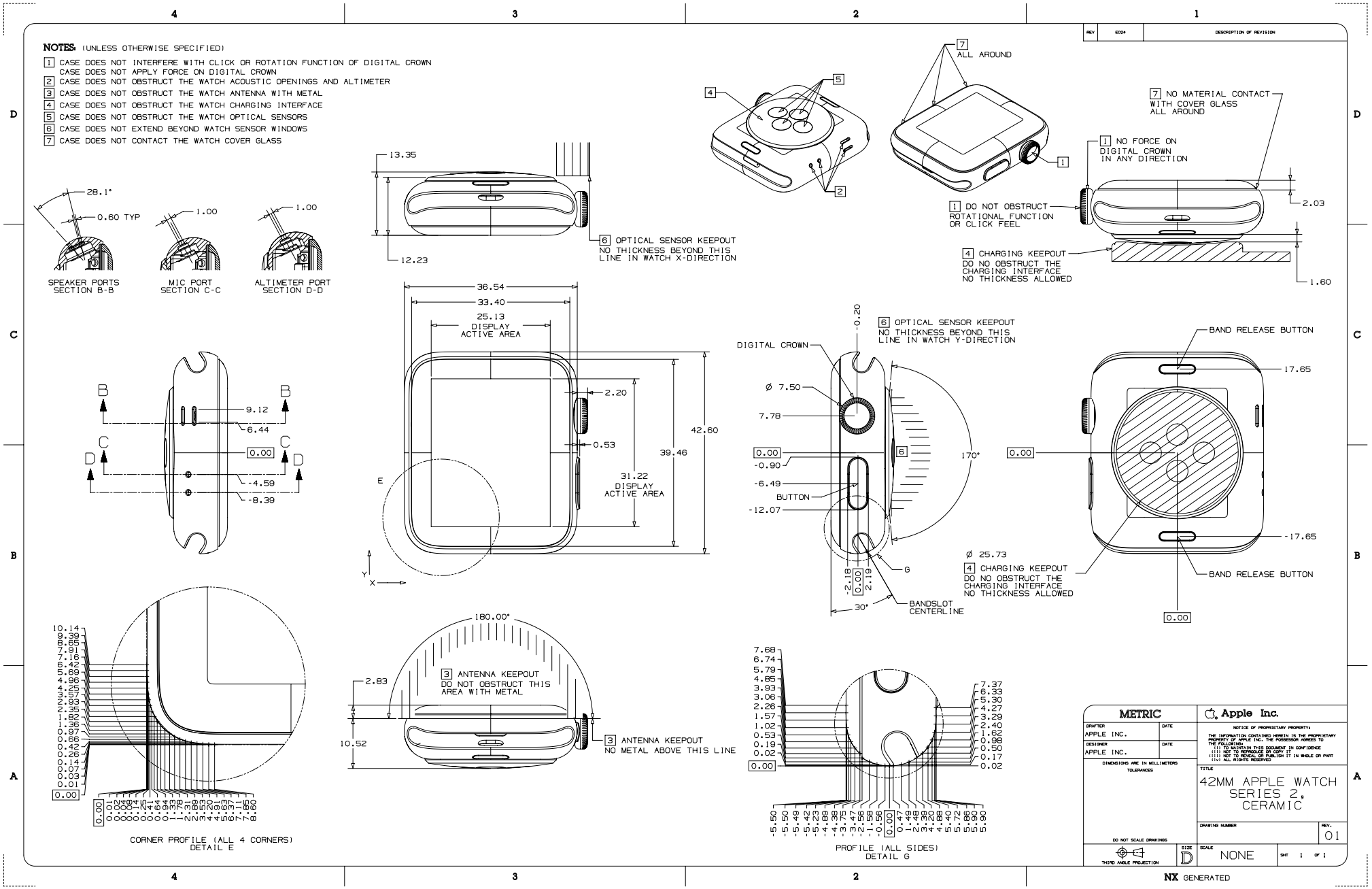

Copyright © 2024 Apple Inc. All Rights Reserved.

58.210 Apple Watch Series 2 Ceramic, 38 mm

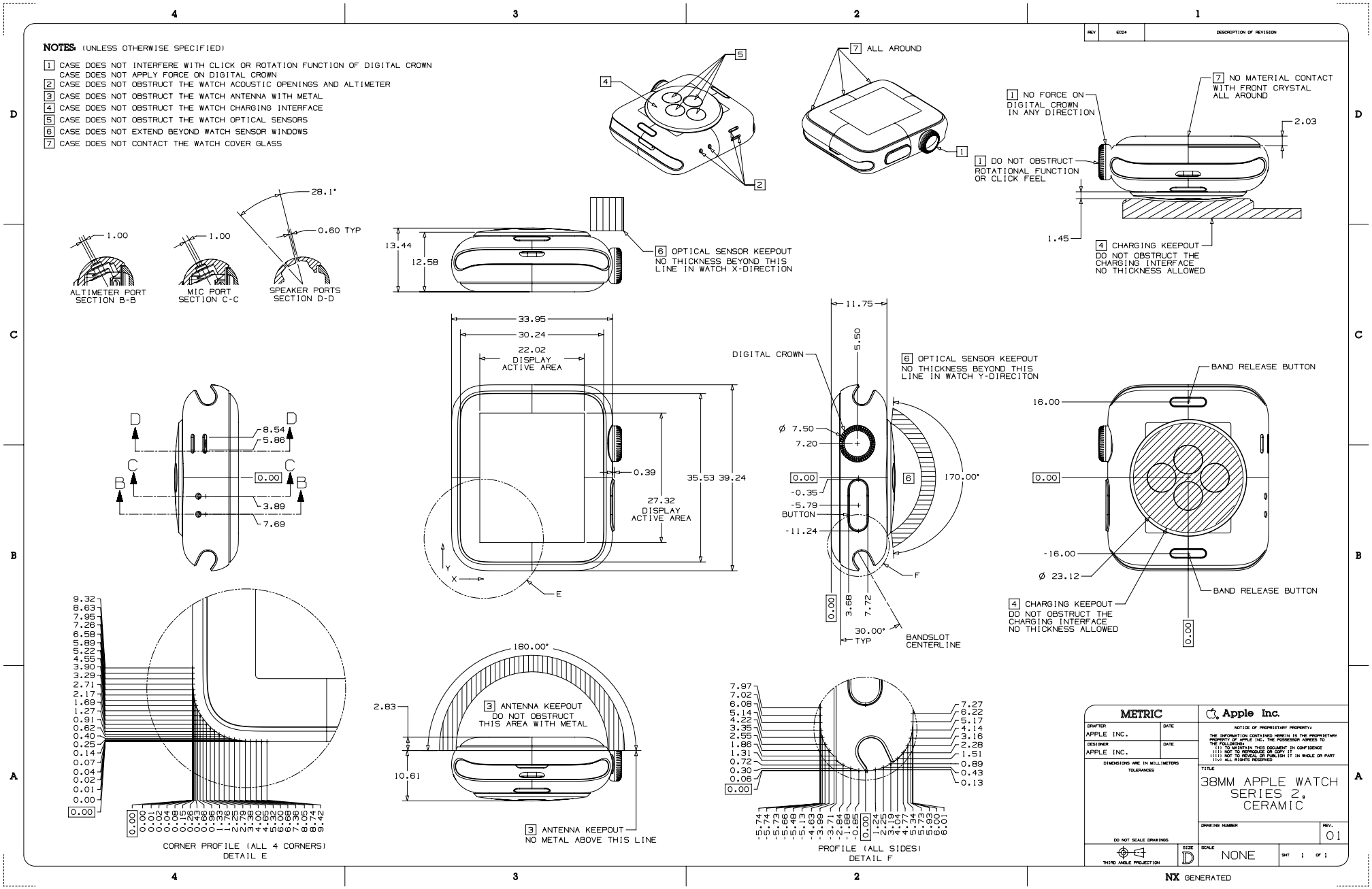

Copyright © 2024 Apple Inc. All Rights Reserved.

58.211 Apple Watch Series 2 Metal, 42 mm

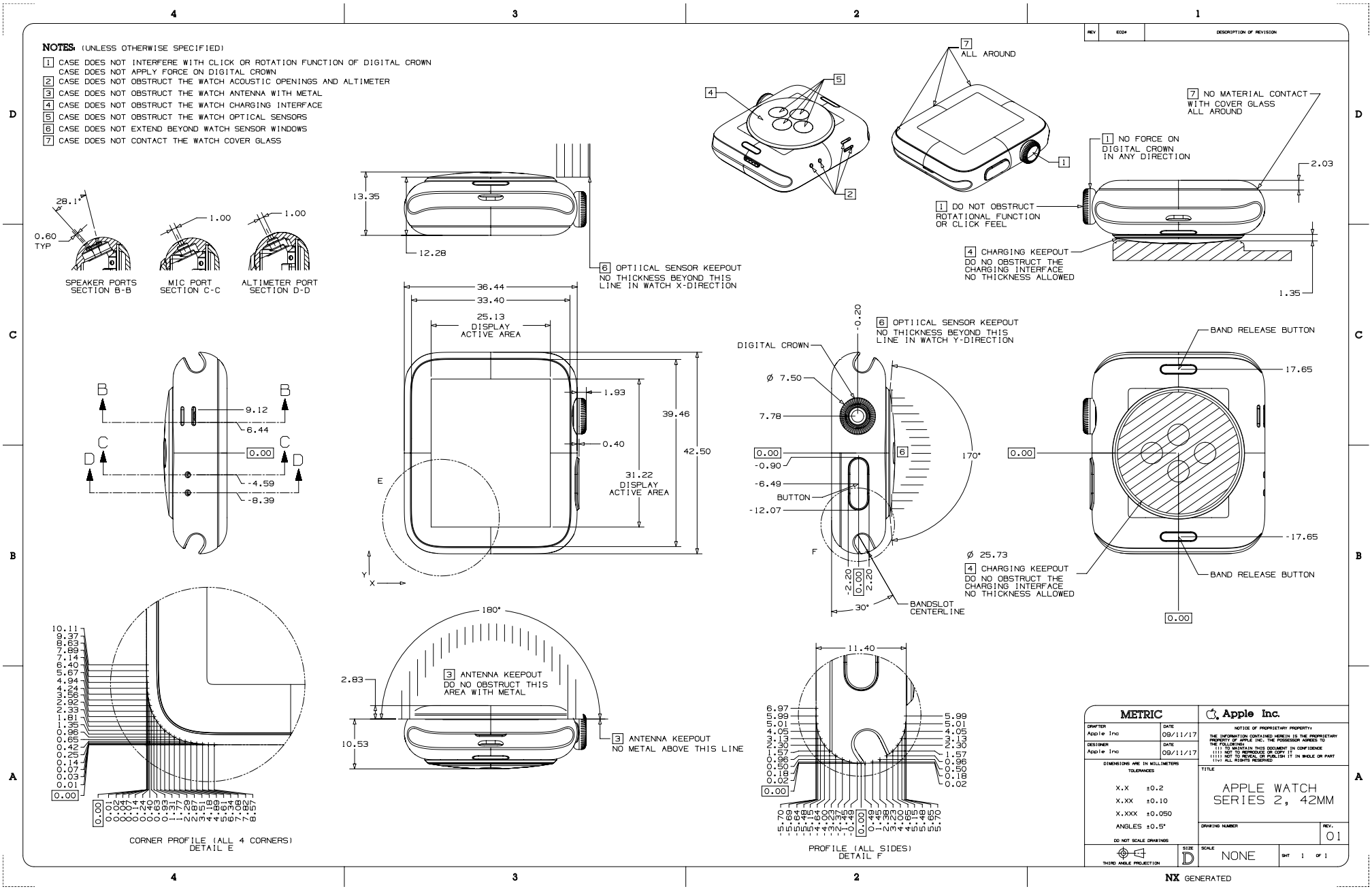

58.212 Apple Watch Series 2 Metal, 38 mm

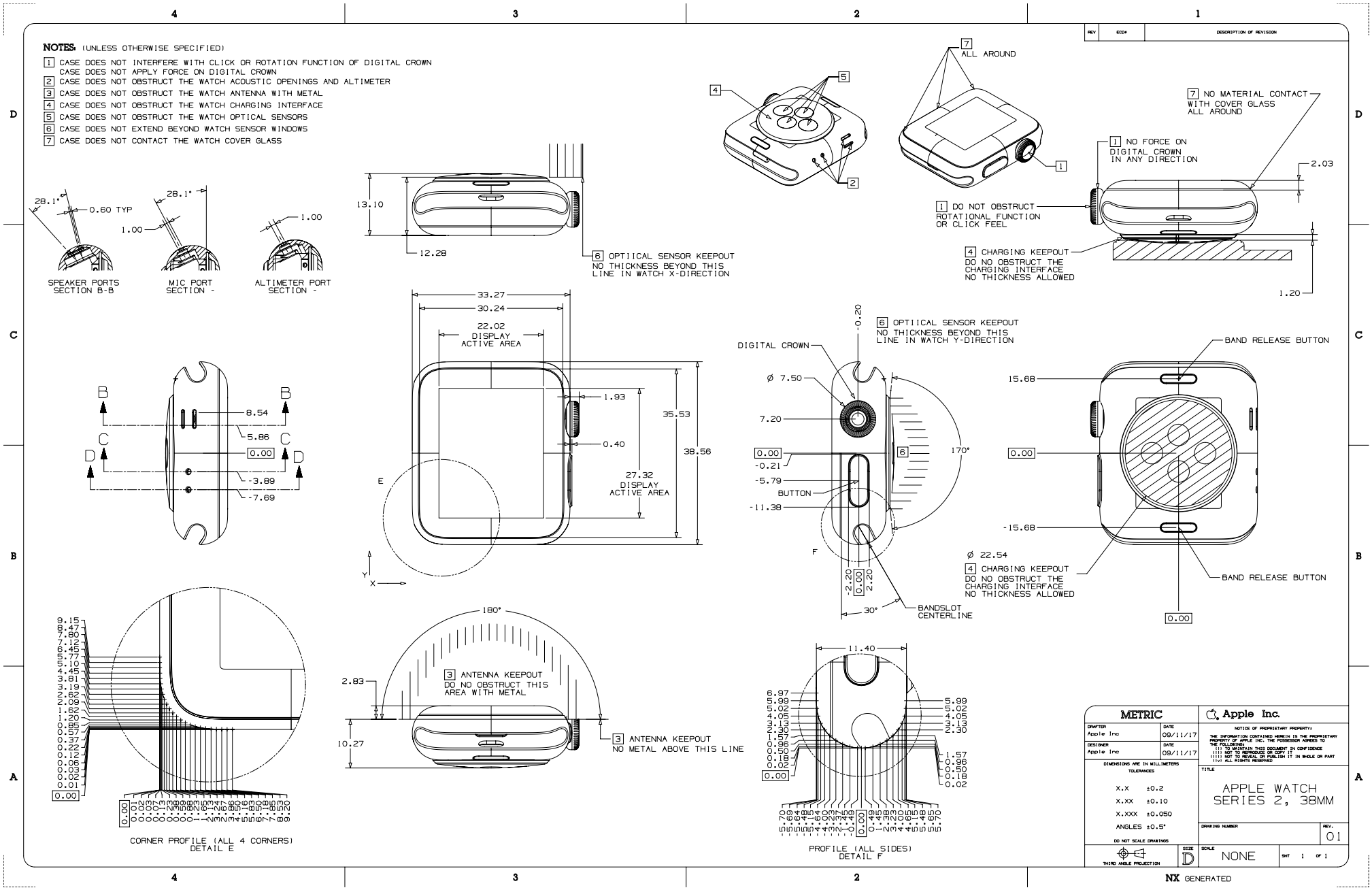

58.213 Apple Watch (1st generation) and Apple Watch Series 1, 42 mm

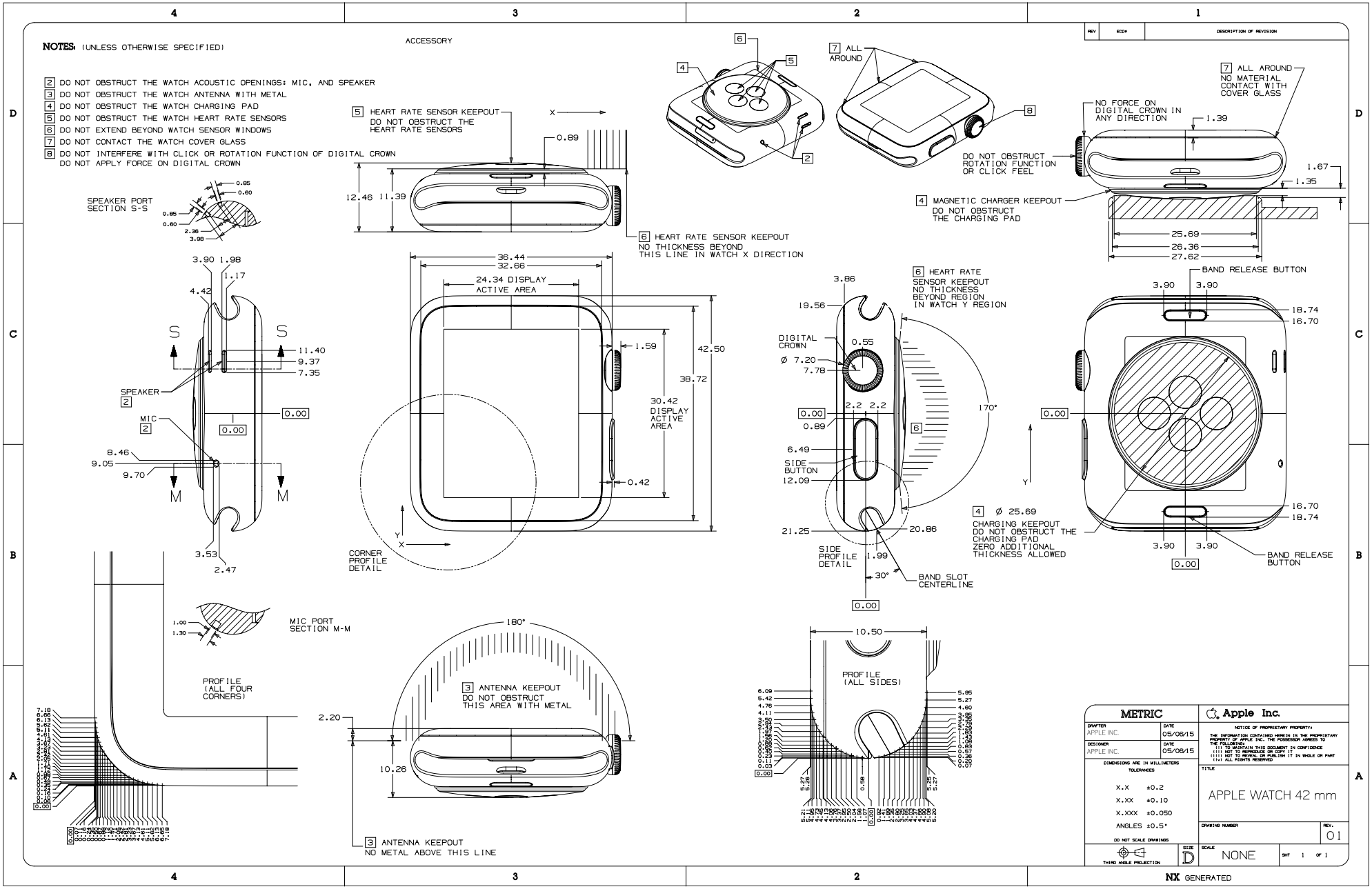

Copyright © 2024 Apple Inc. All Rights Reserved.

58.214 Apple Watch (1st generation) and Apple Watch Series 1, 38 mm

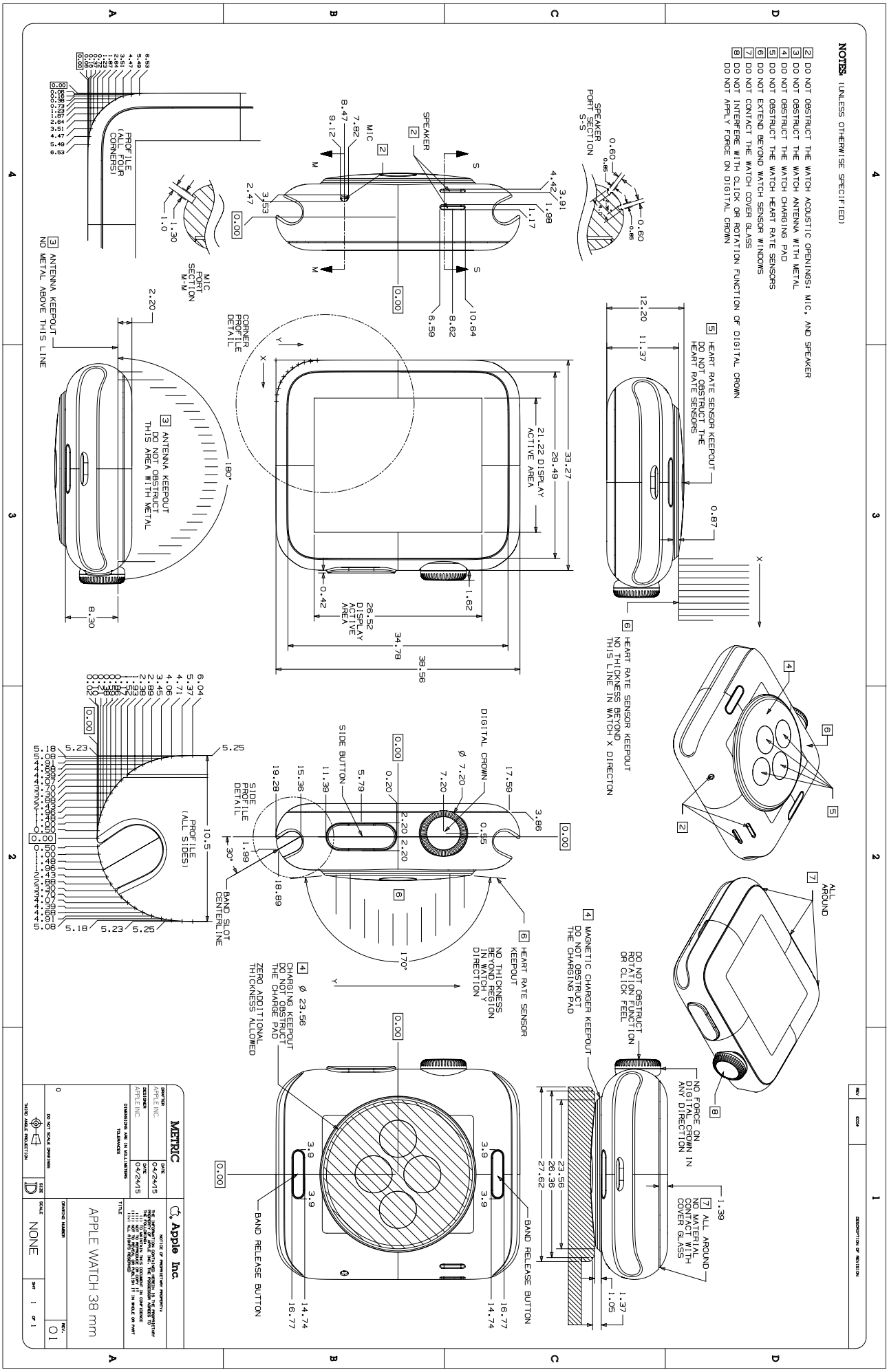

58.215 Apple Vision Pro 1 of 6

REV	ECO#	DESCRIPTION OF REVISION

NOTES: (UNLESS OTHERWISE SPECIFIED)

1. NO METAL CONTACT WITH PRODUCT.
2. UNIT SHALL NOT BE POWERED ON OR UNDER OPERATING CONDITIONS WHILE STORED INSIDE THE CASE.
3. CASE DOES NOT INTERFERE WITH CLICK OR ROTATION FUNCTION OF BUTTON, DIGITAL CROWN, OR FIT DIAL. CASE DOES NOT APPLY FORCE ON BUTTON, DIGITAL CROWN, OR FIT DIAL.
4. 2N MAX ALLOWABLE FORCE APPLIED TO OUTER TEXTILE/FACETRACK PERIMETER.
5. RELATIVE MAGNETIC PERMEABILITY OF ANY METAL USED ON CASE: 1.05 MAX, PER ASTM A342/A342M-14.
6. MINIMIZE CONTACT WITH GLASS ON DISPLAY, OPTICAL MODULES, AND CLIP-ON LENSES. IF CONTACT IS REQUIRED, USE SOFT NON-ABRASIVE MATERIALS TO AVOID SCRATCHING.
7. DO NOT TOUCH LIGHTPIPE.
8. 4N MAX ALLOWABLE FORCE APPLIED TO CUSHION FROM USER SIDE.

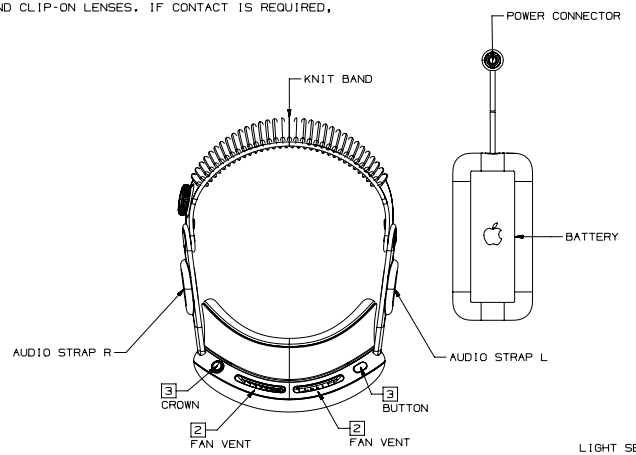

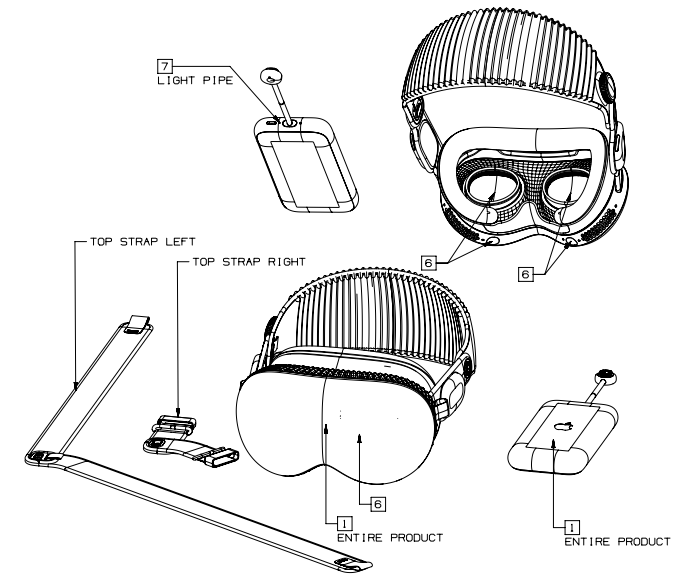

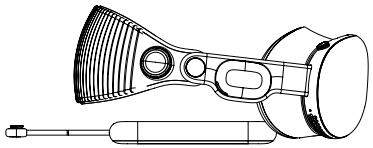

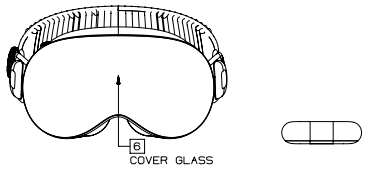

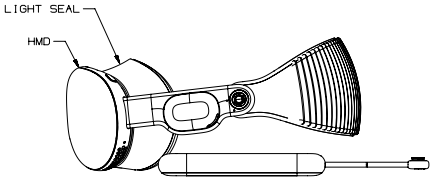

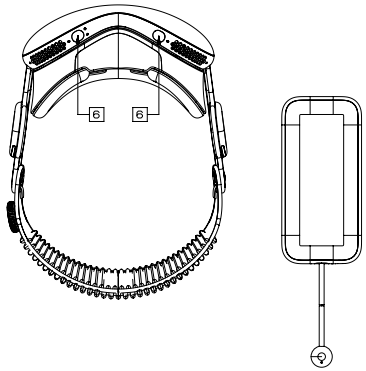

TABLE OF CONTENTS	
SHEET	CONTENT
1	OVERVIEW
2	LIGHTSEAL BOUNDARY
3	LIGHTSEAL CONTACT
4	DUAL LOOP BAND
5	VISION PRO LARGE KNIT BAND
6	VISION PRO SMALL KNIT BAND

METRIC	Apple Inc.
DRAWTER / DATE	NOTICE OF PROPRIETARY PROPERTY: THE INFORMATION CONTAINED HEREIN IS THE PROPRIETARY PROPERTY OF APPLE INC. THE POSSESSOR AGREES TO THE FOLLOWING: (i) TO MAINTAIN THIS DOCUMENT IN CONFIDENCE (ii) NOT TO REPRODUCE OR COPY IT (iii) NOT TO REVEAL OR PUBLISH IT IN WHOLE OR PART (iv) ALL RIGHTS RESERVED
DESIGNER / DATE	
DIMENSIONS ARE IN MILLIMETERS TOLERANCES	TITLE: VISION PRO STORAGE CASE DESIGN GUIDE
DO NOT SCALE DRAWINGS	DRAWING NUMBER / REV.
THIRD ANGLE PROJECTION	SIZE D / SCALE NONE / SHT / OF

NX GENERATED

58.216 Apple Vision Pro 2 of 6

LIGHT SEAL BOUNDARY REQUIREMENTS

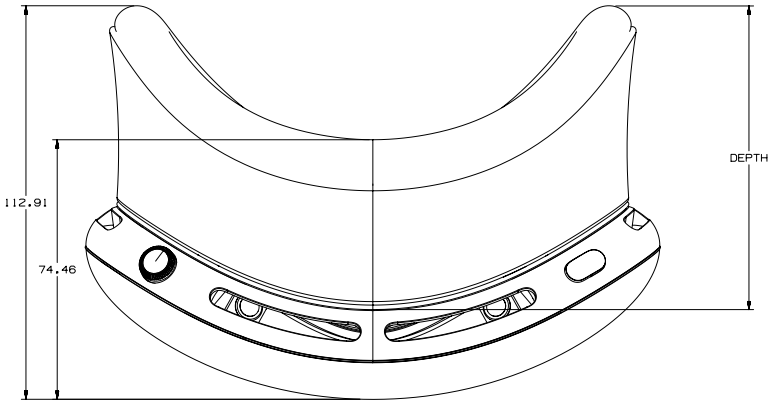

DEEPEST LIGHT SEAL

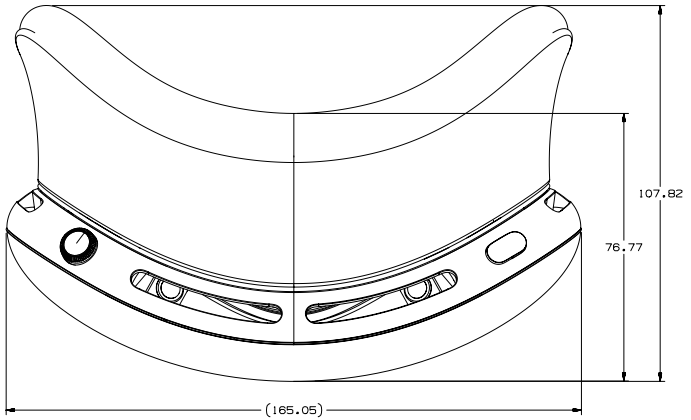

WIDEST • TALLEST LIGHT SEAL

DESCRIPTION	LIGHTSEAL + FACE CUSHION (mm)		
	WIDTH	DEPTH	HEIGHT
LARGEST IN ALL DIMESIONS	161.35 MMC	98.4 MMC	104.26 MMC
SMALLEST IN ALL DIMESIONS	147.57 LMC	72.38 MMC	94.07 LMC

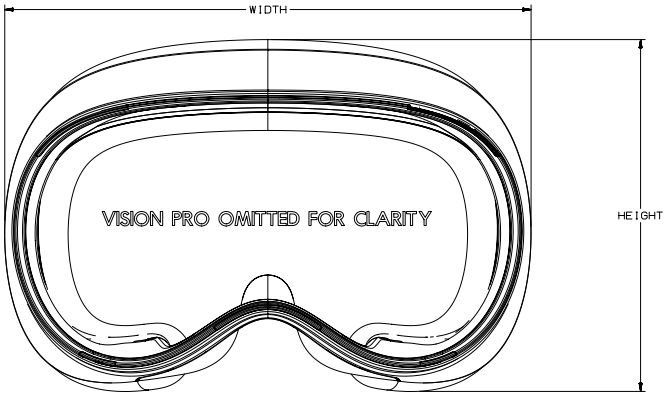

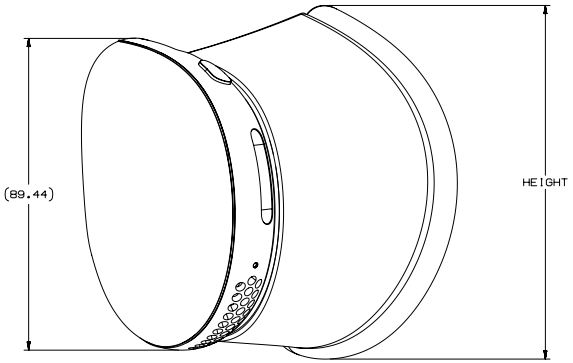

NOTICE OF PROPRIETARY PROPERTY:
THE INFORMATION CONTAINED HEREIN IS THE PROPRIETARY PROPERTY OF APPLE INC. THE POSSESSOR AGREES TO THE FOLLOWING:
(i) TO MAINTAIN THIS DOCUMENT IN CONFIDENCE
(ii) NOT TO REPRODUCE OR COPY IT
(iii) NOT TO REVEAL OR PUBLISH IT IN WHOLE OR PART
(iv) ALL RIGHTS RESERVED

Apple Inc.

SIZE D | DRAWING NUMBER | REV.

SCALE: NONE | SHT | OF

NX GENERATED

58.217 Apple Vision Pro 3 of 6

LIGHT SEAL CONTACT REQUIREMENTS
VISION PRO OMITTED FOR CLARITY

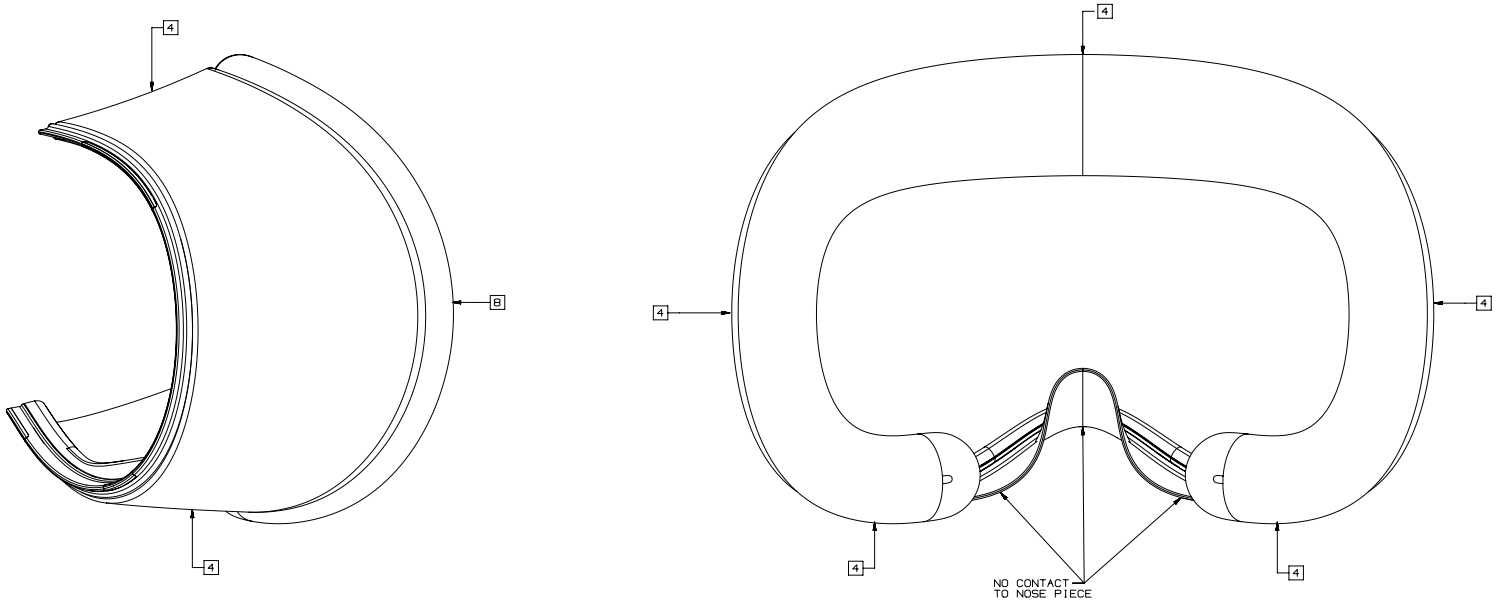

NOTICE OF PROPRIETARY PROPERTY:
THE INFORMATION CONTAINED HEREIN IS THE PROPRIETARY PROPERTY OF APPLE INC. THE POSSESSOR AGREES TO THE FOLLOWING
(i) TO MAINTAIN THIS DOCUMENT IN CONFIDENCE
(ii) NOT TO REPRODUCE OR COPY IT
(iii) NOT TO REVEAL OR PUBLISH IT IN WHOLE OR PART
(iv) ALL RIGHTS RESERVED

Apple Inc.
SIZE D | DRAWING NUMBER | REV.
SCALE: NONE | SHT | OF

NX GENERATED

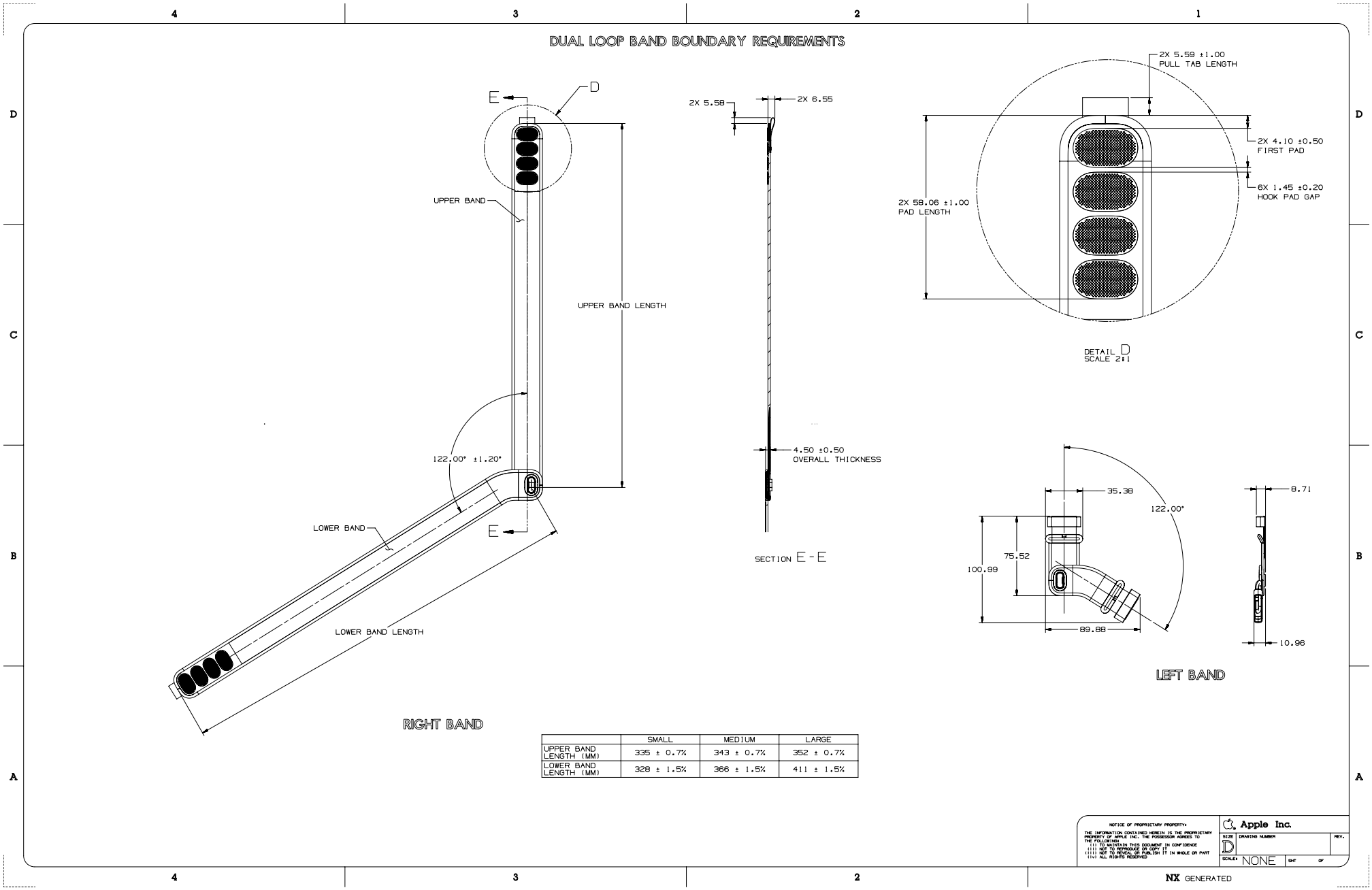

	SMALL	MEDIUM	LARGE
UPPER BAND LENGTH (MM)	335 ± 0.7%	343 ± 0.7%	352 ± 0.7%
LOWER BAND LENGTH (MM)	328 ± 1.5%	366 ± 1.5%	411 ± 1.5%

Copyright © 2024 Apple Inc. All Rights Reserved.

58.219 Apple Vision Pro 5 of 6

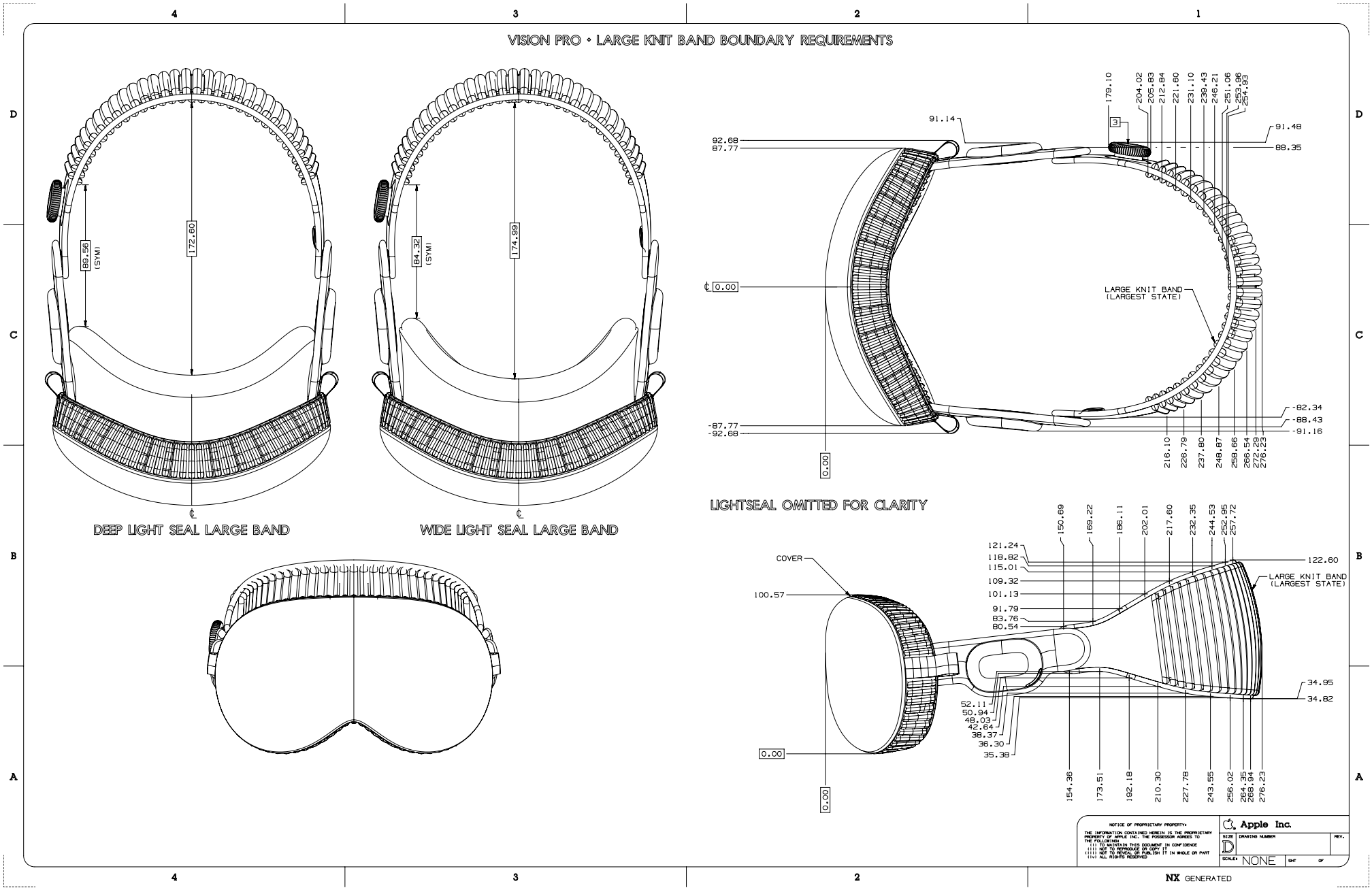

Copyright © 2024 Apple Inc. All Rights Reserved.

58.220 Apple Vision Pro 6 of 6

VISION PRO • SMALL KNIT BAND BOUNDARY REQUIREMENTS

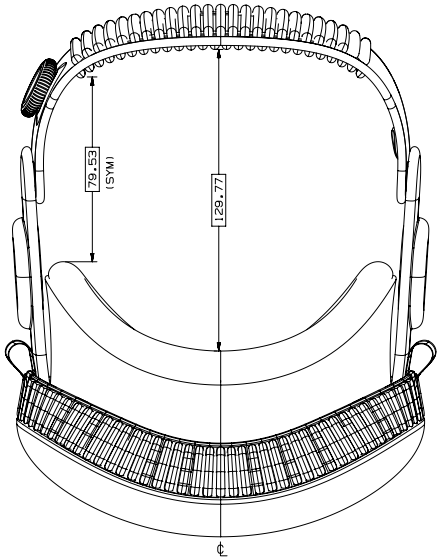

DEEP LIGHT SEAL SMALL BAND

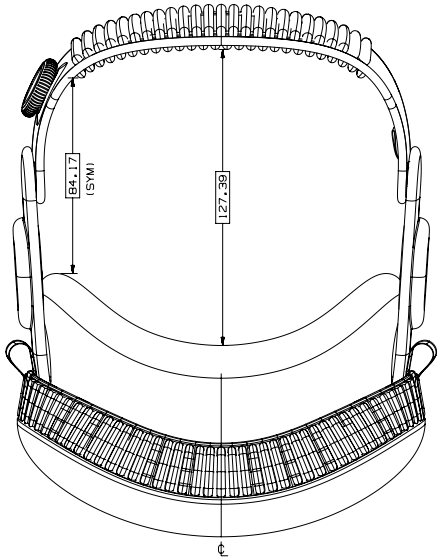

WIDE LIGHT SEAL SMALL BAND

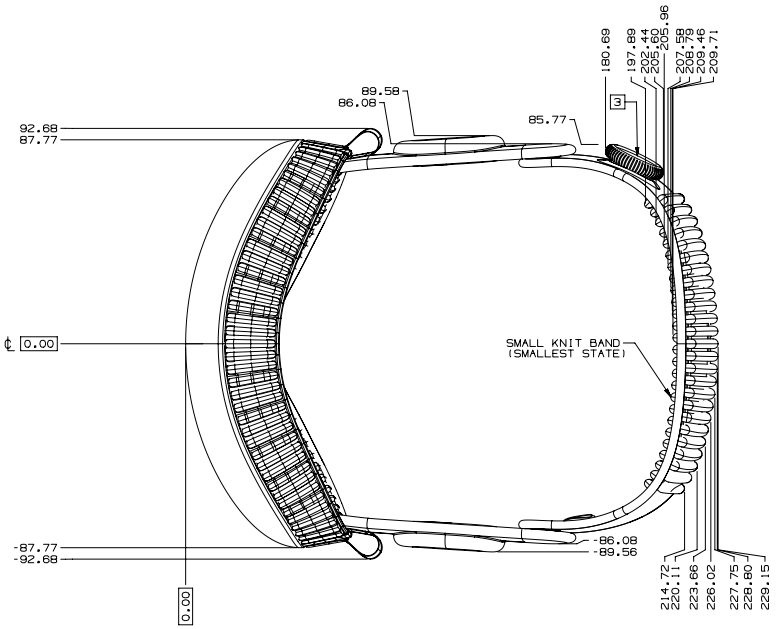

LIGHTSEAL OMITTED FOR CLARITY

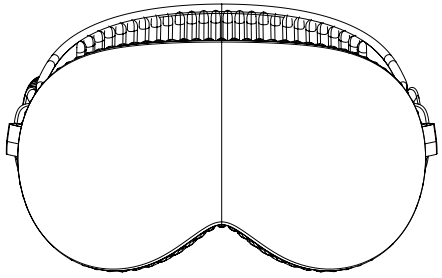

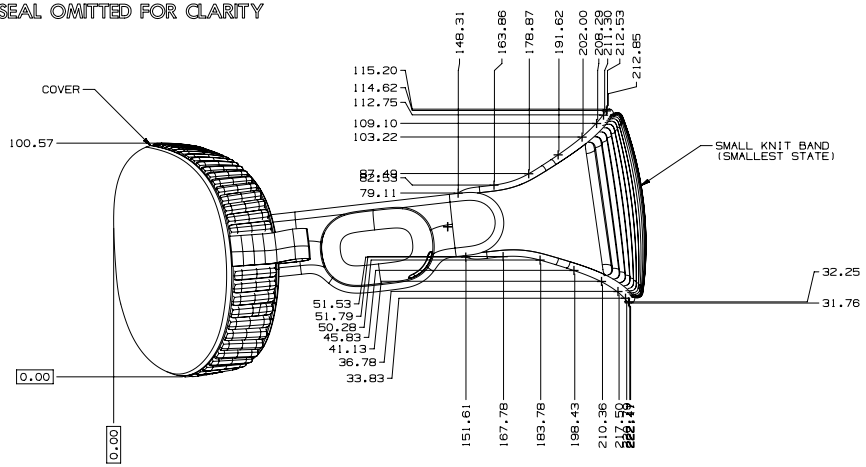

NOTICE OF PROPRIETARY PROPERTY:
THE INFORMATION CONTAINED HEREIN IS THE PROPRIETARY PROPERTY OF APPLE INC. THE POSSESSOR AGREES TO THE FOLLOWING:
(i) TO MAINTAIN THIS DOCUMENT IN CONFIDENCE
(ii) NOT TO REPRODUCE OR COPY IT
(iii) NOT TO REVEAL OR PUBLISH IT IN WHOLE OR PART
(iv) ALL RIGHTS RESERVED

Apple Inc.
SIZE D | DRAWING NUMBER | REV.
SCALE: NONE | SHT | OF

NX GENERATED

58.221 Apple Vision Pro Battery

NOTES: (UNLESS OTHERWISE SPECIFIED)

1. DO NOT OBSTRUCT PORT.
2. DO NOT OBSTRUCT LED.
3. NO METAL CONTACT.
4. BEND RADIUS REQUIREMENT.
5. RECOMMEND TO MAINTAIN AT LEAST 25% SURFACE EXPOSURE FOR HEAT DISSIPATION.

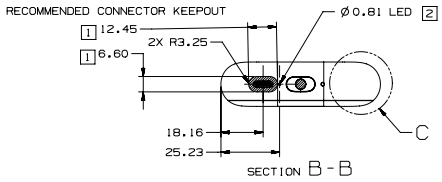

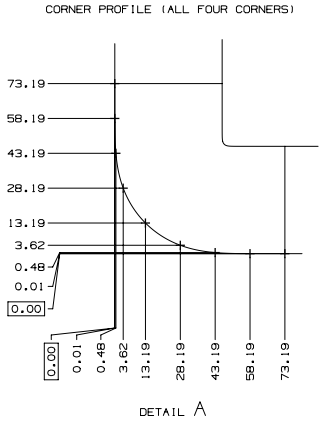

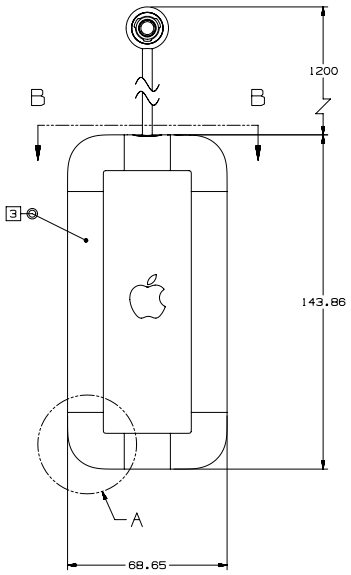

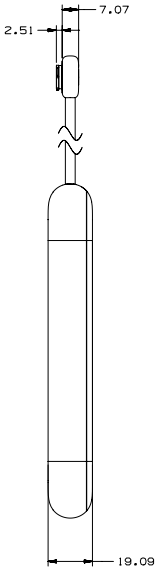

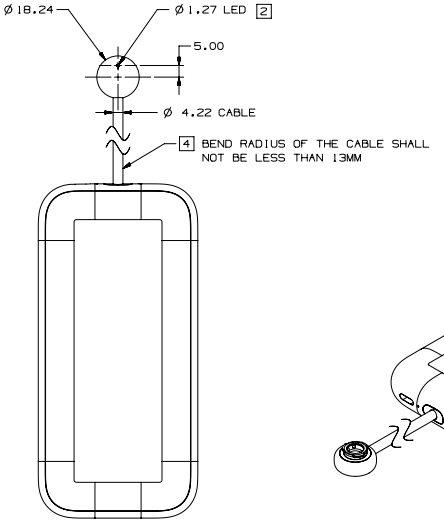

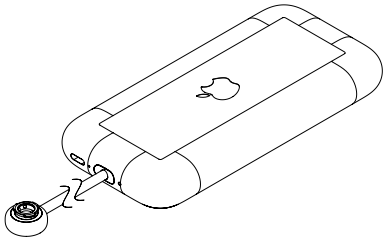

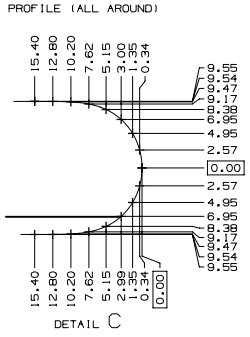

METRIC	Apple Inc.
DRAFTER / DATE	NOTICE OF PROPRIETARY PROPERTY: THE INFORMATION CONTAINED HEREIN IS THE PROPRIETARY PROPERTY OF APPLE INC. THE POSSESSOR AGREES TO THE FOLLOWING: (i) TO MAINTAIN THIS DOCUMENT IN CONFIDENCE (ii) NOT TO REPRODUCE OR COPY IT (iii) NOT TO REVEAL OR PUBLISH IT IN WHOLE OR PART (iv) ALL RIGHTS RESERVED
DESIGNER / DATE	
DIMENSIONS ARE IN MILLIMETERS TOLERANCES	TITLE: VISION PRO BATTERY
DO NOT SCALE DRAWINGS	DRAWING NUMBER / REV.
THIRD ANGLE PROJECTION	SIZE D / SCALE NONE / SHT 1 OF 1

NX GENERATED

Copyright © 2024 Apple Inc. All Rights Reserved.

58.222 Apple Vision Pro Audio Strap

NOTES: (UNLESS OTHERWISE SPECIFIED)

1. DIMENSIONS REFER TO LEFT AUDIO STRAP. RIGHT AUDIO STRAP IS MIRRORED UNLESS OTHERWISE SPECIFIED.
2. DO NOT OBSTRUCT PORTS.
3. NO METAL CONTACT WITH ELASTOMER PORTION OF AUDIO STRAP.
4. MATERIAL CONTACT WITH CONNECTOR AND FACE PLATE MAX HARDNESS: 320 HV.
5. MAXIMUM NORMAL PULL FORCE ON CONNECTOR: 350 N.

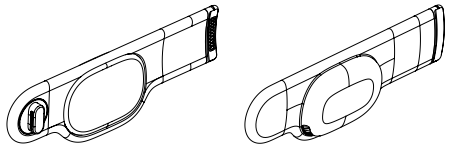

LEFT AUDIO STRAP

RIGHT AUDIO STRAP

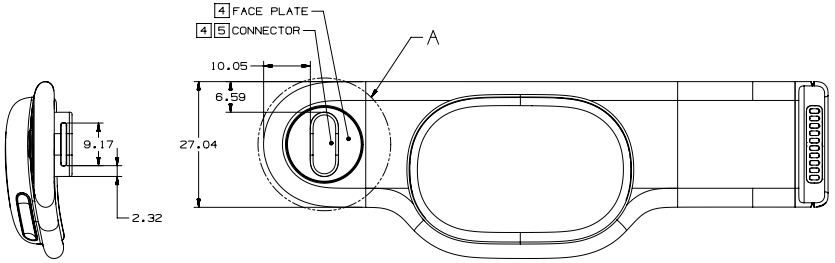

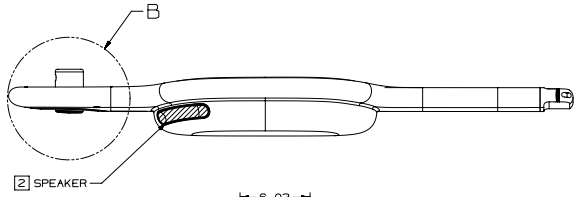

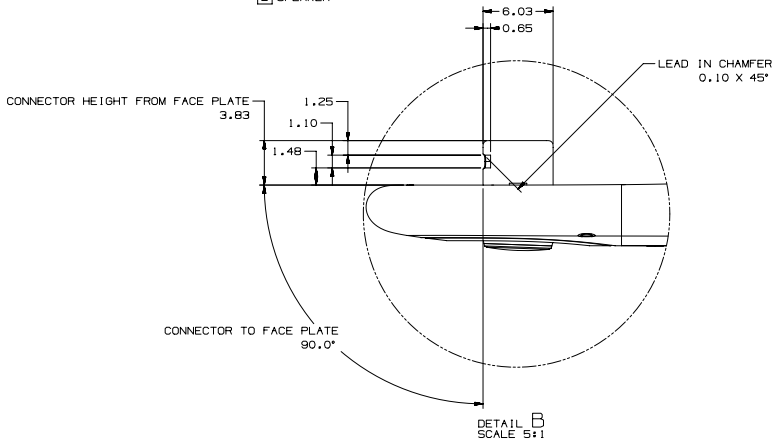

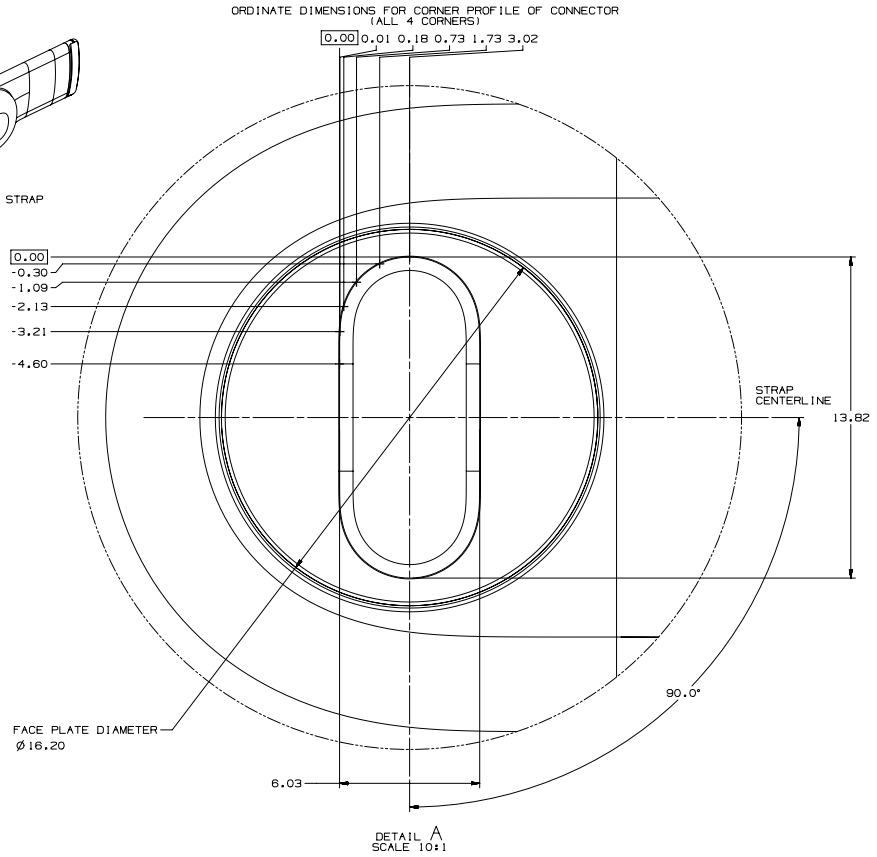

METRIC	Apple Inc.
DRAFTER / DATE	NOTICE OF PROPRIETARY PROPERTY: THE INFORMATION CONTAINED HEREIN IS THE PROPRIETARY PROPERTY OF APPLE INC. THE POSSESSOR AGREES TO THE FOLLOWING: (i) TO MAINTAIN THIS DOCUMENT IN CONFIDENCE (ii) NOT TO REPRODUCE OR COPY IT (iii) NOT TO REVEAL OR PUBLISH IT IN WHOLE OR PART (iv) ALL RIGHTS RESERVED
DESIGNER / DATE	
DIMENSIONS ARE IN MILLIMETERS TOLERANCES	TITLE: AUDIO STRAPS FOR VISION PRO
DO NOT SCALE DRAWING	DRAWING NUMBER / REV.
THIRD ANGLE PROJECTION	SIZE D / SCALE NONE / SHT 1 OF 1

NX GENERATED

Copyright © 2024 Apple Inc. All Rights Reserved.

58.223 ZEISS Optical Inserts 1 of 4

NOTES: (UNLESS OTHERWISE SPECIFIED)

1. DIMENSIONS REFER TO LEFT OPTICAL INSERT WITH RIGHT SIDE OPTICAL INSERT BEING A SYMMETRICAL PART UNLESS OTHERWISE SPECIFIED.
2. NO METAL CONTACT WITH PRODUCT.

[3] MINIMIZE CONTACT WITH LENS.

OVERALL DIMENSIONS AND CALLOUTS

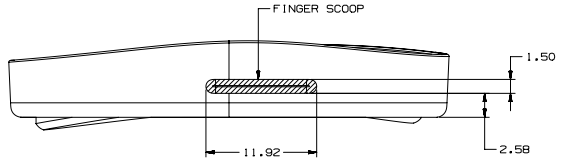

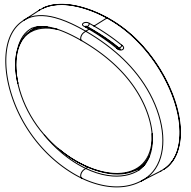

LEFT OPTICAL INSERT

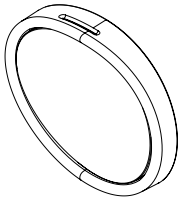

RIGHT OPTICAL INSERT

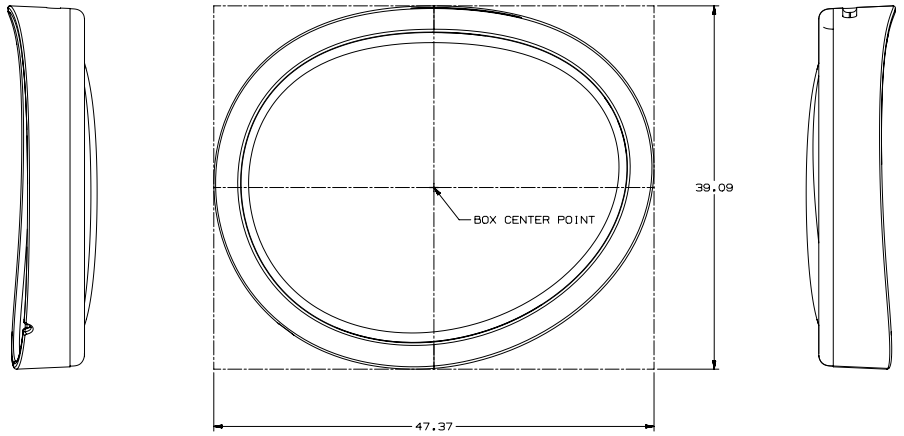

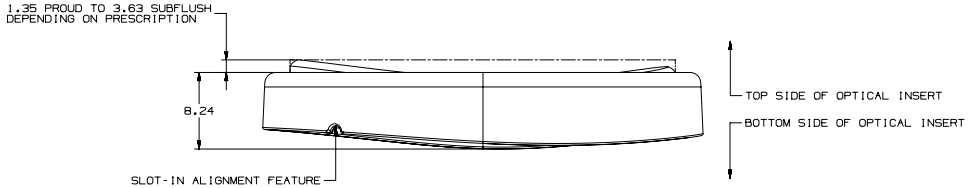

METRIC	Apple Inc.
DRAWTER / DATE	NOTICE OF PROPRIETARY PROPERTY: THE INFORMATION CONTAINED HEREIN IS THE PROPRIETARY PROPERTY OF APPLE INC. THE POSSESSOR AGREES TO THE FOLLOWING: (i) TO MAINTAIN THIS DOCUMENT IN CONFIDENCE (ii) NOT TO REPRODUCE OR COPY IT (iii) NOT TO REVERSE ENGINEER OR PUBLISH IT IN WHOLE OR PART (iv) ALL RIGHTS RESERVED
DESIGNER / DATE	
DIMENSIONS ARE IN MILLIMETERS TOLERANCES	TITLE: OPTICAL INSERTS FOR VISION PRO
DO NOT SCALE DRAWINGS	DRAWING NUMBER / REV.
THIRD ANGLE PROJECTION / SIZE D	SCALE: NONE / SHT 1 OF 4

NX GENERATED

58.224 ZEISS Optical Inserts 2 of 4

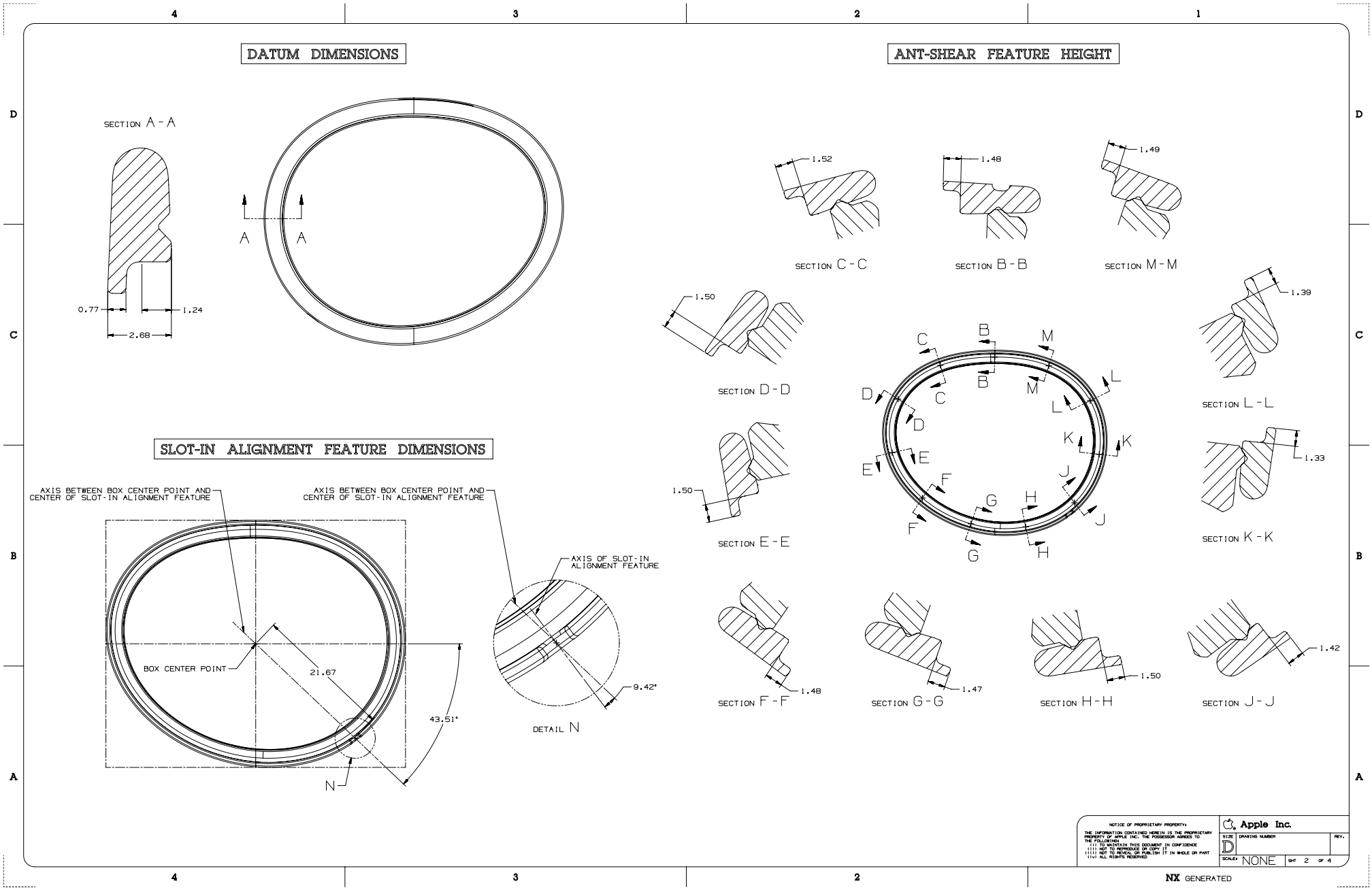

Copyright © 2024 Apple Inc. All Rights Reserved.

58.225 ZEISS Optical Inserts 3 of 4

FRAME PROFILE

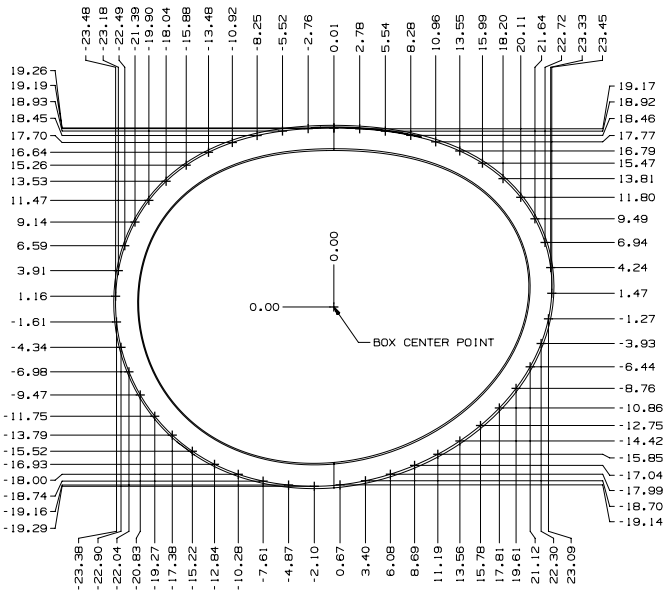

LENS DIMENSIONS

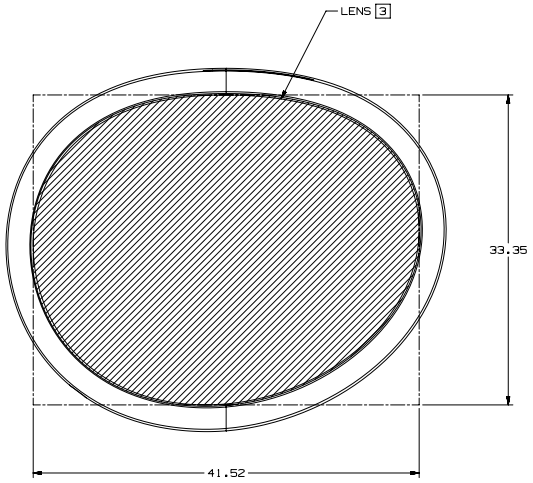

NOTICE OF PROPRIETARY PROPERTY:
THE INFORMATION CONTAINED HEREIN IS THE PROPRIETARY PROPERTY OF APPLE INC. THE POSSESSOR AGREES TO THE FOLLOWING:
(i) TO MAINTAIN THIS DOCUMENT IN CONFIDENCE
(ii) NOT TO REPRODUCE OR COPY IT
(iii) NOT TO REVEAL OR PUBLISH IT IN WHOLE OR PART
(iv) ALL RIGHTS RESERVED

Apple Inc.
SIZE D | DRAWING NUMBER | REV.
SCALE: NONE | SHT 3 OF 4

NX GENERATED

58.226 ZEISS Optical Inserts 4 of 4

LEFT MAGNET ARRAY

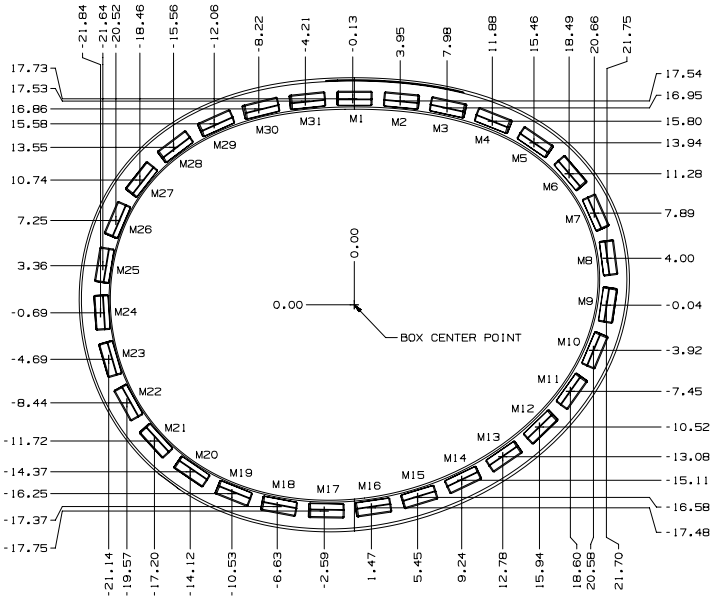

RIGHT MAGNET ARRAY

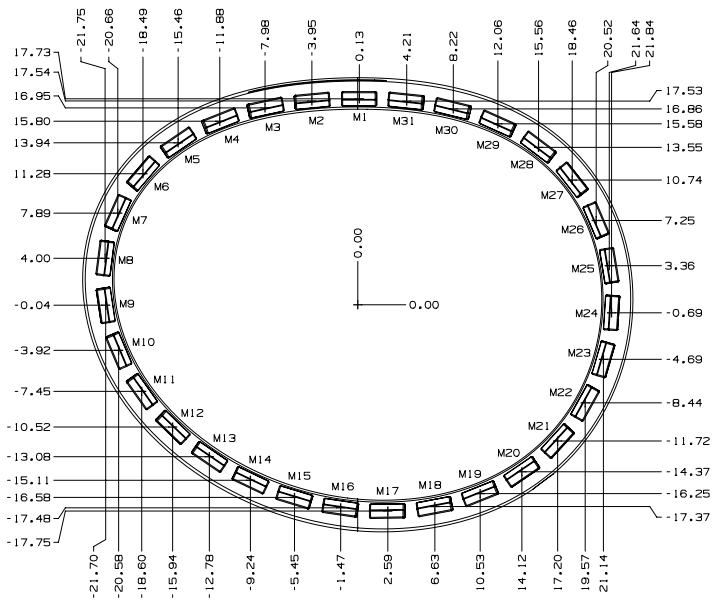

MAGNET POLARITY FOR EACH MAGNET		
MAGNET	POLARITY TOWARD TOP SIDE	POLARITY TOWARD BOTTOM SIDE
M1	N	S
M2		
M3		
M4		
M5		
M6		
M7		
M8	S	N
M9		
M10		
M11		
M12		
M13		
M14		
M15		
M16		
M17		
M18	N	S
M19		
M20		
M21		
M22	S	N
M23		
M24		
M25		
M26		
M27		
M28		
M29	N	S
M30		
M31		

MAGNET POLARITY FOR EACH MAGNET		
MAGNET	POLARITY TOWARD TOP SIDE	POLARITY TOWARD BOTTOM SIDE
M1	S	N
M2		
M5		
M8		
M9		
M12		
M15		
M18	N	S
M19		
M22		
M23		
M26		
M29		
M30		
M15		
M16		
M17		
M18	S	N
M19		
M20		
M21		
M22	N	S
M23		
M24		
M25		
M26		
M27		
M28		
M29	S	N
M30		
M31		

NOTICE OF PROPRIETARY PROPERTY:
THE INFORMATION CONTAINED HEREIN IS THE PROPRIETARY PROPERTY OF APPLE INC. THE POSSESSOR AGREES TO THE FOLLOWING
(i) TO MAINTAIN THIS DOCUMENT IN CONFIDENCE
(ii) NOT TO REPRODUCE OR COPY IT
(iii) NOT TO REVEAL OR PUBLISH IT IN WHOLE OR PART
(iv) ALL RIGHTS RESERVED

Apple Inc.

SIZE D | DRAWING NUMBER | REV.

SCALE= NONE | SHT 4 OF 4

NX GENERATED

58.227 MagSafe Charging Case (USB-C) for AirPods Pro (2nd generation) 1 of 3

NOTES: (UNLESS OTHERWISE SPECIFIED)

1. ACCESSORIES INTRUDING INTO SHADED REGIONS WILL NEGATIVELY AFFECT PRODUCT PERFORMANCE.
2. TO ENSURE FULL FUNCTIONALITY, DO NOT OBSTRUCT THIS AREA WITH METAL OR OTHER CONDUCTIVE MATERIAL.
3. TO ENSURE FULL FUNCTIONALITY WITH MINIMAL IMPACT TO QI CHARGING PERFORMANCE, MINIMIZE ANY MATERIAL THICKNESS.
4. TO ENABLE CHARGING VIA APPLE WATCH CHARGER, IT IS RECOMMENDED THERE BE NO MATERIAL BETWEEN BACK OF DEVICE AND WATCH CHARGER.
5. PROTECTIVE CASES OR COVERS MAY DETUNE OR IMPACT RF & WIRELESS CHARGING PERFORMANCE.
   IMPACT IS HIGHLY DEPENDENT ON MATERIAL AND MATERIAL THICKNESS.
   HIGHLY RECOMMEND AVOIDING METAL MATERIAL AND FOLLOWING GUIDELINES IN THIS DOCUMENT TO MINIMIZE IMPACT.

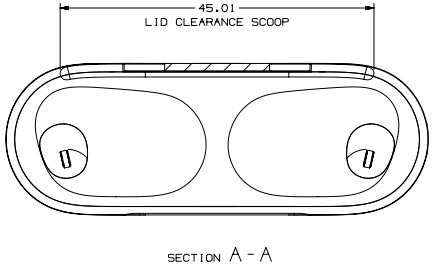

SECTION A - A

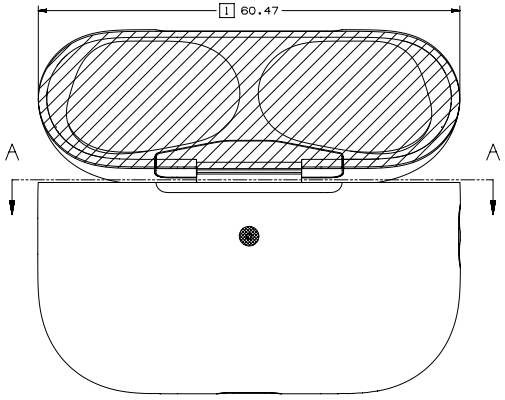

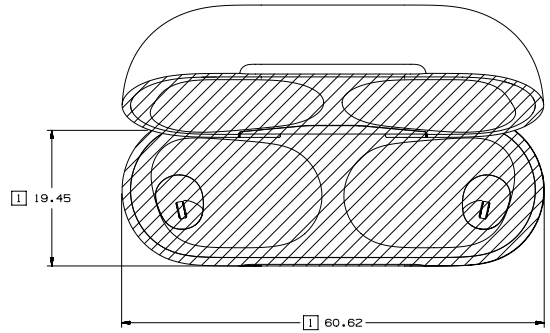

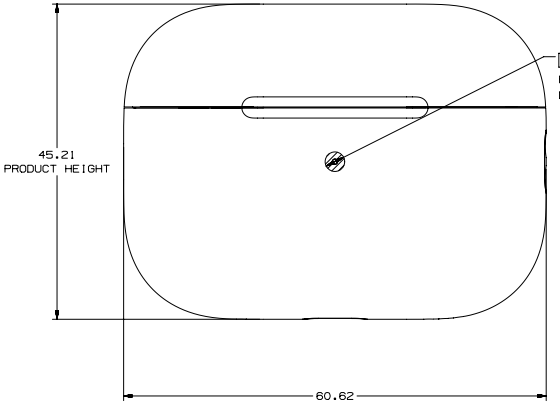

1 LED OUTER DIAMETER = 0.80mm
RECOMMEND Ø2.80
DO NOT OBSTRUCT LED

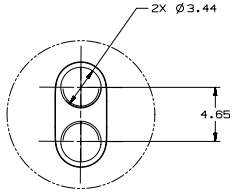

DETAIL B
SCALE 5:1

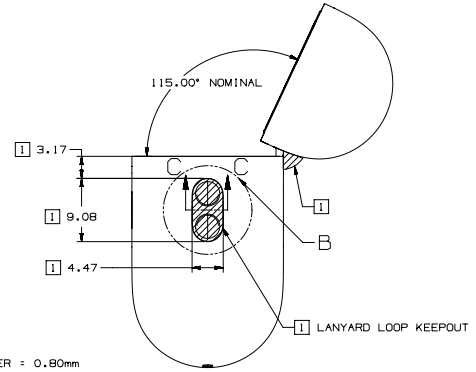

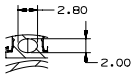

SECTION C - C
INTERNAL DIMENSIONS OF LANYARD LOOP

METRIC	Apple Inc.
DRAWTER / DATE	NOTICE OF PROPRIETARY PROPERTY: THE INFORMATION CONTAINED HEREIN IS THE PROPRIETARY PROPERTY OF APPLE INC. THE POSSESSOR AGREES TO THE FOLLOWING: (i) TO MAINTAIN THIS DOCUMENT IN CONFIDENCE (ii) NOT TO REPRODUCE OR COPY IT (iii) NOT TO REVEAL OR PUBLISH IT IN WHOLE OR PART (iv) ALL RIGHTS RESERVED
DESIGNER / DATE	
DIMENSIONS ARE IN MILLIMETERS TOLERANCES	TITLE: AIRPODS PRO GEN 2 WIRELESS CASE, USB-C
DO NOT SCALE DRAWINGS	DRAWING NUMBER / REV.
THIRD ANGLE PROJECTION / SIZE D / SCALE NONE	SHT 1 OF 3

NX GENERATED

Copyright © 2024 Apple Inc. All Rights Reserved.

58.228 MagSafe Charging Case (USB-C) for AirPods Pro (2nd generation) 2 of 3

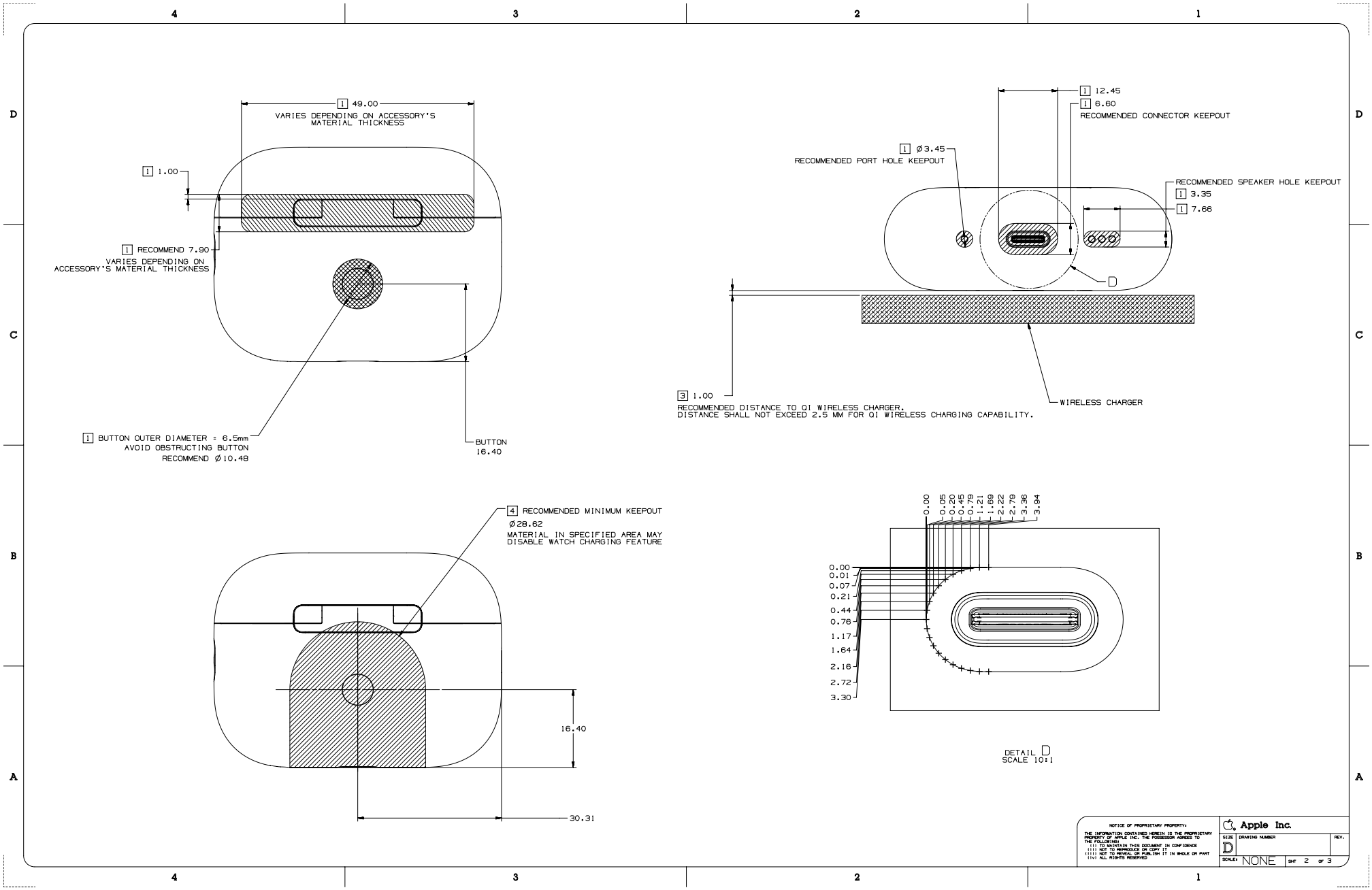

58.229 MagSafe Charging Case (USB-C) for AirPods Pro (2nd generation) 3 of 3

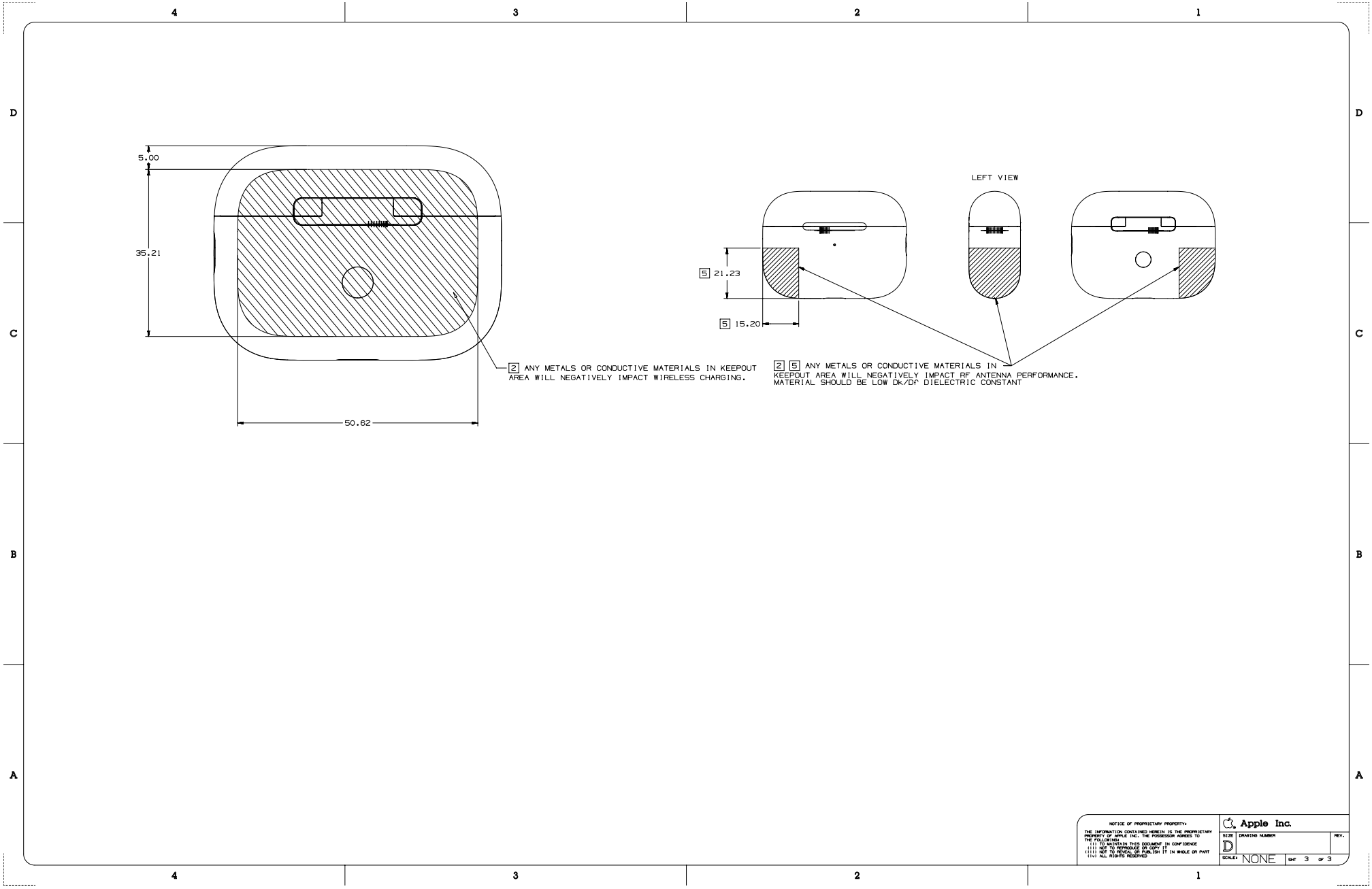

Copyright © 2024 Apple Inc. All Rights Reserved.

58.230 MagSafe Charging Case for AirPods Pro (2nd generation) 1 of 3

NOTES: (UNLESS OTHERWISE SPECIFIED)

1. ACCESSORIES INTRUDING INTO SHADED REGIONS WILL NEGATIVELY AFFECT PRODUCT PERFORMANCE.
2. TO ENSURE FULL FUNCTIONALITY, DO NOT OBSTRUCT THIS AREA WITH METAL OR OTHER CONDUCTIVE MATERIAL.
3. TO ENSURE FULL FUNCTIONALITY WITH MINIMAL IMPACT TO QI CHARGING PERFORMANCE, MINIMIZE ANY MATERIAL THICKNESS.
4. TO ENABLE CHARGING VIA APPLE WATCH CHARGER, IT IS RECOMMENDED THERE BE NO MATERIAL BETWEEN BACK OF DEVICE AND WATCH CHARGER.
5. PROTECTIVE CASES OR COVERS MAY DETUNE OR IMPACT RF & WIRELESS CHARGING PERFORMANCE.
   IMPACT IS HIGHLY DEPENDENT ON MATERIAL AND MATERIAL THICKNESS.
   HIGHLY RECOMMEND AVOIDING METAL MATERIAL AND FOLLOWING GUIDELINES IN THIS DOCUMENT TO MINIMIZE IMPACT.

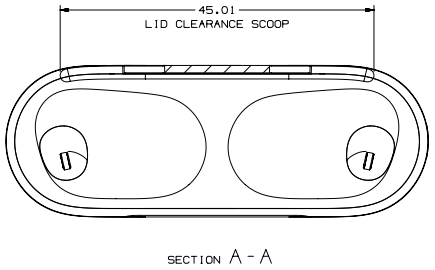

SECTION A - A

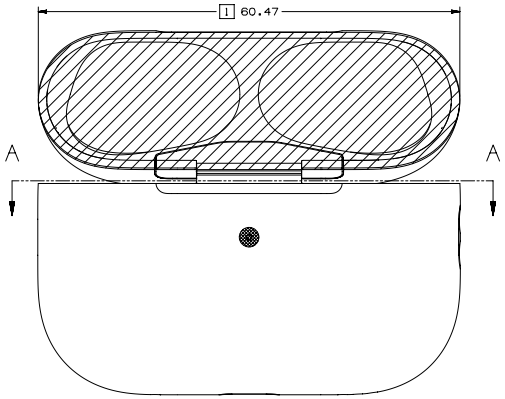

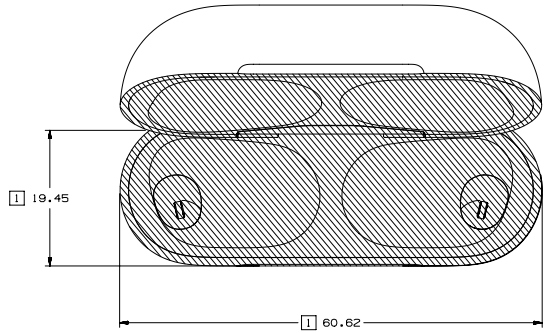

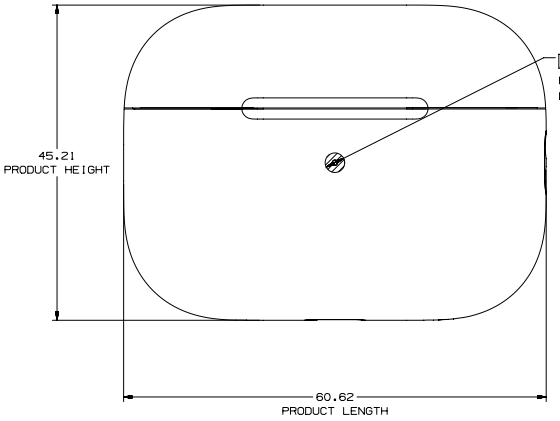

1 LED OUTER DIAMETER = 0.80mm
RECOMMEND Ø2.80
DO NOT OBSTRUCT LED

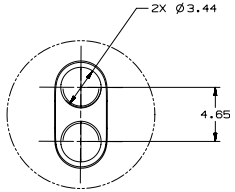

DETAIL B
SCALE 5:1

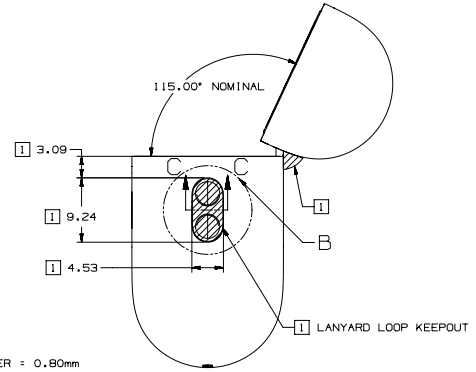

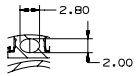

SECTION C - C
INTERNAL DIMENSIONS OF LANYARD LOOP

METRIC	Apple Inc.
DRAWTER / DATE	NOTICE OF PROPRIETARY PROPERTY: THE INFORMATION CONTAINED HEREIN IS THE PROPRIETARY PROPERTY OF APPLE INC. THE POSSESSOR AGREES TO THE FOLLOWING: (i) TO MAINTAIN THIS DOCUMENT IN CONFIDENCE (ii) NOT TO REPRODUCE OR COPY IT (iii) NOT TO REVEAL OR PUBLISH IT IN WHOLE OR PART (iv) ALL RIGHTS RESERVED
DESIGNER / DATE	
DIMENSIONS ARE IN MILLIMETERS TOLERANCES	TITLE: AIRPODS PRO GEN 2 WIRELESS CHARGING CASE
DO NOT SCALE DRAWINGS	DRAWING NUMBER / REV.
THIRD ANGLE PROJECTION / SIZE D	SCALE: NONE / SHT

NX GENERATED

Copyright © 2024 Apple Inc. All Rights Reserved.

58.231 MagSafe Charging Case for AirPods Pro (2nd generation) 2 of 3

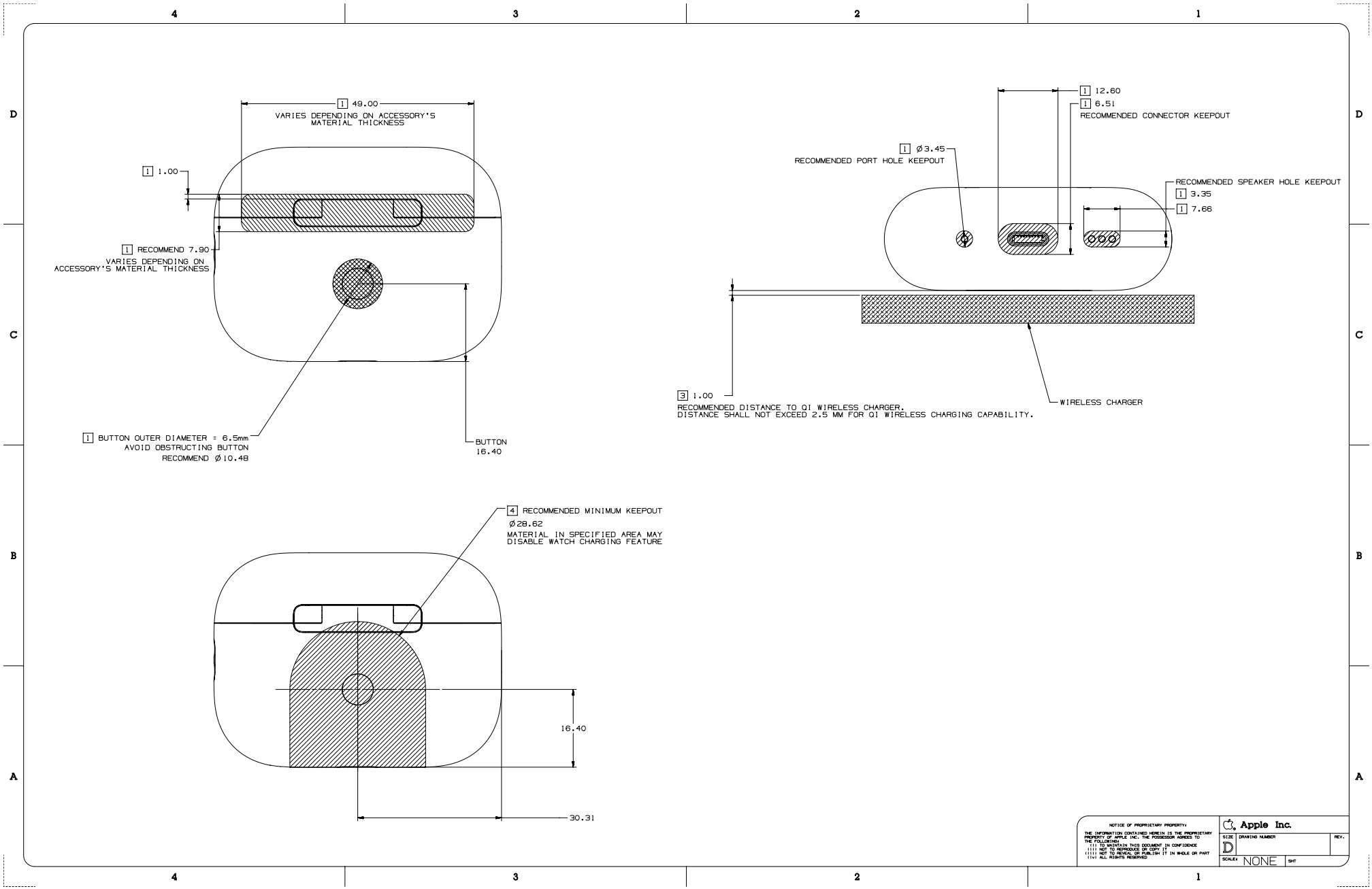

Copyright © 2024 Apple Inc. All Rights Reserved.

58.232 MagSafe Charging Case for AirPods Pro (2nd generation) 3 of 3

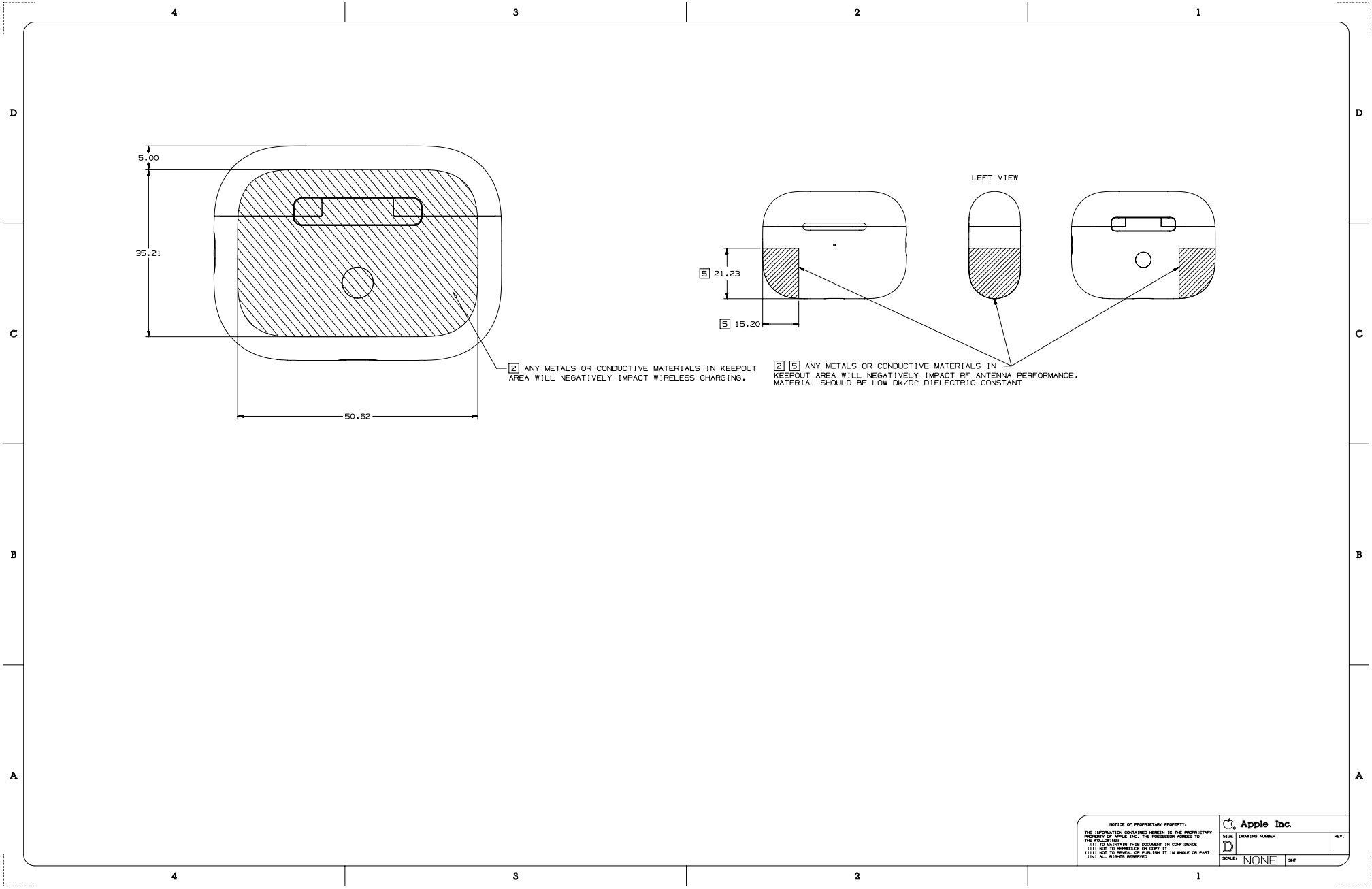

Copyright © 2024 Apple Inc. All Rights Reserved.

58.233 AirPods Pro (2nd generation)

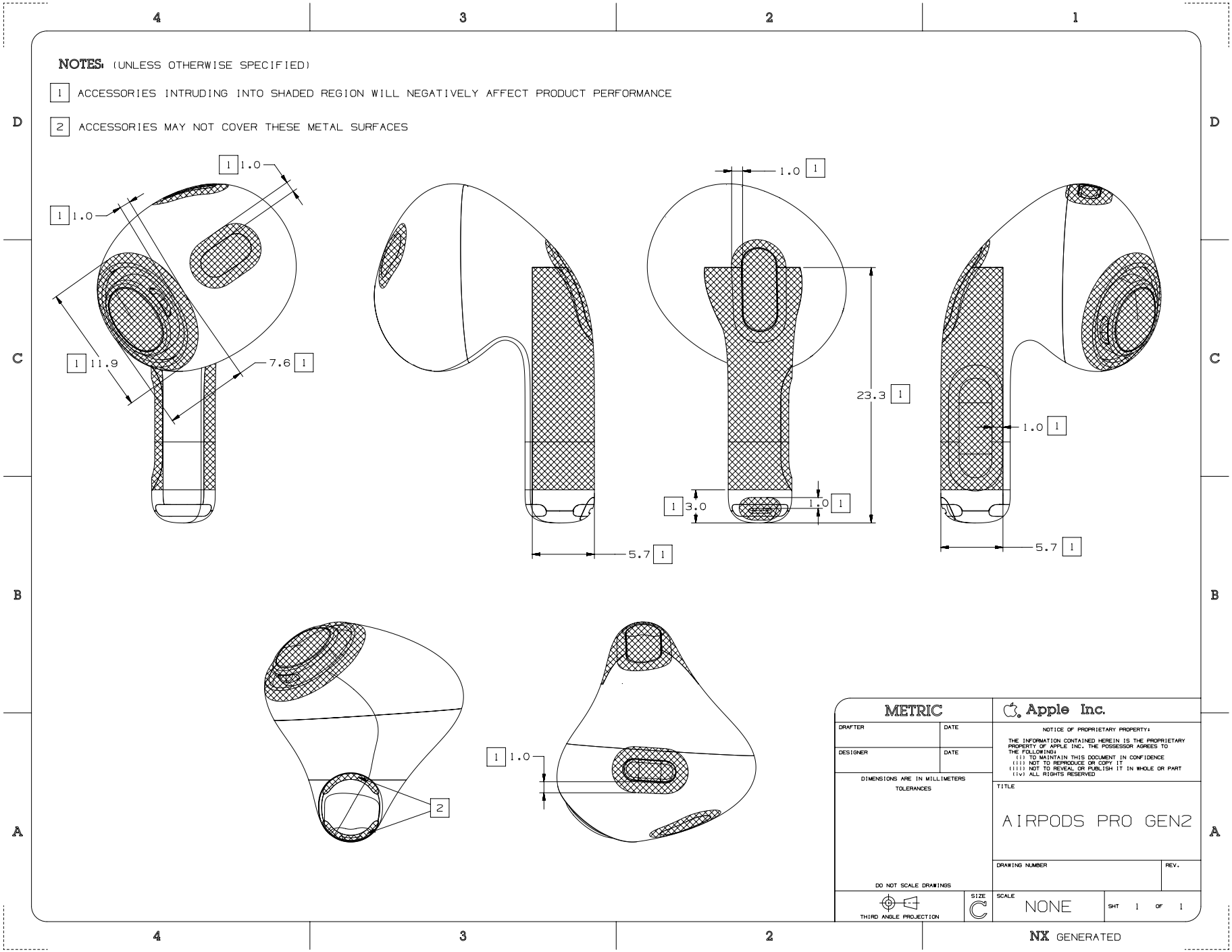

Copyright © 2024 Apple Inc. All Rights Reserved.

58.234 MagSafe Charging Case for AirPods (3rd generation)

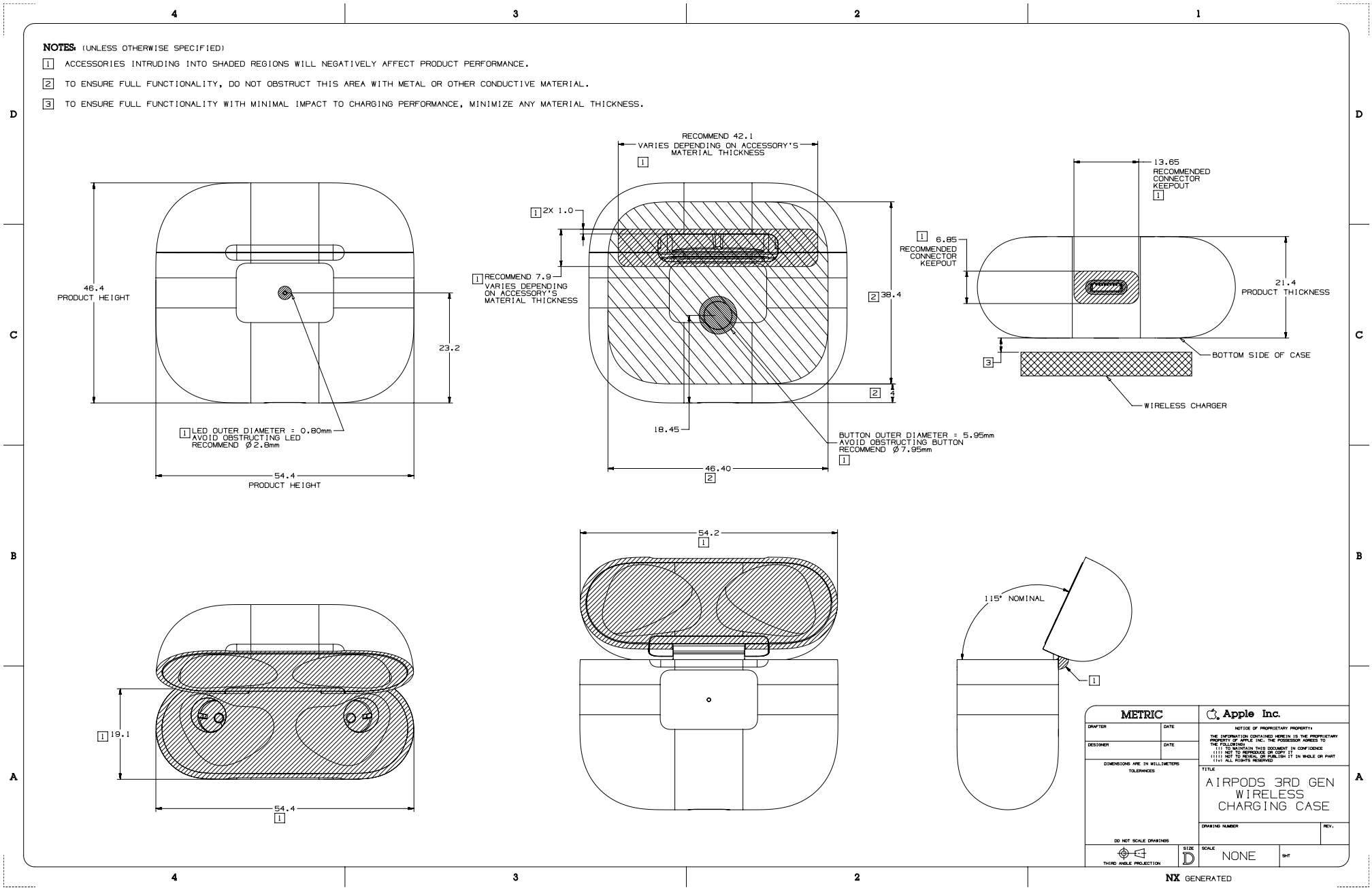

Copyright © 2024 Apple Inc. All Rights Reserved.

58.235 AirPods (3rd generation)

REV	ECO#	DESCRIPTION OF REVISION

NOTES: (UNLESS OTHERWISE SPECIFIED)

1. ACCESSORIES INTRUDING INTO SHADED REGION WILL NEGATIVELY AFFECT PRODUCT PERFORMANCE
2. ACCESSORIES MUST NOT COVER THESE METAL SURFACES

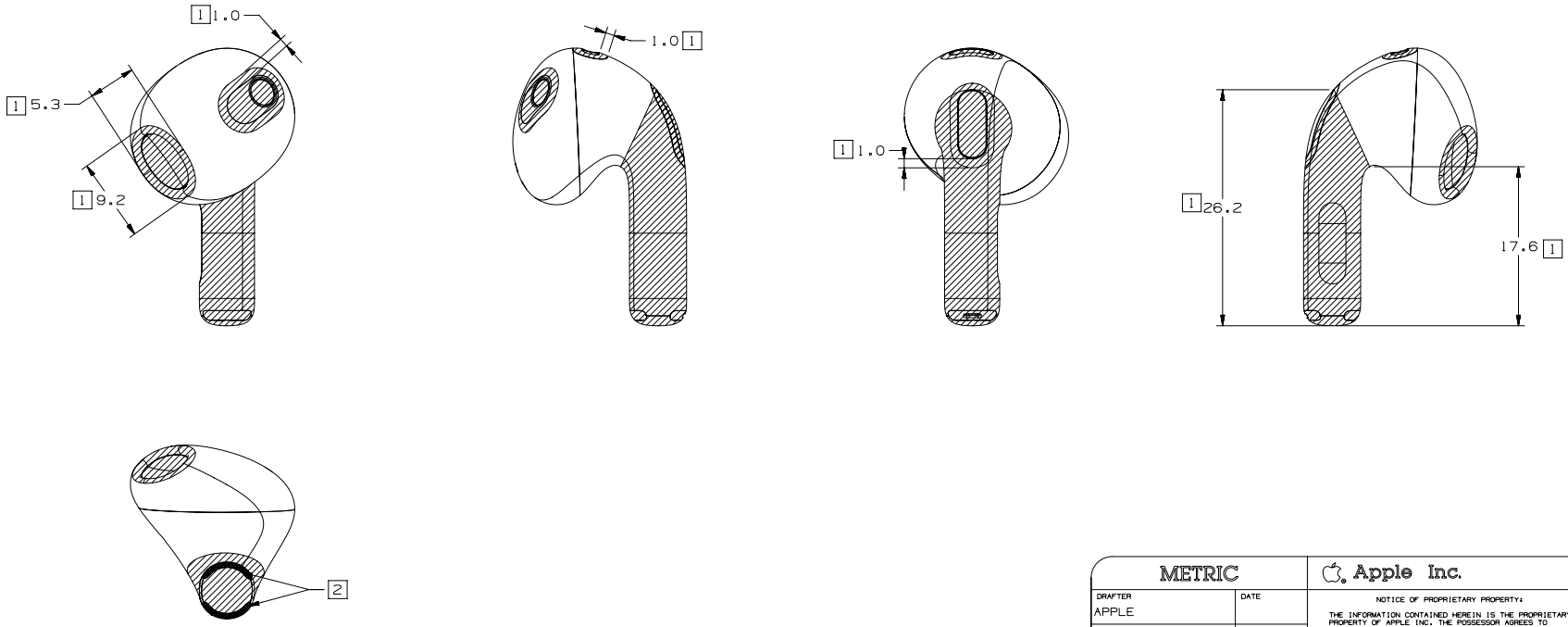

METRIC	Apple Inc.
DRAFTER: APPLE — DATE	NOTICE OF PROPRIETARY PROPERTY: THE INFORMATION CONTAINED HEREIN IS THE PROPRIETARY PROPERTY OF APPLE INC. THE POSSESSOR AGREES TO THE FOLLOWING: (i) TO MAINTAIN THIS DOCUMENT IN CONFIDENCE (ii) NOT TO REPRODUCE OR COPY IT (iii) NOT TO REVEAL OR PUBLISH IT IN WHOLE OR PART (iv) ALL RIGHTS RESERVED
DESIGNER: APPLE — DATE	TITLE: AirPods (3rd generation)
DIMENSIONS ARE IN MILLIMETERS TOLERANCES X.X ±0.2 X.XX ±0.10 X.XXX ±0.050 ANGLES ±0.5° DO NOT SCALE DRAWINGS	DRAWING NUMBER — REV. 01
THIRD ANGLE PROJECTION — SIZE C	SCALE: NONE — SHT 1 OF 1
NX GENERATED	

Copyright © 2024 Apple Inc. All Rights Reserved.

58.236 Wireless Charging Case for AirPods Pro (1st generation)

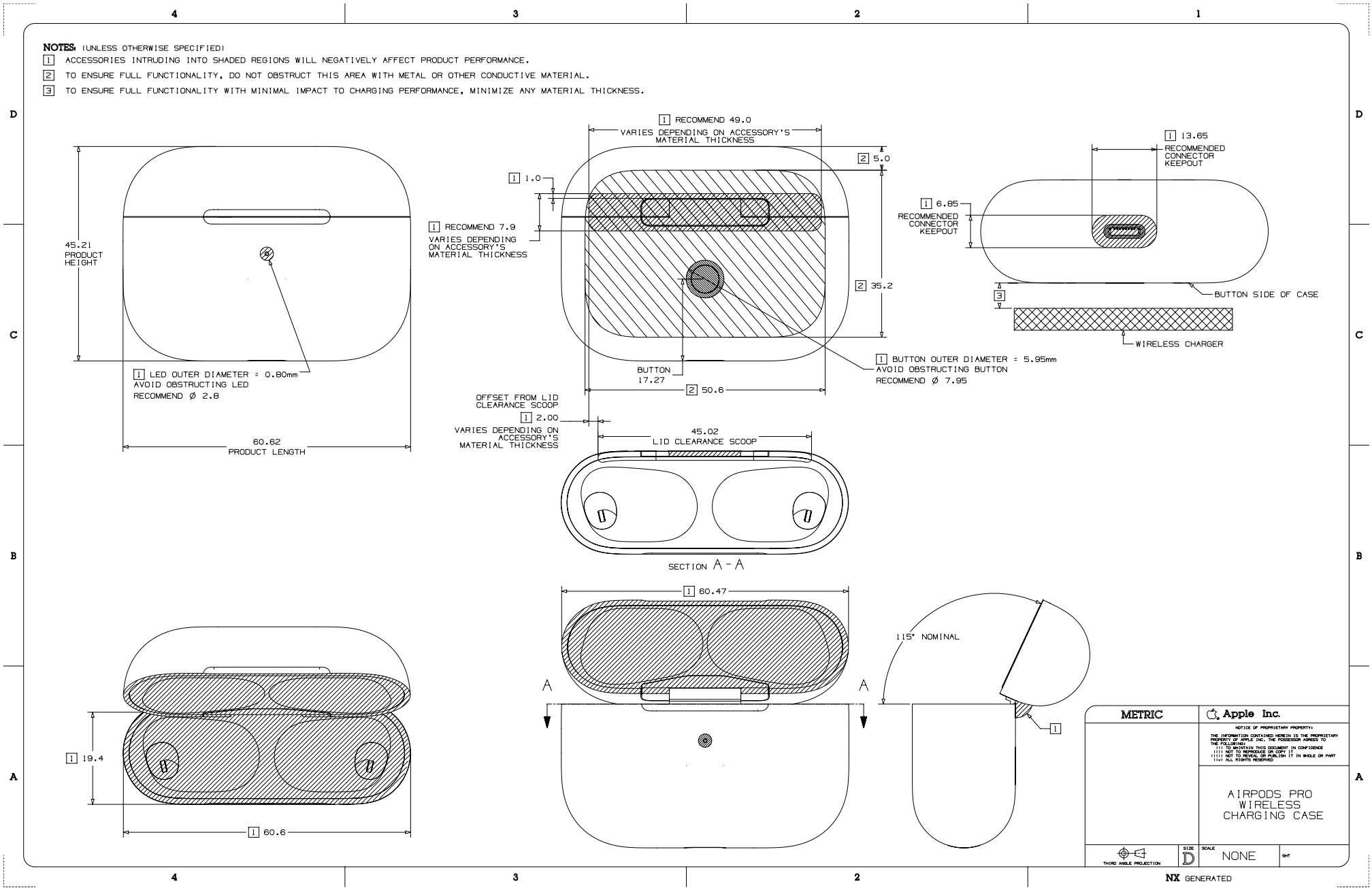

Copyright © 2024 Apple Inc. All Rights Reserved.

58.237 AirPods Pro (1st generation)

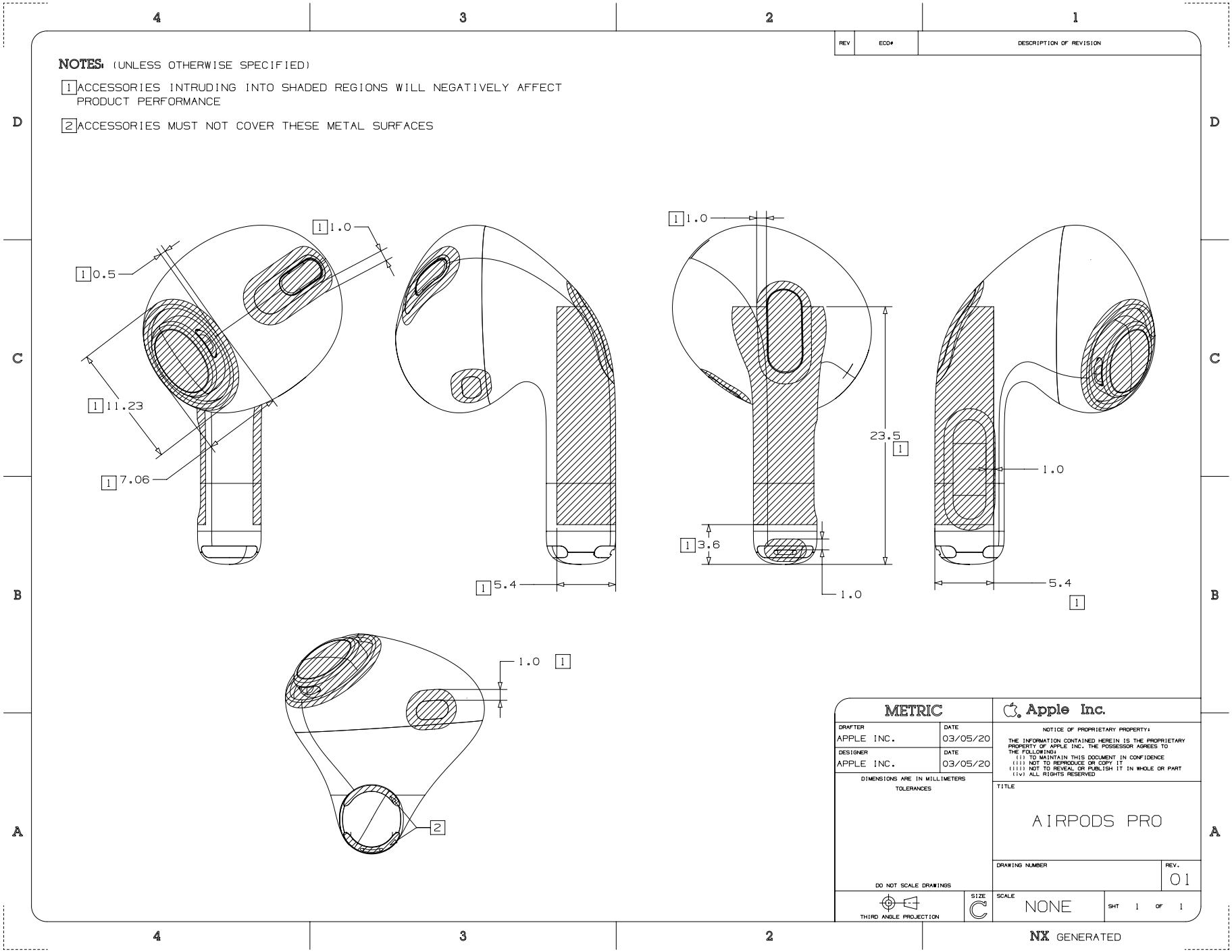

Copyright © 2024 Apple Inc. All Rights Reserved.

58.238 Wireless Charging Case for AirPods

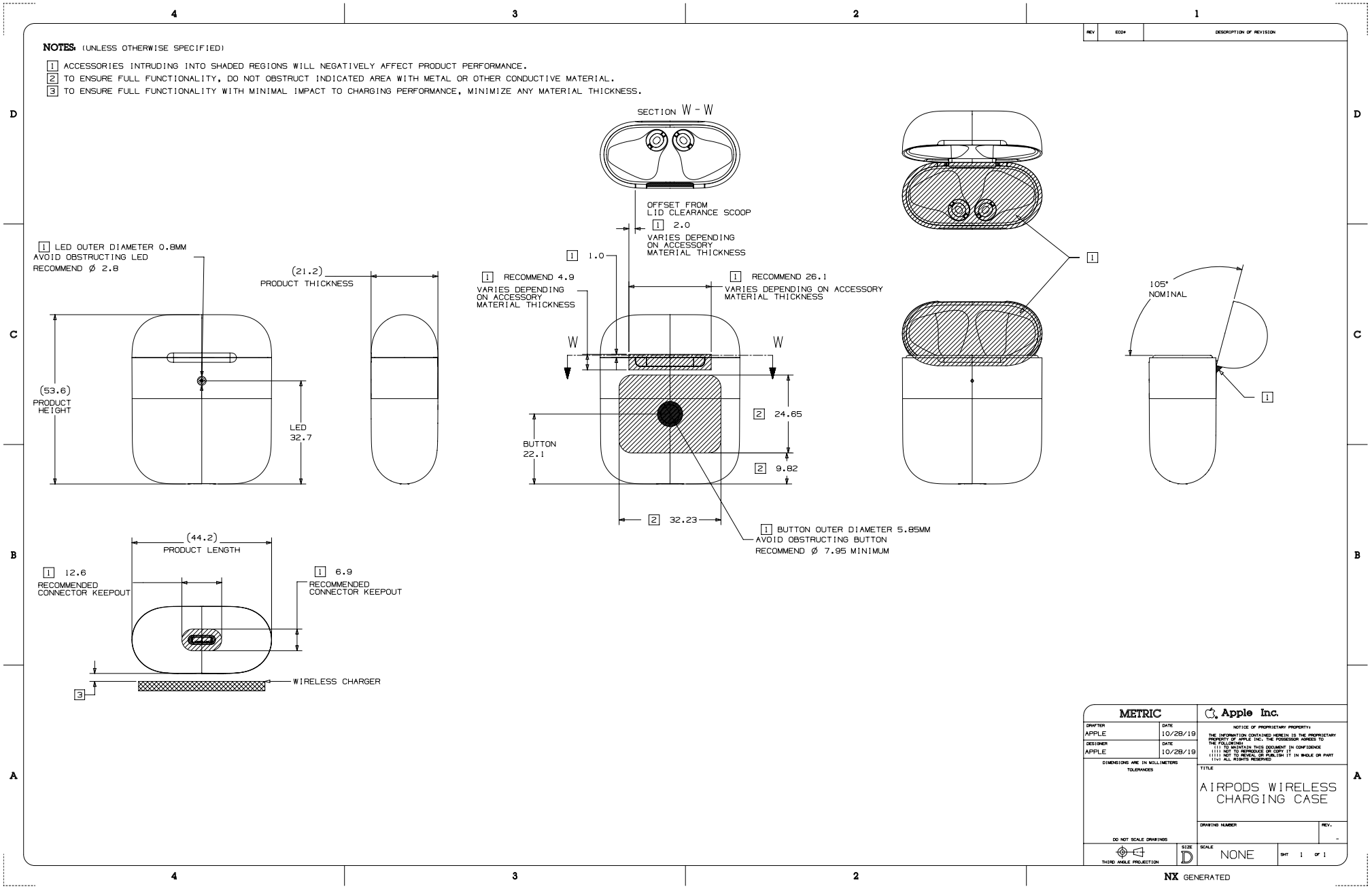

Copyright © 2024 Apple Inc. All Rights Reserved.

58.239 AirPods (1st generation) and AirPods (2nd generation)

NOTES: (UNLESS OTHERWISE SPECIFIED)

[1] ACCESSORIES INTRUDING INTO SHADED REGIONS WILL NEGATIVELY AFFECT PRODUCT PERFORMANCE.

[2] ACCESSORIES MUST NOT COVER THESE METAL SURFACES.

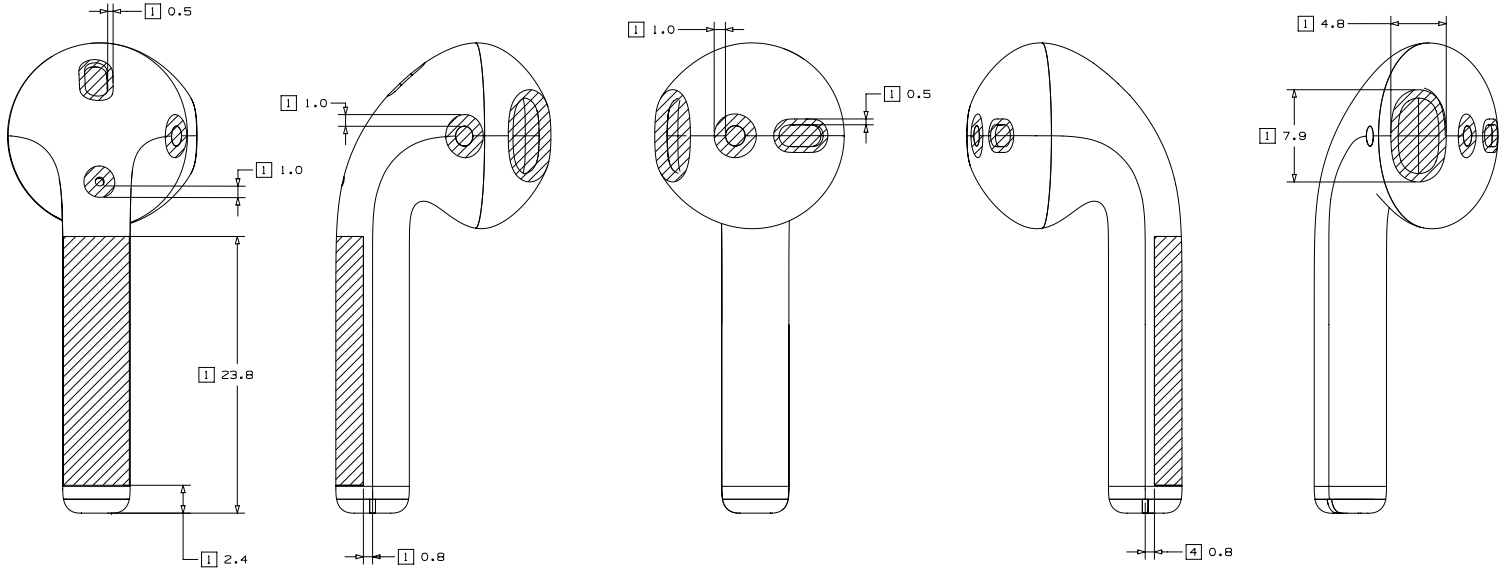

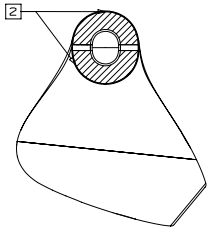

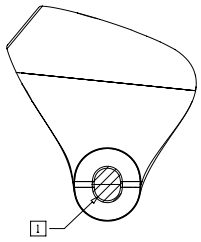

METRIC	Apple Inc.
APPLE INC. 01/10/17	NOTICE OF PROPRIETARY PROPERTY: THE INFORMATION CONTAINED HEREIN IS THE PROPRIETARY PROPERTY OF APPLE INC. THE POSSESSOR AGREES TO THE FOLLOWING: (i) TO MAINTAIN THIS DOCUMENT IN CONFIDENCE (ii) NOT TO COPY OR REPRODUCE IT (iii) NOT TO REVEAL OR PUBLISH IT IN WHOLE OR PART (iv) ALL RIGHTS RESERVED TITLE AIRPODS
THIRD ANGLE PROJECTION	SIZE D · SCALE NONE · SHT 1 OF 1

NX GENERATED

Copyright © 2024 Apple Inc. All Rights Reserved.

58.240 AirTag

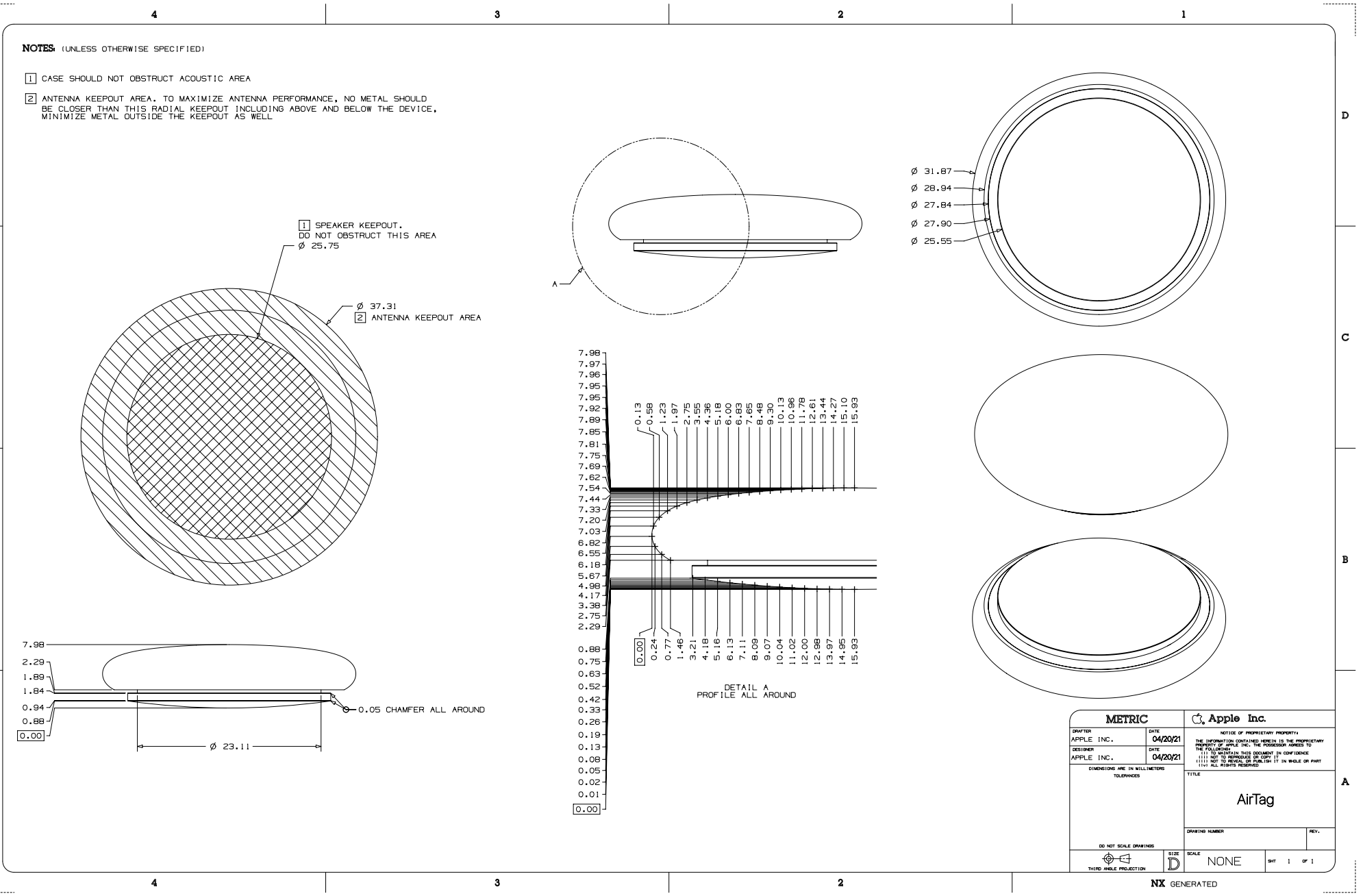

Copyright © 2024 Apple Inc. All Rights Reserved.

58.241 Apple TV 4K (3rd generation)

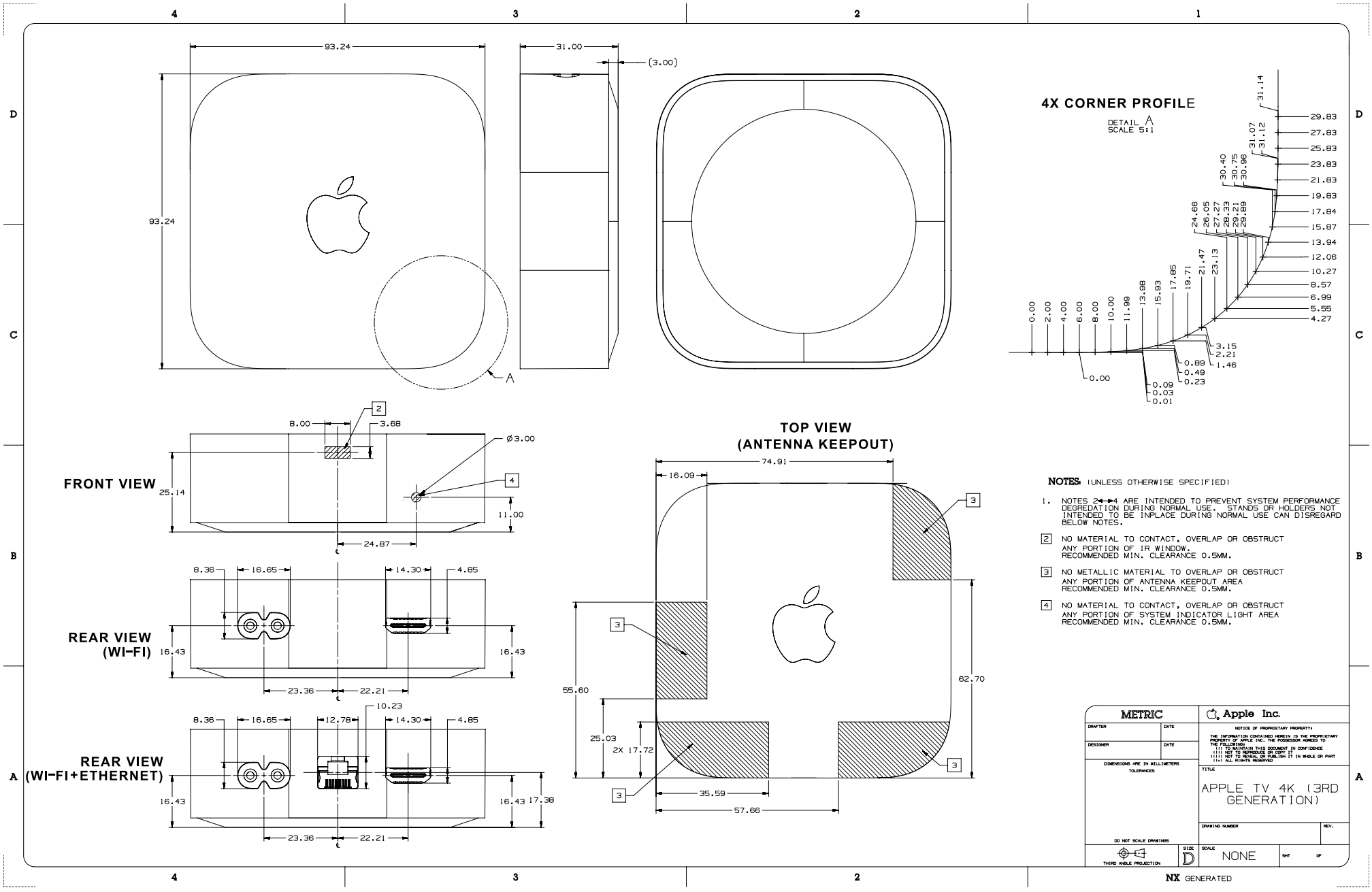

Copyright © 2024 Apple Inc. All Rights Reserved.

58.242 Siri Remote (3rd generation)

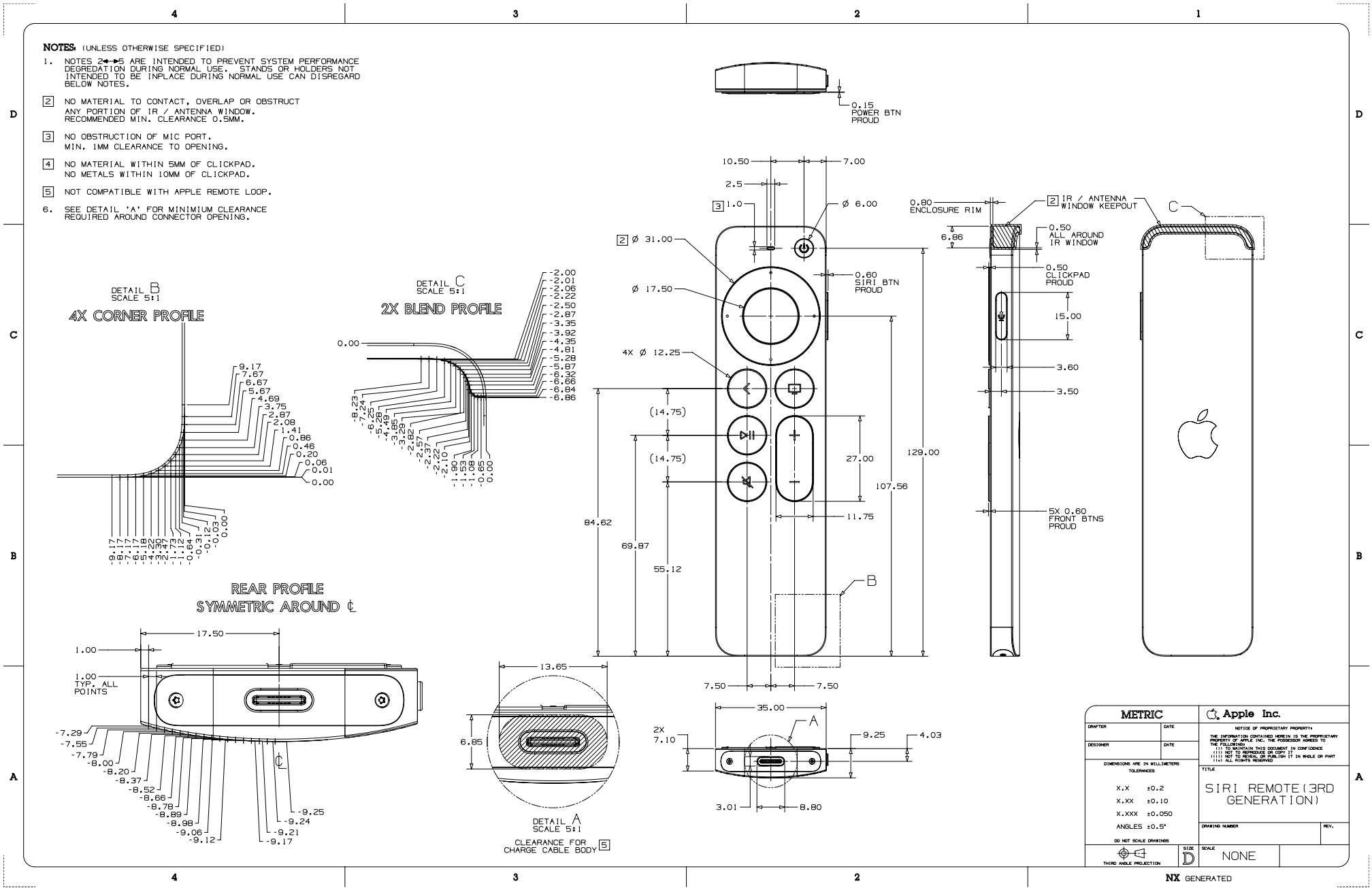

Copyright © 2024 Apple Inc. All Rights Reserved.

Revision History

This chapter describes changes to the Accessory Design Guidelines for Apple Devices from the previous revision, excluding stylistic and editorial changes.

Added Content

- Cases (page 32)
  - Near-Field Communication (NFC) (page 65)
- Apple Vision Pro Accessories (page 105)
- Ethernet over USB (page 149)
- iPad Pro 13-inch (M4) 1 of 5 (page 342)
- iPad Pro 13-inch (M4) 2 of 5 (page 343)
- iPad Pro 13-inch (M4) 3 of 5 (page 344)
- iPad Pro 13-inch (M4) 4 of 5 (page 345)
- iPad Pro 13-inch (M4) 5 of 5 (page 346)
- iPad Pro 11-inch (M4) 1 of 5 (page 347)
- iPad Pro 11-inch (M4) 2 of 5 (page 348)
- iPad Pro 11-inch (M4) 3 of 5 (page 349)
- iPad Pro 11-inch (M4) 4 of 5 (page 350)
- iPad Pro 11-inch (M4) 5 of 5 (page 351)
- iPad Air 13-inch (M2) 1 of 5 (page 352)
- iPad Air 13-inch (M2) 2 of 5 (page 353)
- iPad Air 13-inch (M2) 3 of 5 (page 354)
- iPad Air 13-inch (M2) 4 of 5 (page 355)
- iPad Air 13-inch (M2) 5 of 5 (page 356)
- iPad Air 11-inch (M2) 1 of 5 (page 357)
- iPad Air 11-inch (M2) 2 of 5 (page 358)
- iPad Air 11-inch (M2) 3 of 5 (page 359)
- iPad Air 11-inch (M2) 4 of 5 (page 360)
- iPad Air 11-inch (M2) 5 of 5 (page 361)
- Apple Vision Pro 1 of 6 (page 497)
- Apple Vision Pro 2 of 6 (page 498)
- Apple Vision Pro 3 of 6 (page 499)
- Apple Vision Pro 4 of 6 (page 500)

2024-05-13 | Copyright © 2024 Apple Inc. All Rights Reserved.

- Apple Vision Pro 5 of 6 (page 501)
- Apple Vision Pro 6 of 6 (page 502)
- Apple Vision Pro Battery (page 503)
- Apple Vision Pro Audio Strap (page 504)
- ZEISS Optical Inserts 1 of 4 (page 505)
- ZEISS Optical Inserts 2 of 4 (page 506)
- ZEISS Optical Inserts 3 of 4 (page 507)
- ZEISS Optical Inserts 4 of 4 (page 508)

Updated Content

- Remove iPod touch
- Remove Edge Press Gestures
- Headsets (page 82)
- Continuity Camera Mounts (page 117)
  - Center Stage on Apple TV (page 124)
- MagSafe Attach (page 156)
  - Test Procedures (page 172)
- Bluetooth Low Energy (BLE) (page 227)
  - Connection Parameters (page 229)
- Apple USB-C Analog Headset Module (page 235)
- Headset Remote and Microphone Transmitter (page 244)

2024-05-13 | Copyright © 2024 Apple Inc. All Rights Reserved.

Apple Inc.
Copyright © 2024 Apple Inc.
All rights reserved

Terms and Conditions ("Terms")

These Guidelines are made available to you for informational purposes only. If you make or distribute any accessory for an Apple device based on or in connection with these Guidelines ("Accessories"), you agree to the following covenants, terms and conditions:

All intellectual property rights in and to the Guidelines, and all technology described therein, are retained by Apple Inc. ("Apple"). You acknowledge and agree that Apple is not granting you, and nothing contained herein shall constitute or be construed or interpreted as a grant, by implication, estoppel or otherwise, of any license, covenant, immunity, release or right under or with respect to any intellectual property rights of Apple, including without limitation any rights to make, use, have made, sell, import, or otherwise relating in any way to any Apple device or technology described in or relating to the Guidelines.

You agree to follow Apple's Guidelines For Using Apple Trademarks and Copyrights as published on Apple's website at www.apple.com/legal/guidelinesfor3rdparties.html ("IP Guidelines") and as may be modified from time to time. You agree not to use the marks "Apple," the Apple Logo, "Mac", "iPhone," "iPod touch," "iPad," "Apple Watch," " WATCH" or any other marks belonging or licensed to Apple in any way except as expressly authorized in writing by Apple in each instance or as permitted in the IP Guidelines. You agree that all goodwill arising out of your authorized use of Apple's marks shall inure to the benefit of and belong to Apple.

You agree to indemnify, hold harmless, and, at Apple's option, defend, Apple against any claims, causes of action, losses, liabilities, damages, fines, settlements, costs, fees, and expenses (including attorney and other professional fees and expenses) arising out of: (i) your use of the Guidelines, including without limitation, any claims that any Accessory, or the combination of any Accessory with any software, technology, intellectual property, device, apparatus or assembly not supplied by Apple, infringes any patent, copyright, trade secret or other intellectual property right; (ii) the manufacture, use, promotion, distribution, sale, offer for sale, import, other distribution or exploitation or performance of any product, case, cover, band, charging stand, or other Accessory or product incorporating any Accessory, including any personal injury or product liability claims; or (iii) any failure to comply with any of the Guidelines. You will not, without Apple's prior written consent, make any admissions of liability, enter into any settlement that imposes any obligation on Apple, or publicize any settlement details relating to Apple. In addition, for any claims related to these Terms where you do not have an indemnification obligation, you shall provide all reasonable assistance to Apple and/or its counsel in connection with the defense, remedy or mitigation of such claims.

Applicable laws or regulations may impose additional restrictions or requirements on Accessories or products that incorporate the Accessories. You represent and warrant that you are in full compliance with all applicable laws, regulations, and policies in the United States and in any other location in which you engage, in whole or in part, in any activity related to the design, manufacture, marketing, sale or offer for sale, use, or other distribution of Accessories or products that incorporate the Accessories. You agree to promptly notify Apple of any complaints or threats of complaints regarding products that incorporate the Accessories with respect to any such regulatory requirements, in which case Apple may limit or terminate your ability to make, sell or purchase additional Accessories.

You expressly acknowledge and agree that access to the Guidelines is at your sole and entire risk and that you are solely responsible and liable for any harm or damage to any Apple product arising out of any breach by you of these covenants, terms and conditions. THE GUIDELINES ARE PROVIDED "AS IS" AND WITHOUT REPRESENTATION, WARRANTY, UPGRADES OR SUPPORT OF ANY KIND. APPLE AND APPLE'S DISTRIBUTORS, AFFILIATES, LICENSOR(S) AND SUPPLIER(S) ("APPLE PARTIES") EXPRESSLY DISCLAIM ALL REPRESENTATIONS, WARRANTIES AND CONDITIONS, EXPRESS OR IMPLIED, INCLUDING THE IMPLIED WARRANTIES AND CONDITIONS OF MERCHANTABILITY, OF SATISFACTORY QUALITY, OF FITNESS FOR A PARTICULAR PURPOSE, OF NON-INFRINGEMENT AND OF ACCURACY. NONE OF THE APPLE PARTIES WARRANTS THAT THE GUIDELINES OR ANY ACCESSORY WILL MEET YOUR REQUIREMENTS, THAT DEFECTS IN THEM WILL BE CORRECTED OR THAT THEY WILL BE COMPATIBLE WITH FUTURE APPLE PRODUCTS. NO ORAL OR WRITTEN INFORMATION OR ADVICE GIVEN BY ANY APPLE PARTY OR AN APPLE AUTHORIZED REPRESENTATIVE WILL CREATE A WARRANTY.

EXCEPT TO THE EXTENT SUCH A LIMITATION IS PROHIBITED BY LAW, IN NO EVENT WILL ANY APPLE PARTY BE LIABLE FOR ANY INCIDENTAL, SPECIAL, INDIRECT, CONSEQUENTIAL, EXEMPLARY OR PUNITIVE DAMAGES, INCLUDING LOST PROFITS, LOST REVENUES OR BUSINESS INTERRUPTIONS, ARISING OUT OF OR RELATING TO THE GUIDELINES UNDER A THEORY OF CONTRACT, WARRANTY, TORT (INCLUDING NEGLIGENCE), PRODUCTS LIABILITY OR OTHERWISE, EVEN IF ANY APPLE PARTY HAS BEEN ADVISED OF THE POSSIBILITY OF SUCH DAMAGES, AND NOTWITHSTANDING THE FAILURE OF ESSENTIAL PURPOSE OF ANY REMEDY. IN NO EVENT WILL THE APPLE PARTIES' TOTAL LIABILITY TO YOU FOR ALL DAMAGES AND CLAIMS UNDER OR RELATED TO THE GUIDELINES EXCEED THE AMOUNT OF US$50.00.

These Terms will be governed by and construed and enforced under the laws of the United States and the State of Delaware, except that the arbitration clause and any arbitration hereunder shall be governed by the Federal Arbitration Act, Chapters 1 and 2. The United Nations Convention on Contracts for the International Sale of Goods shall not apply to these Terms. All disputes arising out of or in connection with these Terms shall be finally settled under the Rules of Arbitration of the International Chamber of Commerce by one arbitrator appointed in accordance with such rules, and shall be conducted according to the International Bar Association Rules on the Taking of Evidence in International Arbitration. The arbitration shall take place in San Francisco, California. The arbitration shall be conducted in English. The award shall be rendered within six months of the commencement of the arbitration, unless the arbitrator determines that the interest of justice requires that such limit be extended.