Apple 设备配件设计准则

R21 版

目录

概述 18

1. 简介 19

2. 要求 20

3. 术语 21

3.1 设备 21
3.2 配件 21
3.3 组件 21
3.4 控制表面 21
3.5 直接用户操作 22
3.6 内置连接线 22
3.7 配件接口规范 22
3.8 Apple MFi 许可计划 23

配件 24

4. 所有配件 25

4.1 刮伤和损坏 25
4.2 合规性测试 25
4.3 集成式 USB 插口 25
4.4 用户提供的连接线和交流电源适配器 25
4.5 TDMA 噪音 26
4.6 附件 26
4.7 磁场干扰 26
4.8 射频 (RF) 性能 27
4.8.1 材料和涂层 27
4.8.2 天线避开区域 28
4.8.3 无线 (OTA) 传输/接收 28
4.8.4 比吸收率 (SAR) 28
4.8.5 近场通信 (NFC) 29
4.9 散热管理 30

4.10 三角架连接 30

5. 保护壳 31

5.1 产品设计 31
5.1.1 设备保护 31
5.1.2 输入和互连操作 32
5.1.3 基座兼容性 36
5.1.4 无线充电和后置插袋 36
5.2 声学 36
5.2.1 通话质量 36
5.2.2 扬声器至麦克风的耦合 37
5.2.3 扬声器/麦克风开口 37
5.3 环境光传感器和距离感应器 39
5.4 触感引擎 39
5.5 磁场干扰 40
5.6 触控 ID 40
5.7 摄像头 41
5.7.1 几何形状 41
5.7.2 颜色 41
5.7.3 表面处理 41
5.7.4 图像质量下降示例 42
5.8 可靠性 42
5.8.1 设备插入和取出 43
5.8.2 色牢度 43
5.9 环境 43
5.10 测试规程 43
5.10.1 设备型号 43
5.10.2 产品设计 55
5.10.3 触感引擎 58
5.10.4 触控 ID 传感器覆膜 58
5.10.5 摄像头 59
5.10.6 指南针 60
5.10.7 声学 61

6. 保护盖 63

6.1 磁场干扰 63
6.2 智能保护盖 63

7. 屏幕覆膜 65

7.1 产品设计 65

7.1.1 透射率 65
7.1.2 红外透射率 66
7.1.3 透射雾度 66
7.1.4 灵动岛 66
7.2 边缘轻扫手势和边缘按压手势 67

8. 摄像头附件 68
8.1 磁场干扰 68

9. 转换器 69
9.1 耳机转换器（闪电至 3.5 mm） 69
9.2 USB-A/USB-C 至闪电耳机转换器 69
9.3 以太网转换器（闪电至 RJ45） 69
9.4 闪电至 USB Micro-B 转换器 70

10. 交流电源适配器 71
10.1 转换器开关频率 71
10.2 YCAP 交流电容器 71
10.3 阻抗稳定性 71
10.4 保险丝保护 72
10.5 短路响应 72

11. 外接电池 73

12. 耳机 74
12.1 产品设计 74
12.2 音频接口 74
12.3 遥控器 74
12.4 USB-C 耳机标识 75

13. 闪光灯 76

14. 键盘 78
14.1 要求 78
14.2 示例 82
14.2.1 HID 报告描述符示例 82

15. 触控板 84
15.1 要求 84
15.1.1 与键盘集成 84

15.1.2 HID 报告描述符 84
15.1.3 共存情况 85
15.1.4 性能 85
15.1.5 输入置信度 86
15.1.6 点按唤醒 86
15.2 示例 86
15.2.1 HID 报告描述符示例 86
15.2.2 触控板示例 89

16. 外部存储 93
16.1 要求 93
16.2 ProRes 4K（最高 60 fps） 93

17. AirPods 配件 94
17.1 充电盒盖 94
17.2 充电器 94
17.3 测试规程 95
17.3.1 电源 95

18. 表带 96
18.1 要求 96
18.2 Apple Watch 表带接口 98
18.3 Apple Watch 凸耳组合部件示例 99
18.4 Apple Watch 凸耳示例 101

19. 待机显示支架 102
19.1 产品设计 103
19.2 测试规程 104
19.2.1 器材 104
19.2.2 启用待机显示 104
19.2.3 产品设计 104

20. 连续互通相机支架 105
20.1 产品设计 106
20.2 Apple TV 支架 107
20.3 MacBook 支架 108
20.4 iMac 或显示器支架 109
20.5 测试规程 110
20.5.1 器材 110
20.5.2 在 Apple TV 启用连续互通相机 110

20.5.3 在 Mac 上启用连续互通相机 110
20.5.4 产品设计 111
20.5.5 人物居中 111
20.5.6 桌上视角 112

功能 113

21. 蓝牙配件标识 114
21.1 HFP 命令 AT+XAPL 114

22. 配件供电 (USB-C) 115
22.1 可用电流 115
22.2 快速角色转换 (FRS) 116
22.3 测试规程 116
22.3.1 最大配件功率 116

23. 配件供电（闪电） 118

24. App 发现 119

25. App 启动 120

26. App 匹配 121

27. 蓝牙耳机电池电量指示 122
27.1 HFP 命令 AT+IPHONEACCEV 122

28. 设备供电 (USB-C) 123
28.1 外部电源 123
28.2 电源状态更改 123

29. 设备供电（闪电） 125
29.1 直接电源 125
29.2 外部电源 125
29.3 声明供电能力 126
29.4 使用 USB 接口供电 126
29.5 为多个接口添加标签 126
29.6 iPhone 快速充电 (20 W) 126
29.7 过流和短路保护 127

29.8 过流和短路保护重置 128
29.9 电源状态更改 128

30. 设备供电（感应式） 129
30.1 Qi 无线充电 129
30.2 MagSafe 130
30.3 电磁兼容性 (EMC) 130

31. 外部配件协议 133

32. HID 耳机遥控器 134
32.1 要求 134
32.2 示例 135
32.2.1 耳机遥控器 HID 报告描述符示例（电话） 135
32.2.2 耳机遥控器 HID 报告描述符示例（媒体播放） 135
32.2.3 耳机遥控器 HID 报告描述符示例（电话和媒体播放） 136

33. 位置信息 137

34. MagSafe 磁吸 138
34.1 MagSafe 保护壳磁铁阵列 139
34.1.1 产品设计 139
34.1.2 机械 139
34.1.3 磁场干扰 145
34.2 MagSafe 配件磁铁阵列 146
34.2.1 产品设计 146
34.2.2 机械 146
34.3 MagSafe 配件机壳几何结构 153
34.4 测试规程 154
34.4.1 MagSafe 保护壳磁铁阵列 154
34.4.2 MagSafe 配件磁铁阵列 157

35. 媒体资料库访问 159

36. 乐器数字接口 (MIDI) 160
36.1 要求 160
36.2 测试规程 160

37. “正在播放”更新 161

2023/10/10 | 版权所有 © 2023 Apple Inc. 保留所有权利。

38. 带外蓝牙配对 162

39. Siri 163
39.1 启用自定 Siri 命令 163
39.2 获取 Siri 可用性信息 163
39.2.1 在连接时获取状态信息 163
39.2.2 从设备接收 Siri 可用性更新 164
39.3 发起 Siri 会话 164
39.3.1 从配件发起会话 165
39.3.2 从设备发起会话 166
39.3.3 从配件结束会话 166
39.4 Siri Eyes Free 模式 167
39.4.1 HFP 命令 AT+APLEFM 167
39.5 改善语音识别 167
39.5.1 宽带语音支持 168
39.6 优化 Siri 体验 168
39.7 常见的 Siri 应用 168
39.7.1 连接建立后的初始化规程 169
39.7.2 使用 Siri 拨打电话 169
39.7.3 使用 Siri 进行音频路由和媒体播放 170
39.7.4 使用 Siri 获取导航指示 170
39.8 在车内通过 Siri Eyes Free 进行用户交互 170
39.9 从设备启用/停用 Siri 172
39.10 测试规程 172
39.10.1 Siri Eyes Free 172

40. Wi-Fi 信息共享 176

协议 177

41. USB 供电能力供应商请求 178

42. USB D+/D- 电阻网络 179
42.1 声明电源功能 179
42.2 确定电源电流限制 180

43. USB 供电 182

44. USB Type-C 电流 183

45. 高级音频分发描述文件 (A2DP) 184
45.1 蓝牙 A2DP 规范 184
45.1.1 AVDTP 事务 184
45.2 子带编解码器 (SBC) 184
45.3 MPEG 2/4 AAC 编解码器 185
45.4 测试规程 186
45.4.1 音频质量 186
45.4.2 音频切换 186
45.4.3 HFP 交互 186
45.4.4 Siri 186
45.4.5 视频播放 186

46. iAP2 187

47. 人机接口设备 (HID) 188
47.1 要求 188
47.1.1 报告描述符 188
47.1.2 USB 189
47.2 测试规程 189
47.2.1 通用 189

传输 190

48. 蓝牙 191
48.1 增强数据速率 191
48.2 自适应跳频 191
48.3 低功耗监听模式 191
48.4 角色和拓扑管理 192
48.5 扩展查询响应 192
48.6 安全简易配对 193
48.7 配对按钮 193
48.8 设备类别 (CoD) 193
48.9 链路监控超时 193
48.10 延迟报告 194
48.11 描述文件 194
48.11.1 设备 ID 描述文件 (DID) 194
48.11.2 服务发现协议 (SDP) 194
48.11.3 免提描述文件 (HFP) 195
48.11.4 信息访问描述文件 (MAP) 196

48.11.5 音频/视频远程控制描述文件 (Audio/Video Remote Control Profile) (AVRCP) 197
48.11.6 高级音频分发描述文件 (A2DP) 198
48.12 音频路由 199
48.12.1 使用 HFP 描述文件接收音频数据 199
48.12.2 使用 A2DP 描述文件接收音频数据 199
48.13 HID 201

49. 低功耗蓝牙 (BLE) 202
49.1 角色 202
49.2 广播频道 202
49.3 广播 PDU 202
49.4 广播数据 202
49.5 广播间隔 203
49.6 连接参数 203
49.7 数据包长度扩展 204
49.8 隐私 205
49.9 权限 205
49.10 配对 205
49.11 MTU 大小 205
49.12 服务 206
49.12.1 通用访问描述文件服务 206
49.12.2 通用属性描述文件服务 206
49.12.3 设备信息服务 206
49.12.4 可用服务 206
49.13 GATT 服务器 207

模块 208

50. Apple USB-C 模拟耳机模块 209
50.1 概述 209
50.1.1 其他规范和支持 210
50.2 机械 210
50.3 板分配 210
50.4 电气 211
50.5 C125 尺寸 212

元件 213

51. Apple 耳机遥控器和麦克风发射器 214
51.1 要求 214

接口 219

52. USB-A 插口 220
52.1 机械 220
52.2 电气 220

53. USB-C 插头 221
53.1 机械 221
53.2 电气 222
53.2.1 获得电能 222
53.2.2 供电 222
53.3 测试规程 223
53.3.1 机械 223
53.3.2 接口测试 ID 223
53.3.3 获得电能 223

54. USB-C 插口 224
54.1 机械 224
54.2 电气 224
54.2.1 获得电能 224
54.2.2 供电 225
54.3 USB-C 插口配件避开区域 226
54.4 测试规程 227
54.4.1 接口测试 ID 227
54.4.2 获得电能 227
54.4.3 供电 228

工具 229

55. Accessory Developer Assistant (ADA) 230
55.1 自动对焦和光学图像防抖测试描述文件 230

参考 231

56. 设备尺寸图 232

56.1 iPhone 15 Pro Max 1/3 238
56.2 iPhone 15 Pro Max 2/3 239
56.3 iPhone 15 Pro Max 3/3 240
56.4 iPhone 15 Pro 1/3 241
56.5 iPhone 15 Pro 2/3 242
56.6 iPhone 15 Pro 3/3 243
56.7 iPhone 15 Plus 1/3 244
56.8 iPhone 15 Plus 2/3 245
56.9 iPhone 15 Plus 3/3 246
56.10 iPhone 15 1/3 247
56.11 iPhone 15 2/3 248
56.12 iPhone 15 3/3 249
56.13 iPhone 14 Pro Max 1/3 250
56.14 iPhone 14 Pro Max 2/3 251
56.15 iPhone 14 Pro Max 3/3 252
56.16 iPhone 14 Pro 1/3 253
56.17 iPhone 14 Pro 2/3 254
56.18 iPhone 14 Pro 3/3 255
56.19 iPhone 14 Plus 1/3 256
56.20 iPhone 14 Plus 2/3 257
56.21 iPhone 14 Plus 3/3 258
56.22 iPhone 14 1/3 259
56.23 iPhone 14 2/3 260
56.24 iPhone 14 3/3 261
56.25 iPhone 13 Pro Max 1/2 262
56.26 iPhone 13 Pro Max 2/2 263
56.27 iPhone 13 Pro 1/2 264
56.28 iPhone 13 Pro 2/2 265
56.29 iPhone 13 1/2 266
56.30 iPhone 13 2/2 267
56.31 iPhone 13 mini 1/2 268
56.32 iPhone 13 mini 2/2 269
56.33 iPhone 12 Pro Max 1/2 270
56.34 iPhone 12 Pro Max 2/2 271
56.35 iPhone 12 Pro 1/2 272
56.36 iPhone 12 Pro 2/2 273
56.37 iPhone 12 1/2 274
56.38 iPhone 12 2/2 275

2023/10/10 | 版权所有 © 2023 Apple Inc. 保留所有权利。

56.39 iPhone 12 mini 1/2 276
56.40 iPhone 12 mini 2/2 277
56.41 iPhone SE（第 3 代）和 iPhone SE（第 2 代） 278
56.42 iPhone 11 Pro Max 279
56.43 iPhone 11 Pro 280
56.44 iPhone 11 281
56.45 iPhone XS Max 282
56.46 iPhone XS 283
56.47 iPhone XR 284
56.48 iPhone X 285
56.49 iPhone 8 Plus 286
56.50 iPhone 8 287
56.51 iPhone 7 Plus 288
56.52 iPhone 7 289
56.53 iPhone 6s Plus 290
56.54 iPhone 6s 291
56.55 iPhone 6 Plus 292
56.56 iPhone 6 293
56.57 iPhone 5s 和 iPhone SE 294
56.58 iPhone 5c 295
56.59 iPhone 5 296
56.60 12.9 英寸 iPad Pro（第 6 代）1/5 297
56.61 12.9 英寸 iPad Pro（第 6 代）2/5 298
56.62 12.9 英寸 iPad Pro（第 6 代）3/5 299
56.63 12.9 英寸 iPad Pro（第 6 代）4/5 300
56.64 12.9 英寸 iPad Pro（第 6 代）5/5 301
56.65 11 英寸 iPad Pro（第 4 代）1/5 302
56.66 11 英寸 iPad Pro（第 4 代）2/5 303
56.67 11 英寸 iPad Pro（第 4 代）3/5 304
56.68 11 英寸 iPad Pro（第 4 代）4/5 305
56.69 11 英寸 iPad Pro（第 4 代）5/5 306
56.70 iPad（第 10 代）1/6 307
56.71 iPad（第 10 代）2/6 308
56.72 iPad（第 10 代）3/6 309
56.73 iPad（第 10 代）4/6 310
56.74 iPad（第 10 代）5/6 311
56.75 iPad（第 10 代）6/6 312
56.76 iPad Air（第 5 代）和 iPad Air（第 4 代）1/5 313
56.77 iPad Air（第 5 代）和 iPad Air（第 4 代）2/5 314

2023/10/10 | 版权所有 © 2023 Apple Inc. 保留所有权利。

56.78 iPad Air（第 5 代）和 iPad Air（第 4 代）3/5 315
56.79 iPad Air（第 5 代）和 iPad Air（第 4 代）4/5 316
56.80 iPad Air（第 5 代）和 iPad Air（第 4 代）5/5 317
56.81 iPad mini（第 6 代）1/6 318
56.82 iPad mini（第 6 代）2/6 319
56.83 iPad mini（第 6 代）3/6 320
56.84 iPad mini（第 6 代）4/6 321
56.85 iPad mini（第 6 代）5/6 322
56.86 iPad mini（第 6 代）6/6 323
56.87 iPad（第 9 代）、iPad（第 8 代）和 iPad（第 7 代）1/4 324
56.88 iPad（第 9 代）、iPad（第 8 代）和 iPad（第 7 代）2/4 325
56.89 iPad（第 9 代）、iPad（第 8 代）和 iPad（第 7 代）3/4 326
56.90 iPad（第 9 代）、iPad（第 8 代）和 iPad（第 7 代）4/4 327
56.91 12.9 英寸 iPad Pro（第 5 代）1/5 328
56.92 12.9 英寸 iPad Pro（第 5 代）2/5 329
56.93 12.9 英寸 iPad Pro（第 5 代）3/5 330
56.94 12.9 英寸 iPad Pro（第 5 代）4/5 331
56.95 12.9 英寸 iPad Pro（第 5 代）5/5 332
56.96 11 英寸 iPad Pro（第 3 代）1/5 333
56.97 11 英寸 iPad Pro（第 3 代）2/5 334
56.98 11 英寸 iPad Pro（第 3 代）3/5 335
56.99 11 英寸 iPad Pro（第 3 代）4/5 336
56.100 11 英寸 iPad Pro（第 3 代）5/5 337
56.101 12.9 英寸 iPad Pro（第 4 代）1/5 338
56.102 12.9 英寸 iPad Pro（第 4 代）2/5 339
56.103 12.9 英寸 iPad Pro（第 4 代）3/5 340
56.104 12.9 英寸 iPad Pro（第 4 代）4/5 341
56.105 12.9 英寸 iPad Pro（第 4 代）5/5 342
56.106 11 英寸 iPad Pro（第 2 代）1/5 343
56.107 11 英寸 iPad Pro（第 2 代）2/5 344
56.108 11 英寸 iPad Pro（第 2 代）3/5 345
56.109 11 英寸 iPad Pro（第 2 代）4/5 346
56.110 11 英寸 iPad Pro（第 2 代）5/5 347
56.111 iPad Air（第 3 代）无线局域网机型 1/3 348
56.112 iPad Air（第 3 代）无线局域网机型 2/3 349
56.113 iPad Air（第 3 代）无线局域网机型 3/3 350
56.114 iPad Air（第 3 代）无线局域网 + 蜂窝网络机型 1/3 351
56.115 iPad Air（第 3 代）无线局域网 + 蜂窝网络机型 2/3 352
56.116 iPad Air（第 3 代）无线局域网 + 蜂窝网络机型 3/3 353

2023/10/10 | 版权所有 © 2023 Apple Inc. 保留所有权利。

56.117 iPad mini（第 5 代）无线局域网机型 1/3 354
56.118 iPad mini（第 5 代）无线局域网机型 2/3 355
56.119 iPad mini（第 5 代）无线局域网机型 3/3 356
56.120 iPad mini（第 5 代）无线局域网 + 蜂窝网络机型 1/3 357
56.121 iPad mini（第 5 代）无线局域网 + 蜂窝网络机型 2/3 358
56.122 iPad mini（第 5 代）无线局域网 + 蜂窝网络机型 3/3 359
56.123 12.9 英寸 iPad Pro（第 3 代）1/3 360
56.124 12.9 英寸 iPad Pro（第 3 代）2/3 361
56.125 12.9 英寸 iPad Pro（第 3 代）3/3 362
56.126 11 英寸 iPad Pro（第 1 代）1/3 363
56.127 11 英寸 iPad Pro（第 1 代）2/3 364
56.128 11 英寸 iPad Pro（第 1 代）3/3 365
56.129 12.9 英寸 iPad Pro（第 2 代）无线局域网机型 366
56.130 12.9 英寸 iPad Pro（第 2 代）无线局域网 + 蜂窝网络机型 367
56.131 12.9 英寸 iPad Pro（第 2 代）磁体/霍尔效应传感器 1/2 368
56.132 12.9 英寸 iPad Pro（第 2 代）磁体/霍尔效应传感器 2/2 369
56.133 10.5 英寸 iPad Pro 无线局域网机型 370
56.134 10.5 英寸 iPad Pro 无线局域网 + 蜂窝网络机型 371
56.135 10.5 英寸 iPad Pro 磁体/霍尔效应传感器 1/2 372
56.136 10.5 英寸 iPad Pro 磁体/霍尔效应传感器 2/2 373
56.137 iPad（第 5 代和第 6 代）无线局域网 + 蜂窝网络机型 374
56.138 iPad（第 5 代和第 6 代）磁体/霍尔效应传感器 1/2 375
56.139 iPad（第 5 代和第 6 代）磁体/霍尔效应传感器 2/2 376
56.140 9.7 英寸 iPad Pro 无线局域网机型 377
56.141 9.7 英寸 iPad Pro 无线局域网 + 蜂窝网络机型 378
56.142 9.7 英寸 iPad Pro 磁体/霍尔效应传感器 1/2 379
56.143 9.7 英寸 iPad Pro 磁体/霍尔效应传感器 2/2 380
56.144 12.9 英寸 iPad Pro（第 1 代）无线局域网机型 381
56.145 12.9 英寸 iPad Pro（第 1 代）无线局域网 + 蜂窝网络机型 382
56.146 12.9 英寸 iPad Pro（第 1 代）磁体/霍尔效应传感器 1/2 383
56.147 12.9 英寸 iPad Pro（第 1 代）磁体/霍尔效应传感器 2/2 384
56.148 iPad mini 4 无线局域网机型 385
56.149 iPad mini 4 无线局域网 + 蜂窝网络机型 386
56.150 iPad mini 4 磁体/霍尔效应传感器 387
56.151 iPad Air 2 无线局域网机型 388
56.152 iPad Air 2 无线局域网 + 蜂窝网络机型 389
56.153 iPad mini 2 和 iPad mini 3 无线局域网机型 390
56.154 iPad mini 2 和 iPad mini 3 无线局域网 + 蜂窝网络机型 391
56.155 iPad Air 无线局域网机型 392

2023/10/10 | 版权所有 © 2023 Apple Inc. 保留所有权利。

56.156 iPad Air 无线局域网 + 蜂窝网络机型 393
56.157 iPad mini 无线局域网机型 394
56.158 iPad mini 无线局域网 + 蜂窝网络机型 395
56.159 iPad（第 4 代）无线局域网机型 396
56.160 iPad（第 4 代）无线局域网 + 蜂窝网络机型 397
56.161 iPod touch（第 6 代）和 iPod touch（第 7 代） 398
56.162 iPod touch（第 5 代） 399
56.163 Apple Watch Ultra 2，1/3 400
56.164 Apple Watch Ultra 2，2/3 401
56.165 Apple Watch Ultra 2，3/3 402
56.166 Apple Watch Series 9（45 毫米） 403
56.167 Apple Watch Series 9（41 毫米） 404
56.168 Apple Watch Ultra，1/3 405
56.169 Apple Watch Ultra，2/3 406
56.170 Apple Watch Ultra，3/3 407
56.171 Apple Watch Series 8（45 毫米） 408
56.172 Apple Watch Series 8（41 毫米） 409
56.173 Apple Watch SE（44 毫米） 410
56.174 Apple Watch SE（40 毫米） 411
56.175 Apple Watch Series 7（45 毫米） 412
56.176 Apple Watch Series 7（41 毫米） 413
56.177 Apple Watch Series 6（44 毫米） 414
56.178 Apple Watch Series 6（40 毫米） 415
56.179 Apple Watch SE（第 1 代）（44 毫米） 416
56.180 Apple Watch SE（第 1 代）（40 毫米） 417
56.181 Apple Watch Series 5（44 毫米） 418
56.182 Apple Watch Series 5（40 毫米） 419
56.183 Apple Watch Series 5（陶瓷，44 毫米） 420
56.184 Apple Watch Series 5（陶瓷，40 毫米） 421
56.185 Apple Watch Series 4（44 毫米） 422
56.186 Apple Watch Series 4（40 毫米） 423
56.187 Apple Watch Series 3（陶瓷，42 毫米） 424
56.188 Apple Watch Series 3（陶瓷，38 毫米） 425
56.189 Apple Watch Series 3（金属，42 毫米） 426
56.190 Apple Watch Series 3（金属，38 毫米） 427
56.191 Apple Watch Series 2（陶瓷，42 毫米） 428
56.192 Apple Watch Series 2（陶瓷，38 毫米） 429
56.193 Apple Watch Series 2（金属，42 毫米） 430
56.194 Apple Watch Series 2（金属，38 毫米） 431

2023/10/10 | 版权所有 © 2023 Apple Inc. 保留所有权利。

56.195 Apple Watch（第 1 代）和 Apple Watch Series 1（42 毫米） 432
56.196 Apple Watch（第 1 代）和 Apple Watch Series 1（38 毫米） 433
56.197 适用于 AirPods Pro（第 2 代）的 MagSafe 充电盒 (USB-C) 1/3 434
56.198 适用于 AirPods Pro（第 2 代）的 MagSafe 充电盒 (USB-C) 2/3 435
56.199 适用于 AirPods Pro（第 2 代）的 MagSafe 充电盒 (USB-C) 3/3 436
56.200 适用于 AirPods Pro（第 2 代）的 MagSafe 充电盒 1/3 437
56.201 适用于 AirPods Pro（第 2 代）的 MagSafe 充电盒 2/3 438
56.202 适用于 AirPods Pro（第 2 代）的 MagSafe 充电盒 3/3 439
56.203 AirPods Pro（第 2 代） 440
56.204 适用于 AirPods（第 3 代）的 MagSafe 充电盒 441
56.205 AirPods（第 3 代） 442
56.206 适用于 AirPods Pro（第 1 代）的无线充电盒 443
56.207 AirPods Pro（第 1 代） 444
56.208 适用于 AirPods 的无线充电盒 445
56.209 AirPods（第 1 代）和 AirPods（第 2 代） 446
56.210 AirTag 447
56.211 Apple TV 4K（第 3 代） 448
56.212 Siri Remote（第 3 代） 449

修订历史记录 450
新增内容 450
更新内容 451

概述

1. 简介

[英语]

注：
这些 Apple 设备配件设计准则（以下简称“准则”）均受本文最后一页上提出的条款和条件约束。下载、访问或以其他方式使用这些准则，即表示你同意遵守这些条款和条件，并仅根据这些条款和条件使用这些准则。

这些准则涵盖以下方面：

- iOS 和 iPadOS 设备保护壳、保护盖、屏幕覆膜和摄像头附件的物理设计。
- 利用 USB-C 与 iOS 设备和 iPadOS 设备进行交互的硬件配件的规范。
- 利用蓝牙传输与 iOS 设备、iPadOS 设备、watchOS 设备、Apple tvOS 设备和 Mac 电脑进行通信的硬件配件规范。
- iOS 设备、iPadOS 设备和 AirPods 的交流电源适配器和外接电池设计。
- iOS 设备和 AirPods 的 Qi 无线发射器设计。
- 与 Apple Watch 兼容的表带配件物理设计。

这些准则不涉及配件通信的其他方面。如需其他方面的准则，请改为参阅“Apple MFi 许可计划（第 23 页）”和“配件接口规范（第 22 页）”。

2023/10/10 | 版权所有 © 2023 Apple Inc. 保留所有权利。

2. 要求

[英语]

陈述中所用的“应该”、“不应”、“要求”、“禁止”、“应当”、“不应当”、“建议”、“不建议”、“可以”、“可选”和“弃用”等词具有以下含义：

- “应该”或“要求”表示陈述内容属于绝对要求。
- “不应”或“禁止”表示陈述内容属于绝对禁止。
- “应当”或“建议”表示在选择不同的过程之前应该理解对应陈述的全部含义。
- “不应当”或“不建议”表示在选择这个过程之前应该理解对应陈述的全部含义。
- “可能”或“可选”表示陈述内容实属可选，而不能断言存在或不存在。
- “弃用”表示陈述内容仅用作历史用途，这个词的意思相当于“不应”。

2023/10/10 | 版权所有 © 2023 Apple Inc. 保留所有权利。

3. 术语 [英语]

3.1 设备 [英语]

*设备*是指 iPhone、iPad 或 iPod。

*iOS 设备*是指运行 iOS 的 iPhone 或 iPod。

*iPadOS 设备*是指运行 iPadOS 的 iPad。

*watchOS 设备*是指运行 watchOS 的 Apple Watch。

*Apple tvOS 设备*是指运行 Apple tvOS 的 Apple TV。

在适当的情况下，还将指明具体的 Apple 产品和操作系统。

3.2 配件 [英语]

*配件*是指使用本规范中所述接口与*设备*相连的任何产品。

3.3 组件 [英语]

*组件*是一种功能部件，或配件的构成部分。组件相互连接，并作为更大系统的一部分发挥作用。示例包括：

- 集成电路、微处理器、闪存、麦克风和扬声器。
- 数据传输接口，例如闪电接头、USB 接口或蓝牙无线电。
- 电源，例如电池或供电电源。
- 人机接口设备 (HID) 控制表面（第 21 页），例如播放/暂停按钮。

*组件*还可以指一组部件，例如键盘/触控板配件的键盘部分。

3.4 控制表面 [英语]

*控制表面*是一种人机接口设备 (HID) 组件，便于用户与配件进行交互。示例包括：

- 接口
- 按钮

- 开关
- 旋钮
- 控制杆
- 触摸屏或触敏型表面
- 麦克风
- 动作传感器/存在传感器

特定类型控制表面（例如按钮或开关）的参考只适用于这些控制表面类型。如果要求实施实体按钮，则应包含实体按钮。

3.5 直接用户操作 [英语]

*直接用户操作*是指用户使用控制表面（第 21 页）与配件进行交互。示例包括：

- 肢体姿势，例如：
  - 将配件吸附在设备上。
  - 按下按钮。
  - 触动开关。
  - 旋转旋钮。
  - 与触摸屏交互。
  - 挥手。
  - 移到通信范围之内/之外（适用于无线设备）。
- 语音输入。

除非获得用户的明确授权，否则配件不会自动进行用户输入。

3.6 内置连接线 [英语]

*内置连接线*是指一端与配件外壳永久连接的连接线。

3.7 配件接口规范 [英语]

Apple MFi 许可计划（第 23 页）的成员可以获得“配件接口规范”。

要使用其中一些功能，配件开发者需要加入这个计划，并将特定的 MFi 硬件集成到配件中。

3.8 Apple MFi 许可计划 [英语]

Apple MFi 许可计划可提供规范、组件、接口和其他资源的访问权限，以创建可与设备通信的配件。

请参阅 https://mfi.apple.com 以了解更多信息。

2023/10/10 | 版权所有 © 2023 Apple Inc. 保留所有权利。

配件

4. 所有配件 [英语]

本节所述的要求适用于所有配件，与配件支持的功能无关。

4.1 刮伤和损坏 [英语]

配件不应刮伤或损坏任何设备。

4.2 合规性测试 [英语]

配件不应假定连接到设备上时存在工作迹象即表示配件符合规范。这种方法没有考虑今后发布的设备或软件，而且很可能依赖于未记录的设备行为，这些行为随时都可能发生更改。

如果适用，配件应使用所有受支持功能的推荐测试规程来验证对应的设计和实施。

4.3 集成式 USB 插口 [英语]

如果配件包含用于从外部 USB 电源获得电能的 USB 插口，则应该满足以下要求：

- USB-B 插口应符合“USB 电池充电规范 1.2 版 (*USB Battery Charging Specification, Release 1.2*)”中的规定。
- USB-C 插口应该符合“获得电能（第 224 页）”中所述的要求。

4.4 用户提供的连接线和交流电源适配器 [英语]

如果配件拟与用户提供的连接线和/或交流电源适配器搭配使用，则应该设计为可以使用符合这一规范的任何连接线、交流电源适配器（第 73 页）或外接电池（第 71 页），包括 Apple 品牌的连接线和交流电源适配器。这类配件不应注明仅兼容 Apple 品牌的 USB 连接线或交流电源适配器。

这一兼容性要求适用于用户提供的连接线和电源适配器的各个方面。例如：

- 配件上的连接器插口应该可以插接所有符合规范的连接器模具，并且设备插口周围的任何配件开口应该提供足够的间隙，以便插接符合规范的连接器模具。
- 配件应该支持所有符合电气 DCR 和 SI 规范的连接线。

这类配件在开发期间除使用 Apple 品牌的连接线和交流电源适配器进行测试之外，还应该使用各种符合规范的连接线（如果适用，还包括相同品牌但不同长度的连接线）和交流电源适配器进行测试。

4.5 TDMA 噪音 [英语]

GSM 手机会发出辐射和传导射频噪音，可能导致从音频输出中产生时分多址 (TDMA) 声音。配件应尽量减少设备的声音干扰（通常称为 *TDMA 噪音*或*斩波器噪音*）与配件中电子元件的耦合。

4.6 附件 [英语]

连接至任何配件专用附件时，配件应该仍然符合规范要求。

配件附件示例包括但不限于：

- 用于保护壳的车载支架或桌面支架。
- 用于加密狗或保护壳的无线充电垫。
- 用于基座的可拆卸条形码扫描仪/信用卡读卡器。

4.7 磁场干扰 [英语]

除非另有规定，否则 Apple 建议避免在配件中使用任何磁性和金属组件。

只要声称与包含数字罗盘（磁力计）的设备兼容，配件应该尽可能减少对数字罗盘的干扰，且不应反复触发罗盘重新校准。

只要声称与包含自动对焦 (AF) 和/或光学图像防抖 (OIS) 的设备兼容，配件不应影响这些功能的运作。

以下设备具有光学图像防抖功能：

- iPhone 15 Pro Max
- iPhone 15 Pro
- iPhone 15 Plus
- iPhone 15
- iPhone 14 Pro Max
- iPhone 14 Pro
- iPhone 14 Plus
- iPhone 14
- iPhone SE（第 3 代）
- iPhone 13 Pro Max
- iPhone 13 Pro
- iPhone 13

- iPhone 13 mini
- iPhone 12 Pro Max
- iPhone 12 Pro
- iPhone 12
- iPhone 12 mini
- iPhone SE（第 2 代）
- iPhone 11 Pro Max
- iPhone 11 Pro
- iPhone 11
- iPhone XS Max
- iPhone XS
- iPhone XR
- iPhone X
- iPhone 8 Plus
- iPhone 8
- iPhone 7 Plus
- iPhone 7
- iPhone 6s Plus
- iPhone 6 Plus
- 12.9 英寸 iPad Pro（第 2 代）
- 10.5 英寸 iPad Pro

4.8 射频 (RF) 性能 [英语]

本节包含配件的 RF 性能要求和建议。

4.8.1 材料和涂层 [英语]

配件应当避免使用：

- 金属
- 导电材料或涂层
- 高介电材料（介电常数 >5 F/m）

这类材料会吸收射频能量，而且可能损害或降低蜂窝通信、GPS、WLAN、蓝牙和 NFC 的天线性能。

示例包括但不限于：

- 钢、铝、锰、钛等
- 含有碳、玻璃或金属镀层成分的塑料
- 金属涂料
- 含碳量高的黑色涂料

版权所有 © 2023 Apple Inc. 保留所有权利。

- 二氧化钛含量高的白色涂料
- 金属物理气相沉积 (PVD) 涂层

4.8.2 天线避开区域 [英语]

天线避开区域可在“设备尺寸图（第 232 页）”中找到。

如果在天线避开区域内使用会吸收射频能量的配件材料和涂层（第 27 页），会有较高的风险造成设备无线性能下降。

4.8.3 无线 (OTA) 传输/接收 [英语]

配件不应导致设备的 RF 传输效率大幅下降。这项性能的量化方法是测量设备所有工作频段的总辐射功率 (TRP)。

配件不应导致设备的 RF 接收灵敏度大幅下降。这项性能的量化方法是测量设备所有工作频段的等效全向灵敏度 (EIS)。

如果存在以下情况，配件可能有较高的风险导致设备 RF 性能大幅下降：

- 含有磁体。
- 侵入设备的天线避开（第 28 页）区域。
- 包含有源电子电路，例如：
  - 蓝牙无线电。
  - 开关式电源。
  - 高速数据接口。

设计时应该考虑所有配件配置，以最大程度地确保 RF 兼容性。示例包括但不限于：

- 配件开启/关闭。
- 配件打开/合上。
- 附件（第 26 页）存在/不存在。

应遵循良好的设计实践方法，以最大限度减少噪音并提高射频兼容性。这包括但不限于：

- 屏蔽数字电路和时钟信号。
- 最大限度减少来自数字接口的辐射。
- 解耦高频信号和电源。
- 滤除板外信号。
- 保持接地平面电路板的完整性。
- 最大限度减小电流环路面积。
- 确保线缆屏蔽端接正确。

4.8.4 比吸收率 (SAR) [英语]

Apple MFi 许可计划（第 23 页）提供了可对设备进行 SAR 测试的实验室列表。

4.8.5 近场通信 (NFC) [英语]

配件不应导致设备的 NFC 交易性能下降。

如果配件侵入设备的天线避开（第 28 页）区域，则配件可能有较高的风险导致设备的NFC交易性能下降。

以下设备支持 NFC：

- iPhone 15 Pro Max
- iPhone 15 Pro
- iPhone 15 Plus
- iPhone 15
- iPhone 14 Pro Max
- iPhone 14 Pro
- iPhone 14 Plus
- iPhone 14
- iPhone SE（第 3 代）
- iPhone 13 Pro Max
- iPhone 13 Pro
- iPhone 13
- iPhone 13 mini
- iPhone 12 Pro Max
- iPhone 12 Pro
- iPhone 12
- iPhone 12 mini
- iPhone SE（第 2 代）
- iPhone 11 Pro Max
- iPhone 11 Pro
- iPhone 11
- iPhone XS Max
- iPhone XS
- iPhone XR
- iPhone X
- iPhone 8 Plus
- iPhone 8
- iPhone 7 Plus
- iPhone 7
- iPhone SE
- iPhone 6s Plus
- iPhone 6s
- iPhone 6 Plus
- iPhone 6

2023/10/10 | 版权所有 © 2023 Apple Inc. 保留所有权利。

4.9 散热管理 [英语]

配件支持的温度范围应大于或等于其声称兼容的每一设备的已公布温度范围。

4.10 三角架连接 [英语]

三脚架连接应该符合 ISO 1222:2010 规定。请参阅 https://www.iso.org/standard/55918.html。

版权所有 © 2023 Apple Inc. 保留所有权利。

5. 保护壳 [英语]

保护壳是会充分包覆设备的配件。

如果配件会充分包覆设备，那么除非这个配件支持本规范中的其他功能，而这些功能的要求与本章中的要求相冲突，否则这个配件应该符合本章中所述的要求。

如果保护壳具有多个会充分包覆设备的用户可拆卸式组件，则每个组件各自都应该符合这些要求。

5.1 产品设计 [英语]

设计良好的保护壳应牢固地包覆设备，不会干扰设备的操作。在机械设计方面，应考虑的重要因素包括：能不能方便地使用设备的传感器、控制键和接口。所有设备的尺寸图均可在“设备尺寸图（第 232 页）”中找到。

5.1.1 设备保护 [英语]

保护壳应该为设备提供适当防护，确保设备以任意方向从 1 米高处跌落到坚硬地面时不会损坏。

装上保护壳后，以任意方向放在桌子或地板等平整表面时，设备上外露的玻璃与这个表面之间的距离不应少于 0.85 mm。理想情况下，在 1.00 mm 范围内不应有玻璃。应通过在外露的玻璃周围创建特征，使其远离平整表面，来为设备提供适当防护。

设计保护壳底部时应当注意，确保既能为设备提供保护，而又不影响设备扬声器、麦克风和接口的使用。例如，iPhone X 保护壳的底部应当：

- 不存在宽度超过 50 mm 的开口，详见图 5-1（第 32 页） 中的尺寸“A”。
- 至少采用 1.15 mm 厚的聚碳酸酯 (PC)，详见图 5-1（第 32 页） 中的尺寸“B”。

2023/10/10 | 版权所有 © 2023 Apple Inc. 保留所有权利。

图 5-1 设备保护

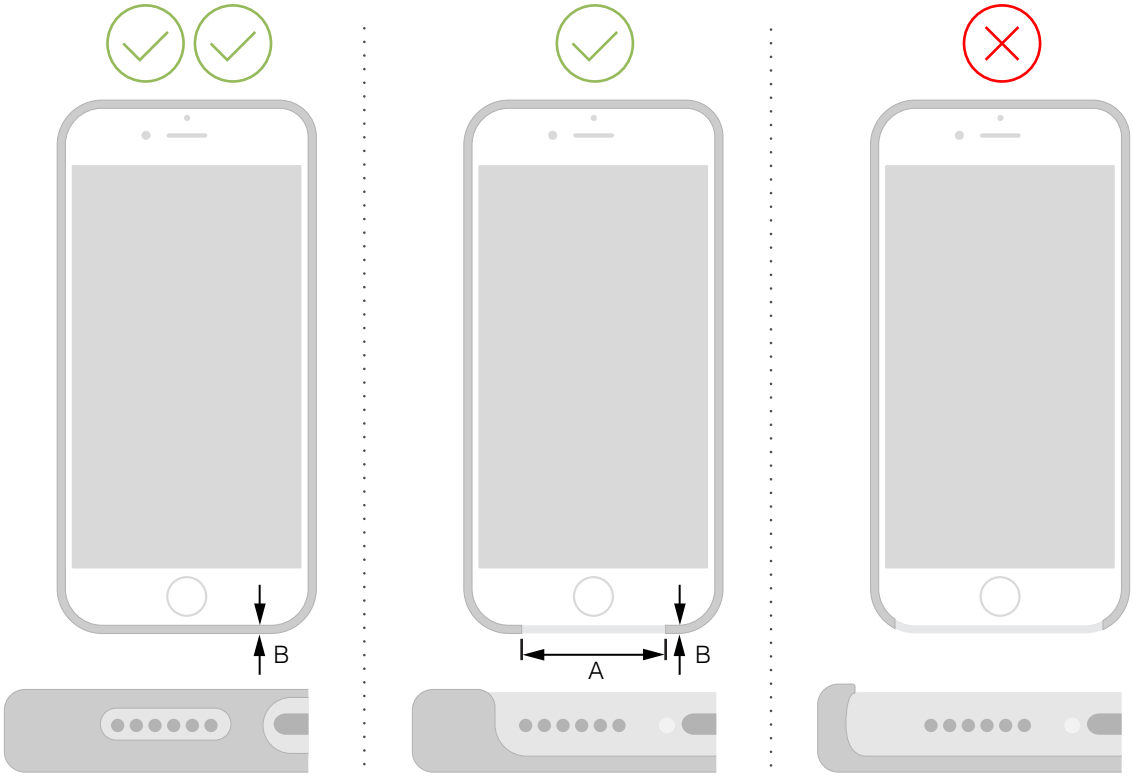

5.1.2 输入和互连操作 [英语]

保护壳应该能够让用户轻松地使用输入和互连操作。

5.1.2.1 控制键操作 [英语]

保护壳应该能够让用户轻松地使用和操作设备的机械控制键，例如：

- 音量按钮。
- 响铃/静音开关。
- 操作按钮。
- 侧边按钮。
- 主屏幕/触控 ID 传感器。
- 主屏幕按钮。
- 睡眠/唤醒按钮。

5.1.2.2 操作 USB-C 接口 [英语]

如果保护壳用于带有 USB-C 插口的设备，开口（即避开区域）需要满足以下要求：

- 尺寸应该至少为 12.35 mm x 6.50 mm。

- 尺寸应该至少为 12.45 mm x 6.60 mm，并带有全半径圆角，以兼容尽可能多的线缆和基座，详见“USB-C 插口配件避开区域（第 226 页）”。

USB-C 接口开口在设计上应该保留足够的裕量，以补偿保护壳材料的形状或尺寸变化。

5.1.2.3 闪电接口操作 [英语]

如果保护壳用于带有闪电插口的设备，开口（即避开区域）需要满足以下要求：

- 尺寸应该至少为 12.05 mm x 6.30 mm 并带有全半径圆角。
- 为确保兼容尽可能多的线缆和基座，尺寸应至少为 13.65 mm x 6.85 mm，详见图 5-2（第 33 页）。

图 5-2 闪电插口 (C37) 避开区域

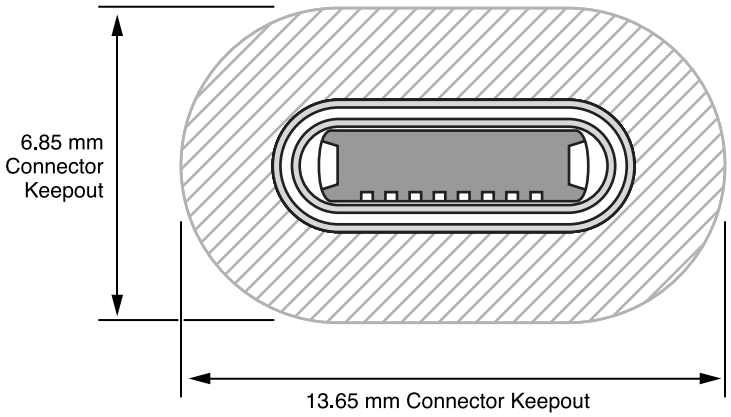

闪电接口开口在设计上应该保留足够的裕量，以补偿保护壳材料的形状或尺寸变化。

5.1.2.4 耳机插孔操作 [英语]

如果设备上配有耳机插口，保护壳应该确保能够轻松地使用这个插孔。

耳机插孔开口（即避开区域）需要满足以下要求：

- 直径应该至少为 6.0 mm，且深度不超过 14.0 mm。
- 为确保最好地兼容各种耳机，直径应至少为 6.5 mm，且深度不超过 10.0 mm。

耳机插孔开口在设计上应该保留足够的裕量，以补偿保护壳材料的形状或尺寸变化。

5.1.2.5 触摸屏 [英语]

相对水平面以 30°角度握持设备时，保护壳的任何边角均不应阻挡触摸屏上的水滴滑落。

外壳应允许沿触摸屏活动区域的边缘打开 120°（请参见图 5-3（第 34 页）），以确保与触摸屏功能的兼容性。如需了解活动区域，请参见“设备尺寸图（第 232 页）”。

图 5-3　触摸屏避开角度

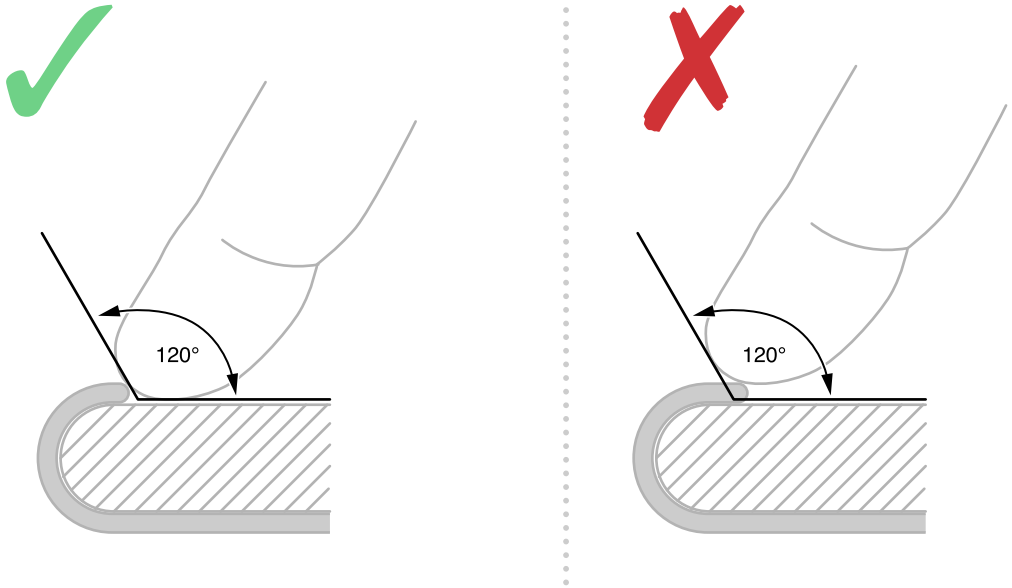

5.1.2.6 边缘轻扫手势　[英语]

用户应该能够轻松地使用边缘轻扫手势。

这类手势的示例包括但不限于：

- 从屏幕顶部边缘向下轻扫以打开“控制中心”或“通知中心”。
- 从屏幕底部边缘向上轻扫以返回主屏幕、显示应用切换器或打开“便捷访问”。
- 在“信息”或“邮件”中从屏幕左侧边缘向右轻扫以从对话返回。

以下设备会在纵向和横向模式中大量使用边缘轻扫手势：

- iPhone 15 Pro Max
- iPhone 15 Pro
- iPhone 15 Plus
- iPhone 15
- iPhone 14 Pro Max
- iPhone 14 Pro
- iPhone 14 Plus
- iPhone 14
- iPhone SE（第 3 代）
- iPhone 13 Pro Max
- iPhone 13 Pro
- iPhone 13
- iPhone 13 mini
- iPhone 12 Pro Max

2023/10/10 | 版权所有 © 2023 Apple Inc. 保留所有权利。

- iPhone 12 Pro
- iPhone 12
- iPhone 12 mini
- iPhone SE（第 2 代）
- iPhone 11 Pro Max
- iPhone 11 Pro
- iPhone 11
- iPhone XS Max
- iPhone XS
- iPhone XR
- iPhone X
- 12.9 英寸 iPad Pro（第 6 代）
- 11 英寸 iPad Pro（第 4 代）
- iPad（第 10 代）
- iPad Air（第 5 代）
- iPad mini（第 6 代）
- 12.9 英寸 iPad Pro（第 5 代）
- 11 英寸 iPad Pro（第 3 代）
- iPad Air（第 4 代）
- 12.9 英寸 iPad Pro（第 4 代）
- 11 英寸 iPad Pro（第 2 代）
- 12.9 英寸 iPad Pro（第 3 代）
- 11 英寸 iPad Pro（第 1 代）

5.1.2.7 边缘按压手势 [英语]

用户应该能够轻松地使用边缘按压手势。

以下设备支持边缘按压手势：

- iPhone 8 Plus
- iPhone 8
- iPhone 7 Plus
- iPhone 7
- iPhone 6s Plus
- iPhone 6s

在 iOS 9.0 及更高版本中，在屏幕左侧使用边缘按压手势可以调出任务切换器。

5.1.2.8 防护玻璃接触 [英语]

声称兼容以下设备的保护壳不应接触到设备尺寸图中定义的防护玻璃：

- iPhone SE（第 3 代）

- iPhone SE（第 2 代）
- iPhone 11 Pro Max
- iPhone 11 Pro
- iPhone 11
- iPhone XS Max
- iPhone XS
- iPhone XR
- iPhone X
- iPhone 8 Plus
- iPhone 8
- iPhone 7 Plus
- iPhone 7
- iPhone 6s Plus
- iPhone 6s
- iPhone 6 Plus
- iPhone 6

请参见“设备尺寸图（第 232 页）”。

5.1.3 基座兼容性 [英语]

设备底部与保护壳外侧之间的距离不应超过 1.8 mm，从而确保与各种基座兼容。

5.1.4 无线充电和后置插袋 [英语]

如果保护壳声称与 MagSafe 或 Qi 无线充电兼容（请参见“设备供电（感应式）（第 129 页）”），则保护壳上不应设有用来放置信用卡、RFID 卡或其他类似物品的后置插袋或卡片夹。否则卡片可能会损坏和/或影响无线充电性能。

5.2 声学 [英语]

保护壳不应损害设备的声学性能或导致这一性能下降。

5.2.1 通话质量 [英语]

在用户通过蜂窝网络拨打和接听语音电话，或者使用 FaceTime 通话进行音频/视频通话时，无论是使用耳机模式还是免提模式，保护壳都不应损害或降低用户体验。保护壳不应改变扬声器或麦克风的频率响应。此外，使用保护壳不应导致出现任何声音失真或回声。

保护壳在通话过程中不应阻挡任何麦克风。挡住麦克风会导致通话质量下降。

2023/10/10 | 版权所有 © 2023 Apple Inc. 保留所有权利。

5.2.2 扬声器至麦克风的耦合 [英语]

保护壳不应加剧从任何扬声器到任何麦克风的声音传导。这种声音传导可能导致手机通话时出现回声。

5.2.3 扬声器/麦克风开口 [英语]

设备的扬声器/麦克风端口位置因型号而异，详见“设备尺寸图（第 232 页）”。

5.2.3.1 薄保护壳 (≤ 2.25 mm) [英语]

薄保护壳的麦克风/扬声器开口应当：

- 与所有设备扬声器/麦克风端口边缘至少相距 2.0 mm。
- 内径厚度不超过 1.5 mm。
- 相对于内径的入射角不超过 45°。
- 与设备的扬声器/麦克风端口之间保持适当的密封。

图 5-4 薄保护壳的麦克风/扬声器开口建议

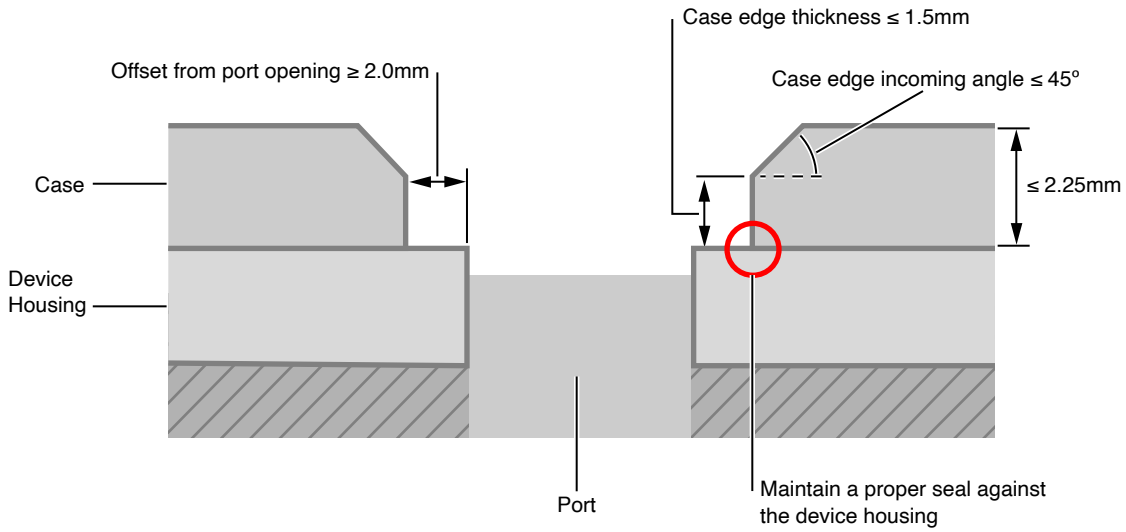

5.2.3.2 厚保护壳 (>2.25 mm) [英语]

扬声器和麦克风开口应当相互独立，并且与厚保护壳的外表面保持连续接合。

图 5-5 厚保护壳声道

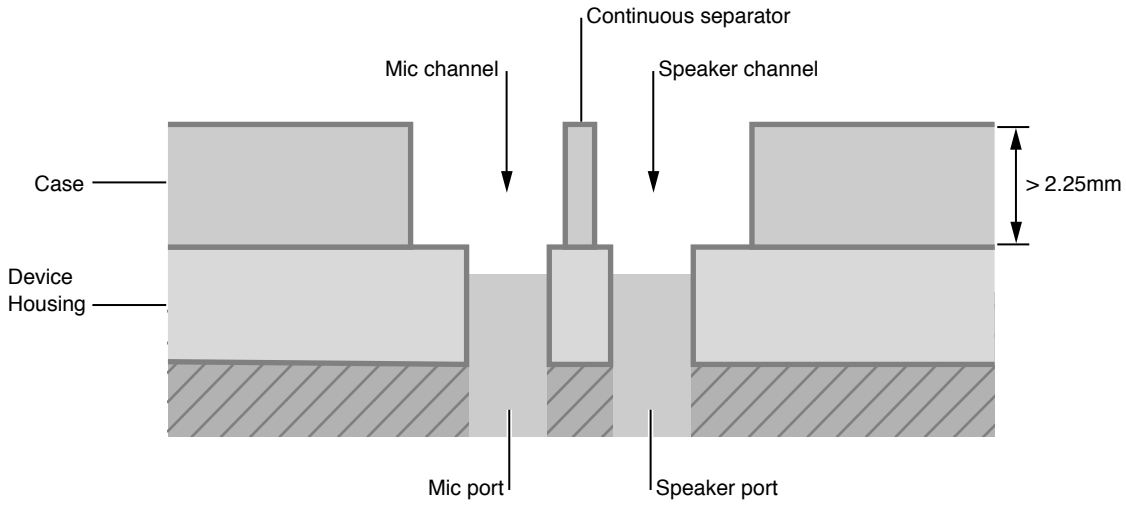

厚保护壳应当最大限度地增加扬声器和麦克风声道之间的出口间距。

图 5-6 厚保护壳麦克风和扬声器出口间距

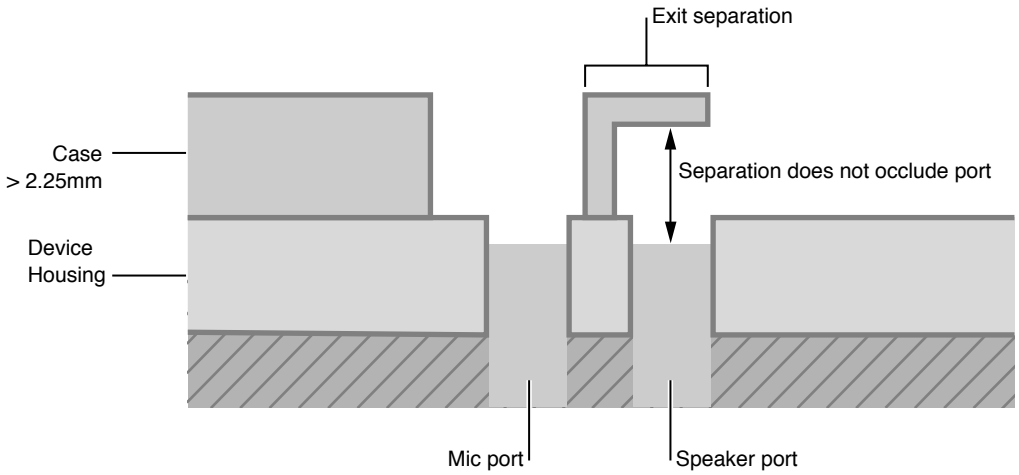

厚保护壳的声道可用作共振腔并降低麦克风/扬声器频率响应。所产生的频率响应可能会因声道尺寸/形状而异。

如果厚保护壳不能在设备的麦克风/扬声器声道之间保持适当的密封，保护壳自身可能会变成一个声腔。

2023/10/10 | 版权所有 © 2023 Apple Inc. 保留所有权利。

图 5-7　厚保护壳密封不当

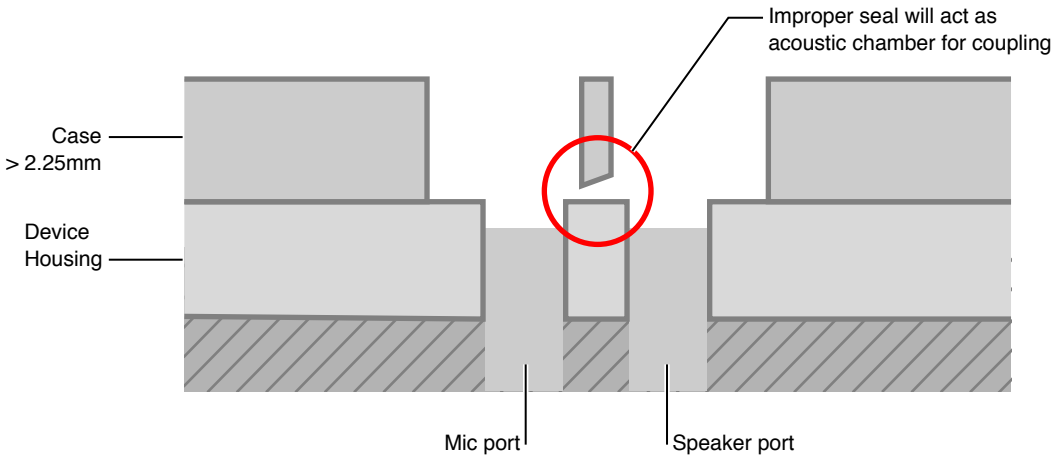

5.3 环境光传感器和距离感应器 [英语]

各设备的环境光传感器和距离感应器位置如“设备尺寸图（第 232 页）”中所示。其中部分尺寸图指定了这些传感器周围的避开区域。

5.4 触感引擎 [英语]

保护壳不应导致设备触感引擎产生的触感发生显著变化。

以下设备配备触感引擎：

- iPhone 15 Pro Max
- iPhone 15 Pro
- iPhone 15 Plus
- iPhone 15
- iPhone 14 Pro Max
- iPhone 14 Pro
- iPhone 14 Plus
- iPhone 14
- iPhone SE（第 3 代）
- iPhone 13 Pro Max
- iPhone 13 Pro
- iPhone 13
- iPhone 13 mini
- iPhone 12 Pro Max

2023/10/10 | 版权所有 © 2023 Apple Inc. 保留所有权利。

- iPhone 12 Pro
- iPhone 12
- iPhone 12 mini
- iPhone SE（第 2 代）
- iPhone 11 Pro Max
- iPhone 11 Pro
- iPhone 11
- iPhone XS Max
- iPhone XS
- iPhone XR
- iPhone X
- iPhone 8 Plus
- iPhone 8
- iPhone 7 Plus
- iPhone 7
- iPhone 6s Plus
- iPhone 6s

5.5 磁场干扰 [英语]

保护壳不应干扰设备的以下功能：

- 磁罗盘。
- 后置摄像头自动对焦 (AF)。
- 后置摄像头光学图像防抖 (OIS)（若有）。
- 前置摄像头自动对焦（若有）。

有关其他详细信息，请参阅“磁场干扰（第 26 页）”。

5.6 触控 ID [英语]

配件不应妨碍使用设备的触控ID传感器。设备的触控ID传感器避开区域可在“设备尺寸图（第232页）”中找到。

保护壳如果覆盖传感器，可能会导致用户难以使用触控 ID。

2023/10/10 | 版权所有 © 2023 Apple Inc. 保留所有权利。

5.7 摄像头 [英语]

摄像头视野 (FOV) 和闪光灯提供的照度都是针对每种设备摄像头而设计的。制造商必须认真查阅每种设备的“设备尺寸图（第 232 页）”，而不能假设参数在不同设备上都相同。

保护壳的几何形状、颜色和表面处理都可能会影响摄像头所拍摄的图像。

注：
Apple 建议在摄像头和闪光灯开口周围采用黑色半光材料或涂层。

5.7.1 几何形状 [英语]

不应遮挡摄像头镜头视野。如果摄像头和闪光灯附近的开口太小，可能会遮挡镜头视野和闪光灯的照明。遮挡视野可能导致图像中出现光晕，造成图像一个或多个边角的颜色比中心的颜色更深。遮挡镜头视野外侧的边缘光线也可能会导致图像的清晰度和对比度下降。遮挡闪光灯照明可能会导致图像出现阴霾，进而造成对比度下降。如需了解摄像头避开区域，请参见“设备尺寸图（第 232 页）”。

保护壳开口在设计上不应让散射光进入摄像头镜头。如果开口过窄或过陡，可能会将光线反射到摄像头镜头内，导致图像颜色变浅或增加色偏。在摄像头附近的开口处增加斜面，可以帮助避免散射光进入摄像头镜头。如果设备包含闪光灯，过窄或过陡的开口可能会将光线从摄像头和闪光灯开口反射回摄像头镜头。这可能导致图像变得模糊或造成伪影。设计人员还应当确保遵循“设备尺寸图（第 232 页）”中概述的机械避开区域并提供最坏情况下的 X-Y 坐标位置偏差，以便将出现阴霾的可能性降到最低。

5.7.2 颜色 [英语]

从保护壳反射的光线可能带有保护壳的颜色。黑色材料或黑色涂层可以帮助避免颜色渗入到摄像头镜头。颜色越深，来自闪光灯或外部光源的光线从保护壳反射到摄像头镜头的可能性就越小。

5.7.3 表面处理 [英语]

半光材料可以帮助避免反射光线进入摄像头镜头。哑光或漫射材料会向各个方向散射光，增加了来自闪光灯或强外部光源的光线被反射到摄像头镜头中的可能性。

2023/10/10 | 版权所有 © 2023 Apple Inc. 保留所有权利。

5.7.4 图像质量下降示例 [英语]

图 5-8 周围环境中图像遮挡导致的图像质量下降示例

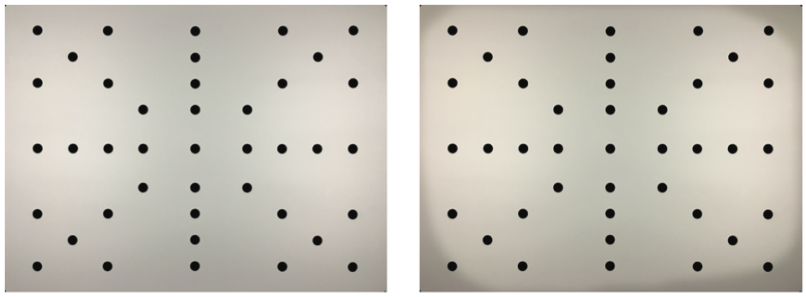

图 5-9 重彩配件所产生色移导致的图像质量下降示例

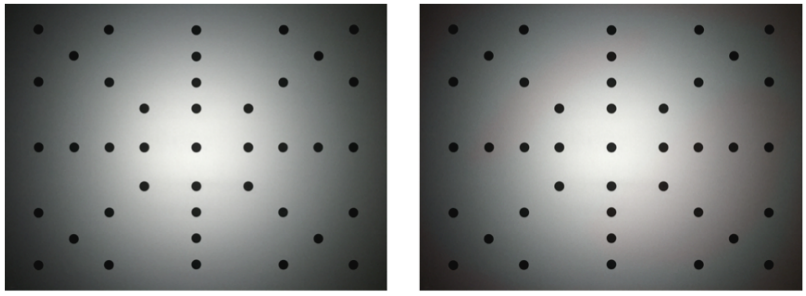

图 5-10 闪光灯干扰导致的图像质量下降示例

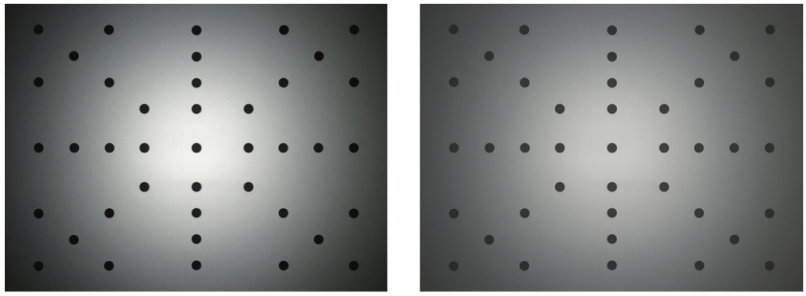

5.8 可靠性 [英语]

保护壳应该经过测试，确认能够在典型使用条件下长期使用，并且不会损害设备的功能或导致性能下降，不会损害设备或周围环境，也不会给用户造成负面影响。

5.8.1 设备插入和取出 [英语]

保护壳应该能牢牢固定设备，同时便于插入和取出设备。在各种环境中具有代表性的长期使用条件下，应当能够反复地将设备插入保护壳和从中取出，保护壳不应对设备造成刮伤和损坏（第 25 页）。

5.8.2 色牢度 [英语]

保护壳内外使用的染色剂、油墨或涂层不应出现褪色而沾染到设备或用户身上，尤其是在保护壳接触到水或防晒乳等常见物质时。

5.9 环境 [英语]

保护壳应该遵守此类配件销售所在地的适用环保法规以及适用的物质或材料限制，包括：

- 有机锡化合物、全氟辛烷磺酸 (PFOS)、全氟辛酸 (PFOA)、邻苯二甲酸盐、偶氮染料、多溴化联苯 (PBB) 和多环芳烃 (PAH)（根据欧盟 REACh 法规 EC 1907/2006 的要求）。
- 表面上长时间接触皮肤的镍浸出率（根据欧盟 REACh 法规 EC 1907/2006 的要求）。
- 镉、铅、六价铬和镍（根据欧盟指令 2009/48/EC 的要求）。
- 天然胶乳（根据欧盟指令 EC 93/42/EEC 的要求）。
- 富马酸二甲酯 (DMFu)（根据欧盟法规 412/2012 的要求）。
- pH 值和甲醛（根据中国纺织品强制性要求 GB 18401 和中国皮革强制性要求 GB 20400）。
- 产品或包装中的濒危动植物用料（美国雷斯法案）。
- 多溴联苯醚 (PBDE)。
- 如果适用的话，遵守加州 65 号提案中的规定。

5.10 测试规程 [英语]

5.10.1 设备型号 [英语]

根据适用的设备，保护壳测试规程会有所不同。

5.10.1.1 iPhone 15 Pro Max [英语]

表格 5-1 iPhone 15 Pro Max 保护壳测试矩阵

测试	使用	备注
产品设计（第 55 页）	iPhone 15 Pro Max	
MagSafe 保护壳磁铁阵列（第 154 页）	iPhone 15 Pro Max	仅支持 MagSafe 的保护壳。
触感引擎（第 58 页）	iPhone 15 Pro Max	

测试	使用	备注
声学（第 61 页）	iPhone 15 Pro Max	

5.10.1.2 iPhone 15 Pro [英语]

表格 5-2 iPhone 15 Pro 保护壳测试矩阵

测试	使用	备注
产品设计（第 55 页）	iPhone 15 Pro	
MagSafe 保护壳磁铁阵列（第 154 页）	iPhone 15 Pro	仅支持 MagSafe 的保护壳。
触感引擎（第 58 页）	iPhone 15 Pro	
声学（第 61 页）	iPhone 15 Pro	

5.10.1.3 iPhone 15 Plus [英语]

表格 5-3 iPhone 15 Plus 保护壳测试矩阵

测试	使用	备注
产品设计（第 55 页）	iPhone 15 Plus	
MagSafe 保护壳磁铁阵列（第 154 页）	iPhone 15 Plus	仅支持 MagSafe 的保护壳。
触感引擎（第 58 页）	iPhone 15 Plus	
声学（第 61 页）	iPhone 15 Plus	

5.10.1.4 iPhone 15 [英语]

表格 5-4 iPhone 15 保护壳测试矩阵

测试	使用	备注
产品设计（第 55 页）	iPhone 15	
MagSafe 保护壳磁铁阵列（第 154 页）	iPhone 15	仅支持 MagSafe 的保护壳。
触感引擎（第 58 页）	iPhone 15	
声学（第 61 页）	iPhone 15	

5.10.1.5 iPhone 14 Pro Max [英语]

表格 5-5 iPhone 14 Pro Max 保护壳测试矩阵

测试	使用	备注
产品设计（第 55 页）	iPhone 14 Pro Max	
MagSafe 保护壳磁铁阵列（第 154 页）	iPhone 14 Pro Max	仅支持 MagSafe 的保护壳。

测试	使用	备注
触感引擎（第 58 页）	iPhone 14 Pro Max	
声学（第 61 页）	iPhone 14 Pro Max	

5.10.1.6 iPhone 14 Pro [英语]

表格 5-6 iPhone 14 Pro 保护壳测试矩阵

测试	使用	备注
产品设计（第 55 页）	iPhone 14 Pro	
MagSafe 保护壳磁铁阵列（第 154 页）	iPhone 14 Pro	仅支持 MagSafe 的保护壳。
触感引擎（第 58 页）	iPhone 14 Pro	
声学（第 61 页）	iPhone 14 Pro	

5.10.1.7 iPhone 14 Plus [英语]

表格 5-7 iPhone 14 Plus 保护壳测试矩阵

测试	使用	备注
产品设计（第 55 页）	iPhone 14 Plus	
MagSafe 保护壳磁铁阵列（第 154 页）	iPhone 14 Plus	仅支持 MagSafe 的保护壳。
触感引擎（第 58 页）	iPhone 14 Plus	
声学（第 61 页）	iPhone 14 Plus	

5.10.1.8 iPhone 14 [英语]

表格 5-8 iPhone 14 保护壳测试矩阵

测试	使用	备注
产品设计（第 55 页）	iPhone 14	
MagSafe 保护壳磁铁阵列（第 154 页）	iPhone 14	仅支持 MagSafe 的保护壳。
触感引擎（第 58 页）	iPhone 14	
声学（第 61 页）	iPhone 14	

5.10.1.9 iPhone 13 Pro Max [英语]

表格 5-9 iPhone 13 Pro Max 保护壳测试矩阵

测试	使用	备注
产品设计（第 55 页）	iPhone 13 Pro Max	

2023/10/10 | 版权所有 © 2023 Apple Inc. 保留所有权利。

测试	使用	备注
MagSafe 保护壳磁铁阵列（第 154 页）	iPhone 13 Pro Max	仅支持 MagSafe 的保护壳。
触感引擎（第 58 页）	iPhone 13 Pro Max	
声学（第 61 页）	iPhone 13 Pro Max	

5.10.1.10 iPhone 13 Pro [英语]

表格 5-10 iPhone 13 Pro 保护壳测试矩阵

测试	使用	备注
产品设计（第 55 页）	iPhone 13 Pro	
MagSafe 保护壳磁铁阵列（第 154 页）	iPhone 13 Pro	仅支持 MagSafe 的保护壳。
触感引擎（第 58 页）	iPhone 13 Pro	
声学（第 61 页）	iPhone 13 Pro	

5.10.1.11 iPhone 13 [英语]

表格 5-11 iPhone 13 保护壳测试矩阵

测试	使用	备注
产品设计（第 55 页）	iPhone 13	
MagSafe 保护壳磁铁阵列（第 154 页）	iPhone 13	仅支持 MagSafe 的保护壳。
触感引擎（第 58 页）	iPhone 13	
声学（第 61 页）	iPhone 13	

5.10.1.12 iPhone 13 mini [英语]

表格 5-12 iPhone 13 mini 保护壳测试矩阵

测试	使用	备注
产品设计（第 55 页）	iPhone 13 mini	
MagSafe 保护壳磁铁阵列（第 154 页）	iPhone 13 mini	仅支持 MagSafe 的保护壳。
触感引擎（第 58 页）	iPhone 13 mini	
声学（第 61 页）	iPhone 13 mini	

5.10.1.13 iPhone 12 Pro Max [英语]

表格 5-13 iPhone 12 Pro Max 保护壳测试矩阵

测试	使用	备注
产品设计（第 55 页）	iPhone 12 Pro Max	
MagSafe 保护壳磁铁阵列（第 154 页）	iPhone 12 Pro Max	仅支持 MagSafe 的保护壳。
触感引擎（第 58 页）	iPhone 12 Pro Max	
声学（第 61 页）	iPhone 12 Pro Max	

5.10.1.14 iPhone 12 Pro [英语]

表格 5-14 iPhone 12 Pro 保护壳测试矩阵

测试	使用	备注
产品设计（第 55 页）	iPhone 12 Pro	
MagSafe 保护壳磁铁阵列（第 154 页）	iPhone 12 Pro	仅支持 MagSafe 的保护壳。
触感引擎（第 58 页）	iPhone 12 Pro	
声学（第 61 页）	iPhone 12 Pro	

5.10.1.15 iPhone 12 [英语]

表格 5-15 iPhone 12 保护壳测试矩阵

测试	使用	备注
产品设计（第 55 页）	iPhone 12	
MagSafe 保护壳磁铁阵列（第 154 页）	iPhone 12	仅支持 MagSafe 的保护壳。
触感引擎（第 58 页）	iPhone 12	
声学（第 61 页）	iPhone 12	

5.10.1.16 iPhone 12 mini [英语]

表格 5-16 iPhone 12 mini 保护壳测试矩阵

测试	使用	备注
产品设计（第 55 页）	iPhone 12 mini	
MagSafe 保护壳磁铁阵列（第 154 页）	iPhone 12 mini	仅支持 MagSafe 的保护壳。
触感引擎（第 58 页）	iPhone 12 mini	
声学（第 61 页）	iPhone 12 mini	

2023/10/10 | 版权所有 © 2023 Apple Inc. 保留所有权利。

5.10.1.17 iPhone 11 Pro Max [英语]

表格 5-17 iPhone 11 Pro Max 保护壳测试矩阵

测试	使用	备注
产品设计（第 55 页）	iPhone 11 Pro Max	
触感引擎（第 58 页）	iPhone 11 Pro Max	
声学（第 61 页）	iPhone 11 Pro Max	

5.10.1.18 iPhone 11 Pro [英语]

表格 5-18 iPhone 11 Pro 保护壳测试矩阵

测试	使用	备注
产品设计（第 55 页）	iPhone 11 Pro	
触感引擎（第 58 页）	iPhone 11 Pro	
声学（第 61 页）	iPhone 11 Pro	

5.10.1.19 iPhone 11 [英语]

表格 5-19 iPhone 11 保护壳测试矩阵

测试	使用	备注
产品设计（第 55 页）	iPhone 11	
触感引擎（第 58 页）	iPhone 11	
声学（第 61 页）	iPhone 11	

5.10.1.20 iPhone XS Max [英语]

表格 5-20 iPhone XS Max 保护壳测试矩阵

测试	使用	备注
产品设计（第 55 页）	iPhone XS Max	
触感引擎（第 58 页）	iPhone XS Max	
声学（第 61 页）	iPhone XS Max	

2023/10/10 | 版权所有 © 2023 Apple Inc. 保留所有权利。

5.10.1.21 iPhone XS [英语]

表格 5-21 iPhone XS 保护壳测试矩阵

测试	使用	备注
产品设计（第 55 页）	iPhone XS	
触感引擎（第 58 页）	iPhone XS	
声学（第 61 页）	iPhone XS	

5.10.1.22 iPhone XR [英语]

表格 5-22 iPhone XR 保护壳测试矩阵

测试	使用	备注
产品设计（第 55 页）	iPhone XR	
触感引擎（第 58 页）	iPhone XR	
声学（第 61 页）	iPhone XR	

5.10.1.23 iPhone X [英语]

表格 5-23 iPhone X 保护壳测试矩阵

测试	使用	备注
产品设计（第 55 页）	iPhone X	
触感引擎（第 58 页）	iPhone X	
声学（第 61 页）	iPhone X	

5.10.1.24 iPhone 8 Plus/iPhone 7 Plus [英语]

表格 5-24 iPhone 8 Plus/iPhone 7 Plus 保护壳测试矩阵

测试	使用	备注
产品设计（第 55 页）	iPhone 8 Plus 和 iPhone 7 Plus	
触感引擎（第 58 页）	iPhone 8 Plus 和 iPhone 7 Plus	
触控 ID 传感器覆膜（第 58 页）	iPhone 8 Plus 和 iPhone 7 Plus	
声学（第 61 页）	iPhone 8 Plus 和 iPhone 7 Plus	

保护壳不能声称仅兼容 iPhone 8 Plus 或 iPhone 7 Plus。

5.10.1.25 iPhone SE（第 3 代）/iPhone SE（第 2 代）/iPhone 8/iPhone 7 [英语]

表格 5-25 iPhone SE（第 3 代）/iPhone SE（第 2 代）/iPhone 8/iPhone 7 保护壳测试矩阵

测试	使用	备注
产品设计（第 55 页）	iPhone SE（第 3 代）、iPhone SE（第 2 代）、iPhone 8 和 iPhone 7	
触感引擎（第 58 页）	iPhone SE（第 3 代）、iPhone SE（第 2 代）、iPhone 8 和 iPhone 7	
触控 ID 传感器覆膜（第 58 页）	iPhone SE（第 3 代）、iPhone SE（第 2 代）、iPhone 8 和 iPhone 7	
声学（第 61 页）	iPhone SE（第 3 代）、iPhone SE（第 2 代）、iPhone 8 和 iPhone 7	

保护壳不能声称仅兼容 iPhone SE（第 3 代）、iPhone SE（第 2 代）、iPhone 8 或 iPhone 7。

5.10.1.26 iPhone 6s Plus/iPhone 6 Plus [英语]

表格 5-26 iPhone 6s Plus/iPhone 6 Plus 保护壳测试矩阵

测试	使用	备注
产品设计（第 55 页）	iPhone 6s Plus 和 iPhone 6 Plus	
触感引擎（第 58 页）	iPhone 6s Plus	

保护壳不能声称仅兼容 iPhone 6s Plus 或 iPhone 6 Plus。

5.10.1.27 iPhone 6s/iPhone 6 [英语]

表格 5-27 iPhone 6s/iPhone 6 保护壳测试矩阵

测试	使用	备注
产品设计（第 55 页）	iPhone 6s 和 iPhone 6	
触感引擎（第 58 页）	iPhone 6s	

保护壳不能声称仅兼容 iPhone 6s 或 iPhone 6。

5.10.1.28 iPhone 5/iPhone 5s/iPhone SE [英语]

表格 5-28 iPhone 5/iPhone 5s/iPhone SE 保护壳测试矩阵

测试	使用	备注
产品设计（第 55 页）	iPhone SE	

保护壳不能声称仅兼容 iPhone 5、iPhone 5s 或 iPhone SE。

5.10.1.29 iPhone 5c [英语]

表格 5-29 iPhone 5c 保护壳测试矩阵

测试	使用	备注
产品设计（第 55 页）	iPhone 5c	

5.10.1.30 12.9 英寸 iPad Pro（第 6 代）和 12.9 英寸 iPad Pro（第 5 代） [英语]

表格 5-30 12.9 英寸 iPad Pro（第 6 代）和 12.9 英寸 iPad Pro（第 5 代）保护壳测试矩阵

测试	使用	备注
产品设计（第 55 页）	12.9 英寸 iPad Pro（第 6 代）	

保护壳不能声称仅兼容 12.9 英寸 iPad Pro（第 6 代）或 12.9 英寸 iPad Pro（第 5 代）。

5.10.1.31 11 英寸 iPad Pro（第 4 代）和 11 英寸 iPad Pro（第 3 代） [英语]

表格 5-31 11 英寸 iPad Pro（第 4 代）和 11 英寸 iPad Pro（第 3 代）保护壳测试矩阵

测试	使用	备注
产品设计（第 55 页）	11 英寸 iPad Pro（第 4 代）	

保护壳不能声称仅兼容 11 英寸 iPad Pro（第 4 代）或 11 英寸 iPad Pro（第 3 代）。

5.10.1.32 iPad（第 10 代） [英语]

表格 5-32 iPad（第 10 代）保护壳测试矩阵

测试	使用	备注
产品设计（第 55 页）	iPad（第 10 代）	

5.10.1.33 iPad mini（第 6 代） [英语]

表格 5-33 iPad mini（第 6 代）保护壳测试矩阵

测试	使用	备注
产品设计（第 55 页）	iPad mini（第 6 代）	

5.10.1.34 iPad（第 7 代）/iPad（第 8 代）/iPad（第 9 代） [英语]

表格 5-34 iPad（第 7 代）/iPad（第 8 代）/iPad（第 9 代）保护壳测试矩阵

测试	使用	备注
产品设计（第 55 页）	iPad（第 7 代）、iPad（第 8 代）和 iPad（第 9 代）	

保护壳不能声称仅兼容 iPad（第 7 代）、iPad（第 8 代）或 iPad（第 9 代）。

5.10.1.35 iPad Air（第 5 代）/iPad Air（第 4 代） [英语]

表格 5-35 iPad Air（第 5 代）/iPad Air（第 4 代）保护壳测试矩阵

测试	使用	备注
产品设计（第 55 页）	iPad Air（第 5 代）	

5.10.1.36 12.9 英寸 iPad Pro（第 4 代） [英语]

表格 5-36 12.9 英寸 iPad Pro（第 4 代）保护壳测试矩阵

测试	使用	备注
产品设计（第 55 页）	12.9 英寸 iPad Pro（第 4 代）	

5.10.1.37 11 英寸 iPad Pro（第 2 代） [英语]

表格 5-37 11 英寸 iPad Pro（第 2 代）保护壳测试矩阵

测试	使用	备注
产品设计（第 55 页）	11 英寸 iPad Pro（第 2 代）	

5.10.1.38 iPad Air（第 3 代） [英语]

表格 5-38 iPad Air（第 3 代）保护壳测试矩阵

测试	使用	备注
产品设计（第 55 页）	iPad Air（第 3 代）	

5.10.1.39 iPad mini（第 5 代） [英语]

表格 5-39 iPad mini（第 5 代）保护壳测试矩阵

测试	使用	备注
产品设计（第 55 页）	iPad mini（第 5 代）	

5.10.1.40 12.9 英寸 iPad Pro（第 3 代） [英语]

表格 5-40 12.9 英寸 iPad Pro（第 3 代）保护壳测试矩阵

测试	使用	备注
产品设计（第 55 页）	12.9 英寸 iPad Pro（第 3 代）	

5.10.1.41 11 英寸 iPad Pro（第 1 代） [英语]

表格 5-41 11 英寸 iPad Pro（第 1 代）保护壳测试矩阵

测试	使用	备注
产品设计（第 55 页）	11 英寸 iPad Pro（第 1 代）	

5.10.1.42 10.5 英寸 iPad Pro [英语]

表格 5-42 10.5 英寸 iPad Pro 保护壳测试矩阵

测试	使用	备注
产品设计（第 55 页）	10.5 英寸 iPad Pro	

5.10.1.43 12.9 英寸 iPad Pro（第 2 代） [英语]

表格 5-43 12.9 英寸 iPad Pro（第 2 代）保护壳测试矩阵

测试	使用	备注
产品设计（第 55 页）	12.9 英寸 iPad Pro（第 2 代）	

版权所有 © 2023 Apple Inc. 保留所有权利。

5.10.1.44 iPad（第 5 代和第 6 代） [英语]

表格 5-44 iPad（第 5 代和第 6 代）保护壳测试矩阵

测试	使用	备注
产品设计（第 55 页）	iPad（第 5 代）或 iPad（第 6 代）	

5.10.1.45 9.7 英寸 iPad Pro [英语]

表格 5-45 9.7 英寸 iPad Pro 保护壳测试矩阵

测试	使用	备注
产品设计（第 55 页）	9.7 英寸 iPad Pro	

5.10.1.46 12.9 英寸 iPad Pro（第 1 代） [英语]

表格 5-46 12.9 英寸 iPad Pro（第 1 代）保护壳测试矩阵

测试	使用	备注
产品设计（第 55 页）	12.9 英寸 iPad Pro（第 1 代）	

5.10.1.47 iPad mini 4 [英语]

表格 5-47 iPad mini 4 保护壳测试矩阵

测试	使用	备注
产品设计（第 55 页）	iPad mini 4	

5.10.1.48 iPad mini/iPad mini 2/iPad mini 3 [英语]

表格 5-48 iPad mini/iPad mini 2/iPad mini 3 保护壳测试矩阵

测试	使用	备注
产品设计（第 55 页）	iPad mini 3	

保护壳不能声称仅兼容 iPad mini、iPad mini 2 或 iPad mini 3。

2023/10/10 | 版权所有 © 2023 Apple Inc. 保留所有权利。

5.10.1.49 iPad Air 2 [英语]

表格 5-49 iPad Air 2 保护壳测试矩阵

测试	使用	备注
产品设计（第 55 页）	iPad Air 2	

5.10.1.50 iPad Air [英语]

表格 5-50 iPad Air 保护壳测试矩阵

测试	使用	备注
产品设计（第 55 页）	iPad Air	

5.10.1.51 iPad（第 4 代） [英语]

表格 5-51 iPad（第 4 代）保护壳测试矩阵

测试	使用	备注
产品设计（第 55 页）	iPad（第 4 代）	

5.10.1.52 iPod touch（第 5 代）/iPod touch（第 6 代）/iPod touch（第 7 代） [英语]

表格 5-52 iPod touch（第 5 代）/iPod touch（第 6 代）/iPod touch（第 7 代）保护壳测试矩阵

测试	使用	备注
产品设计（第 55 页）	iPod touch（第 7 代）	

保护壳不能声称仅兼容 iPod touch（第 5 代）、iPod touch（第 6 代）或 iPod touch（第 7 代）。

5.10.2 产品设计 [英语]

5.10.2.1 器材 [英语]

- 设备
- Apple 闪电数字影音转换器，适用于带有闪电插口的设备。
- Apple USB-C 数字影音多端口转换器，适用于带有 USB-C 插口的设备。
- 具有 3.5 mm 耳机插头的 EarPods，适用于带有 3.5 mm 耳机插孔的设备。
- 游标卡尺
- 0.85 mm 塑料测隙规

5.10.2.2 规程 [英语]

1. 将设备插入保护壳中。
2. 验证设备是不是与保护壳完全贴合。
3. 确认设备无松动。
4. 验证可不可以操作所有按钮。
5. 检查按钮手感。确认所有按钮既不能很难按到，也不应需要大力按压。
6. 确认扬声器/麦克风端口没有被挡住。
7. 如果设备带有 Apple 闪电插口：
   a. 将 Apple 闪电数字影音转换器插入插口并验证是不是契合。
   b. 用游标卡尺测量保护壳上的闪电接口开口。验证开口是不是不小于 12.05 mm x 6.30 mm。
8. 如果设备带有 USB-C 插口：
   a. 将 Apple USB-C 数字影音多端口转换器插入插口并验证是不是契合。
   b. 用游标卡尺测量保护壳上的 USB-C 接口开口。验证开口是不是不小于 12.35 mm x 6.50 mm。
9. 如果设备带有 3.5 mm 耳机插孔：
   a. 将具有 3.5 mm 耳机插头的 EarPods 插入耳机插孔中并验证是不是契合。
   b. 用游标卡尺测量保护壳上的耳机插孔开口。验证开口直径是不是不小于 6 mm 且深度不超过 14 mm。
10. 如果设备带有与主屏幕按钮集成的触控 ID 传感器，请使用游标卡尺来验证保护壳与触控 ID 传感器的间距是不是不小于 2 mm。
11. 如果设备带有与睡眠/唤醒按钮集成的触控 ID 传感器，请使用游标卡尺来验证保护壳是不是符合其声称兼容的每个设备所定义的避开区域。请参见“设备尺寸图（第 232 页）”。

版权所有 © 2023 Apple Inc. 保留所有权利。

12. 在设备各个角落放置测隙规时，验证保护壳是不是始终与测隙规保持平整。请参见图 5-11（第 57 页）。

图 5-11 设备平整度测试

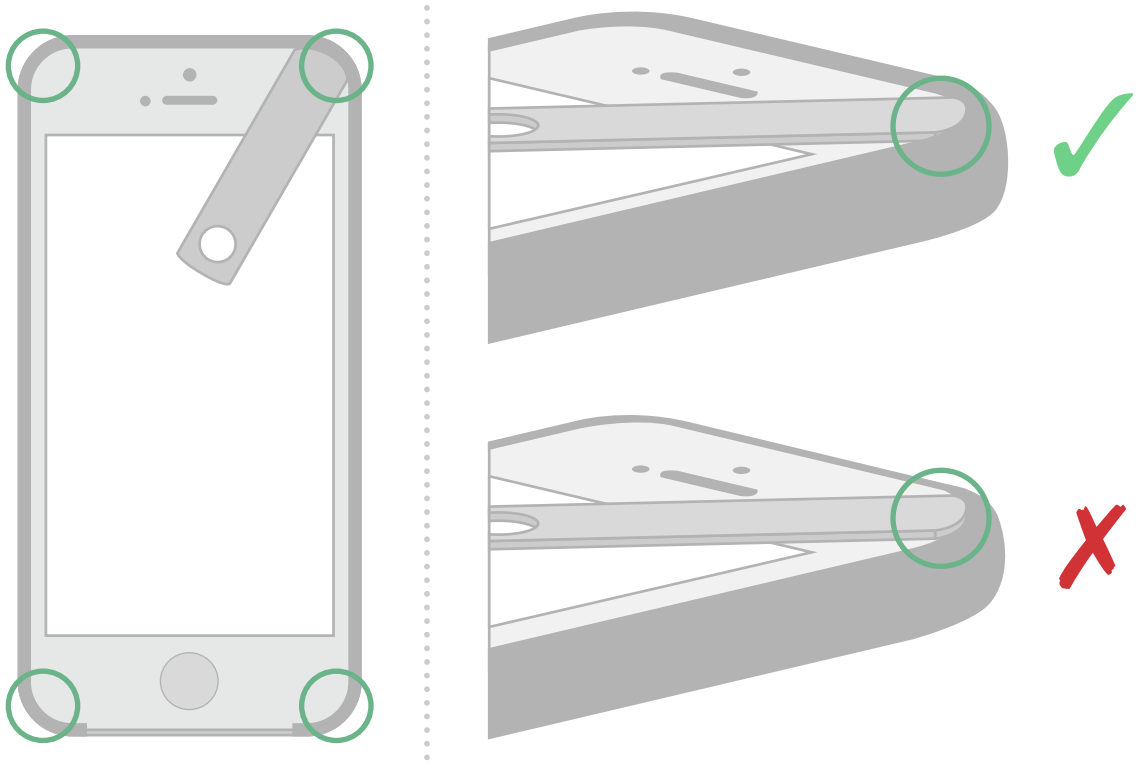

13. 将设备平放（屏幕朝下）。
14. 将设备朝着保护壳未包覆的任何一侧推送，直到设备的外露玻璃与平整表面之间的空隙最小为止。
15. 验证测隙规能不能放入设备的外露玻璃与平整表面之间的空隙。

图 5-12 设备空隙测试

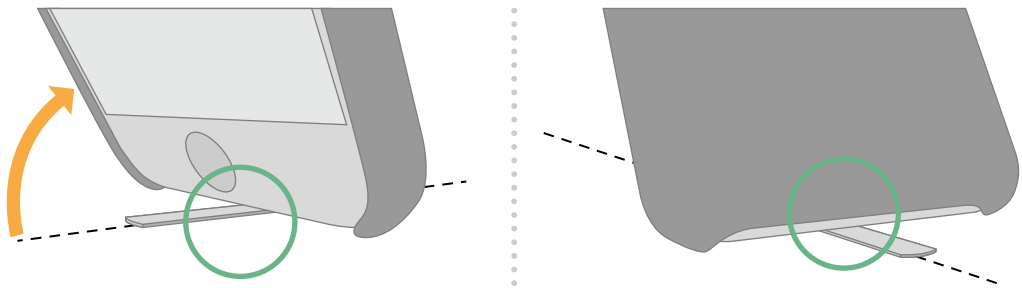

16. 如果保护壳带有覆膜，请验证覆膜与触摸屏之间是不是未引入任何气隙。

2023/10/10 | 版权所有 © 2023 Apple Inc. 保留所有权利。

5.10.3 触感引擎 [英语]

5.10.3.1 器材 [英语]

- 两个相同型号的设备：A 和 B
- 桌子

5.10.3.2 规程 [英语]

1. 将保护壳装到设备 B 上。
2. 将设备 A 放在桌子上。
3. 将设备 B 紧靠着设备 A 放在桌子上。
4. 在以下每项任务中，比较设备 A 和设备 B 的触感引擎反馈：
   a. 前往“设置”>“声音与触感”，将“响铃模式下提供触感反馈”和“静音模式下提供触感反馈”设置到打开位置。
   b. 关闭响铃/静音开关再打开，或使用操作按钮。
   c. 连接充电器，等待几秒钟，然后断开充电器。
   d. 前往“设置”>“通知”>“电话”>“声音”，再选择“倒影（默认）”。
   e. 前往“设置”>“通知”>“信息”->“声音”，再选择“音符（默认）”。
   f. 前往主屏幕。
   g. 长按“设置”App 以显示“快速操作”菜单，然后用手指在菜单上滑动，并在选择“无线局域网”时松开。
   h. 前往主屏幕。
   i. 长按“家庭”App 以显示“快速操作”菜单。松开手指，然后轻点菜单之外的区域以返回主屏幕。
   j. 前往“时钟”App，再选择“计时器”（右下角）。
   k. 滚动选择小时和分钟。
5. 如果设备带有主屏幕按钮：
   a. 前往“设置”>“通用”>“主屏幕按钮”，再选择选项 2。
   b. 按下主屏幕按钮。
6. 左手握持设备 A，右手握持设备 B，并重复上述任务。

5.10.3.3 合格/不合格判断标准 [英语]

保护壳不会导致设备触感引擎产生的触感发生显著变化。

5.10.4 触控 ID 传感器覆膜 [英语]

这一测试规程适用于覆盖触控 ID 传感器的配件。

5.10.4.1 器材 [英语]

- 丁腈手套（如 Ansell TNT Blue）

- 乙醇洗手液（如 Purell）
- 剪刀

5.10.4.2 规程 [英语]

1. 从丁腈手套的手腕部分剪下一块正方形的面料。
2. 将配件装到设备上。
3. 按下睡眠/唤醒按钮或侧边按钮，将设备置于睡眠状态（显示屏关闭）。
4. 将剪下的丁腈手套面料放在触控 ID 传感器上，使手套的外侧背对设备。
5. 给触控 ID 传感器上的手套上涂抹少量洗手液（直径大约 2 cm）。
6. 重复以下步骤 10 次：
   a. 用拇指按下触控 ID 传感器。
   b. 验证设备会不会被唤醒（显示屏打开）。
   c. 将设备置于睡眠状态（显示屏关闭）。
7. 重复以下步骤 10 次：
   a. 用食指按下触控 ID 传感器。
   b. 验证设备会不会被唤醒（显示屏打开）。
   c. 将设备置于睡眠状态（显示屏关闭）。

5.10.4.3 合格/不合格判断标准 [英语]

确认每次按下触控 ID 传感器时，设备都能被唤醒。

5.10.5 摄像头 [英语]

5.10.5.1 自动对焦和光学图像防抖 [英语]

这项测试适用于配备自动对焦 (AF) 和/或光学图像防抖 (OIS) 功能的设备。

5.10.5.1.1 器材 [英语]

- 运行 iOS 17.0 或更高版本或 iPadOS 17.0 或更高版本的设备。请参见“设备型号（第 43 页）”。
- 远离磁场且平坦、水平的非铁测试表面。
- Accessory Developer Assistant (ADA)（第 230 页）。
- 自动对焦和光学图像防抖测试描述文件（第 230 页）。

5.10.5.1.2 规程 [英语]

1. 启动 Accessory Developer Assistant App 并登录。
2. 选择“Case”（保护壳）、“Autofocus”（自动化对焦）和“Optical Image Stabilization”（光学图像防抖）。

3. 如果出现提示，请允许 ADA 访问设备摄像头。
4. 将设备放到测试表面上。
5. 按照屏幕上的说明操作。
6. 选择“Measure Baseline”（测量基准），然后等待完成测量。
7. 将要测试的保护壳安装到设备上。
8. 将设备放回到测试表面上。
9. 选择“Measure Attached”（测量已安装），然后等待完成测量。
10. 验证所有测试是否都通过，并记下结果。

5.10.6 指南针 [英语]

5.10.6.1 器材 [英语]

需要以下器材：

- 运行 iPadOS 17.0 或更高版本的设备。
- Accessory Developer Assistant (ADA)（第 230 页）。
- 远离磁场且平坦、水平的非铁测试表面。
- 磁力计，如 Meda FVM400。

5.10.6.2 测试设置 [英语]

1. 在测试表面上以 90° 角度做一个标记，以用于重复进行设备校准。例如，使用两条相互垂直的胶带。
2. 使用磁力计验证测试表面是否具有连续的磁场，不受附近电子设备或磁铁的影响。

5.10.6.3 规程 [英语]

本节中概述了指南针测试规程。

1. 启动 Accessory Developer Assistant App 并登录。
2. 选择“Compass”（指南针）和保护壳类型，例如：“Folio”（双面夹）、“Keyboard Folio”（键盘式双面夹）或“Shell”（贝壳式）。

3. 向下滚动并选择所有支持的保护壳配置，详见图 5-13（第 61 页）。

图 5-13 保护壳配置

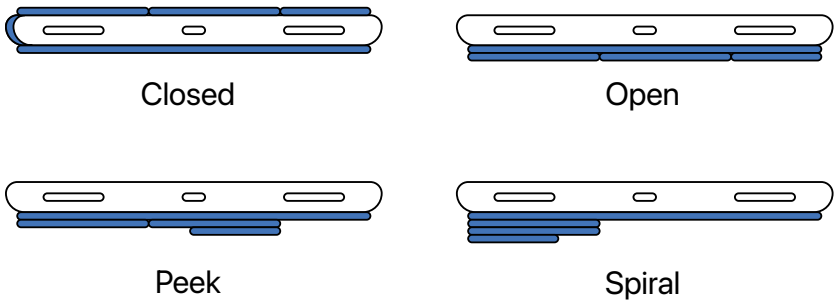

4. 向下滚动，并选择所有包含的保护壳材质。
5. 选择“Start Test”（开始测试）。
6. 如果选择了封闭式保护壳配置，请在提示时连接外部显示器和鼠标。
7. 将未安装保护壳的设备放到测试表面上，使其与标记对齐。
8. 选择“Measure Baseline”（测量基准），以收集初始测量结果。
9. 完成测量后，请按照屏幕上的说明操作，以安装保护壳并收集每一种受支持保护壳配置的测量结果。
10. 验证所有测试是否都通过，并记下结果。

5.10.7 声学 [英语]

以下测试规程适用于内置扬声器和/或麦克风的设备。

5.10.7.1 免提通话 [英语]

这个规程用于评估保护壳对设备免提通话性能的影响。

5.10.7.1.1 器材和测试设置 [英语]

这个规程需要两位操作员分别在安静的房间中完成一些操作。

房间 A：

- 操作员 A
- 设备（具有蜂窝网络服务），用于评估保护壳。
  - 在房间内，设备应当至少有两格蜂窝移动信号。

房间 B：

- 操作员 B
- 座机免提电话
- 数字录音机（例如带有“语音备忘录”App 的设备）

5.10.7.1.2 合格/不合格判断标准 [英语]

这个规程中存在两类不合格的情况：

- 有回声：操作员 B 从座机中听到自己的声音。
- 语音模糊不清：操作员 B 听到操作员 A 声音断断续续。

这两个类别的合格/不合格标准应当通过使用以下参考设备完成测试规程加以确定：

- 无保护壳的设备。

参考设备上和装有保护壳的设备上进行的测试之间应当没有可察觉的差异。

5.10.7.1.3 规程 [英语]

1. 操作员 A：在房间 A 中，使用设备（无保护壳）拨打房间 B 内的座机。
2. 操作员 A：将设备置于免提模式。
3. 操作员 B：在房间 B 中，使用座机接听来电。
4. 操作员 B：将座机置于免提模式。
5. 操作员 A 和 B：同时朗读下列短语来评估通话质量：
   a. The birch canoe slid on the smooth planks.
   b. Glue the sheet to the dark blue background.
   c. It's easy to tell the depth of a well.
   d. These days a chicken leg is a rare dish.
   e. Rice is often served in round bowls.
   f. The juice of lemons makes fine punch.
   g. The box was thrown beside the parked truck.
   h. The hogs were fed chopped corn and garbage.
   i. Four hours of steady work faced us.
   j. Large size in stockings is hard to sell.
6. 操作员 B：评估通话质量。确保在没有保护壳的设备上，通话可听到且非常清晰。
7. 操作员 A：将设备装入保护壳。
8. 操作员 B：使用数字录音机开始录音。
9. 操作员 A：说明测试日期，并指明保护壳的制造商名称、产品名称以及唯一标识符 (UID)（流水线生产名称、设计版本等）。
10. 操作员 A 和 B：同时朗读上述相同的短语。
11. 操作员 B：停止录音。
12. 操作员 B：根据“合格/不合格判断标准（第 62 页）”评估录音质量。

这个测试规程所用的短语摘选自《IEEE Transactions on Audio and Electroacoustics》（IEEE 影片和电声学杂志）1969 年 9 月第 3 期第 17 卷第 225-246 页的“IEEE Recommended Practice for Speech Quality Measurements”（IEEE 语音质量测量推荐做法）。

版权所有 © 2023 Apple Inc. 保留所有权利。

6. 保护盖

[英语]

本章适用于会覆盖设备显示屏的配件。

6.1 磁场干扰

[英语]

保护盖配件不应干扰设备的以下功能：

- 磁罗盘。
- 后置摄像头自动对焦 (AF)。
- 后置摄像头光学图像防抖 (OIS)（若有）。
- 前置摄像头自动对焦（若有）。

有关其他详细信息，请参阅“磁场干扰（第 26 页）”。

6.2 智能保护盖

[英语]

本文提供了以下设备标明磁体和霍尔效应传感器位置的尺寸图：

- 12.9 英寸 iPad Pro（第 6 代）3/5（第 299 页）
- 11 英寸 iPad Pro（第 4 代）3/5（第 304 页）
- iPad（第 10 代）4/6（第 310 页）
- iPad Air（第 5 代）和 iPad Air（第 4 代）3/5（第 315 页）
- iPad mini（第 6 代）3/6（第 320 页）
- iPad mini（第 6 代）4/6（第 321 页）
- iPad（第 9 代）、iPad（第 8 代）和 iPad（第 7 代）2/4（第 325 页）
- 12.9 英寸 iPad Pro（第 5 代）3/5（第 330 页）
- 11 英寸 iPad Pro（第 3 代）3/5（第 335 页）
- 12.9 英寸 iPad Pro（第 4 代）3/5（第 340 页）
- 11 英寸 iPad Pro（第 2 代）3/5（第 345 页）
- iPad Air（第 3 代）无线局域网机型 2/3（第 349 页）
- iPad Air（第 3 代）无线局域网 + 蜂窝网络机型 2/3（第 352 页）
- iPad mini（第 5 代）无线局域网机型 2/3（第 355 页）
- iPad mini（第 5 代）无线局域网 + 蜂窝网络机型 2/3（第 358 页）
- 12.9 英寸 iPad Pro（第 3 代）2/3（第 361 页）
- 11 英寸 iPad Pro（第 1 代）2/3（第 364 页）

2023/10/10 | 版权所有 © 2023 Apple Inc. 保留所有权利。

- 12.9 英寸 iPad Pro（第 2 代）磁体/霍尔效应传感器 1/2（第 368 页）
- 12.9 英寸 iPad Pro（第 2 代）磁体/霍尔效应传感器 2/2（第 369 页）
- 10.5 英寸 iPad Pro 磁体/霍尔效应传感器 1/2（第 372 页）
- 10.5 英寸 iPad Pro 磁体/霍尔效应传感器 2/2（第 373 页）
- iPad（第 5 代和第 6 代）磁体/霍尔效应传感器 1/2（第 375 页）
- iPad（第 5 代和第 6 代）磁体/霍尔效应传感器 2/2（第 376 页）
- 9.7 英寸 iPad Pro 磁体/霍尔效应传感器 1/2（第 379 页）
- 9.7 英寸 iPad Pro 磁体/霍尔效应传感器 2/2（第 380 页）
- 12.9 英寸 iPad Pro（第 1 代）磁体/霍尔效应传感器 1/2（第 383 页）
- 12.9 英寸 iPad Pro（第 1 代）磁体/霍尔效应传感器 2/2（第 384 页）
- iPad mini 4 磁体/霍尔效应传感器（第 387 页）

2023/10/10 | 版权所有 © 2023 Apple Inc. 保留所有权利。

7. 屏幕覆膜 [英语]

Apple 产品的显示屏经过精心设计和测试，可提供精准的视觉性能。许多产品还采用多点触控技术来支持用户交互。任何覆盖屏幕或介于屏幕表面与用户手指之间的材料（或 iPad 上的书写工具）都可能会影响视觉、触控或传感器性能。

7.1 产品设计 [英语]

屏幕覆膜不得：

- 造成多点触控、Apple Pencil 或传感器性能下降。
- 在触摸屏与覆膜之间引入气隙。
- 导电。
- 造成冷白色光源出现色差。

屏幕覆膜的相对介电常数（介电常数）应为 3.1 至 3.2。

屏幕覆膜不得：

- 厚度超过 0.3 mm。
- 厚度超过 0.095 mm（若要支持 Apple Pencil）。
- 水接触角 <110°。

> **注：**
> 非光滑表面可能会加速 Apple Pencil 笔尖的磨损。

7.1.1 透射率 [英语]

屏幕覆膜的透射率应：

- 在有效显示区域的任何视角达到透明玻璃透射率的 90% 以上。请参见“设备尺寸图（第 232 页）”。
- 保持水平曲线，定义详见图 7-1（第 66 页）。将透射光谱归一化为 550 纳米对应的值之后，归一化后的光谱应在 500-800 纳米对应的 [0.99，1.01] 范围内以及 400-500 纳米对应的 [0.95，1.01] 范围内。

图 7-1 透射光谱

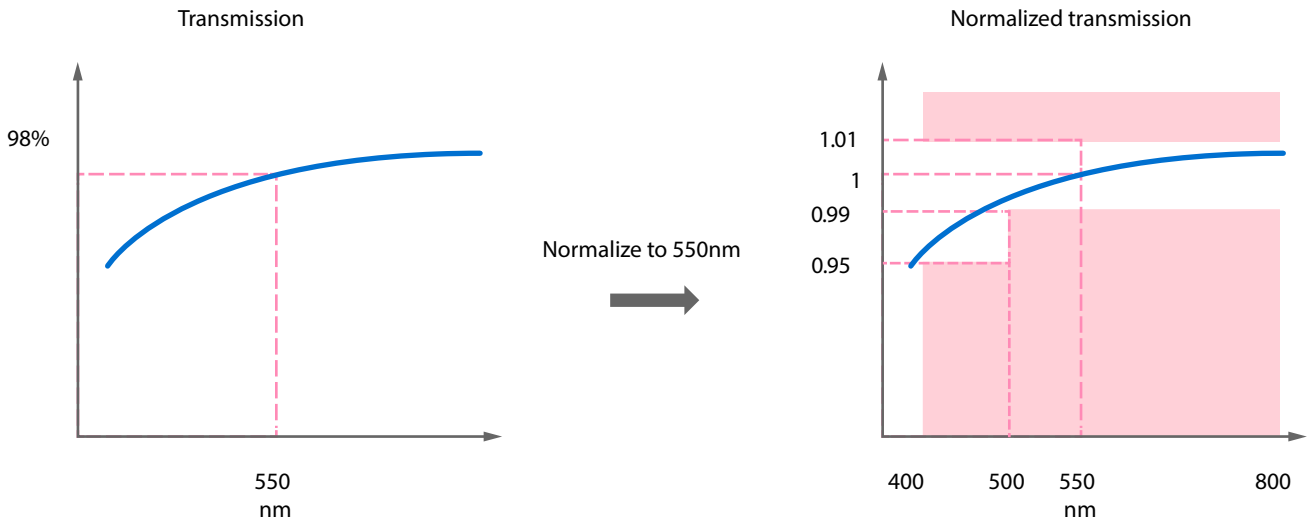

7.1.2 红外透射率 [英语]

红外透射率差异不得超过 1.5%。在 1200 纳米 - 1500 纳米范围内红外透射率应比光源大：

- 90%（入射角在 0° 和 45° 之间时）。
- 84%（入射角在 45° 和 60° 之间时）。

7.1.3 透射雾度 [英语]

透射雾度是指偏离正常透射光强 2.5° 角以上的可见光和红外光散射光强的百分比。透射雾度应：

- 以下设备应不超过 0.3%：
  - iPhone 15 Pro Max
  - iPhone 15 Pro
  - iPhone 15 Plus
  - iPhone 15
  - iPhone 14 Pro Max
  - iPhone 14 Pro
- 不超过 13%（所有其他设备）。
- 根据 ASTM D1003 方法采用雾度仪进行测量。

7.1.4 灵动岛 [英语]

屏幕覆膜不应为灵动岛打孔。

2023/10/10 | 版权所有 © 2023 Apple Inc. 保留所有权利。

7.2 边缘轻扫手势和边缘按压手势 [英语]

详见“边缘轻扫手势（第 34 页）”和“边缘按压手势（第 35 页）”。

2023/10/10 | 版权所有 © 2023 Apple Inc. 保留所有权利。

8. 摄像头附件 [英语]

本章适用于旨在改变设备摄像头所拍摄图像的配件。

8.1 磁场干扰 [英语]

摄像头附件配件不应干扰设备的以下功能：

- 磁罗盘。
- 后置摄像头自动对焦 (AF)。
- 后置摄像头光学图像防抖 (OIS)（若有）。
- 前置摄像头自动对焦（若有）。

有关其他详细信息，请参阅“磁场干扰（第 26 页）”。

9. 转换器 [英语]

转换器配件是让物理上不兼容的部件和配件可以相连的加密狗或内置连接线（第 22 页）。

除非另有规定，否则配件可以集成一个或多个转换器组件及其他配件功能，以构成更加高级的多端口转换器。例如，闪电或 USB-C 转换器可以支持音频、电源、外部存储、媒体控制和 app 通信等功能。

有关更多信息，请参阅“配件接口规范（第 22 页）”。

9.1 耳机转换器（闪电至 3.5 mm） [英语]

闪电至 3.5 mm 耳机转换器是可以进行 3.5 mm 音频连接的配件。

有关更多信息，请参阅“配件接口规范（第 22 页）”。

9.2 USB-A/USB-C 至闪电耳机转换器 [英语]

USB-A 至闪电或 USB-C 至闪电耳机转换器是集成闪电插口 (C37) 的配件，能够支持采用闪电接头的耳机、扬声器和麦克风。

有关更多信息，请参阅“配件接口规范（第 22 页）”。

9.3 以太网转换器（闪电至 RJ45） [英语]

闪电至以太网转换器是让设备可以连接到有线网络的配件。例如，Apple USB 以太网转换器就是一种类似这样的 Mac 配件。

有关更多信息，请参阅“配件接口规范（第 22 页）”。

9.4 闪电至 USB Micro-B 转换器

[英语]

图 9-1 闪电至 USB Micro-B 转换器

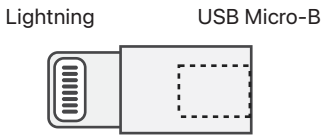

闪电至 USB Micro-B 转换器是功能与 Apple 闪电至 USB Micro-B 转换器完全相同的闪电加密狗配件，其中应该包含以下组件：

- 闪电接头。
- USB Micro-B 插口。

有关更多信息，请参阅“配件接口规范（第 22 页）”。

2023/10/10 | 版权所有 © 2023 Apple Inc. 保留所有权利。

10. 交流电源适配器 [英语]

交流电源适配器将交流“市电”电源转换为直流电，以便为设备供电。它们可以使用以下一种或多种方式供电：

- USB-C 插口（第 224 页）与 USB-C 连接线或 USB-C 转闪电连接线结合使用。
- USB-A 插口（第 220 页）与 USB-A 转闪电连接线结合使用。
- 设备供电（感应式）（第 129 页）。

10.1 转换器开关频率 [英语]

如果转换器开关频率不满足以下要求，则设备触摸屏或音频功能可能会降低：

- 在负载大于 5 mA 的情况下，转换器开关频率应该大于 22 kHz。
- 在负载大于 20 mA 的情况下，转换器开关频率需要满足以下要求：
  - 应该大于 60 kHz。
  - 应该大于 450 kHz。

10.2 YCAP 交流电容器 [英语]

交流电源适配器应在适配器变压器的初级和次级部分之间包含一个YCAP交流电容器（最高1000 pF），以降低开关频率下的共模噪声。这些频率或它们的谐波可能会干扰设备的触摸屏传感器。

10.3 阻抗稳定性 [英语]

交流电源适配器的串联阻抗不应突然改变。阻抗突然改变可能会导致触摸屏传感器出现输出振荡。

全波桥式整流器中所用的桥式二极管可能是导致串联阻抗突然改变的主要原因。如果桥式二极管的固有逆向电容较大（大于100 pF），那么因二极管开关而引起的净阻抗改变可能会较小并可以接受。不过，在更紧凑的 IC 设计中，由于芯片面积减小，二极管逆向电容可能会减小。

这时可以使用图 10-1（第 72 页） 和表格 10-1（第 72 页） 中所示的示例电路，稳定逆向电容低到不可接受的桥式二极管的阻抗。本例中分别与二极管 D1、D2、D3 和 D4 并联了电容器 C1、C2、C3 和 C4，以便稳定桥式阻抗。它们的值大于二极管的固有逆向电容。

2023/10/10 | 版权所有 © 2023 Apple Inc. 保留所有权利。

电阻器 R1、R2、R3 和 R4 为可选；添加后，它们可以阻止高频噪声，有助于实现 EMI 兼容性。表格 10-1（第 72 页） 中所选的 R1、R2、R3 和 R4 推荐值可以确保这些电阻器在电力线路频率下的阻抗相对于 C1、C2、C3 和 C4 的阻抗来说非常小。

图 10-1 典型的交流电源适配器二极管桥接电路

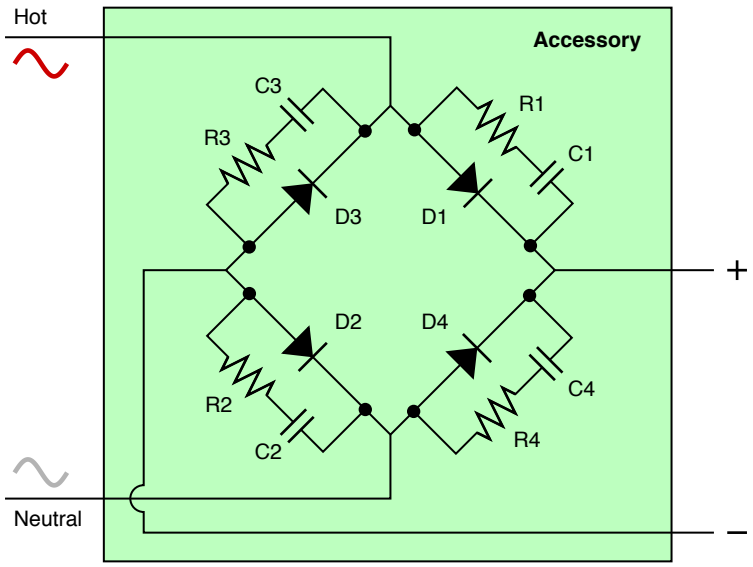

表格 10-1 交流电源适配器二极管桥接电路的典型元件值

元件	值
C1、C2、C3、C4	47 pF
R1、R2、R3、R4	2 kΩ

10.4 保险丝保护 [英语]

交流电源适配器的输入端中应包含保险丝，以在任何故障情况下对适配器提供保护。

10.5 短路响应 [英语]

在交流电源适配器的输出端与次级共用端（小于 10 mΩ）短接时，输出应断开或折回，而不会造成任何损坏。

11. 外接电池

[英语]

外接电池是一种旨在为设备供电的配件。

外接电池可以使用以下一种或多种方式供电：

- 感应式功率发射器，请参阅“设备供电（感应式）（第 129 页）”。
- 集成式闪电接口，请参阅“设备供电（闪电）（第 125 页）”。
- USB-C 插口（第 224 页）与 USB-C 连接线或 USB-C 转闪电连接线结合使用。
- USB-A 插口（第 220 页）与 USB-A 转闪电连接线结合使用。

2023/10/10 | 版权所有 © 2023 Apple Inc. 保留所有权利。

12. 耳机 [英语]

耳机可为用户提供个人化的音频体验。设备以不同的方式对待耳机和带有扬声器的配件。

耳机应符合：
- TDMA 噪音（第 26 页）要求。
- 设备销售地区适用的音量限制规定。

12.1 产品设计 [英语]

耳机应配备：
- 贴耳、覆耳或入耳式的驱动单元。
- 主要用于记录用户语音的麦克风。

12.2 音频接口 [英语]

耳机应使用以下接口之一来建立与设备的音频连接：
- Apple USB-C 模拟耳机模块（第 209 页）。
- USB-C 插头（第 221 页），使用 USB 音频设备类 2.0 或 3.0 兼容编解码器。
- 蓝牙（第 191 页）：
  - 免提描述文件 (HFP)（第 195 页）
  - 高级音频分发描述文件 (A2DP)（第 198 页）

12.3 遥控器 [英语]

控制应使用以下方法之一来实现：
- 直接电气连接至 Apple 耳机遥控器和麦克风发射器（第 214 页）（集成了 Apple USB-C 模拟耳机模块（第 209 页）时）。
- HID 耳机遥控器（第 134 页），使用以下方式之一时：
  - USB-C 插头（第 221 页），支持 USB 音频设备类 2.0 或 3.0 兼容编解码器。
  - 蓝牙（第 191 页）。
- 蓝牙音频/视频远程描述文件 (AVRCP)（第 197 页）。

蓝牙耳机应实现与 Apple 有线耳机相同的控制。

12.4 USB-C 耳机标识 [英语]

本节适用于集成了 USB-C 接口的耳机。

耳机应当：

- 在标准设备描述符中设置 idVendor、idProduct、iManufacturer、iProduct 和 iSerialNumber，以反映配件标记和包装。
- 如果耳机没有集成麦克风，则将 Output Terminal Type 设置为 `0x0302`（耳机）。
- 如果耳机集成了麦克风，则将 Output Terminal Type 和 Input Terminal Type 设置为 `0x0402`（耳麦）。
- 将 Audio Function Category 设置为 `0x04`（耳麦）。

耳机应当：

- 设置 iInterface Playback 和 iInterface Record 字符串，以反映配件的标记和包装。
- 在标准设备描述符中设置唯一的 iSerialNumber。

> **注：**
> C125 已将其 Output Terminal Type 和 Input Terminal Type 设置为 `0x0402`（耳麦），并将 Audio Function Category 设置为 `0x04`（耳麦）。这些配置不可覆盖。

13. 闪光灯

[英语]

从前置或后置摄像头拍摄静态图像时，闪光灯配件将取代设备的集成式闪光灯。摄影师可以使用此类配件来控制场景照明，从而满足创意目的。

闪光灯需要：

- 兼容所有 iOS 相机应用程序。
- 使用闪电接口来与 iPhone 摄像头同步。

图 13-1 集成式闪光灯（上面）与配件闪光灯（下面）对比示例

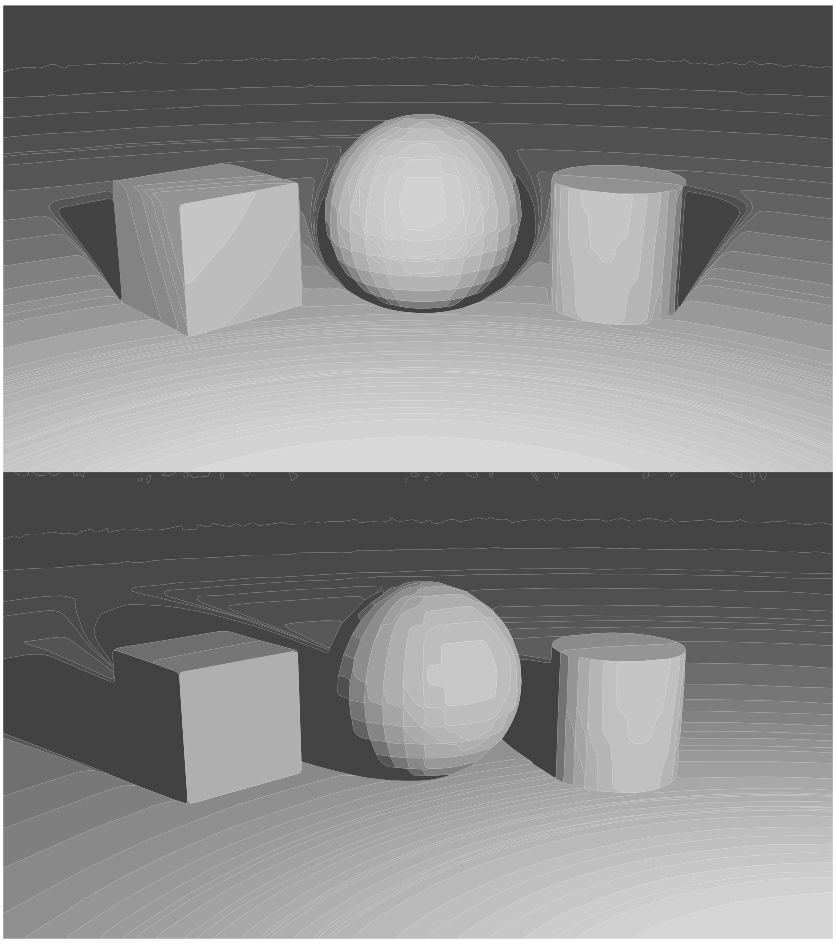

下列设备支持闪光灯配件：

- iPhone 14 Pro Max

2023/10/10 | 版权所有 © 2023 Apple Inc. 保留所有权利。

- iPhone 14 Pro
- iPhone 14 Plus
- iPhone 14
- iPhone SE（第 3 代）
- iPhone 13 Pro Max
- iPhone 13 Pro
- iPhone 13
- iPhone 13 mini
- iPhone 12 Pro Max
- iPhone 12 Pro
- iPhone 12
- iPhone 12 mini
- iPhone SE（第 2 代）
- iPhone 11 Pro Max
- iPhone 11 Pro
- iPhone 11

这项功能仅在 iOS 14.0 或更新版本上受支持。

有关更多信息，请参阅“配件接口规范（第 22 页）”。

2023/10/10 | 版权所有 © 2023 Apple Inc. 保留所有权利。

14. 键盘 [英语]

设备可以接受用户使用配件键盘来代替屏幕键盘进行输入。

14.1 要求 [英语]

配件键盘应该：

- 支持人机接口设备 (HID)（第 188 页） 协议。
- 不将自身标识为 Apple 品牌的配件，例如，采用 Apple 供应商 ID 和/或产品 ID 进行标识。

明确禁止使用出现以下任何行为的键盘按键：

- 实际按下/松开按键时发送“已按下按键”或“已松开按键”以外的其他内容。
- 模拟按键组合或序列（例如复制按钮发送 ⌘-C，或者生成定时事件序列的宏）。
- 模拟定时用户操作，例如“按住”。
- 根据其他控制表面的状态发送其他 HID 用法。

键盘发送的所有 HID 用法应响应直接用户操作（第 22 页）。

键盘可以集成 LED 指示灯来指示：

- 设备 Caps Lock 按键的状态。
- 连接状态，例如蓝牙连接状态。
- 配件电池状态（如果适用）。

键盘不应配备任何其他设备不支持的 LED 状态指示灯。

键盘应尽可能与触控板（第 84 页）集成，以增强用户使用体验。

机械按键布局应符合 ISO/IEC 9995-2、ANSI-INCITS 154-1988 或 JIS X 6002-1980 标准。键盘 HID 描述符应按表格 14-5（第 82 页） 中的定义，将键盘物理布局用法设置为相应的布局代码。

键盘 HID 描述符应按“*人机接口设备 (HID) 版本 1.11 第 6.2.1 部分 HID 描述符的设备分类定义*”中的定义，将“bCountryCode”栏位设置为相应的国家或地区代码。

键盘 HID 描述符应声明支持 HID 键盘/触控板页面。HID 报告描述符可以按 HID 报告描述符示例（第 82 页）所示，声明使用最少 0 个、最多 255 个输入用法，以提高效率。否则，描述符应单独枚举键盘能够发送的每个 HID 键盘/触控板页面的用法。

键盘应实施可发出以下 HID 键盘/触控板页面用法的各个按键：

表格 14-1 键盘需要用到的 HID 键盘/触控板页面 (0x07) 控件

用法 ID	用法名称	Apple 功能
0x0004	a 和 A	a 和 A
0x0005	b 和 B	b 和 B
0x0006	c 和 C	c 和 C
0x0007	d 和 D	d 和 D
0x0008	e 和 E	e 和 E
0x0009	f 和 F	f 和 F
0x000A	g 和 G	g 和 G
0x000B	h 和 H	h 和 H
0x000C	i 和 I	i 和 I
0x000D	j 和 J	j 和 J
0x000E	k 和 K	k 和 K
0x000F	l 和 L	l 和 L
0x0010	m 和 M	m 和 M
0x0011	n 和 N	n 和 N
0x0012	o 和 O	o 和 O
0x0013	p 和 P	p 和 P
0x0014	q 和 Q	q 和 Q
0x0015	r 和 R	r 和 R
0x0016	s 和 S	s 和 S
0x0017	t 和 T	t 和 T
0x0018	u 和 U	u 和 U
0x0019	v 和 V	v 和 V
0x001A	w 和 W	w 和 W
0x001B	x 和 X	x 和 X
0x001C	y 和 Y	y 和 Y
0x001D	z 和 Z	z 和 Z
0x001E	1 和 !	1 和 !
0x001F	2 和 @	2 和 @
0x0020	3 和 #	3 和 #
0x0021	4 和 $	4 和 $
0x0022	5 和 %	5 和 %
0x0023	6 和 ^	6 和 ^
0x0024	7 和 &	7 和 &
0x0025	8 和 *	8 和 *
0x0026	9 和 (	9 和 (
0x0027	0 和)	0 和)

用法 ID	用法名称	Apple 功能
0x0028	Return/Enter	返回
0x002A	Delete/Backspace	删除
0x002B	Tab	制表符
0x002C	Spacebar	空格键
0x002D	- 和 _	- 和 _
0x002E	= 和 +	= 和 +
0x002F	[和 {	[和 {
0x0030	] 和 }	] 和 }
0x0031	\ 和 |	\ 和 |
0x0033	; 和 :	; 和 :
0x0034	‘ 和 "	‘ 和 "
0x0035	重音符和波浪号	` 和 ~
0x0036	, 和 <	, 和 <
0x0037	. 和 >	. 和 >
0x0038	/ 和 ?	/ 和 ?
0x0039	CapsLock	大写锁定
0x004F	RightArrow	向右键
0x0050	LeftArrow	向左键
0x0051	DownArrow	向下键
0x0052	UpArrow	向上键
0x00E1	LeftShift	左 Shift 键
0x00E2	LeftAlt	左 Option 键/Alt 键
0x00E3	LeftGUI	左命令键/⌘
0x00E5	RightShift	右 Shift 键
0x00E6	RightAlt	右 Option 键/Alt 键
0x00E7	RightGUI	右命令键/⌘

键盘可以实施可发出以下 HID 键盘/触控板页面用法的单个按键：

表格 14-2 键盘可以用到的 HID 键盘/触控板页面 (0x07) 控件

用法 ID	用法名称	Apple 功能
0x0029	Escape	Escape 键
0x00E0	LeftControl	左 Control 键
0x00E4	RightControl	右 Control 键
0x004A	Home	Home 键
0x004D	End	End 键
0x0054	小键盘 /	小键盘 / 键
0x0055	小键盘 *	小键盘 * 键

2023/10/10 | 版权所有 © 2023 Apple Inc. 保留所有权利。

用法 ID	用法名称	Apple 功能
0x0056	小键盘 -	小键盘 - 键
0x0057	小键盘 +	小键盘 + 键
0x0058	小键盘 Enter	小键盘 Enter 键
0x0059	小键盘 1 和 End	小键盘 1 键
0x005A	小键盘 2 和向下键	小键盘 2 键
0x005B	小键盘 3 和 PageDn	小键盘 3 键
0x005C	小键盘 4 和向左键	小键盘 4 键
0x005D	小键盘 5	小键盘 5 键
0x005E	小键盘 6 和向右键	小键盘 6 键
0x005F	小键盘 7 和 Home	小键盘 7 键
0x0060	小键盘 8 和向上键	小键盘 8 键
0x0061	小键盘 9 和 PageUp	小键盘 9 键
0x0062	小键盘 0 和 Insert	小键盘 0 键
0x0063	小键盘 . 和 Delete	小键盘 . 键
0x0067	小键盘 =	小键盘 = 键

键盘可以实施可发出以下 HID 消费者页面用法的单个按键：

表格 14-3 键盘使用的 HID 消费者页面 (0x0C) 控件

用法 ID	用法名称	Apple 功能
0x0030	电源	锁定
0x0040	菜单	主屏幕按钮
0x006F	显示器亮度增加	调亮
0x0070	显示器亮度减少	调暗
0x00B5	扫描下一个曲目	右移
0x00B6	扫描上一个曲目	左移
0x00CD	播放/暂停	播放/暂停
0x00E2	静音	静音
0x00E9	音量提高	更响亮
0x00EA	音量降低	更柔和
0x01AE	AL 键盘布局	切换屏幕键盘
0x029D	AC 键盘布局选择	地球键
0x0221	AC 搜索	聚焦
0x025B	提升	播放更多类似歌曲
0x025C	降低	减少播放类似歌曲
0x0262	添加到购物车	添加至欲购清单
0x02C3	键盘物理布局	键盘物理布局请参阅表格 14-5（第 82 页）。

键盘可以实施可发出以下 HID 通用桌面页面用法的单个按键：

表格 14-4 键盘使用的 HID 通用桌面页面 (0x01) 控件

用法 ID	用法名称	Apple 功能
0x009B	系统勿扰模式	切换对焦模式

表格 14-5 键盘物理布局代码

值	说明
1	101（例如，美国）- ANSI
3	102（例如，德国）- ISO
5	106（DOS/V 日本）- JIS

JIS 键盘还应实施在日语 Apple 妙控键盘中发现的其他按键。非 JIS 键盘不应实施这些日语按键。

表格 14-6 JIS 键盘需要用到的 HID 键盘/触控板页面 (0x07) 控件

用法 ID	用法名称	Apple 功能
0x0087	Keyboard International1	_
0x0089	Keyboard International3	¥
0x0090	LANG1	切换到上一种语言
0x0091	LANG2	切换到下一种语言

14.2 示例 [英语]

14.2.1 HID 报告描述符示例 [英语]

```
USAGE PAGE (Generic Desktop)              05 01
USAGE (Keyboard)                          09 06
COLLECTION (Application)                  A1 01
  USAGE PAGE (LEDs)                       05 08
  LOGICAL MINIMUM (0)                     15 00
  LOGICAL MAXIMUM (1)                     25 01
  USAGE (Caps Lock)                       09 02
  REPORT SIZE (1)                         75 01
  REPORT COUNT (1)                        95 01
  OUTPUT (Data,Var,Abs)                   91 02
  REPORT SIZE (7)                         75 07
  REPORT COUNT (1)                        95 01
  OUTPUT (Cnst,Var,Abs)                   91 03
  USAGE PAGE (Keyboard)                   05 07
```

```
  USAGE MINIMUM (Keyboard Left Control)   19 E0
  USAGE MAXIMUM (Keyboard Right GUI)      29 E7
  REPORT SIZE (1)                         75 01
  REPORT COUNT (8)                        95 08
  INPUT (Data,Var,Abs)                    81 02
  LOGICAL MINIMUM (0)                     15 00
  LOGICAL MAXIMUM (255)                   26 FF 00
  USAGE MINIMUM (0)                       19 00
  USAGE MAXIMUM (255)                     2A FF 00
  REPORT SIZE (8)                         75 08
  REPORT COUNT (5)                        95 05
  INPUT (Data,Ary,Abs)                    81 00
  USAGE PAGE (Consumer Devices)           05 0C
  LOGICAL MINIMUM (0)                     15 00
  LOGICAL MAXIMUM (1)                     25 01
  USAGE (Menu)                            09 40
  USAGE (AC Search)                       0A 21 02
  USAGE (AL Keyboard Layout)              0A AE 01
  USAGE (Scan Previous Track)             09 B6
  USAGE (Play/Pause)                      09 CD
  USAGE (Scan Next Track)                 09 B5
  USAGE (Mute)                            09 E2
  USAGE (Volume Down)                     09 EA
  USAGE (Volume Up)                       09 E9
  USAGE (Power)                           09 30
  REPORT SIZE (1)                         75 01
  REPORT COUNT (10)                       95 0A
  INPUT (Data,Var,Abs)                    81 02
  REPORT SIZE (6)                         75 06
  REPORT COUNT (1)                        95 01
  INPUT (Cnst,Var,Abs)                    81 03
END COLLECTION                            C0
```

2023/10/10 | 版权所有 © 2023 Apple Inc. 保留所有权利。

15. 触控板 [英语]

设备可以接受用户在配件触控板中的输入。

这项功能仅在 iPadOS 14.5 或更高版本上受支持。

15.1 要求 [英语]

配件触控板应：

- 支持人机接口设备 (HID)（第 188 页） 协议。
- 不将自身标识为 Apple 品牌的配件，例如，使用 Apple 供应商 ID (VID) 进行标识。

明确禁止使用出现以下任何行为的配件触控板：

- 模拟触控手势组合。
- 模拟定时用户操作，例如“点按并按住”、拖移和缩放手势。
- 根据其他控制表面的状态发送其他 HID 用法。

配件触控板发送的所有 HID 报告应响应直接用户操作（第 22 页）。

触控板的数字转换器表面应同时支持 2-5 个触点。

15.1.1 与键盘集成 [英语]

配件触控板应与键盘（第 78 页）集成，同时支持两种输入方法。以下交互示例同时使用键盘输入和触控板输入：

- 在光标移动和键盘输入之间快速转换。
- 进行拖移操作时按住修饰键。
- 按下 ⌘-Tab 键以显示 App 切换器，然后使用光标切换 App。
- 使用触控板拖移项目，然后按下 ⌘-Tab 键以切换 App。

15.1.2 HID 报告描述符 [英语]

配件触控板的 HID 报告描述符应声明支持 HID 数字转换器页面。

配件触控板应实施以下 HID 数字转换器页面用法：

表格 15-1 配件触控板需要用到的 HID 数字转换器页面 (0x0D) 控件

用法 ID	用法名称	Apple 功能
0x01	按钮 1	主要按钮状态
0x05	报告 ID	功能报告 ID
0x22	手指	触点集合数
0x30	X	触点位置的 X 轴坐标
0x31	Y	触点位置的 Y 轴坐标
0X38 或 0x51	换能器索引或触点 ID	唯一标识手指/触点的索引（0 到 4）
0x42	指尖切换	触点位于数字转换器表面
0x47	置信度	触控点是预期的有效触点
0x57	表面切换	开启/关闭数字转换器表面

配件触控板可以实施以下 HID 数字转换器页面用法。推荐使用以下 HID 用法：

表格 15-2 建议配件触控板使用的 HID 数字转换器页面 (0x0D) 控件

用法 ID	用法名称	Apple 功能
0x02	按钮 2	次要按钮状态
0x56	扫描时间	相对扫描时间
0xA1	报告率	报告率 (Hz)

15.1.3 共存情况 [英语]

配件触控板应：

- 不得造成多点触控或 Apple Pencil 性能下降。
- 不支持高于 6 V_{pp} 的驱动电压。
- 不支持低于 500 kHz 的驱动频率。
- 支持 3 个或以上驱动频率，每个驱动频率至少间隔 50 kHz。
- 在有效分辨率降至 120 DPI 以下时，动态切换驱动频率。例如，外部电源产生的 50 mV RMS 噪音可能导致有效分辨率下降。

配件触控板应支持正弦波窄带驱动频率。

15.1.4 性能 [英语]

配件触控板应：

- 在整个数字转换器表面行为统一。
- 以独特方式检测中心距接近 8 毫米的触点。
- 检测最低 5 毫米的触点尺寸。
- 区分多指轻点和单指拖移。

- 保持有效输入分辨率低于 20 微米，并立即报告高于或等于有效输入分辨率的位置更新。
- 保持有效分辨率高于 600 DPI。
- 保持尽可能高的设备报告率。Apple 建议 60 Hz 或更高。
- 保持声相延迟低于或等于 23 毫秒。
- 保持触控延迟低于或等于 35 毫秒。
- 保持位置精度低于或等于 500 微米。
- 保持静触点抖动低于或等于 210 微米。
- 不得与理想线偏离 250 微米以上。

15.1.5 输入置信度 [英语]

配件触控板应：

- 设置有效输入转换成无效输入的置信度用法。触点转换应快速、准确和稳定完成，以提供最佳的用户体验。触点有误或出现晃动可能导致识别为意外手势，或导致预期手势中断或取消。
- 检测和拒绝意外/无效输入（例如手掌输入），与此同时继续向设备报告有效输入（例如多触点）。
- 区分有效的大拇指输入和无效的掌心轻放输入。
- 拒绝距离触控表面超过 1 毫米的输入。

15.1.6 点按唤醒 [英语]

设备使用报告 ID 用法来指示触控板应不应该报告表面触点。设备将使用“表面切换”用法来让配件进入“点按唤醒”模式，该模式只接受按钮点按。触控板可以借此进入低电量模式，在该模式下，数字转换器表面不必持续扫描。

这个功能报告还包含诸多信息。设备可以在枚举之后随时查询配件触控板，以获得“表面切换”的当前状态，并获取配件的报告率。

15.2 示例 [英语]

15.2.1 HID 报告描述符示例 [英语]

以下描述符适用于 92.10 毫米 x 50.60 毫米尺寸、配备两个按钮且最多同时支持五个触点的触控板。

为在配件触控板固件中实施这个 HID 报告描述符，可能需要修改其他内容，具体如下：

- 修改每根手指位置在 X 轴 (0x30) 和 Y 轴 (0x31) 的实际最大值，以匹配配件触控板的外形尺寸。计量单位为毫米的十分之一（0.1 毫米）。在本例中，X 轴的范围从 0x0 到 0x0399 (92.10 毫米)，Y 轴的范围从 0x0 到 0x01FA (50.60 毫米)。
- 修改每根手指位置在 X 轴 (0x30) 和 Y 轴 (0x31) 的逻辑最大值，以匹配配件触控板的分辨率。在本例中，X 轴 (0x30) 的范围从 0 到 0x0451（对应分辨率 92.10/1105，约为 0.083 毫米），Y 轴 (0x31) 的范围从 0 到 0x025F（对应相同分辨率 50.60/607，约为 0.083 毫米）。

2023/10/10 | 版权所有 © 2023 Apple Inc. 保留所有权利。

```
USAGE PAGE (Digitizer Device Page)                  05 0D
USAGE (Touch Pad)                                   09 05
COLLECTION (Application)                            A1 01
  REPORT_ID (3)                                     85 03
  LOGICAL MAXIMUM (65535)                           27 FF FF 00 00
  USAGE (Relative Scan Time (DV=Dynamic Value))     09 56
  REPORT SIZE (16)                                  75 10
  REPORT COUNT (1)                                  95 01
  INPUT (Data,Var,Abs)                              81 02
  LOGICAL MAXIMUM (1)                               25 01
  REPORT SIZE (1)                                   75 01
  USAGE (Surface Switch)                            09 57
  FEATURE (Data,Var,Abs)                            B1 02
  LOGICAL MAXIMUM (32767)                           26 FF 7F
  REPORT SIZE (15)                                  75 0F
  USAGE (Report Rate)                               09 A1
  FEATURE (Data,Var,Abs)                            B1 02
  USAGE PAGE (Button Page)                          05 09
  LOGICAL MAXIMUM (1)                               25 01
  USAGE MINIMUM (Button 1)                          19 01
  USAGE MAXIMUM (Button 2)                          29 02
  REPORT COUNT (2)                                  95 02
  REPORT SIZE (1)                                   75 01
  INPUT (Data,Var,Abs)                              81 02
  REPORT COUNT (6)                                  95 06
  INPUT (Cost, Ary, Abs)                            81 01
  USAGE PAGE (Digitizer Device Page)                05 0D
  USAGE (Finger)                                    09 22
  COLLECTION (Physical)                             A1 00
  USAGE (Tip Switch)                                09 42
  USAGE (Confidence)                                09 47
  REPORT COUNT (2)                                  95 02
  INPUT (Data,Var,Abs)                              81 02
  LOGICAL MAXIMUM (5)                               25 05
  USAGE (Transducer Index)                          09 38
  REPORT SIZE (6)                                   75 06
  REPORT COUNT (1)                                  95 01
  INPUT (Data,Var,Abs)                              81 02
  USAGE PAGE (Generic Desktop Page)                 05 01
  PHYSICAL MAXIMUM (921)                            46 99 03
  PHYSICAL MINIMUM (0)                              35 00
  LOGICAL MAXIMUM (1105)                            26 51 04
  REPORT SIZE (12)                                  75 0C
  UNIT EXPONENT (Unit Value x .01)                  55 0E
  GLOBAL UNIT (Distance in centimeters)             65 11
  USAGE (X)                                         09 30
  INPUT (Data,Var,Abs)                              81 02
  PHYSICAL MAXIMUM (506)                            46 FA 01
  LOGICAL MAXIMUM (607)                             26 5F 02
  USAGE (Y)                                         09 31
  INPUT (Data,Var,Abs)                              81 02
  END COLLECTION (Physical)                         C0
  USAGE PAGE (Digitizer Device Page)                05 0D
```

```
USAGE (Finger)                          09 22
COLLECTION (PHYSICAL)                   A1 00
LOGICAL MAXIMUM (1)                     25 01
USAGE (Tip Switch)                      09 42
USAGE (Confidence)                      09 47
REPORT SIZE (1)                         75 01
REPORT COUNT (2)                        95 02
INPUT (Data,Var,Abs)                    81 02
USAGE (Transducer Index)                09 38
LOGICAL MAXIMUM (5)                     25 05
REPORT SIZE (6)                         75 06
REPORT COUNT (1)                        95 01
INPUT (Data,Var,Abs)                    81 02
USAGE PAGE (Generic Desktop Page)       05 01
PHYSICAL MAXIMUM (921)                  46 99 03
LOGICAL MAXIMUM (1105)                  26 51 04
REPORT SIZE (12)                        75 0C
USAGE (X)                               09 30
INPUT (Data,Var,Abs)                    81 02
PHYSICAL MAXIMUM (506)                  46 FA 01
LOGICAL MAXIMUM (607)                   26 5F 02
USAGE (Y)                               09 31
INPUT (Data,Var,Abs)                    81 02
END COLLECTION (Physical)               C0
USAGE PAGE (Digitizer Device Page)      05 0D
USAGE (Finger)                          09 22
COLLECTION (Physical)                   A1 00
LOGICAL MAXIMUM (1)                     25 01
USAGE (Tip Switch)                      09 42
USAGE (Confidence)                      09 47
REPORT SIZE (1)                         75 01
REPORT COUNT (2)                        95 02
INPUT (Data,Var,Abs)                    81 02
USAGE (Transducer Index)                09 38
LOGICAL MAXIMUM (5)                     25 05
REPORT SIZE (6)                         75 06
REPORT COUNT (1)                        95 01
INPUT (Data,Var,Abs)                    81 02
USAGE PAGE (Generic Desktop Page)       05 01
PHYSICAL MAXIMUM (921)                  46 99 03
LOGICAL MAXIMUM (1105)                  26 51 04
REPORT SIZE (12)                        75 0C
USAGE (X)                               09 30
INPUT (Data,Var,Abs)                    81 02
PHYSICAL MAXIMUM (506)                  46 FA 01
LOGICAL MAXIMUM (607)                   26 5F 02
USAGE (Y)                               09 31
INPUT (Data,Var,Abs)                    81 02
END COLLECTION (PHYSICAL)               C0
USAGE PAGE (Digitizer Device Page)      05 0D
USAGE (Finger)                          09 22
COLLECTION (PHYSICAL)                   A1 00
LOGICAL MAXIMUM (1)                     25 01
```

2023/10/10 | 版权所有 © 2023 Apple Inc. 保留所有权利。

```
  USAGE (Tip Switch)                    09 42
  USAGE (Confidence)                    09 47
  REPORT SIZE (1)                       75 01
  REPORT COUNT (2)                      95 02
  INPUT (Data,Var,Abs)                  81 02
  USAGE (Transducer Index)              09 38
  LOGICAL MAXIMUM (5)                   25 05
  REPORT SIZE (6)                       75 06
  REPORT COUNT (1)                      95 01
  INPUT (Data,Var,Abs)                  81 02
  USAGE PAGE (Generic Desktop Page)     05 01
  PHYSICAL MAXIMUM (921)                46 99 03
  LOGICAL MAXIMUM (1105)                26 51 04
  REPORT SIZE (12)                      75 0C
  USAGE (X)                             09 30
  INPUT (Data,Var,Abs)                  81 02
  PHYSICAL MAXIMUM (506)                46 FA 01
  LOGICAL MAXIMUM (607)                 26 5F 02
  USAGE (Y)                             09 31
  INPUT (Data,Var,Abs)                  81 02
  END COLLECTION (Physical)             C0
  USAGE PAGE (Digitizer Device Page)    05 0D
  USAGE (Finger)                        09 22
  COLLECTION (PHYSICAL)                 A1 00
  LOGICAL MAXIMUM (1)                   25 01
  USAGE (Tip Switch)                    09 42
  USAGE (Confidence)                    09 47
  REPORT SIZE (1)                       75 01
  REPORT COUNT (2)                      95 02
  INPUT (Data,Var,Abs)                  81 02
  USAGE (Transducer Index)              09 38
  LOGICAL MAXIMUM (5)                   25 05
  REPORT SIZE (6)                       75 06
  REPORT COUNT (1)                      95 01
  INPUT (Data,Var,Abs)                  81 02
  USAGE PAGE (Generic Desktop Page)     05 01
  PHYSICAL MAXIMUM (921)                46 99 03
  LOGICAL MAXIMUM (1105)                26 51 04
  REPORT SIZE (12)                      75 0C
  USAGE (X)                             09 30
  INPUT (Data,Var,Abs)                  81 02
  PHYSICAL MAXIMUM (506)                46 FA 01
  LOGICAL MAXIMUM (607)                 26 5F 02
  USAGE (Y)                             09 31
  INPUT (Data,Var,Abs)                  81 02
  END COLLECTION (Physical)             C0
END COLLECTION (Application)            C0
```

15.2.2 触控板示例 [英语]

在 60 Hz 的配件触控板中进行以下 HID 报告，这个触控板使用 HID 报告描述符示例（第 86 页）：

1. 配件触控板表面有两个触点。

```
03000000 0300100F 0700C016 00000000 00000000 00000000
```

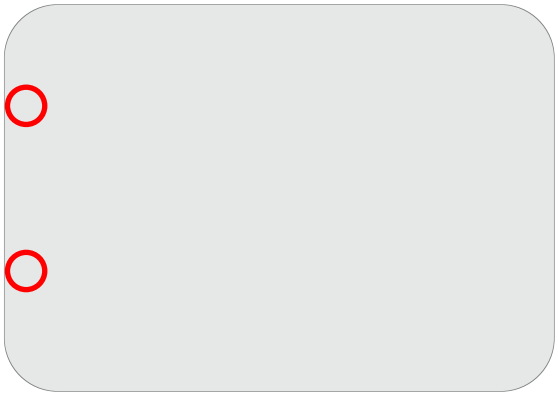

2. 两个触点沿着 X 轴同时移动。

```
03A70000 0314110F 0714C116 00000000 00000000 00000000
```

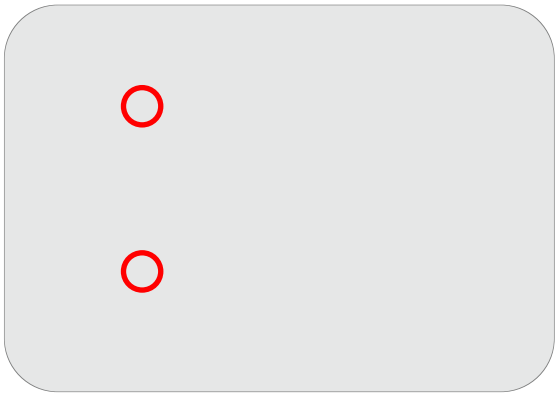

3. 两个触点持续移动，直到到达数字转换器表面的中心位置。

```
034E0100 0328120F 0728C216 00000000 00000000 00000000
```

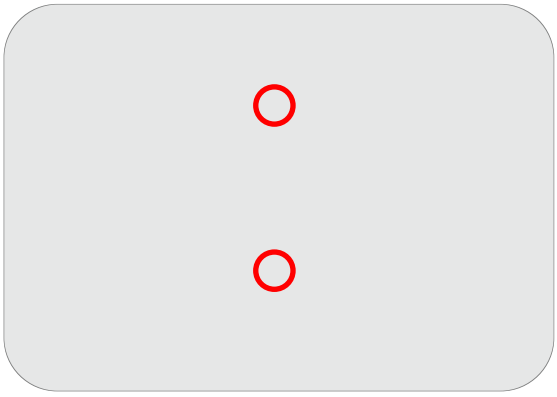

4. 移除一个触点。移除的触点的置信度仍为 1，它的坐标没有改变。

```
03F50100 0328120F 0628C216 00000000 00000000 00000000
```

2023/10/10 | 版权所有 © 2023 Apple Inc. 保留所有权利。

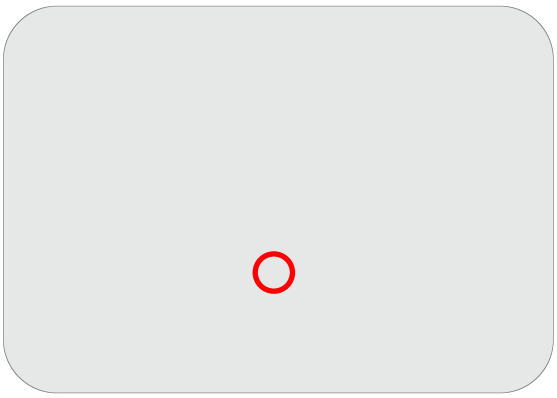

5. 剩下的触点移动到数字转换器表面的正中央。移除的触点的置信度和坐标现在为 0。
```
039C0200 0328F212 00000000 00000000 00000000 00000000
```

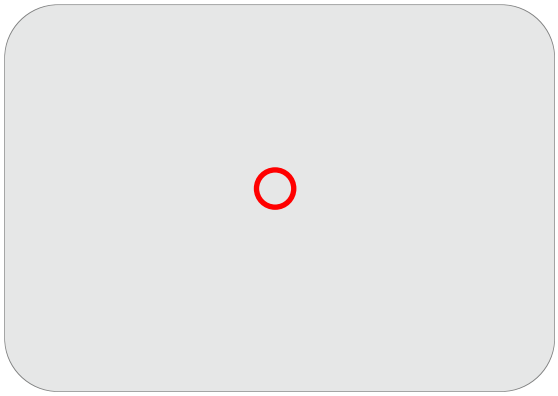

6. 点按按钮 1。
```
03430301 0328F212 00000000 00000000 000000000 0000000
```

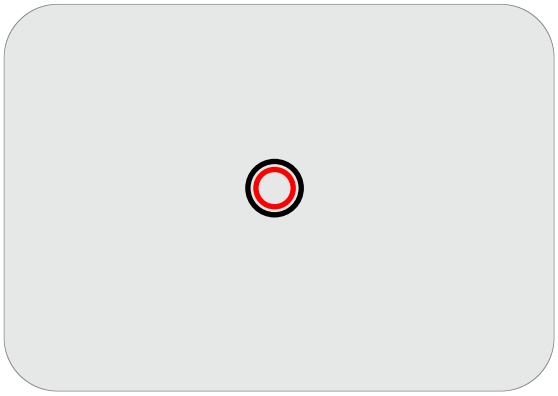

7. 取消点按按钮 1，移除触点。移除的触点的置信度仍为 1，它的坐标没有改变。
```
03EA0300 0228F212 00000000 00000000 00000000 00000000
```

2023/10/10 | 版权所有 © 2023 Apple Inc. 保留所有权利。

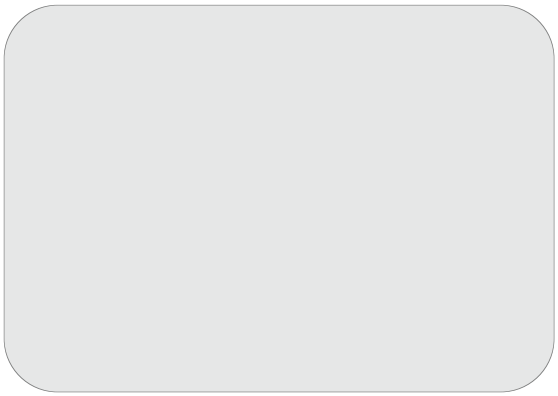

2023/10/10 | 版权所有 © 2023 Apple Inc. 保留所有权利。

16. 外部存储

[英语]

设备通过支持 USB 驱动器和 SD 卡读卡器等外部存储来实现以下用途：

- 存储和访问外部文件。
- 导入和导出照片。
- 录制视频。

16.1 要求

[英语]

配件可能支持通过以下方式将数据移入或移出设备：

- “USB 大容量存储类规范概述 1.4 版 (*USB Mass Storage Class Specification Overview, Version 1.4*)”，详见 https://www.usb.org/document-library/mass-storage-class-specification-overview-14。
- 外部配件协议（第 133 页）。

16.2 ProRes 4K（最高 60 fps）

[英语]

为了支持在 4K 下拍摄 ProRes 视频（最高 60 fps）并存储到外部 USB 存储器，配件应该：

- 保持至少 220 MB/s 的写入速度。
- 维持写入速度，直到 USB 存储器达到容量上限。
- 任何时间点的电流消耗均不得超过 900 mA。请参见“配件供电 (USB-C)（第 115 页）”。

17. AirPods 配件

[英语]

配件不得干扰 AirPods 的运行。避开区域可在设备尺寸图中找到，详见：

- AirPods Pro（第 2 代）（第 440 页）。
- AirPods（第 3 代）（第 442 页）。
- AirPods Pro（第 1 代）（第 444 页）。
- AirPods（第 1 代）和 AirPods（第 2 代）（第 446 页）。

17.1 充电盒盖

[英语]

充电盒盖应：

- 不干扰 AirPods 充电盒操作。
- 在金属避开区域具有均匀的厚度。
- 厚度不超过 2.5 mm。Apple 建议使用 1.0 mm 厚度以最大程度地兼容感应式发射器。

避开区域可在设备尺寸图中找到，详见：

- 适用于 AirPods Pro（第 2 代）的 MagSafe 充电盒 (USB-C) 1/3（第 434 页）。
- 适用于 AirPods Pro（第 2 代）的 MagSafe 充电盒 1/3（第 437 页）。
- 适用于 AirPods（第 3 代）的 MagSafe 充电盒（第 441 页）。
- 适用于 AirPods Pro（第 1 代）的无线充电盒（第 443 页）。
- 适用于 AirPods 的无线充电盒（第 445 页）。

声称与 Apple Watch 充电器兼容的保护壳不得遮挡 Apple Watch 充电器避开区域，详见：

- 适用于 AirPods Pro（第 2 代）的 MagSafe 充电盒 (USB-C) 2/3（第 435 页）。
- 适用于 AirPods Pro（第 2 代）的 MagSafe 充电盒 2/3（第 438 页）。

17.2 充电器

[英语]

充电配件应与所有充电盒在物理上兼容。

如果充电配件集成了：

- 闪电接头，则应满足“设备供电（闪电）（第 125 页）”中与 iPhone/iPod 相关的要求。
- 感应式发射器，则应满足“设备供电（感应式）（第 129 页）”中的要求。

2023/10/10 | 版权所有 © 2023 Apple Inc. 保留所有权利。

17.3 测试规程 [英语]

AirPods 配件的测试规程。

17.3.1 电源 [英语]

AirPods 充电盒盖的电源测试规程。

17.3.1.1 器材 [英语]

执行电源测试规程所需的器材：

- AirPods。
- AirPods 充电盒。
- AirPods 充电盒盖。
- Apple MagSafe 充电器。
- 运行 iOS 17.0 或更高版本的设备。

17.3.1.2 测试环境和设置 [英语]

1. 将 AirPods 插入充电盒。
2. 解锁设备并打开充电盒盒盖。
3. 如有必要，将 AirPods 与设备配对。
4. 使用设备，验证以下情况的充电状态：
   a. 充电盒电量低于 80%。
   b. AirPods 电量低于 50%。
5. 合上充电盒盒盖。
6. 确认 MagSafe 充电器插入工作正常的电源。
7. 在平整表面上将充电盒放在 MagSafe 充电器上。
8. 确认充电盒 LED 指示灯会即刻亮起。
9. 监控充电盒 LED 指示灯 30 秒并确认 LED 指示灯熄灭。
10. 轻点充电盒并确认 LED 指示灯会即刻亮起。

17.3.1.3 MagSafe 充电 [英语]

1. 将配件连接到 AirPods 充电盒。
2. 在平整表面上将充电盒和连接的配件放在 MagSafe 充电器上。
3. 确认充电盒 LED 指示灯会即刻亮起。
4. 监控充电盒 LED 指示灯 30 秒并确认 LED 指示灯熄灭。
5. 轻点充电盒并确认 LED 指示灯会即刻亮起。

2023/10/10 | 版权所有 © 2023 Apple Inc. 保留所有权利。

18. 表带

[英语]

设计良好的表带应能牢固地连接 Apple Watch，而不会干扰 Apple Watch 的使用。请参阅“设备尺寸图（第 232 页）”，以了解 Apple Watch 的尺寸图及规定的避开区域。

18.1 要求

[英语]

适用于 Apple Watch 的表带应集成两个与 Apple Watch 表带接口（第 98 页）契合的凸耳。Apple Watch 采用高精度接口规范，如需二维凸耳规范示例，请参阅 https://developer.apple.com/accessories/apple-watch-lug-profile.zip。凸耳应能通过“耳闩”功能锁定在表带卡槽里，从而防止表带被意外移除。

表带和凸耳的外露边缘应该通过 UL 1439 设备锐边测试和 BS EN 71-1:2014“玩具安全 - 机械和物理性能 (*Safety of Toys - Mechanical and physical properties*)”。

耳闩绝不应卡在延伸位置。

表带不应集成磁性充电器。

表带和凸耳应当满足以下条件：

- 通过 ASTM B117 中规定的 72 小时盐雾试验，而没有明显的腐蚀迹象。
- 装在 Apple Watch 上时，能够耐受 5-20 kgf 横向侧滑力。
- 能够耐受 ISO-6245:1996“Specifications for Diver's Watches”（潜水手表规格）中第 7.3 节规定的 20 kgf 或以上拉力。
- 可在按下表带脱卸按钮时轻松从 Apple Watch 上卸下。
- 充分考虑 Apple Watch 的重量。

表带应使用户能够与 Apple Watch 心率传感器和 Apple Watch 背面保持直接皮肤接触，并且应该充分考虑表带材料的变形或尺寸变化。否则可能会干扰 Apple Watch 手腕检测和 Apple Pay 功能。表带应：

- 长度调节间距小于 7 mm（中心到中心）。
- 调节空间充足，确保用户能够戴紧而又感到舒服，从而防止 Apple Watch 相对佩戴者的皮肤出现移动。

运动型表带应能在各种类型的运动中保持手表紧密贴合皮肤，从而保证 Apple Watch 心率传感器可以正常工作。

Apple 建议凸耳部分采用以下材料：

- 邵尔 A 型硬度为 75 的硅胶。
- 50-55% 玻璃纤维尼龙。

- 240-270HV 316L/EN 1.4435 不锈钢。

Apple 建议耳闩部分采用以下材料：
- 50-55% 玻璃纤维尼龙。
- 240-270HV 316L/EN 1.4435 不锈钢。

Apple Watch 的表带应该遵守表带销售所在地的适用环保法规以及任何适用的物质或材料限制，包括针对以下物质的适用限制：
- 有机锡化合物、全氟辛烷磺酸 (PFOS)、全氟辛酸 (PFOA)、邻苯二甲酸盐、偶氮染料、多溴化联苯 (PBB) 和多环芳烃 (PAH)（根据欧盟 REACh 法规 EC 1907/2006 的要求）。
- 表面上长时间接触皮肤的镍浸出率（根据欧盟 REACh 法规 EC 1907/2006 的要求）。
- 镉、铅、六价铬和镍（根据欧盟指令 2009/48/EC 的要求）。
- 天然胶乳（根据欧盟指令 EC 93/42/EEC 的要求）。
- 富马酸二甲酯 (DMFu)（根据欧盟法规 412/2012 的要求）。
- pH 值和甲醛（根据中国纺织品强制性要求 GB 18401 和中国皮革强制性要求 GB 20400）。
- 产品或包装中的濒危动植物用料（美国雷斯法案）。
- 多溴联苯醚 (PBDE)。

2023/10/10 | 版权所有 © 2023 Apple Inc. 保留所有权利。

REV	ECO#	DESCRIPTION OF REVISION

NOTES:

1. EXPOSED EDGES MUST CONFORM TO UL 1439: TESTS FOR SHARPNESS OF EDGES ON EQUIPMENT AND BS EN71-1: SAFETY OF TOYS.
2. EDGES MUST BE FREE FROM BURRS/FLASH
3. SEE LUG PROFILE CAD ON APPLE DEVELOPER WEBSITE

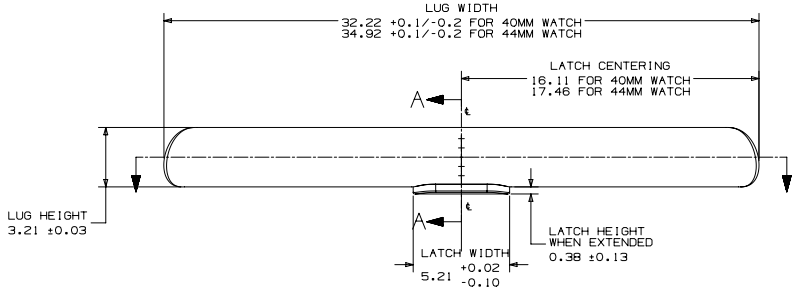

LATCH EXTENDED

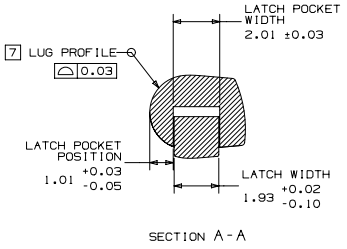

SECTION A-A

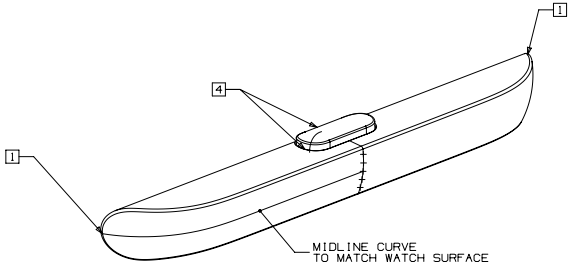

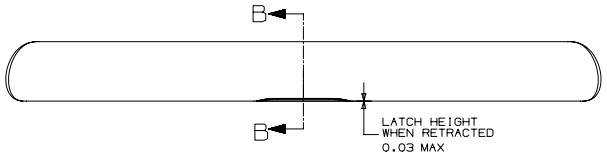

LATCH RETRACTED

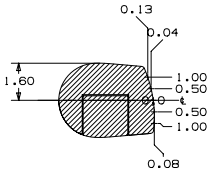

SECTION B-B

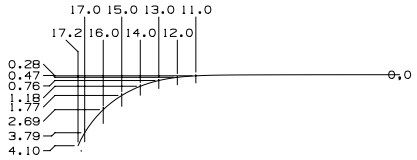

CURVE AT LUG MIDLINE, 44MM WATCH

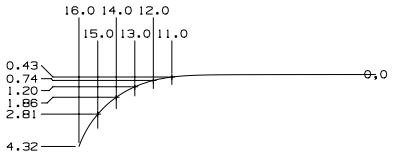

CURVE AT LUG MIDLINE, 40MM WATCH

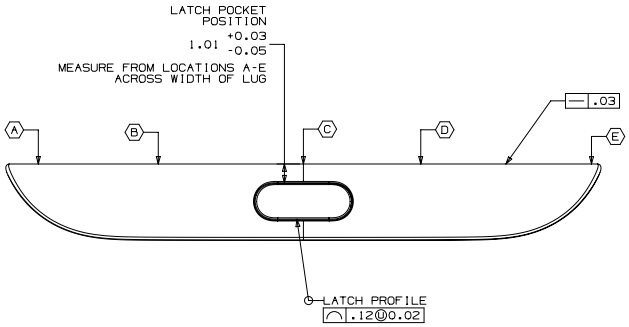

METRIC	Apple Inc.
DRAFTER: APPLE INC. — DATE: 09/21/18	NOTICE OF PROPRIETARY PROPERTY: THE INFORMATION CONTAINED HEREIN IS THE PROPRIETARY PROPERTY OF APPLE INC. THE POSSESSOR AGREES TO THE FOLLOWING: (i) TO MAINTAIN THIS DOCUMENT IN CONFIDENCE (ii) NOT TO REPRODUCE OR COPY IT (iii) NOT TO REVEAL OR PUBLISH IT IN WHOLE OR PART (iv) ALL RIGHTS RESERVED
DESIGNER: APPLE INC. — DATE: 09/21/18	
DIMENSIONS ARE IN MILLIMETERS TOLERANCES	TITLE: APPLE WATCH BAND INTERFACE
DO NOT SCALE DRAWINGS	DRAWING NUMBER — REV. 01
THIRD ANGLE PROJECTION — SIZE D — SCALE NONE — SHT 1 OF 1	

NX GENERATED

18.3 Apple Watch 凸耳组合部件示例 [英语]

组装说明基于 Apple Watch 凸耳示例（第 101 页）和带有夹持机构的组装支架。

凸耳的正确组装对于确保表带牢固连接 Apple Watch 至关重要。如果组装不当，可能导致 Apple Watch 和/或表带出现损坏。

螺纹应使用 Loctite 435 固定。不得重复使用以前安装/使用的螺丝。

组装支架应能牢牢固定凸耳组合部件，而夹持机构应能在插入螺丝期间压住凸耳。

如下所示组装表带和凸耳，详见图 18-1（第 100 页）。

1. 轻轻地将母销的较长一端插入表带，直到停下来为止。确保表带上没有包裹物或损坏。
2. 轻轻地从表带的另一侧插入销钉的较长一端，直到与母销互锁并拼在一起。确保表带上没有包裹物或损坏。
3. 将凸耳底部的小孔与母销和销钉裸露在外的一端对齐。请注意耳闩顶部/底部相对于表带的方向。耳闩应该位于表带靠近手腕的一侧。
4. 在螺纹上涂上 Loctite 435 胶水。
5. 使用下列规格安装这两颗螺丝：
   - 扭矩：1.1 kgf-cm ±10%
   - RPM：120 ±10%
6. 在 1200-1400 勒克斯下目视检查螺丝有没有突出和螺纹错扣。
7. 确保螺丝稍稍嵌到扩孔的最下部分并与凸耳的长轴平行。
8. 确保螺丝完好无损、平整且与扩孔同心。

2023/10/10 | 版权所有 © 2023 Apple Inc. 保留所有权利。

图 **18-1** Apple Watch 凸耳组装支架

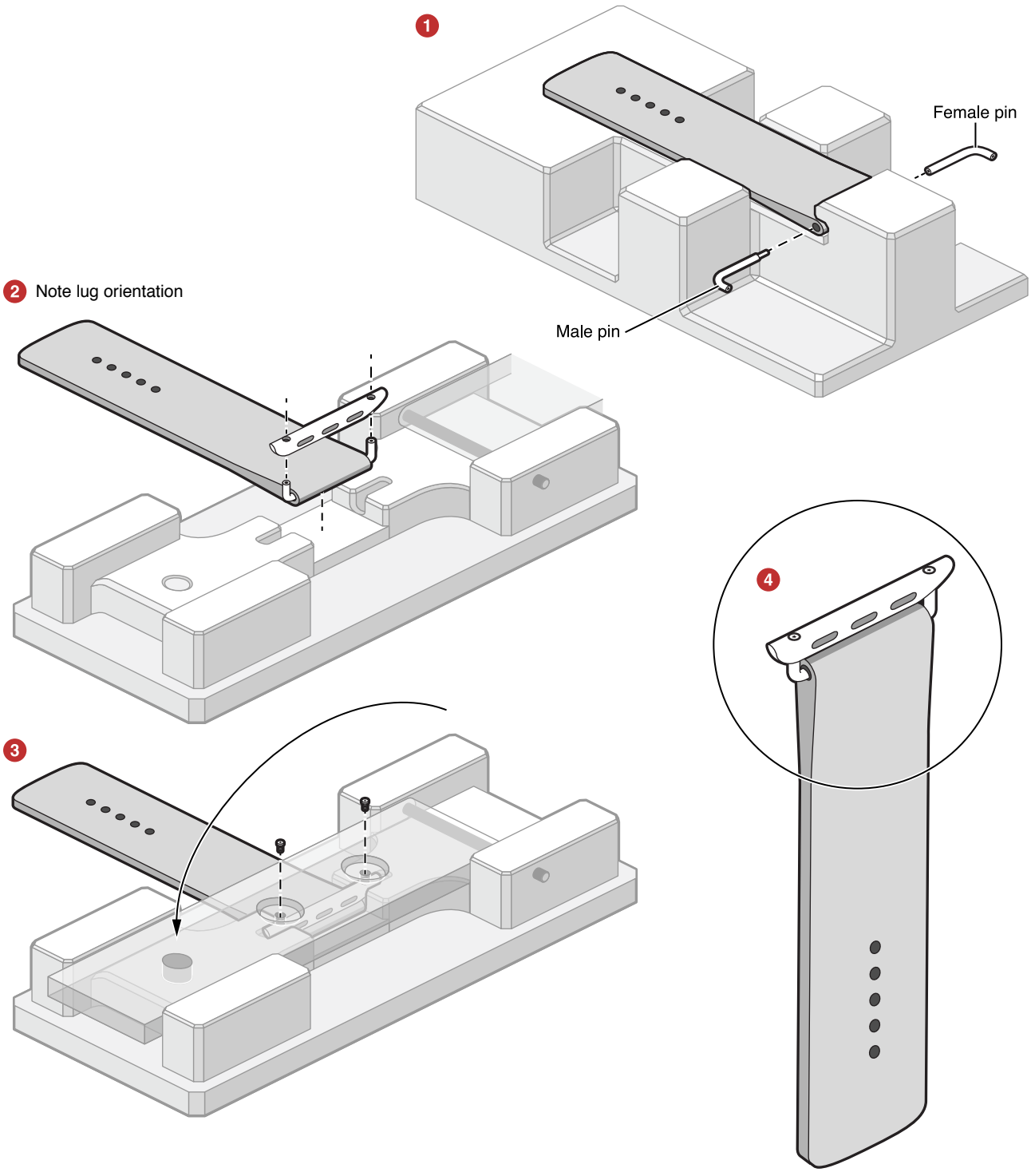

18.4 Apple Watch 凸耳示例

[英语]

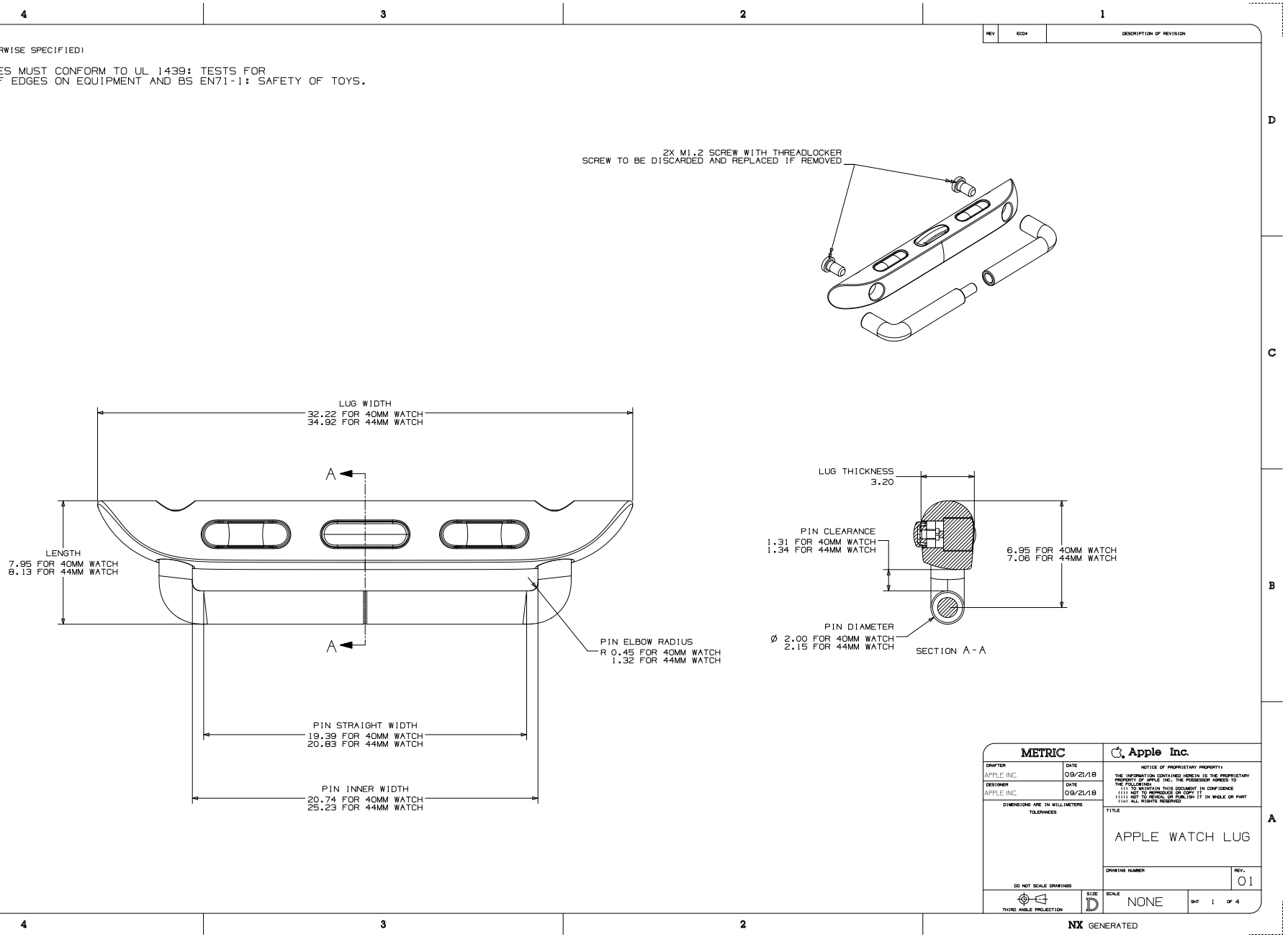

19. 待机显示支架

[英语]

待机显示为 iPhone 用户提供了快速浏览信息的全屏查看体验，用户可在 iPhone 处于横向放置、屏幕锁定且正在充电时在一段距离的情况下查看信息。待机显示可通过个性化设置来显示一系列小工具，并且支持显示实时活动、Siri、来电和通知。待机显示可以记住用户使用 MagSafe 时的首选视图。

这项功能仅在 iOS 17.0 或更高版本上受支持。

图 19-1　待机显示示例

19.1 产品设计

[英语]

图 19-2 待机显示支架示例

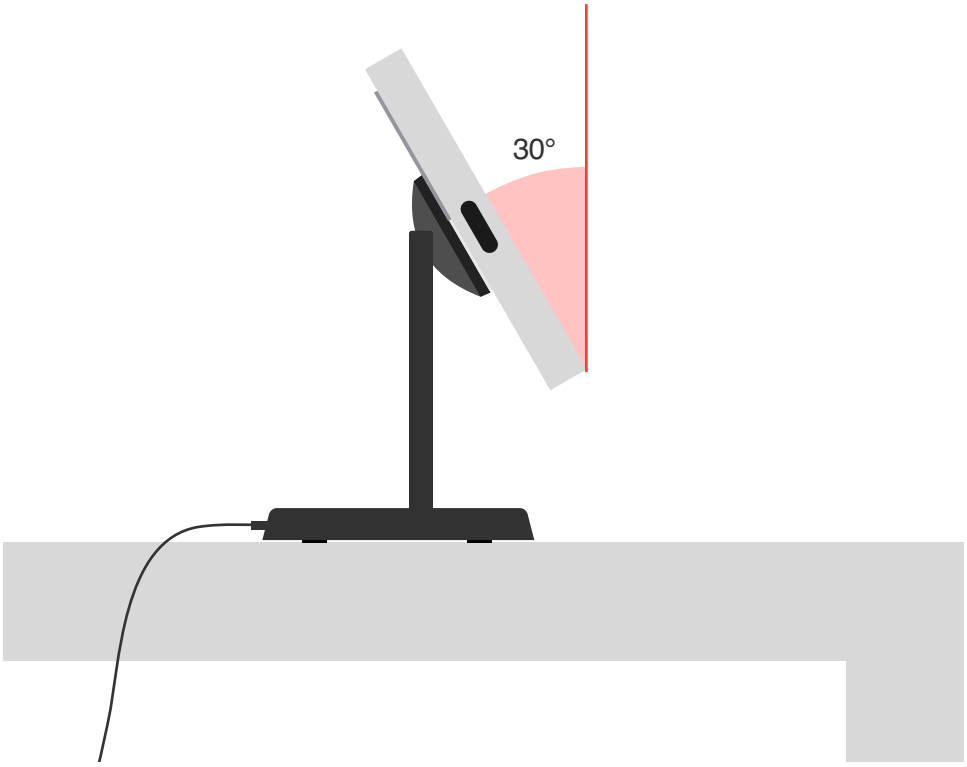

待机显示支架：

- 应支持横向放置。
- 应支持感应充电或有线充电。
- 不得遮挡或接触设备玻璃盖板或任何设备传感器。
- 不得造成刮伤和损坏（第 25 页）。
- 应防止设备自由旋转。
- 应支持至少 30° 的后倾调节，以获得最佳可见度。
- 应保持稳定，以防止无意间退出待机显示。
- 不应妨碍操作控件（第 32 页）。
- 应实施 MagSafe 配件磁铁阵列（第 146 页）。

2023/10/10 | 版权所有 © 2023 Apple Inc. 保留所有权利。

19.2 测试规程 [英语]

19.2.1 器材 [英语]

需要以下器材：

- 运行 iOS 17.0 或更高版本的受支持设备。
- 充电器（如果配件中未集成）。

19.2.2 启用待机显示 [英语]

1. 将锁屏状态的设备横向安放到配件上。
2. 如果配件没有集成感应充电或有线充电功能，则连接一个充电器。
3. 验证设备是否在几秒内进入待机显示。

19.2.3 产品设计 [英语]

验证待机显示支架：

1. 支持横向放置。
2. 不遮挡或接触设备玻璃盖板或任何设备传感器。
3. 不会刮伤或损坏设备。

2023/10/10 | 版权所有 © 2023 Apple Inc. 保留所有权利。

20. 连续互通相机支架

[英语]

连续互通相机使设备摄像头可以与 Apple TV 或 Mac 搭配使用，并支持“人像”模式、“摄影室灯光”、“人物居中”和“桌上视角”视频效果。请参阅 https://support.apple.com/zh-cn/HT213244 以了解更多信息。此功能在 iOS 16.0、iPadOS 16.0、macOS 13.0 Ventura、Apple tvOS 17.0 或更高版本中以及 Apple TV 4K（第 2 代）或更新机型上受到支持。

连续互通相机支架可将设备固定在最佳高度和角度，以便与 FaceTime 通话和其他 App 结合使用。

图 20-1 连续互通相机 MacBook“桌上视角”示例

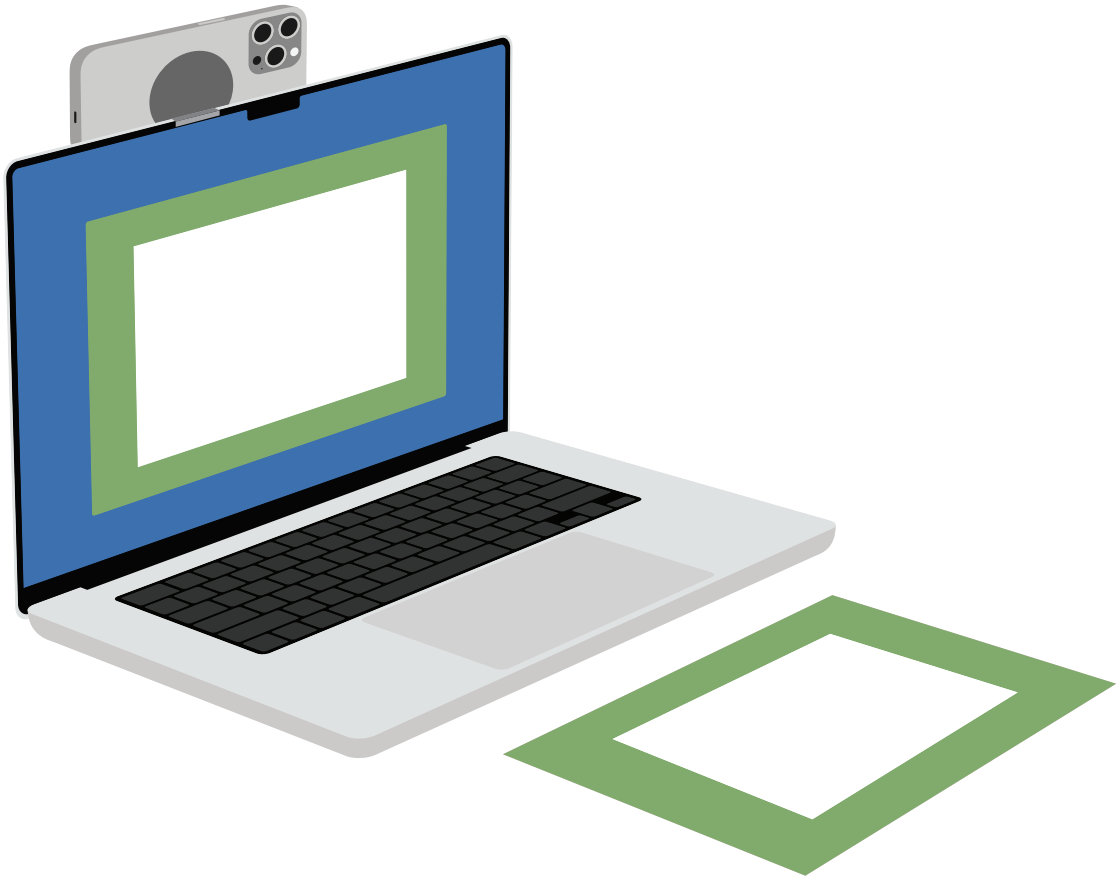

下列设备支持“人物居中”和“桌上视角”：

- iPhone 15 Pro Max

2023/10/10 | 版权所有 © 2023 Apple Inc. 保留所有权利。

- iPhone 15 Pro
- iPhone 15 Plus
- iPhone 15
- iPhone 14 Pro Max
- iPhone 14 Pro
- iPhone 14 Plus
- iPhone 14
- iPhone 13 Pro Max
- iPhone 13 Pro
- iPhone 13
- iPhone 13 mini
- iPhone 12 Pro Max
- iPhone 12 Pro
- iPhone 12
- iPhone 12 mini
- iPhone 11 Pro Max
- iPhone 11 Pro
- iPhone 11

iPhone 12 或更新机型（包括 iPhone SE（第 3 代））支持“摄影室灯光”。

iPhone XR 或更新机型支持将设备作为网络摄像头和“人像”模式。

20.1 产品设计 [英语]

连续互通相机支架：

- 应支持纵向和横向的设备。
- 应允许使用 USB-C 连接线或闪电转 USB 充电/同步连接线。
- 不得接触设备防护玻璃、遮挡任何设备摄像头视野或阻碍任何环境光传感器，请参见“设备尺寸图（第 232 页）”。
- 不得造成刮伤和损坏（第 25 页）。
- 应防止设备自由旋转。
- 应使设备摄像头镜头高度至少为 228 mm 以支持“桌上视角”。
- 不应妨碍操作控件（第 32 页）。
- 应实施 MagSafe 配件磁铁阵列（第 146 页）。
- 应支持三脚架连接（第 30 页）。

以下情景中使用的连续互通相机支架还有附加要求：

- Apple TV 支架（第 107 页）
- MacBook 支架（第 108 页）

2023/10/10 | 版权所有 © 2023 Apple Inc. 保留所有权利。

- iMac 或显示器支架（第 109 页）

20.2 Apple TV 支架

[英语]

图 20-2 Apple TV 支架示例

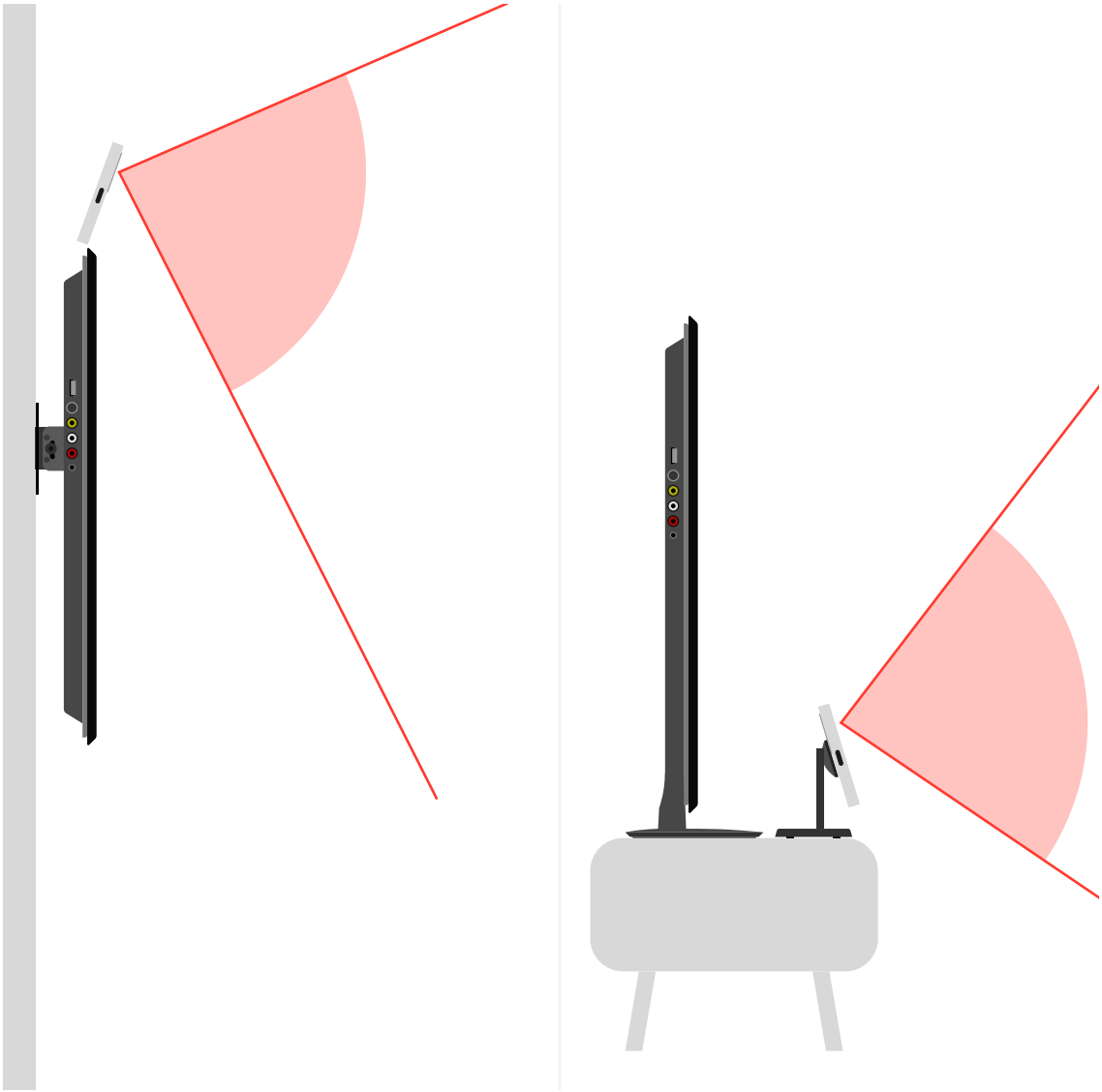

Apple TV 专用连续互通相机支架：

- 放置于电视机顶部或前方时应保持稳定。
- 不得接触显示屏玻璃（活动和非活动区域）。
- 不得将电视机和设备夹在一起或挤在一起。

- 应能够向上和向下倾斜。

20.3 MacBook 支架 [英语]

图 20-3 MacBook 支架示例

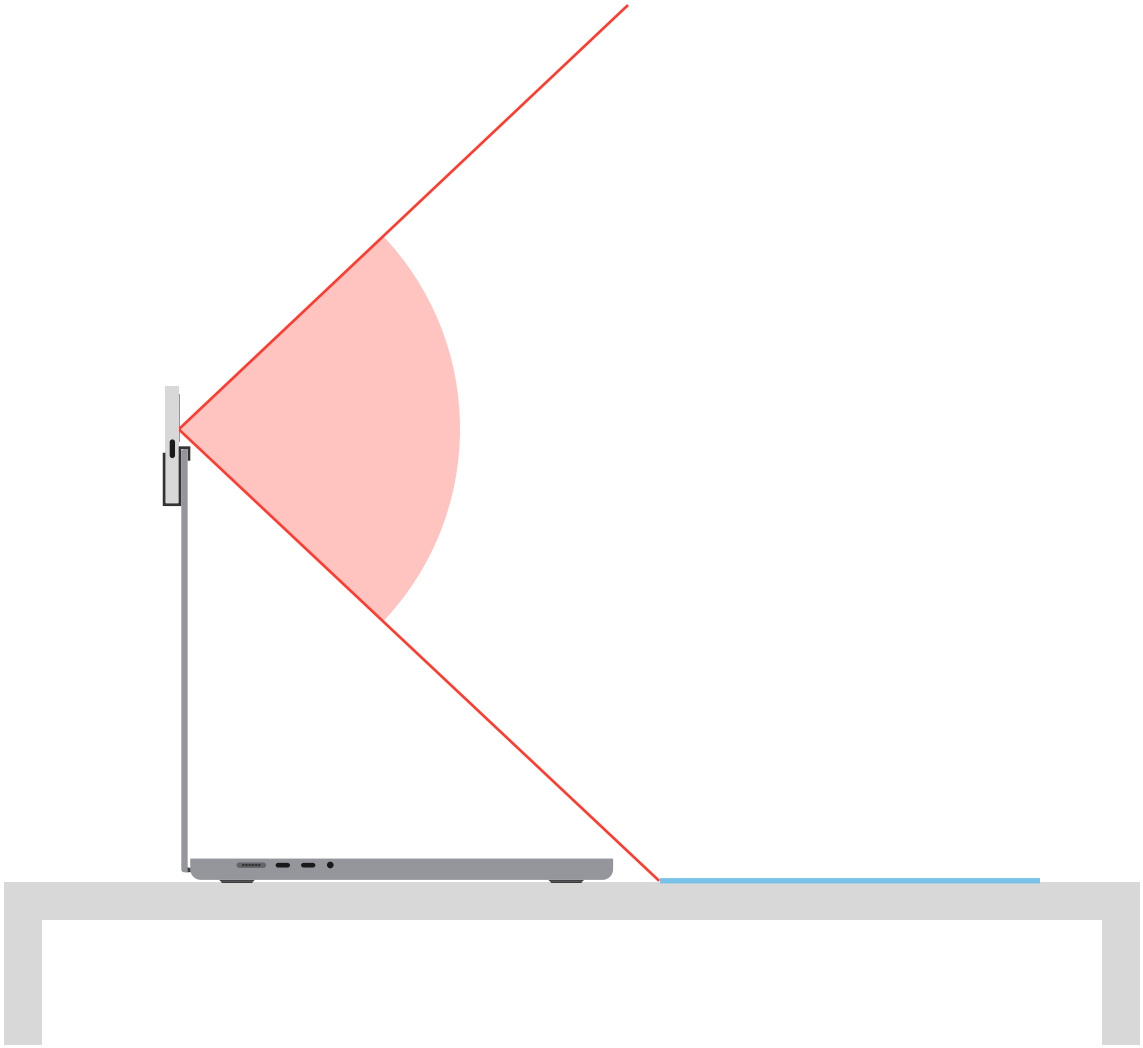

MacBook、MacBook Air 和 MacBook Pro 专用连续互通相机支架：

- 不得刮伤或损坏 MacBook。
- 不得接触 MacBook 显示屏玻璃（活动和非活动区域）。
- 不得干扰或阻止完全关闭 MacBook。
- 不得将 MacBook 和设备夹在一起或挤在一起。
- 不得覆盖或接触 MacBook 显示屏玻璃、摄像头或其他传感器的任何部分。

2023/10/10 | 版权所有 © 2023 Apple Inc. 保留所有权利。

- 应能够纵向向下倾斜 0° 至 12°，以支持“桌上视角”。
- 应尽量减少重量，以保持显示器的稳定性。

20.4 iMac 或显示器支架 [英语]

图 20-4 显示器支架示例

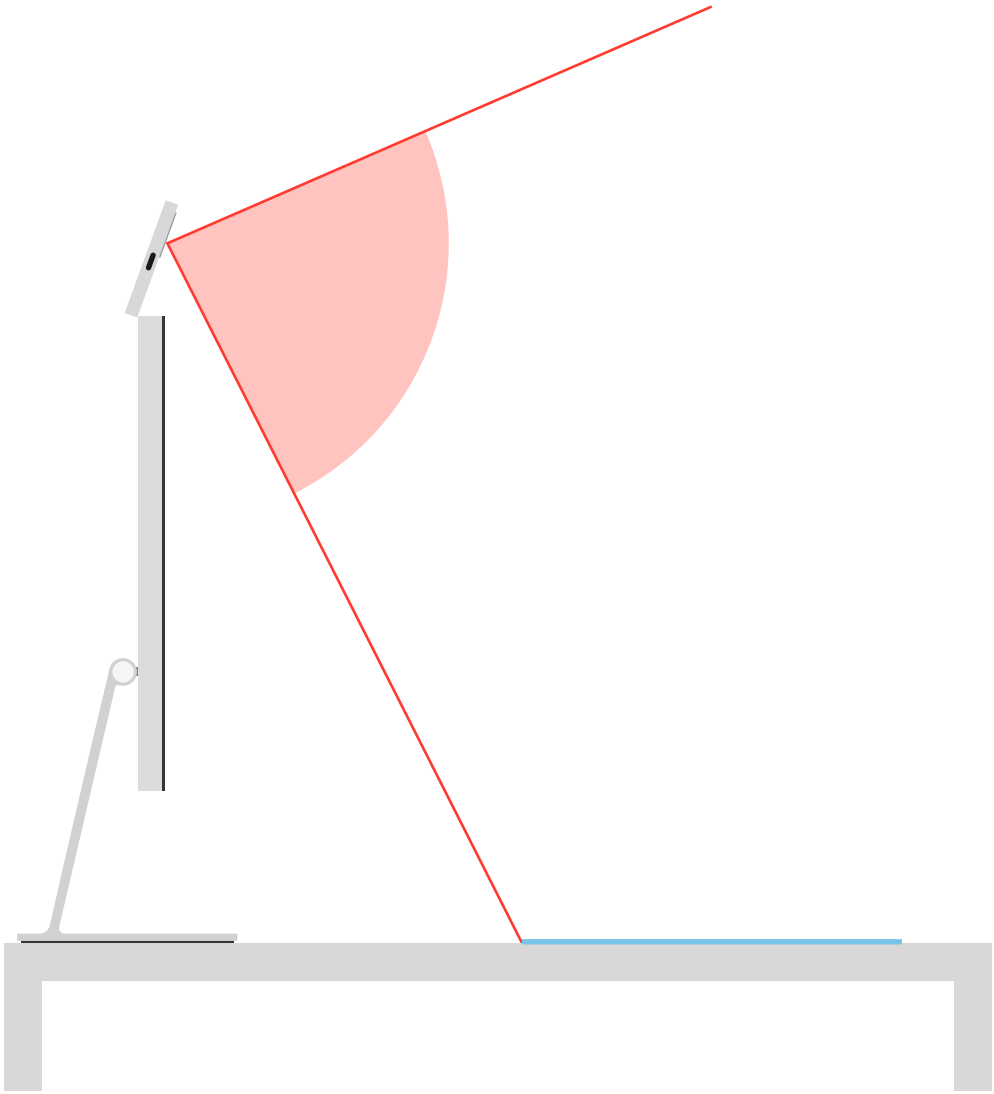

iMac 或显示器专用连续互通相机支架：

- 不得刮伤或损坏 iMac 或显示器。
- 不得接触显示屏玻璃（活动和非活动区域）。
- 不得将 iMac 或显示器和设备夹在一起或挤在一起。

2023/10/10 | 版权所有 © 2023 Apple Inc. 保留所有权利。

- 不得覆盖或接触显示屏玻璃、摄像头、麦克风或其他传感器的任何部分。
- 应能够向下倾斜 0° 至 30°，以支持“桌上视角”。

20.5 测试规程 [英语]

20.5.1 器材 [英语]

在此规程中执行测试需要以下器材：

- 运行 iOS 16.0 或更高版本的受支持设备。
- 如果支架是 Apple TV 专用：
  - Apple TV 4K（第 2 代）或更新机型，运行 Apple tvOS 17.0 或更新版本并连接了电视机。
- 如果支架是 Mac 专用：
  - 运行 macOS 13.0 Ventura 或更高版本的 Mac 电脑。
  - MacBook、MacBook Air 和 MacBook Pro（如果支架为 MacBook 专用）。
  - iMac（如果支架为 iMac 专用）。
  - 各种显示器（如果支架为外接显示器专用）。
  - USB-C 连接线。
  - 闪电转 USB 充电/同步连接线。
- 启用了双重认证的 Apple ID，在设备、Apple TV 和所有 Mac 电脑上使用。
- 三脚架（如果支架为三脚架连接专用）。

20.5.2 在 Apple TV 启用连续互通相机 [英语]

要配置 Apple TV 和设备以启用连续互通相机，请执行以下操作：

1. 在 Apple TV 上打开 FaceTime 通话。
2. 选择与设备上所用 Apple ID 相匹配的用户。
3. 在设备上，选择“连续互通相机”通知，再选择“接受”。
4. 将设备安放到连续互通相机支架上。
5. 连续互通相机视图将在 FaceTime 通话中显示。

20.5.3 在 Mac 上启用连续互通相机 [英语]

要配置 Mac 和设备以启用连续互通相机，请执行以下操作：

1. 使用连接线将设备连接到 Mac。
2. 如果 Mac 不是受信任电脑，请在设备上的“要信任此电脑吗？”提醒上选择“*信任*”。
3. 要以无线方式使用连续互通相机，请断开连接线。
4. 将设备安放到连续互通相机支架上。
5. 在 Mac 上打开 FaceTime 通话。
6. 如果出现“将 iPhone 用作 Mac 的摄像头”提醒，请选择“继续”。

2023/10/10 | 版权所有 © 2023 Apple Inc. 保留所有权利。

7. 从视频菜单中选择连续互通相机选项。
8. 连续互通相机视图将在 FaceTime 通话中显示。

要在 Mac 和/或设备处于睡眠模式后重新连接，请执行以下操作：
1. 唤醒设备和 Mac。
2. 如果是有线连接，请使用连接线将设备连接到 Mac；如果是无线连接，请断开连接线。
3. 将设备安放到连续互通相机支架上。
4. 在 Mac 上打开 FaceTime 通话，然后从视频菜单中选择连续互通相机。
5. 连续互通相机视图将在 FaceTime 通话中显示。

20.5.4 产品设计 [英语]

验证连续互通相机支架：
1. 支持纵向和横向。
2. 没有接触设备防护玻璃或遮挡任何设备摄像头视野。
3. 没有刮伤或损坏设备。
4. 设计为用于三脚架时，符合 ISO 1222:2010。

如果支架为 Apple TV 专用，请验证支架：
1. 放置于电视机顶部或前方时可保持稳定。
2. 没有接触显示屏玻璃。
3. 不会将电视机和设备夹在一起或挤在一起。

如果支架为 MacBook、iMac 或显示器专用，请验证支架：
1. 没有接触显示屏玻璃。
2. 没有遮挡任何 MacBook、iMac 或显示器摄像头视野。
3. 没有将设备、MacBook、iMac 或显示器夹在一起或挤在一起。
4. 没有刮伤或损坏设备、MacBook、iMac 或显示器。
5. 允许使用 USB-C 连接线或闪电转 USB 充电/同步连接线。

20.5.5 人物居中 [英语]

“人物居中”是 Mac 控制中心提供的一种视频效果。选择“视频效果”并启用“人物居中”将使视频在连续互通相机视野内跟随人物移动。视频将缩放（放大和缩小）和平移（从左到右、从右到左、向上和向下），以使人物保持在画面中。

1. 确保设备已登录到与 Mac 上相同的 Apple ID 账户。
2. 将设备放置在支架上，并放置在 MacBook、iMac、显示器、三脚架或独立支架上。
3. 在启用和不启用“人物居中”的情况下，使用 Photo Booth App 执行支架测试。
   a. 在 Mac 上打开 Photo Booth App，使用相机菜单选择连续互通相机。
   b. 使用静态照片模式。
4. 使用 Mac 控制中心菜单选择“视频效果”，然后启用“人物居中”。

2023/10/10 | 版权所有 © 2023 Apple Inc. 保留所有权利。

5. 使用“人物居中”面部跟踪，以纵向和横向从不同位置拍摄照片，每张照片之间等待 5 秒。
6. 使用 Mac 控制中心菜单选择“视频效果”，然后停用“人物居中”。
7. 以纵向和横向拍摄照片，每张照片之间等待 5 秒。
8. 使用 Photo Booth 胶卷功能，验证测试期间拍摄的所有照片：
   a. 都存储到电脑上。
   b. 查看时显示清晰。
   c. 无论是纵向还是横向，都没有因支架而造成的可见异常。

20.5.6 桌上视角 [英语]

“桌上视角”是 Mac 控制中心提供的一种视频效果。选择“视频效果”并启用“桌上视角”将显示一个确认对话框，然后打开一个单独的“桌上视角”窗口。连续互通相机支架的倾斜角度及其支架位置决定了“桌上视角”视野。根据需要调整倾斜角度以显示桌面主题。远程观众将从演讲者的角度看到主题。关闭“桌上视角”窗口将停用“桌上视角”。

1. 确保设备已登录到与 Mac 上相同的 Apple ID 账户。
2. 将设备放置在支架上，并放置在 MacBook、iMac、显示器、三脚架或独立支架上。
3. 在启用“桌上视角”视频效果的情况下，使用 FaceTime 通话 App 执行支架测试。
   a. 在 Mac 上打开 FaceTime 通话 App，使用视频菜单选择连续互通相机。
   b. 使用 Mac 控制中心菜单选择“视频效果”，然后启用“桌上视角”。
   c. 验证是不是显示了“桌上视角”窗口。
4. 在横向和纵向：
   a. 调整连续互通相机支架的倾斜角度，以在“桌上视角”窗口中显示桌面主题。
   b. 验证桌面主题在“桌上视角”窗口中是不是可见，并且是不是清晰显示。
   c. 验证在“桌上视角”窗口中有没有因支架而造成的可见异常。
   d. 验证在“桌上视角”显示桌面主题时，用户的面部在 FaceTime 通话中是不是仍然可见。

2023/10/10 | 版权所有 © 2023 Apple Inc. 保留所有权利。

功能

21. 蓝牙配件标识

[英语]

本章介绍 Apple 专有蓝牙命令，它们可以扩展配件功能，超越标准蓝牙描述文件所支持的功能。

要启用 Apple 专有功能，配件应该支持 HFP 命令 AT+XAPL（第 114 页），它提供有关配件所支持功能的准确信息。设备将利用这个命令发送的信息来启用和停用自定命令。

在与设备成功建立 HFP 服务级连接 (SLC) 后，配件应该发送以下 AT+XAPL 命令。在发送任何额外 Apple 专有命令之前，配件应当先发送 AT+XAPL 命令。请参见“Siri（第 163 页）”和“蓝牙耳机电池电量指示（第 122 页）”。

21.1 HFP 命令 AT+XAPL

[英语]

说明：从配件启用自定 AT 命令。

发起者：蓝牙配件

格式：AT+XAPL=*vendorID-productID-version,features*

参数：

- *vendorID*：一个字符串表示，用于显示制造商所提供供应商 ID 的十六进制值，不含 `0x` 前缀。
- *productID*：一个字符串表示，用于显示制造商所提供产品 ID 的十六进制值，不含 `0x` 前缀。
- *version*：软件版本。
- *features*：位域的十进制表示。可用的功能如下：
  - 位 0 = 保留
  - 位 1 = 配件支持电池报告（仅为使用电池供电的配件保留）。
  - 位 2 = 配件已对接或插接电源（仅为使用电池供电的配件保留）。
  - 位 3 = 配件支持 Siri 状态报告。
  - 位 4 = 配件支持降噪 (NR) 状态报告。
  - 所有其他值都保留。

示例：AT+XAPL=ABCD-1234-0100,10（支持电池报告和 Siri 状态）

响应：+XAPL=iPhone,*features*

22. 配件供电 (USB-C)

[英语]

配件供电适用于集成了 USB-C 接口的设备。

配件供电可以使配件从设备获得有限的电能，并避免需要集成电池或连接外部电源。这可让用户无需管理额外的配件电池，并保证只要设备有电，就能够正常使用配件。暂时连接至设备的配件比较适合使用配件供电功能。

从设备获得电能的配件应符合：

- USB Type-C 连接线和接口规范 2.2 版 (*USB Type-C Cable and Connector Specification, Release 2.2*)。
- USB 供电规范修订版 3.1，版本 1.3 (*USB Power Delivery Specification, Revision 3.1, Version 1.3*)（如果设备支持 USB 供电（第 182 页））。

可从配件电源功能受益的配件包括：

- 耳机。
- 转换器（第 69 页）。
- 键盘（第 78 页）。
- 外部存储（第 93 页）。

22.1 可用电流

[英语]

下表列出了可供配件使用的电流大小。

表格 22-1 可用电流

设备	默认	USB Type-C 电流（第 183 页）	USB 供电（第 182 页）
iPhone 15 Pro Max	900 mA	900 mA	900 mA (4.5 W)
iPhone 15 Pro	900 mA	900 mA	900 mA (4.5 W)
iPhone 15 Plus	500 mA	500 mA	900 mA (4.5 W)
iPhone 15	500 mA	500 mA	900 mA (4.5 W)
12.9 英寸 iPad Pro（第 6 代）	900 mA	3.0 A	3.0 A (15 W)
12.9 英寸 iPad Pro（第 5 代）	900 mA	3.0 A	3.0 A (15 W)
12.9 英寸 iPad Pro（第 4 代）	900 mA	1.5 A	1.5 A (7.5 W)
12.9 英寸 iPad Pro（第 3 代）	900 mA	1.5 A	1.5 A (7.5 W)
11 英寸 iPad Pro（第 4 代）	900 mA	3.0 A	3.0 A (15 W)

2023/10/10 | 版权所有 © 2023 Apple Inc. 保留所有权利。

设备	默认	USB Type-C 电流（第 183 页）	USB 供电（第 182 页）
11 英寸 iPad Pro（第 3 代）	900 mA	3.0 A	3.0 A (15 W)
11 英寸 iPad Pro（第 2 代）	900 mA	1.5 A	1.5 A (7.5 W)
11 英寸 iPad Pro（第 1 代）	900 mA	1.5 A	1.5 A (7.5 W)
iPad Air（第 5 代）	900 mA	1.5 A	1.5 A (7.5 W)
iPad Air（第 4 代）	900 mA	1.5 A	1.5 A (7.5 W)
iPad mini（第 6 代）	900 mA	1.5 A	1.5 A (7.5 W)
iPad（第 10 代）	500 mA	1.5 A	1.5 A (7.5 W)

22.2 快速角色转换 (FRS) [英语]

配有 USB-C 接口的 iPad 支持“USB 供电规范修订版 3.1，版本 1.3 (*USB Power Delivery Specification, Revision 3.1, Version 1.3*)”中定义的快速角色转换 (FRS) 功能。

22.3 测试规程 [英语]

22.3.1 最大配件功率 [英语]

这一测试规程适用于从设备获得电能的配件。配件需要以全功率状态运行。

此测试规程中的示例配件是一个外部 USB 3 驱动器，其声称可从 USB 3 主机获得高达 900 mA 的电流。该配件通过读写一个大型文件来接受测试。请按照不同的配件类型，根据需要调整此规程。

22.3.1.1 器材 [英语]

需要以下器材：

- 采用 APFS 格式的外部 USB 驱动器（示例配件）。
- 配备 USB-C 接口的 Mac。
- USB-IF 认证的 USB-C 至 USB-C 全功能连接线。
- 配备电流探针的示波器。
- USB-C 分线板（如果需要）。

22.3.1.2 设置 [英语]

1. 使用电流探针，将示波器连接到配件的电流环路或 USB-C 分线板。
2. 验证示波器配置设置是否符合以下要求：
   a. 采样：>5 M 样本/秒。
   b. 电流通道：200 mA/格。

c. 水平通道：100 µs/格。
d. 电压通道：1 V/格，带宽受限。
e. 无限持续（在每一测试案例前重置）。
f. 向下调整偏移量，以便能够查看 7 格。
g. 向左调整偏移量，以最大化窗口。
h. 触发：电流通道，正阈值，900 mA，普通模式。

3. 使用 USB-C 连接线，将 Mac 连接到外部 USB 驱动器。
4. 在 Mac 上启动“终端”，并输入以下命令：
   - `dd if=/dev/random of=~/Desktop/testfile.dat count=1024 bs=78643200`
5. 新文件 `~/Desktop/testfile.dat` 是用于测试的文件。

22.3.1.3 测试案例 [英语]

22.3.1.3.1 枚举 [英语]

1. 在 Mac 系统报告中测试外部 USB 驱动器是否枚举完整：
   a. 选择 Apple 菜单 > “关于本机”。
   b. 选择“更多信息...”。
   c. 选择“系统报告...”。
   d. 从边栏中选择“USB”。
2. 验证配件是否显示在 USB 设备树中。
3. 验证所显示的速度是否为如下之一：
   a. 最高 5 Gb/s。
   b. 最高 10 Gb/s。

22.3.1.3.2 闲置 [英语]

1. 记录闲置时的最大电流。
2. 验证最大电流是否没有超过 900 mA。

22.3.1.3.3 写入 USB 驱动器 [英语]

1. 使用“访达”，将 `testfile.dat` 从 Mac 拷贝到 USB 驱动器上。
2. 记录最大电流。
3. 验证最大电流是否没有超过 900 mA。

22.3.1.3.4 从 USB 驱动器读取 [英语]

1. 使用“访达”，将 `testfile.dat` 从 USB 驱动器拷贝到 Mac 上。
2. 记录最大电流。
3. 验证最大电流是否没有超过 900 mA。

2023/10/10 | 版权所有 © 2023 Apple Inc. 保留所有权利。

23. 配件供电（闪电）

[英语]

配件供电可以使配件从设备获得有限的电能，并避免需要集成电池或连接外部电源。这可让用户无需管理额外的配件电池，并保证只要设备有电，就能够正常使用配件。暂时连接至设备的配件比较适合使用配件供电功能。

有关更多信息，请参阅“配件接口规范（第 22 页）”。

2023/10/10 | 版权所有 © 2023 Apple Inc. 保留所有权利。

24. App 发现

[英语]

“App 发现”功能使配件能够在设备上检索已安装并可与配件通信的 App 的列表。请参阅“App 启动（第 120 页）”以了解如何利用这个列表。

有关更多信息，请参阅“配件接口规范（第 22 页）”。

2023/10/10 | 版权所有 © 2023 Apple Inc. 保留所有权利。

25. App 启动

[英语]

支持“App 启动”功能的配件可以请求设备代表它启动某个 App。

图 25-1　App 启动提醒

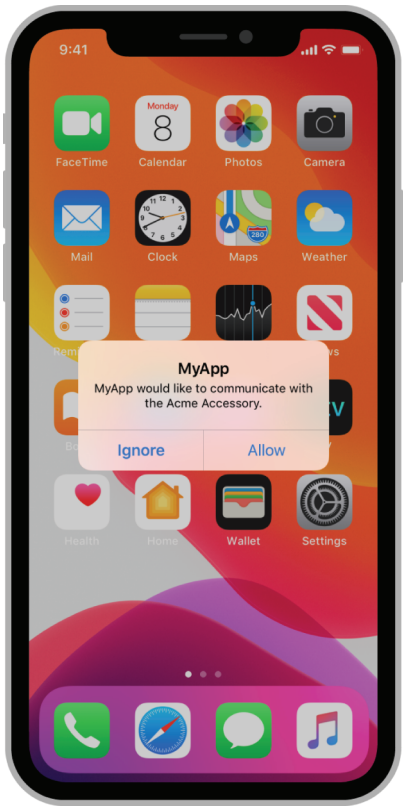

有关更多信息，请参阅“配件接口规范（第 22 页）”。

26. App 匹配

[英语]

“App 匹配”功能让支持外部配件协议功能的配件能够与 App Store 上的兼容 App 匹配。

首次连接配件时，设备会询问用户是否要访问 App Store 并查看兼容的 App。之后，用户可以使用*“设置”>“通用”>“关于”>“配件名称”>“查找此配件的 App”*再次进行这一操作。

匹配的 App 会按照字母顺序列出，但有一个例外。如果配件兼容来自多个开发团队/公司的 App，配件可以提供一个首选团队 ID，使来自对应首选团队的 App 显示在列表顶部。

图 26-1　App 匹配提醒

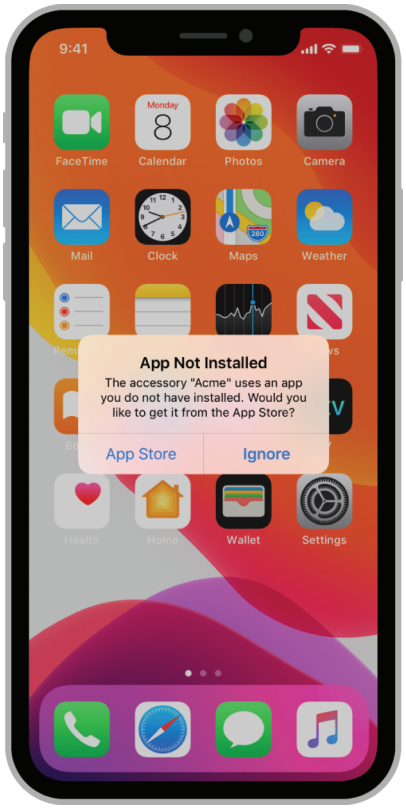

有关更多信息，请参阅“配件接口规范（第 22 页）”。

2023/10/10 | 版权所有 © 2023 Apple Inc. 保留所有权利。

27. 蓝牙耳机电池电量指示

[英语]

任何免提蓝牙耳机配件都可以通过设备状态栏中的指示器图标，向用户显示自身的电池电量。所有支持免提描述文件的设备（包括 iPhone、iPod touch 和 iPad）都支持这项功能。

耳机电池指示通过两个 Apple 专有蓝牙 HFP AT 命令来实现：HFP 命令 AT+XAPL（第 114 页） 和 HFP 命令 AT+IPHONEACCEV（第 122 页）

27.1 HFP 命令 AT+IPHONEACCEV

[英语]

说明：报告耳机状态更改。

发起者：耳机配件

格式：`AT+IPHONEACCEV=`*Number of key/value pairs*`,`*key1*`,`*val1*`,`*key2*`,`*val2*`,...`

参数：

- *Number of key/value pairs*：其后参数的数量。
- *key*：报告的更改类型：
  - 1 = 电池电量
  - 2 = 对接状态
- *val*：更改的值：
  - 电池电量：字符串值介于“0”和“9”之间
  - 对接状态：0 = 未对接，1 = 已对接

示例：`AT+IPHONEACCEV=1,1,3`

版权所有 © 2023 Apple Inc. 保留所有权利。

28. 设备供电 (USB-C)

[英语]

配件可以通过 USB-C 向设备提供电能。

Apple 建议尽可能为设备供电，以提供最佳用户体验。

为设备供电的配件应该符合：

- 通过集成的 USB-C 插头（第 221 页）或 USB-C 连接线连接到设备。
- 使用 USB Type-C 电流（第 183 页）来识别其供电能力，并使用 USB 供电（第 182 页）来提供更高的电功率，详见 https://support.apple.com/zh-cn/HT208137。
- 能够一直供电，除非用户直接将配件置于“关闭”状态。如果无法一直供电，可能会导致配件不能为电池电量过低的设备充电，从而导致无法启动。

配件可以结合使用 iAP2（第 187 页）协议和 USB Type-C 电流（第 183 页），这允许在初次连接后更加细致地控制可用电流。在结合使用 USB 供电（第 182 页）时，配件不可使用 iAP2（第 187 页）来调整可用电流。

对于通过 USB-C 插口供电的配件，请参见“供电（第 225 页）”。

28.1 外部电源

[英语]

如果配件采用外部电源来为设备提供所需的全部或部分电能，则应：

- 识别电源的供电能力并相应地向设备进行报告。
- 不可操控设备，使得设备从外部电源获得的电能超过直接连接外部电源时正常消耗的电能。
- 根据配件的功耗降低可用的功率（如果适用）。

如果配件从外部电源获得电能，当电源不可用或仅供电能力下降（例如来自内部电池）时可用，或者当用户将配件从外部电源（例如，交流电源适配器或交流“市电”电源插座）拔下时，配件可能会通知设备。当用户重新连接外部电源时，设备供电应该恢复，并且应该将更新的供电能力更改情况告知设备。

请参见“交流电源适配器（第 71 页）”、“集成式 USB 插口（第 25 页）”和“用户提供的连接线和交流电源适配器（第 25 页）”，以了解特定于外部 USB 电源/连接线的其他要求。

28.2 电源状态更改

[英语]

配件不应改变向设备供电的功率，除非属于以下情况：

- 用户直接打开或关闭配件。
- 外部电源（例如市电或电池）连接到配件或与配件断开连接。
- 配件的内部电源（例如电池）耗尽或负载达到无法再提供所声明供电能力的状态，或者现在可提供的电能超过之前声明的水平。

版权所有 © 2023 Apple Inc. 保留所有权利。

29. 设备供电（闪电）

[英语]

配件可以通过闪电连接向设备提供电能。

Apple 建议尽可能为设备供电，以提供最佳用户体验。

为设备供电的配件应该通过集成式闪电接头或USB转闪电连接线连接到设备。要整合集成式闪电接头，配件开发者应该加入 Apple MFi 许可计划（第 23 页）。

为设备供电的配件应该符合下列任一条件：

- 提供直接电源，详见“直接电源（第 125 页）”。
- 管理外部电源，详见“外部电源（第 125 页）”。

无法与设备进行数据通信的配件都应该为设备提供直接电源，详见“直接电源（第 125 页）”。

29.1 直接电源

[英语]

直接供电的配件应该能一直供电，除非用户直接将配件置于“关闭”状态。如果无法一直供电，可能会导致配件不能为电池电量过低的设备充电，从而导致无法启动。

所有配件电源测试应通过可编程负载而非设备来进行。设备功耗会因环境因素而变化。

29.2 外部电源

[英语]

如果配件采用外部电源来为设备提供所需的全部或部分电能：

- 应识别电源的供电能力并相应地向设备进行报告。
- 不得操控设备，使得设备从外部电源获得的电能超过直接连接外部电源时正常消耗的电能。
- 不得操控设备，使得设备从外部电源获得的电能少于配件兼容性声明所述的最低电能要求（如果有），详见“使用 USB 接口供电（第 126 页）”。

如果配件从外部电源获得电能，当电源不可用或仅供电能力下降（例如来自内部电池）时可用，或者当用户将配件从外部电源（例如，交流电源适配器或交流“市电”电源插座）拔下时，配件可能会通知设备。当用户重新连接外部电源时，设备供电应该恢复，并且应该将更新的供电能力更改情况告知设备。

请参见“交流电源适配器（第 71 页）”、“集成式 USB 插口（第 25 页）”和“用户提供的连接线和交流电源适配器（第 25 页）”，以了解特定于外部 USB 电源/连接线的其他要求。

29.3 声明供电能力 [英语]

如果配件使用以下方式供电：

- USB-A 插口，它应该使用下列协议之一声明供电能力：
  - USB 供电能力供应商请求（第 178 页）。
  - USB D+/D- 电阻网络（第 179 页）。
- USB-C 插口，则：
  - 它应该使用下列协议之一声明供电能力：
    - USB Type-C 电流（第 183 页）。
    - USB 供电（第 182 页）。
  - 如果配件无法与设备进行数据通信，则它还应该支持“USB 电池充电规范 1.2 版 (*USB Battery Charging Specification, Release 1.2*)”。

29.4 使用 USB 接口供电 [英语]

配件通过以下插口供电：

- USB-C 插口，详见“USB-C 插口（第 224 页）”。
- USB-A 插口，详见“USB-A 插口（第 220 页）”。

29.5 为多个接口添加标签 [英语]

如果配件包含多个具有不同设备兼容性的接口，兼容 iPad 的接口应该标有“iPad”字样，除非在物理上无法将 iPad 连接到兼容 iPhone/iPod 的接口。

29.6 iPhone 快速充电 (20 W) [英语]

声称可以为 iPhone 快速充电 (https://support.apple.com/zh-cn/HT208137) 的配件应符合下列条件：

- 支持 USB 供电（第 182 页）。
- 使用 USB PD 时提供至少 20 W（9 V 条件下提供 2.22 A 电流）功率。
- 声称与以下至少一种 iPhone 机型兼容：
  - iPhone 14 Pro Max
  - iPhone 14 Pro
  - iPhone 14 Plus
  - iPhone 14
  - iPhone SE（第 3 代）
  - iPhone 13 Pro Max
  - iPhone 13 Pro

- iPhone 13
- iPhone 13 mini
- iPhone 12 Pro Max
- iPhone 12 Pro
- iPhone 12
- iPhone 12 mini
- iPhone SE（第 2 代）
- iPhone 11 Pro Max
- iPhone 11 Pro
- iPhone 11
- iPhone XS Max
- iPhone XS
- iPhone XR
- iPhone X
- iPhone 8 Plus
- iPhone 8

充电线等配件应该能够支持最高 60 W（3 A，20 V），以便兼容各种不同的电源和设备。

29.7 过流和短路保护 [英语]

图 29-1 过流和短路保护

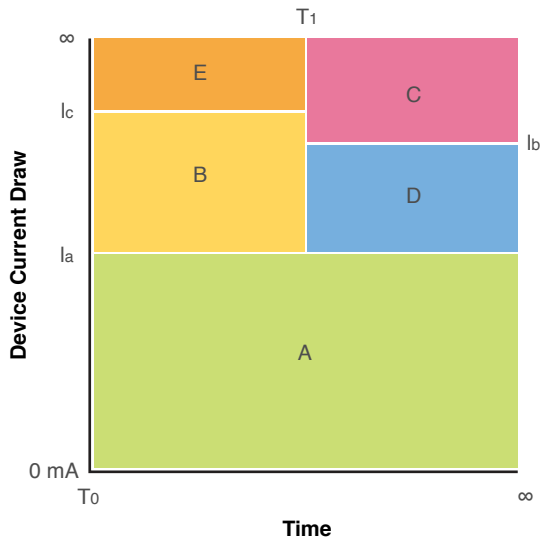

供电配件应该根据表格 29-1（第 128 页）、表格 29-2（第 128 页）和表格 29-3（第 128 页），针对图 29-1（第 127 页）中的每个区域实施过流和短路保护。

表格 29-1 过流/短路保护电流阈值

阈值	定义
I_a	标称配件输出电流（例如 1000 mA、2100 mA、2400 mA、3000 mA）。
I_b	I_a + 60%。
I_c	将导致配件输出电压（在闪电设备供电时测量）降至 2 V 以下的最低设备电流。

表格 29-2 过流/短路保护时间阈值

阈值	定义
T_0	任何设备电流瞬变的开始时间。
T_1	配件过流/短路抗尖峰脉冲/防抖时间，应该 ≥ T_0 + 1 ms。

表格 29-3 过流/短路保护行为

区域	名称	配件行为
A	正常工作	配件不应限制或关闭输出电流。
B	过流瞬变	配件不应关闭输出电流。配件可以将输出电流限制为 I_a 或更高。
C	过流	配件应该关闭输出电流。
D	潜在过流	配件可以关闭输出电流。
E	潜在短路	如果闪电设备供电电压降至 2 V 以下，配件可以触发短路保护。配件不应对设备电流触发短路保护。

29.8 过流和短路保护重置 [英语]

配件过流和短路保护应该能在没有机械干预的情况下重置。

29.9 电源状态更改 [英语]

配件不应改变向设备供电的功率，除非属于以下情况：

- 用户直接打开或关闭配件。
- 外部电源（例如市电或电池）连接到配件或与配件断开连接。
- 配件的内部电源（例如电池）耗尽或负载达到无法再提供所声明供电能力的状态，或者现在可提供的电能超过之前声明的水平。

30. 设备供电（感应式）

[英语]

配件可以使用感应式功率发射器为设备供电，具体如下：

- Qi 无线充电（第 129 页）
- MagSafe（第 130 页）

30.1 Qi 无线充电

[英语]

下列设备支持 Qi 无线充电（第 129 页）：

- iPhone 15 Pro Max
- iPhone 15 Pro
- iPhone 15 Plus
- iPhone 15
- iPhone 14 Pro Max
- iPhone 14 Pro
- iPhone 14 Plus
- iPhone 14
- iPhone SE（第 3 代）
- iPhone 13 Pro Max
- iPhone 13 Pro
- iPhone 13
- iPhone 13 mini
- iPhone 12 Pro Max
- iPhone 12 Pro
- iPhone 12
- iPhone 12 mini
- iPhone SE（第 2 代）
- iPhone 11 Pro Max
- iPhone 11 Pro
- iPhone 11
- iPhone XS Max
- iPhone XS
- iPhone XR
- iPhone X
- iPhone 8 Plus

2023/10/10 | 版权所有 © 2023 Apple Inc. 保留所有权利。

- iPhone 8
- 适用于 AirPods Pro（第 2 代）的 MagSafe 充电盒 (USB-C)
- 适用于 AirPods Pro（第 2 代）的 MagSafe 充电盒
- 适用于 AirPods（第 3 代）的 MagSafe 充电盒
- 适用于 AirPods 的无线充电盒

如果配件配备 Qi 发射器，则应该使用嵌入式 Qi 认证子系统，或根据“Qi 无线输电系统 - 功率 0 级规范”(*The Qi Wireless Power Transfer System, Power Class 0 Specification*) 版本 1.2.4 进行 Qi 认证，详见 https://www.wirelesspowerconsortium.com。

30.2 MagSafe

[英语]

下列设备支持 MagSafe：

- iPhone 15 Pro Max
- iPhone 15 Pro
- iPhone 15 Plus
- iPhone 15
- iPhone 14 Pro Max
- iPhone 14 Pro
- iPhone 14 Plus
- iPhone 14
- iPhone 13 Pro Max
- iPhone 13 Pro
- iPhone 13
- iPhone 13 mini
- iPhone 12 Pro Max
- iPhone 12 Pro
- iPhone 12
- iPhone 12 mini
- 适用于 AirPods Pro（第 2 代）的 MagSafe 充电盒 (USB-C)
- 适用于 AirPods Pro（第 2 代）的 MagSafe 充电盒
- 适用于 AirPods（第 3 代）的 MagSafe 充电盒

有关 MagSafe 的信息，请参阅“配件接口规范（第 22 页）”。

30.3 电磁兼容性 (EMC)

[英语]

为设备感应式供电的配件应设计为具有电磁兼容性。

版权所有 © 2023 Apple Inc. 保留所有权利。

Apple 建议屏蔽充电线圈中的磁场，并保持连接线终端的低阻抗屏蔽，以符合完整产品的 EMC 监管要求。具体实施细节、最终合规性测试、报告准备和标签注明等由推广和生产相关产品的公司负责。

连接线终端对于降低辐射至关重要。连接线终端和接头应远离充电线圈，并且充电线在布放时应远离充电表面。

如果存在辐射情况，在连接线上加装钳式铁氧体/吸波胶带则有助于降低辐射。所选的铁氧体/吸波胶带材料应符合失效频率的额定值。

根据配件支持的用例，应使用下列相应电源进行测试：

- Apple USB-C 电源适配器：
  - Apple 140W USB-C 电源适配器
  - Apple 96W USB-C 电源适配器
  - Apple 70W USB-C 电源适配器
  - Apple 67W USB-C 电源适配器
  - Apple 30W USB-C 电源适配器
  - Apple 20W USB-C 电源适配器
  - Apple 35W 双 USB-C 端口小型电源适配器
  - Apple 35W 双 USB-C 端口电源适配器
- Apple USB-A 电源适配器：
  - Apple 12W USB 电源适配器
  - Apple 5W USB 电源适配器
    - 型号 A1385（美国）
    - 型号 A1400（国际）
    - 型号 A1552（英国）
    - 型号 A1443（中国大陆）
    - 型号 A1444（澳大利亚）
    - 型号 A1486（巴西）
    - 型号 A1487（韩国）
    - 型号 A1501（阿根廷）
- Apple Mac 电脑：
  - Apple MacBook Pro
  - Apple MacBook Air

如果所使用的电源与上方列出的不同，则应在相应电源处于打开状态时进行辐射测试。

除了上述用例，还应对处于闲置模式的充电设备进行测试，以检查是否存在辐射。

进行辐射测试时，应遵循以下法规中引用的标准：

- FCC CFR 第 47 章，第 15 部分
- ICES-003 第 5 版，CAN/CSA-CEI/IEC CISPR 22-10
- CISPR 22：2008
- EN 55022：2010

2023/10/10 | 版权所有 © 2023 Apple Inc. 保留所有权利。

- AS/NZS CISPR 22:2009，TCVN 7189:2009
- VCCI V-3/2013.04
- GB 9254-2008，GB 17625.1-2012，GB 17625.2-2007，CNS 13438-2006
- CISPR 24：2010
- EN 55024：2010

一旦确定最高的辐射量组合，应当据此配置进行完整的测试。某些监管领域可能要求 EMC 认证。

2023/10/10 | 版权所有 © 2023 Apple Inc. 保留所有权利。

31. 外部配件协议

[英语]

外部配件 (EA) 框架通过提供读/写字节流接口，使配件能够利用 EA 会话与一个或多个 App 通信。配件开发者可以指定应用程序和配件之间的自定义协议。配件与应用程序之间通信协议的设计和维护完全由配件和应用程序开发者负责。如需有关外部配件框架的文稿，请访问 https://developer.apple.com/documentation/externalaccessory。

有关更多信息，请参阅“配件接口规范（第 22 页）”。

2023/10/10 | 版权所有 © 2023 Apple Inc. 保留所有权利。

32. HID 耳机遥控器 [英语]

设备可以接受来自耳机的用户输入，以控制音频音量和媒体播放。

32.1 要求 [英语]

实现 HID 耳机遥控的配件应该：

- 使用以下方法之一来连接到设备：
  - USB-C 插头（第 221 页）。
  - 蓝牙（第 191 页）。

HID 耳机遥控器应支持人机接口设备 (HID)（第 188 页） 协议。

耳机的 HID 报告描述符应声明支持 HID 消费者和/或电话页面，并且仅发送表 32-1（第 134 页） 和表 32-2（第 134 页） 中的用法。

表格 32-1 耳机遥控器使用的 HID 消费者页面 (0x0C) 控件

用法 ID	用法名称	Apple 功能
0x00B5	扫描下一个曲目	右移
0x00B6	扫描上一个曲目	左移
0x00B9	随机播放	随机播放
0x00BC	重复	重复
0x00E2	静音	静音
0x00E9	音量提高	调高音量
0x00EA	音量降低	调低音量
0x025B	提升	播放更多类似歌曲
0x025C	降低	减少播放类似歌曲

表格 32-2 耳机遥控器使用的 HID 电话页面 (0x0B) 控件

用法 ID	用法名称	Apple 功能
0x0021	闪光	中心

如果用户按住与“右移”或“左移”功能相对应的配件控制表面，设备可能会在当前播放的媒体项目中向前或向后滑动。配件不应向用户提供单独的“快进”或“快退”控制表面来实现相同的功能。

32.2 示例 [英语]

32.2.1 耳机遥控器 HID 报告描述符示例（电话） [英语]

以下示例 HID 描述符演示了如何实现电话和音量控制。

```
USAGE_PAGE (Consumer Devices) 05 0C
USAGE (Consumer Control)      09 01
COLLECTION (Application)      A1 01
  LOGICAL_MINIMUM (0)         15 00
  LOGICAL_MAXIMUM (1)         25 01
  REPORT_SIZE (1)             75 01
  REPORT_COUNT (2)            95 02
  USAGE (Volume Increment)    09 E9    // Volume Up
  USAGE (Volume Decrement)    09 EA    // Volume Down
  INPUT (Data,Var,Abs)        81 02
  USAGE_PAGE (Telephony)      05 0B
  REPORT_COUNT (1)            95 01
  USAGE (Flash)               09 21    // Center
  INPUT (Data,Var,Abs)        81 02
  REPORT_SIZE (5)             75 05
  REPORT_COUNT (1)            95 01
  INPUT (Cnst, Var, Abs)      81 03
END_COLLECTION                C0
```

每一报告是一个字节，每个位对应一项功能。例如，以下示例报告传达了所述按钮已被按下：

- 调高音量是 `0x01`
- 调低音量是 `0x02`
- 中心按钮是 `0x04`

32.2.2 耳机遥控器 HID 报告描述符示例（媒体播放） [英语]

以下示例 HID 描述符演示了如何实现媒体播放控制。

```
USAGE PAGE (Consumer Devices) 05 0C
USAGE (Consumer Control)      09 01
COLLECTION (Application)      A1 01
  LOGICAL MINIMUM (0)         15 00
  LOGICAL MAXIMUM (1)         25 01
  REPORT SIZE (1)             75 01
  REPORT COUNT (7)            95 07
  USAGE (Scan Next Track)     09 B5    // Transport Right
  USAGE (Scan Previous Track) 09 B6    // Transport Left
  USAGE (Mute)                09 E2    // Mute
  USAGE (Shuffle)             09 B9    // Shuffle
  USAGE (Repeat)              09 BC    // Repeat
  USAGE (Promote)             0A 5B 02 // Play More Like This
  USAGE (Demote)              0A 5C 02 // Play Less Like This
```

```
  INPUT (Data,Var,Abs)        81 02
END COLLECTION                C0
```

每一报告是一个字节，每个位对应一项功能。例如，以下示例报告传达了所述按钮已被按下：

- 右移是 0x01
- 左移是 0x02
- 静音是 0x04

32.2.3 耳机遥控器 HID 报告描述符示例（电话和媒体播放） [英语]

以下示例 HID 描述符演示了如何实现所有可能的媒体播放控制以及 Apple 耳机遥控器上的相同控制。

```
USAGE_PAGE (Consumer Devices) 05 0C
USAGE (Consumer Control)      09 01
COLLECTION (Application)      A1 01
  LOGICAL_MINIMUM (0)         15 00
  LOGICAL_MAXIMUM (1)         25 01
  REPORT_SIZE (1)             75 01
  REPORT_COUNT (9)            95 09
  USAGE (Scan Next Track)     09 B5    // Transport Right
  USAGE (Scan Previous Track) 09 B6    // Transport Left
  USAGE (Mute)                09 E2    // Mute
  USAGE (Shuffle)             09 B9    // Shuffle
  USAGE (Repeat)              09 BC    // Repeat
  USAGE (Promote)             0A 5B 02 // Play More Like This
  USAGE (Demote)              0A 5C 02 // Play Less Like This
  USAGE (Volume Increment)    09 E9    // Volume Up
  USAGE (Volume Decrement)    09 EA    // Volume Down
  INPUT (Data,Var,Abs)        81 02
  USAGE_PAGE (Telephony)      05 0B
  REPORT_COUNT (1)            95 01
  USAGE (Flash)               09 21    // Center
  INPUT (Data,Var,Abs)        81 02
  REPORT_SIZE (5)             75 05
  REPORT_COUNT (1)            95 01
  INPUT (Cnst, Var, Abs)      81 03
END COLLECTION                C0
```

每一报告是两个字节。位是从上到下分配的（从“右移”到“中心”）。例如，以下示例报告传达了所述按钮已被按下：

- 右移是 0x0100
- 左移是 0x0200
- 静音是 0x0400
- 调高音量是 0x8000
- 调低音量是 0x0001
- 中心按钮是 0x0002

2023/10/10 | 版权所有 © 2023 Apple Inc. 保留所有权利。

33. 位置信息

[英语]

定位功能使配件能够以美国国家海洋电子协会 (NMEA) 语句的形式向设备提供全球导航卫星系统 (GNSS) 和传感器数据（例如，速度）。设备可以使用附加信息来增强内置的定位服务。例如，一些外部配件提供更加准确的位置数据，或以更高的频率提供位置更新。此外，设备也可以使用自供电外部配件提供的位置信息，从而节省电量。

有关更多信息，请参阅“配件接口规范（第 22 页）”。

2023/10/10 | 版权所有 © 2023 Apple Inc. 保留所有权利。

34. MagSafe 磁吸

[英语]

下列设备支持 MagSafe 磁吸：

- iPhone 15 Pro Max
- iPhone 15 Pro
- iPhone 15 Plus
- iPhone 15
- iPhone 14 Pro Max
- iPhone 14 Pro
- iPhone 14 Plus
- iPhone 14
- iPhone 13 Pro Max
- iPhone 13 Pro
- iPhone 13
- iPhone 13 mini
- iPhone 12 Pro Max
- iPhone 12 Pro
- iPhone 12
- iPhone 12 mini

MagSafe 保护壳（第 31 页）应该：

- 声称与支持 MagSafe 的设备兼容。
- 集成有 MagSafe 保护壳磁铁阵列（第 139 页）。

其他 MagSafe 配件应该：

- 声称与支持 MagSafe 的设备兼容。
- 集成有 MagSafe 配件磁铁阵列（第 146 页）。

Apple 推荐以下磁铁阵列供应商：

- 宁波三环磁声工贸有限公司 (https://magsound.com)
- 华殷磁电有限公司 (http://www.phonein.com.tw)
- Quadrant Solutions, Inc. (https://www.quadrant.us)

版权所有 © 2023 Apple Inc. 保留所有权利。

34.1 MagSafe 保护壳磁铁阵列 [英语]

图 34-1 MagSafe 保护壳磁铁阵列

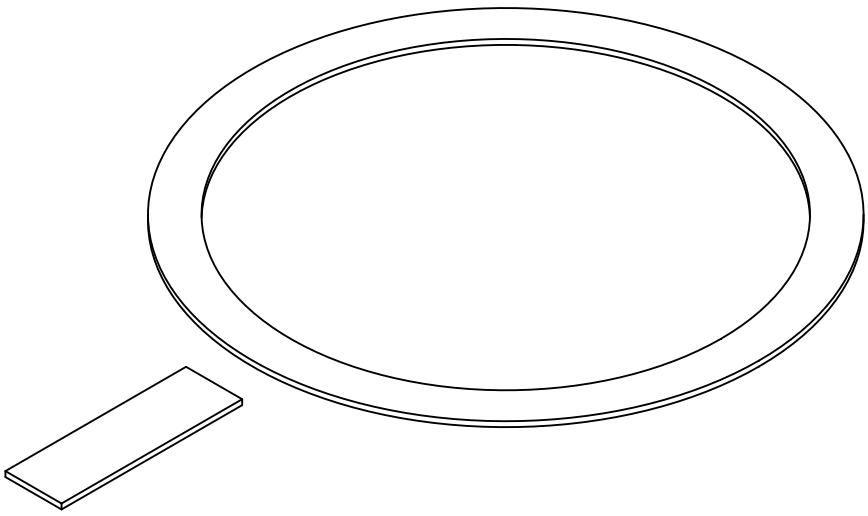

34.1.1 产品设计 [英语]

所有集成了 MagSafe 保护壳磁铁阵列的保护壳应该：

- 包裹设备。
- 厚度均匀，且不超过 2.1 mm；Apple 建议厚度为 2.0 mm。
- 牢固附着于设备，且不依赖磁铁吸附。
- 除了 MagSafe 磁铁外，保护壳背面不可集成任何磁铁。
- 符合保护壳（第 31 页）要求。
- 可搭配：
  - Apple MagSafe 充电器。
  - Apple MagSafe 外接电池。
  - iPhone 专用 MagSafe 皮革卡包。

34.1.2 机械 [英语]

MagSafe 保护壳磁铁阵列中的所有磁铁应该置于同一平面上。

保护壳和 MagSafe 保护壳磁铁阵列应该使 MagSafe 配件以磁吸方式自动对准，误差半径不超过 1.55 mm。

2023/10/10 | 版权所有 © 2023 Apple Inc. 保留所有权利。

34.1.2.1 磁铁 [英语]

所有 MagSafe 保护壳磁铁应该采用 N45SH 钕铁硼及 7 µm - 13 µm 镍铜镍（或类似）电镀层，并应满足表 34-1（第 140 页） 中的要求。

表格 34-1 磁铁属性

属性	最小	最大
Br	13.2 kGs	13.6 kGs
Hcb	12.75 kOe	
Hcj	20.50 kOe	
BHmax	43 MGOe	46 MGOe

34.1.2.2 磁铁阵列 [英语]

磁铁应按照图 34-2（第 141 页）、图 34-3（第 142 页） 和图 34-4（第 142 页） 中所示尺寸和极性放置于保护壳中。

图 34-2　MagSafe 磁铁阵列尺寸

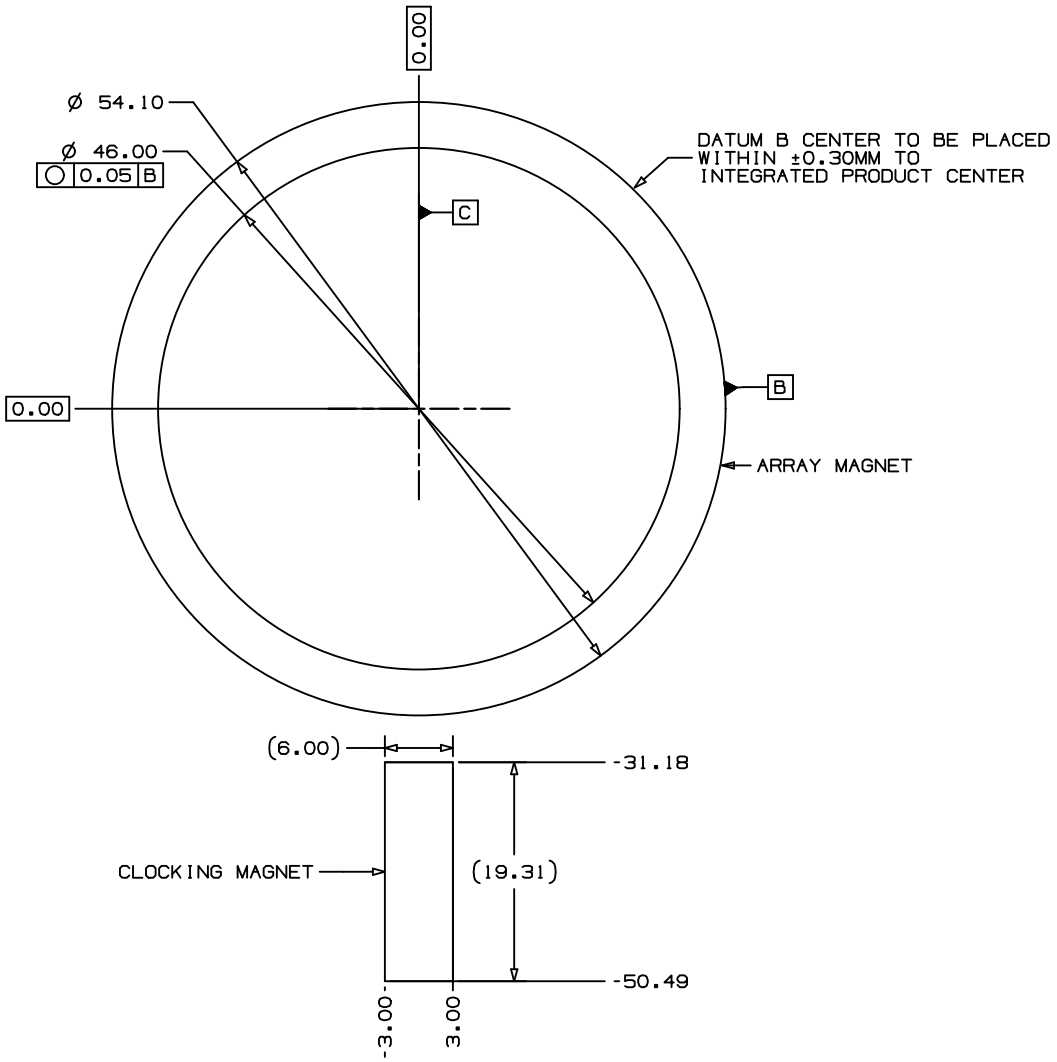

图 34-3　MagSafe 磁性圆环尺寸和极性

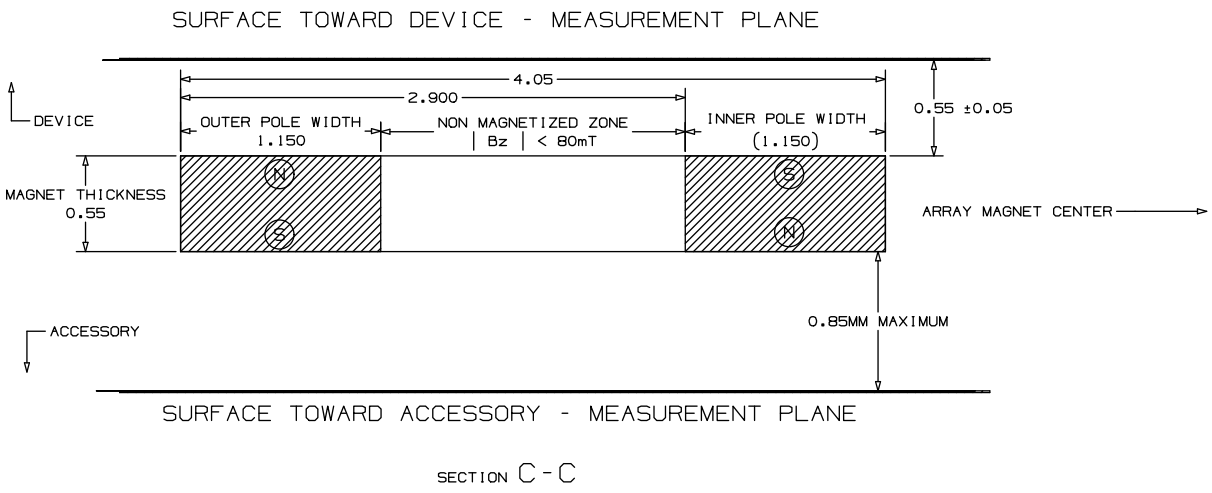

图 34-4　MagSafe 定位磁铁尺寸和极性

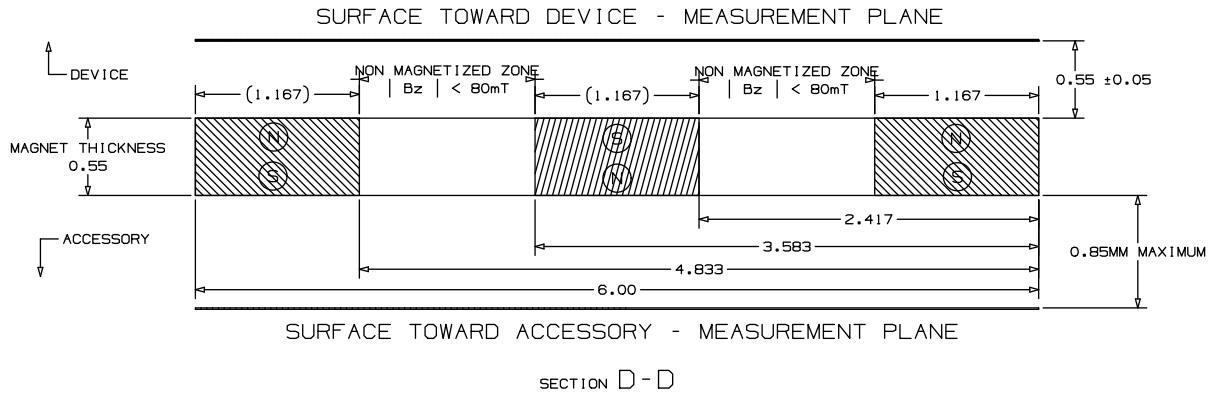

MagSafe 保护壳磁性圆环在图 34-5（第 143 页） 中 8 条线 (S1 - S8) 所示位置的磁通密度应该符合表 34-2（第 143 页） 和表 34-3（第 144 页） 中的规定。

图 34-5　MagSafe 磁通密度测量平面

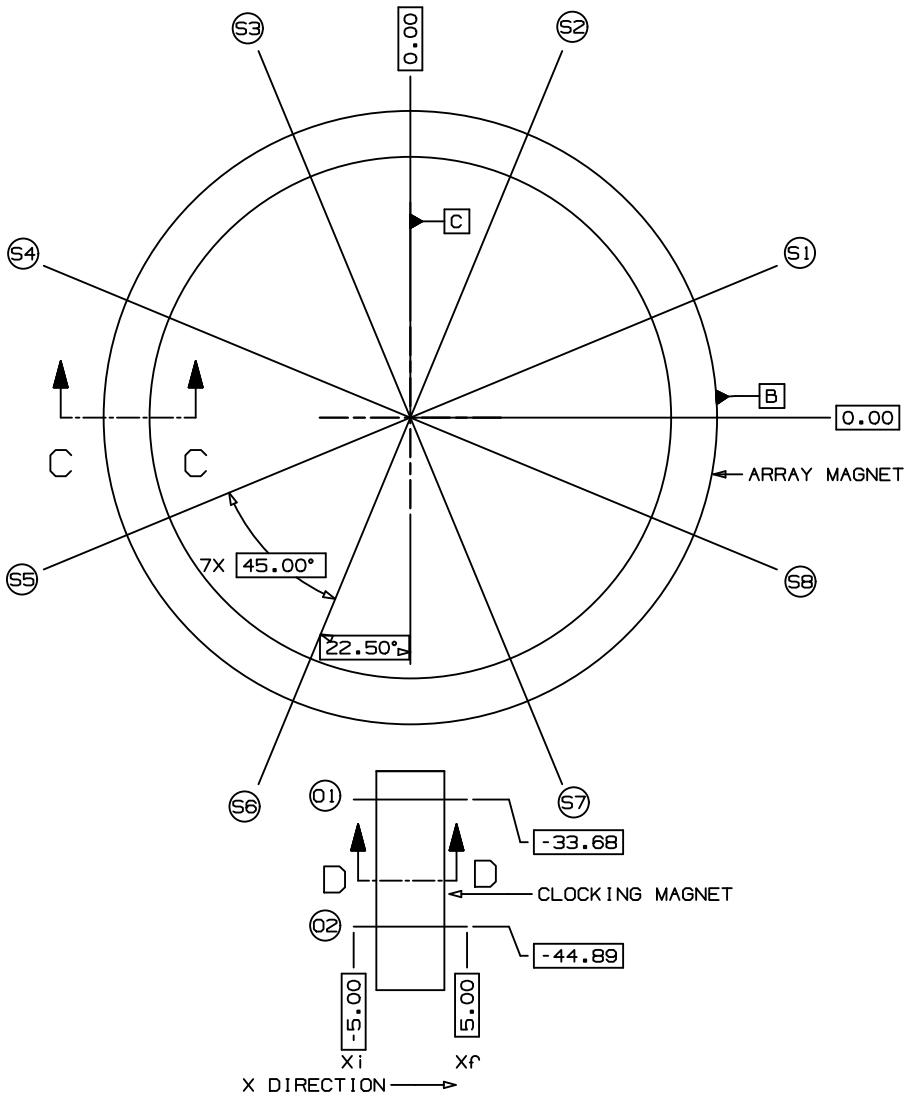

表格 34-2　设备一侧距离磁性圆环表面 0.55 mm 处磁通密度

最小 r	最大 r	最小 Bz	最大 Bz	最小 Bxy	最大 Bxy
	19.5 mm	-0.020 T	0.020 T		0.025 T
19.5 mm	23 mm				0.075 T
23 mm	24 mm	-0.170 T	-0.125 T		
24 mm	26 mm			0.095 T	0.1325 T
26 mm	27 mm	0.125 T	0.170 T		
27 mm	30 mm				0.075 T

最小 r	最大 r	最小 Bz	最大 Bz	最小 Bxy	最大 Bxy
30 mm		-0.020 T	0.000 T		0.025 T

表格 34-3 配件一侧距离磁性圆环表面 0.80 mm 处磁通密度

最小 r	最大 r	最小 Bz	最大 Bz	最小 Bxy	最大 Bxy
	19.5 mm	-0.020 T	0.020 T		0.025 T
19.5 mm	23 mm				0.065 T
23 mm	24 mm	-0.120 T	-0.085 T		
24 mm	26 mm			0.070 T	0.100 T
26 mm	27 mm	0.85 T	0.120 T		
27 mm	30 mm				0.065 T
30 mm		-0.020 T	0.000 T		0.025 T

MagSafe 保护壳定位磁铁在图 34-5（第 143 页） 中 2 条线（O1 和 O2）所示位置的磁通密度应该符合表 34-4（第 144 页） 和表 34-5（第 144 页） 中的规定。

表格 34-4 设备一侧距离定位磁铁表面 0.55 mm 处磁通密度

最小 x	最大 x	最小 Bz	最大 Bz	最小 Bxy	最大 Bxy
	-5.0 mm	-0.020 T	0.020 T		0.025 T
-5.0 mm	-4.5 mm	-0.020 T	0.020 T		
-4.5 mm	-2.75 mm			0.080 T	0.110 T
-2.75 mm	-2.0 mm	0.125 T	0.175 T		
-2.0 mm	-0.5 mm			0.110 T	0.155 T
-0.5 mm	0.5 mm	-0.1925 T	-0.140 T		
0.5 mm	2.0 mm			0.110 T	0.155 T
2.0 mm	2.75 mm	0.125 T	0.175 T		
2.75 mm	4.0 mm			0.080 T	0.110 T
4.0 mm	5.0 mm	-0.020 T	0.020 T		
5.0 mm		-0.020 T	0.020 T		0.025 T

表格 34-5 配件一侧距离定位磁铁表面 0.80 mm 处磁通密度

最小 x	最大 x	最小 Bz	最大 Bz	最小 Bxy	最大 Bxy
	-5.0 mm	-0.020 T	0.020 T		0.025 T
-5.0 mm	-4.5 mm	-0.020 T	0.020 T		

最小 x	最大 x	最小 Bz	最大 Bz	最小 Bxy	最大 Bxy
-4.5 mm	-2.75 mm			0.050 T	0.070 T
-2.75 mm	-2.0 mm	0.085 T	0.120 T		
-2.0 mm	-0.5 mm			0.0825 T	0.115 T
-0.5 mm	0.5 mm	-0.140 T	-0.0975 T		
0.5 mm	2.0 mm			0.0825 T	0.115 T
2.0 mm	2.75 mm	0.085 T	0.120 T		
2.75 mm	4.0 mm			0.050 T	0.070 T
4.0 mm	5.0 mm	-0.020 T	0.020 T		
5.0 mm		-0.020 T	0.020 T		0.025 T

34.1.2.3 磁力 [英语]

移走 MagSafe 配件（如 Apple MagSafe 充电器）时，所需的力（垂直于设备背面）应该满足表 34-6（第 145 页） 中的要求。

表格 34-6 磁力

情景	最小	最大
保护壳装于设备时	800 gf	1100 gf
仅保护壳	600 gf	900 gf

34.1.3 磁场干扰 [英语]

所有集成有 MagSafe 磁铁阵列的保护壳不应干扰以下方面：

- 感应式充电。
- 安装的 iPhone 专用 MagSafe 皮革卡包中的磁条卡。

34.2 MagSafe 配件磁铁阵列 [英语]

图 34-6 MagSafe 配件磁铁阵列选项

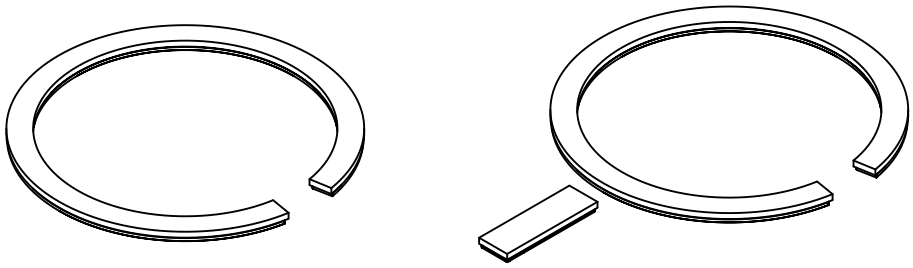

MagSafe配件磁铁阵列应以磁性圆环（第147页）形式实施。通过这个磁性圆环，设备与配件能够从任何方向吸附在一起。为了支持某个特定方向，配件可以在阵列中包括一个定位磁铁（第 149 页）。

34.2.1 产品设计 [英语]

集成了 MagSafe 磁铁阵列的配件不应包裹设备。

34.2.2 机械 [英语]

配件不应干扰或造成设备刮伤和损坏（第 25 页）。

为避免对设备造成干扰，配件应：

- 保持磁性圆环表面中心位置距离设备顶部边缘（受支持设备的所有方向）不超过 30 毫米。如果设备和配件能以任何方向吸附在一起，那么配件围绕磁性圆环表面中心位置的半径不应超过30毫米。
- 使超出 30 毫米距离限制的任何部分与设备背面（接合面）保持 5 毫米间隙。
- 不超出 MagSafe 配件机壳几何结构（第 153 页）。

图 34-7 MagSafe 配件间隙

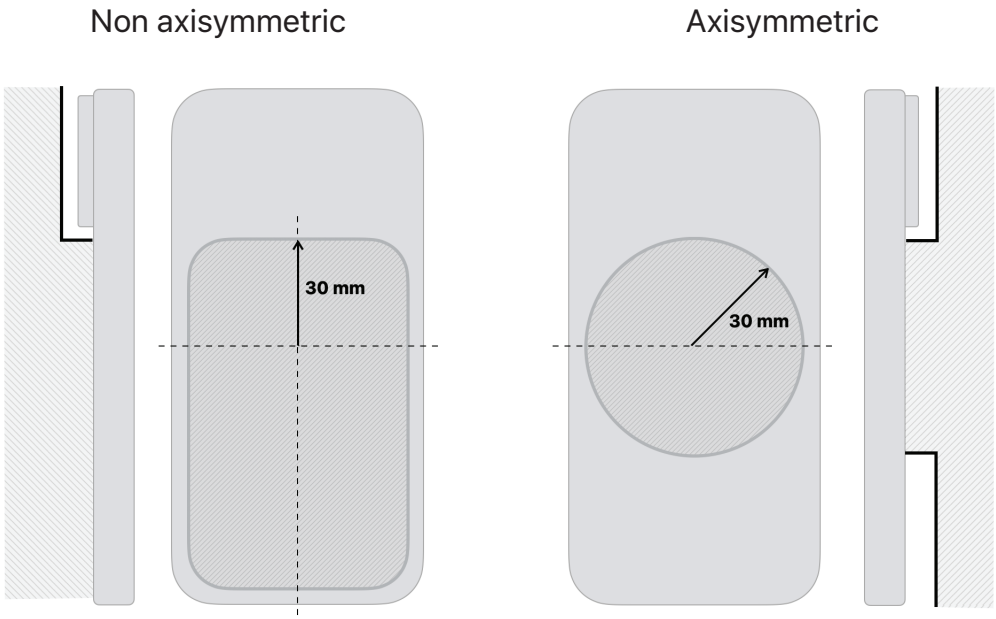

MagSafe 配件磁铁阵列中的所有磁铁应该置于同一平面上。

MagSafe 配件的磁性圆环（第 147 页）应该以磁吸方式自动与设备的磁性圆环对准，误差半径不超过 1.55 mm。

34.2.2.1 磁铁 [英语]

所有 MagSafe 配件磁铁应该采用 N48H 钕铁硼及 7 µm - 13 µm 镍铜镍（或类似）电镀层，并应满足表 34-7（第 147 页） 中的要求。

表格 34-7 磁铁属性

属性	最小	最大
Br	13.7 kGs	14.1 kGs
Hcb	13.25 kOe	
Hcj	17 kOe	
BHmax	45 MGOe	48 MGOe

34.2.2.2 磁性圆环 [英语]

磁性圆环应该按照图 34-8（第 148 页） 和图 34-9（第 149 页） 中所示尺寸和极性放置于配件中。

图 34-8　MagSafe 磁性圆环尺寸

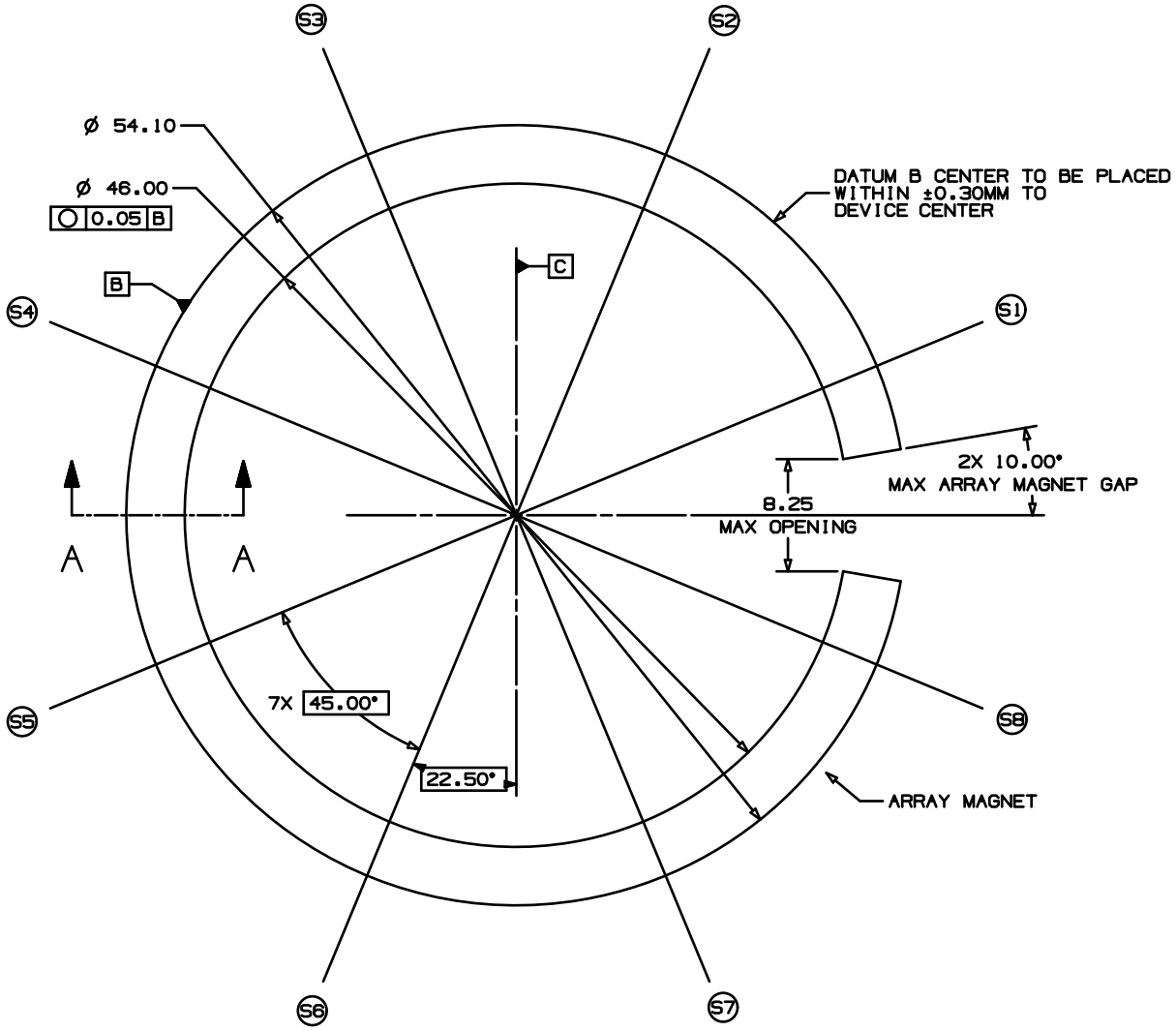

图 34-9　MagSafe 磁性圆环尺寸和极性

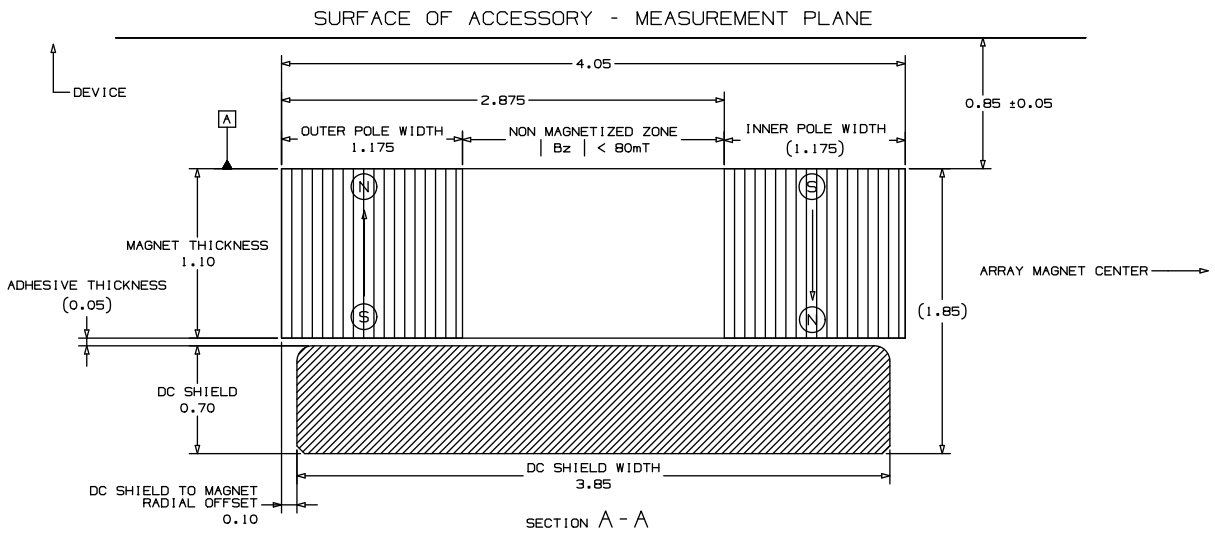

请参阅直流屏蔽罩（第 152 页），了解有关图 34-9（第 149 页）中规定的直流屏蔽罩的更多要求。

MagSafe 配件磁性圆环在图 34-8（第 148 页）中 8 条线 (S1 - S8) 所示位置的磁通密度应该符合表 34-8（第 149 页）中的规定。

表格 34-8　距离磁性圆环表面 0.85 mm 处磁通密度

最小 r	最大 r	最小 Bz	最大 Bz	最小 Bxy	最大 Bxy
0 mm	19.5 mm	-0.025 T	0.025 T		0.025 T
19.5 mm	23 mm				0.075 T
23 mm	24.5 mm	-0.215 T	-0.155 T		
24.5 mm	25.5 mm			0.170 T	0.215 T
25.5 mm	27 mm	0.155 T	0.215 T		
27 mm	30 mm				0.075 T
30 mm		-0.025 T	0.025 T		0.025 T

34.2.2.3 定位磁铁 [英语]

如果附有定位磁铁，则磁铁应按照图 34-10（第 150 页）和图 34-11（第 151 页）所示来放置。

图 34-10 MagSafe 定位磁铁尺寸

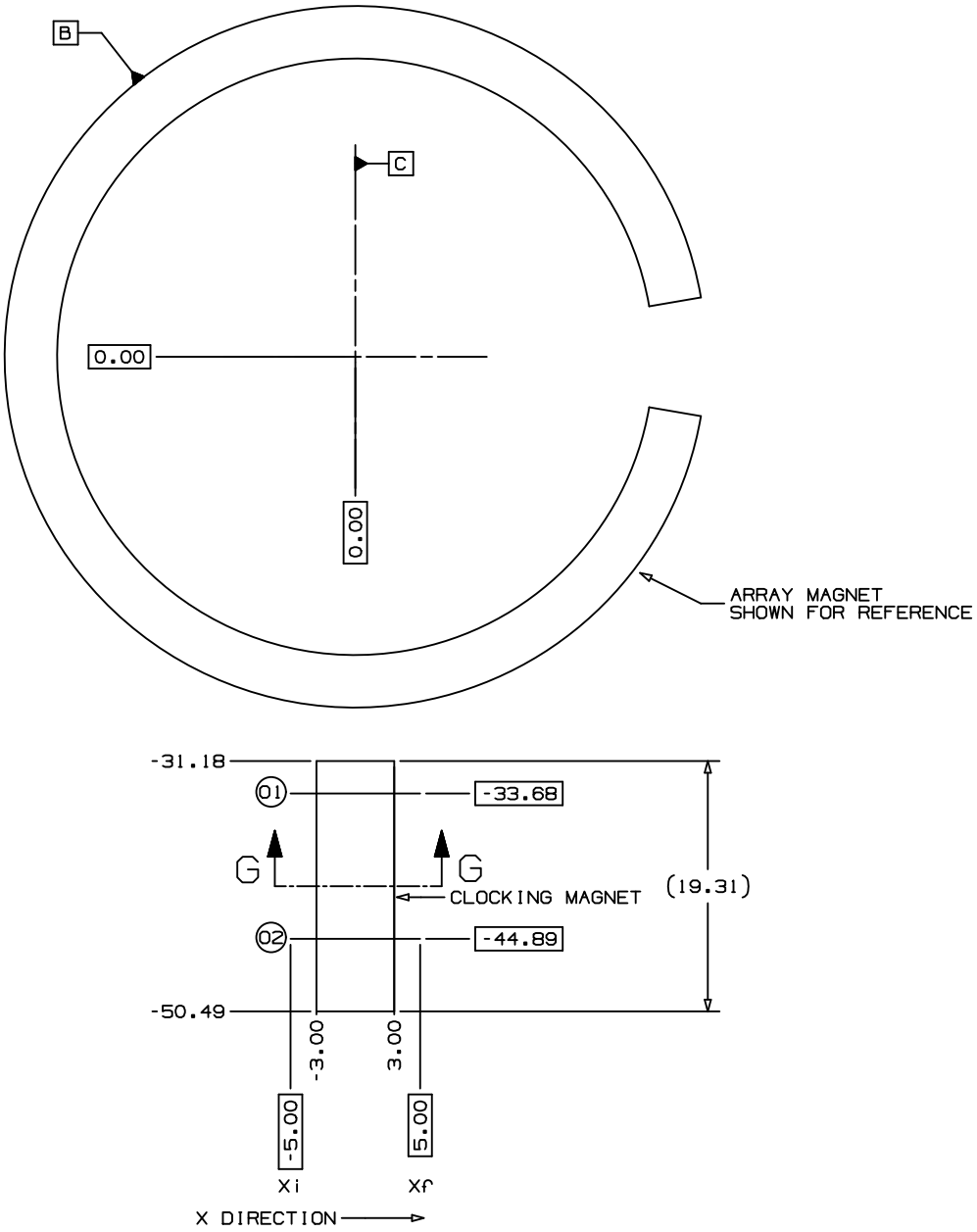

图 34-11 MagSafe 定位磁铁尺寸和极性

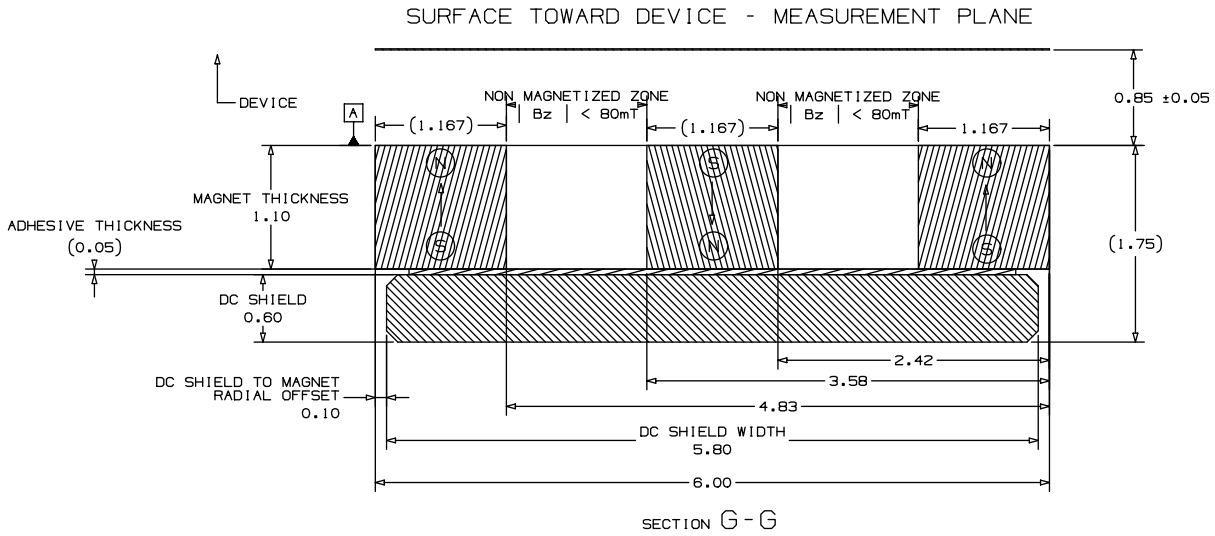

请参阅直流屏蔽罩（第 152 页），了解有关图 34-11（第 151 页） 中规定的直流屏蔽罩的更多要求。

MagSafe 配件定位磁铁在图 34-9（第 150 页） 中 2 条线（O1 和 O2）所示位置的磁通密度应该符合表 34-10（第 151 页） 中的规定。

表格 34-9 距离定位磁铁表面 0.85 mm 处磁通密度

最小 x	最大 x	最小 Bz	最大 Bz	最小 Bxy	最大 Bxy
	-5.0 mm	-0.025 T	0.025 T		0.025 T
-5.0 mm	-4.5 mm	-0.025 T	0.025 T		
-4.5 mm	-3.0 mm			0.0625 T	0.0875 T
-3.0 mm	-2.0 mm	0.145 T	0.195 T		
-2.0 mm	-0.5 mm			0.165 T	0.215 T
-0.5 mm	0.5 mm	-0.250 T	-0.185 T		
0.5 mm	2.0 mm			0.165 T	0.215 T
2.0 mm	3.0 mm	0.145 T	0.195 T		
3.0 mm	4.0 mm			0.0625 T	0.0875 T
4.0 mm	5.0 mm	-0.025 T	0.025 T		
5.0 mm		-0.025 T	0.025 T		0.025 T

34.2.2.4 磁力 [英语]

移走 MagSafe 配件时，所需的力（垂直于设备背面）应该满足表 34-10（第 152 页） 中的要求。

2023/10/10 | 版权所有 © 2023 Apple Inc. 保留所有权利。

表格 34-10 磁力

情景	最小	最大
配件装于设备时	650 gf	900 gf

34.2.2.5 直流屏蔽罩 [英语]

直流屏蔽罩应该采用符合 ASTM848 要求的低碳钢（1010、DT4 或类似），并且应具有 5 µm - 10 µm 镍或类似电镀层。

直流屏蔽罩的饱和磁通密度 (B_{sat}) 应该至少达到 2.0 T。

34.3 MagSafe 配件机壳几何结构

[英语]

NOTES: (UNLESS OTHERWISE SPECIFIED)

1. SPLINE REPRESENTS MAX MATERIAL CONDITION FOR AN EXTERIOR PRODUCT SURFACE. MAGSAFE COMPATIBLE ACCESSORIES SHALL STAY WITHIN THE PROVIDED SPLINE.
2. FOR NON AXISYMMETRIC APPLICATIONS, SPLINE REPRESENTS MAX MATERIAL CONDITION WHEN VIEWED ALONG X AXIS
3. FOR AXISYMMETRIC APPLICATIONS, A REVOLUTION OF THE SPLINE AROUND THE Z AXIS THROUGH THE CENTER POINT OF THE MAGNET ARRAY REPRESENTS THE MAX MATERIAL CONDITION

[4] ANY CURVATURE DEVIATING BEYOND SPLINE TO EXIST BEYOND 5MM Z CLEARANCE FROM TOP OF PRODUCT

REV	ECO#	DESCRIPTION OF REVISION

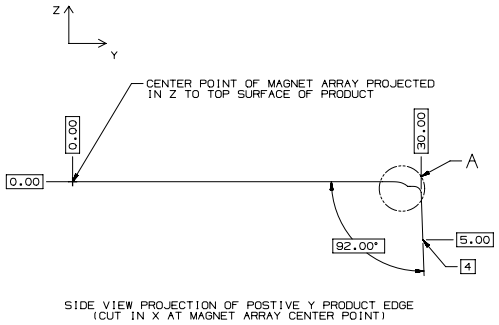

SIDE VIEW PROJECTION OF POSTIVE Y PRODUCT EDGE
(CUT IN X AT MAGNET ARRAY CENTER POINT)

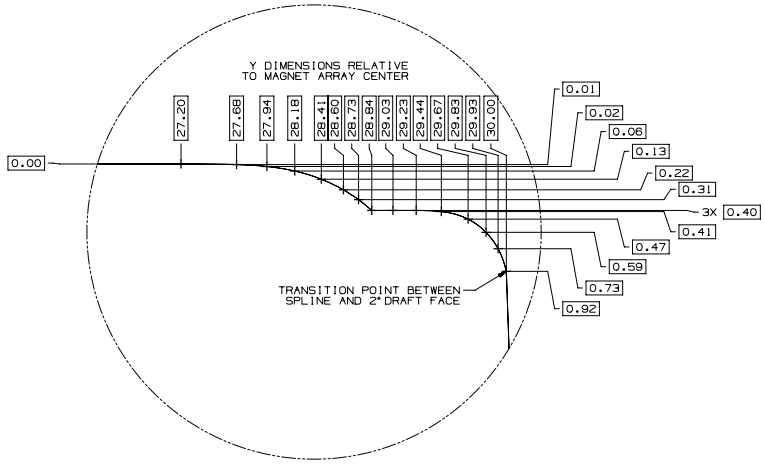

DETAIL A
SCALE 50:1

METRIC	Apple Inc.
DRAFTER: APPLE — DATE	NOTICE OF PROPRIETARY PROPERTY: THE INFORMATION CONTAINED HEREIN IS THE PROPRIETARY PROPERTY OF APPLE INC. THE POSSESSOR AGREES TO THE FOLLOWING: (i) TO MAINTAIN THIS DOCUMENT IN CONFIDENCE (ii) NOT TO REPRODUCE OR COPY IT (iii) NOT TO REVEAL OR PUBLISH IT IN WHOLE OR PART (iv) ALL RIGHTS RESERVED
DESIGNER: APPLE — DATE	
DIMENSIONS ARE IN MILLIMETERS TOLERANCES	TITLE: MAGSAFE COMPATIBLE ENCLOSURE GEOMETRY
DO NOT SCALE DRAWINGS	DRAWING NUMBER — REV. 01
THIRD ANGLE PROJECTION — SIZE D — SCALE NONE — SHT 1 OF 1	

NX GENERATED

34.4 测试规程 [英语]

34.4.1 MagSafe 保护壳磁铁阵列 [英语]

34.4.1.1 保护壳厚度 [英语]

34.4.1.1.1 器材 [英语]

- 数字式测厚仪，例如 Mitutoyo 547-520S。

34.4.1.1.2 规程 [英语]

1. 使用数字式测厚仪，验证以下位置的厚度小于或等于 2.1 mm：
   - 沿着磁性圆环的四个点。
   - 沿着定位磁铁的两个点。

34.4.1.2 配件间隙 [英语]

34.4.1.2.1 器材 [英语]

- 具有 MagSafe 功能的设备。
- Apple MagSafe 外接电池。

34.4.1.2.2 规程 [英语]

1. 将保护壳吸附到设备上。
2. 将 Apple MagSafe 外接电池吸附到保护壳的背面。
3. 验证保护壳不会干扰 Apple MagSafe 外接电池正常工作，且仅接合面接触。

34.4.1.3 磁力 [英语]

34.4.1.3.1 器材 [英语]

- 具有 MagSafe 功能的设备。
- Apple MagSafe 充电器，且背面牢固地粘附一个非磁性孔眼螺丝。拉动这个孔眼应会在充电器的中央部位施力。
- 数字式测力仪，可用于采集应力峰值；例如 Chatillon DFX II。
- 用于数字式测力仪的挂钩附件。
- 夹钳。

34.4.1.3.2 规程 [英语]

1. 将保护壳吸附到设备上。
2. 将设备正面朝下放在平坦的表面上，然后将它夹紧固定到位。请参见图 34-12（第 156 页）。
3. 重复以下步骤 5 次：
   a. 将改装的 Apple MagSafe 充电器吸附到保护壳上，以使 Apple MagSafe 充电器通过磁力对齐。
   b. 用测力仪上的挂钩勾住螺丝孔眼。请参见图 34-12（第 156 页）。
   c. 还原测力仪上的应力峰值。
   d. 垂直拉动测力仪，直到 Apple MagSafe 充电器和螺丝孔眼组件与保护壳脱离。
   e. 记录测力仪上显示的应力峰值。
4. 计算 5 次所测应力峰值的平均值。
5. 验证这个应力均值在 800 gf 至 1100 gf 的范围内。

2023/10/10 | 版权所有 © 2023 Apple Inc. 保留所有权利。

图 34-12 磁力测试设置

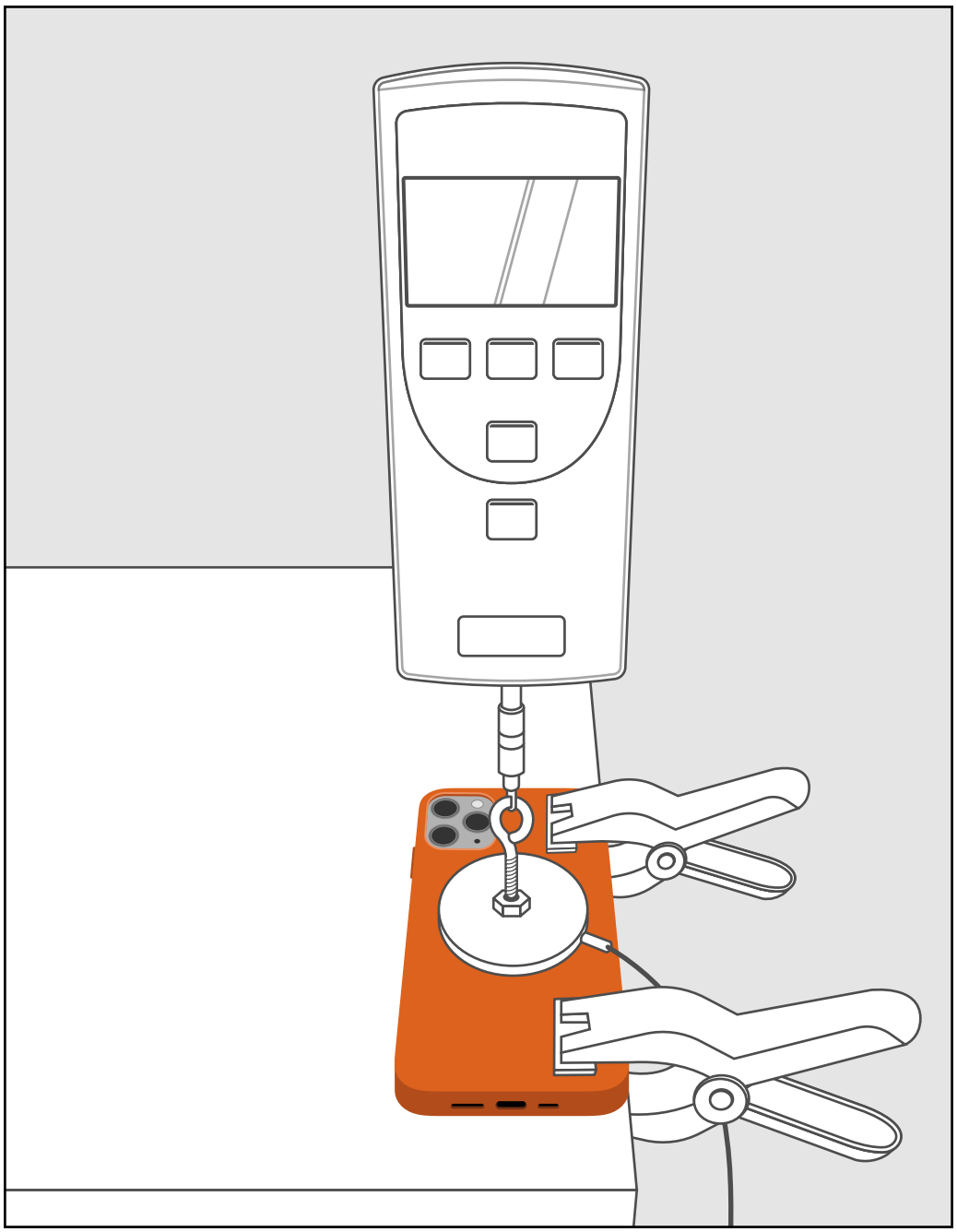

34.4.1.4 iPhone 专用 MagSafe 皮革卡包检测 [英语]

34.4.1.4.1 器材 [英语]

- 具有 MagSafe 功能的设备。
- iPhone 专用 MagSafe 皮革卡包。

34.4.1.4.2 规程 [英语]

1. 将保护壳吸附到设备上。
2. 将卡包吸附到保护壳的背面。
3. 验证设备上显示有卡包的动画效果。

34.4.1.5 iPhone 专用 MagSafe 皮革卡包中的磁条卡 [英语]

34.4.1.5.1 器材 [英语]

- 具有 MagSafe 功能的设备。
- iPhone 专用 MagSafe 皮革卡包。
- 低矫顽磁性 (LoCo) 磁条卡，例如来自以下供应商的卡片：
  - American Card Service。
  - Allsafe。
  - CI Solutions。
  - PSA。
- LoCo 读卡器/写卡器，例如：
  - Q-card Mag3x。
  - Magtek InSpec 9000。
  - Misiri X6BT。
  - Deftun MSR605X。

34.4.1.5.2 规程 [英语]

1. 将配件安装到设备上。
2. 针对三种不同品牌的 LoCo 卡片重复以下步骤：
   a. 向 LoCo 卡片写入数据，并确认可以读取。
   b. 将 LoCo 卡片插入卡包，并使磁条面朝向磁铁。
   c. 在卡包中放入其他卡片，确保 LoCo 卡片与卡包的磁铁面相接触。
   d. 将卡包安装到配件（安装于设备）上。
   e. 等待 10 秒钟。
   f. 从配件上取下卡包。
   g. 从卡包中取出 LoCo 卡片。
   h. 验证 LoCo 卡片能被读取并且显示正确的信息。

34.4.2 MagSafe 配件磁铁阵列 [英语]

34.4.2.1 定位磁铁 [英语]

如果配件包含定位磁铁：

1. 使用直尺验证磁性圆环和定位磁铁的设备接触面是不是共面（在同一平面内对齐）。
2. 将具有 MagSafe 功能的设备连接到配件上，并将其与定位磁铁对齐。验证以下各项之间没有间隙：
   - MagSafe 磁性圆环和设备。
   - MagSafe 定位磁铁和设备。

2023/10/10 | 版权所有 © 2023 Apple Inc. 保留所有权利。

35. 媒体资料库访问

[英语]

媒体资料库功能让配件能够下载设备媒体资料库的元数据内容（而不是媒体项目本身），以及请求播放媒体项目。这项功能分为以下几个子功能：

- “媒体资料库信息”，向配件告知设备上可用的媒体资料库。
- “媒体资料库更新”，为配件提供特定媒体资料库的内容更新视图。
- “媒体资料库播放”，让设备能够请求播放媒体资料库中的一个或多个项目。

有关更多信息，请参阅“配件接口规范（第 22 页）”。

2023/10/10 | 版权所有 © 2023 Apple Inc. 保留所有权利。

36. 乐器数字接口 (MIDI) [英语]

兼容的 USB 和低功耗蓝牙 MIDI 配件可以使用 Core MIDI 框架直接与 iOS 17.0、iPadOS 17.0 和 macOS 14.0 Sonoma 应用程序交互，详见 https://developer.apple.com/documentation/coremidi。

36.1 要求 [英语]

支持将 MIDI 作为 USB 设备使用的配件应实施 MIDI Streaming IN 端点，并且应支持以下任一项：

- MIDI 设备的 USB 设备类定义，版本 2.0 (*USB Device Class Definition for MIDI Devices, Version 2.0*)，详见 https://www.usb.org/document-library/usb-class-definition-midi-devices-v20。
- MIDI 设备的 USB 设备类定义，版本 1.0 (*USB Device Class Definition for MIDI Devices, Release 1.0*)，详见 https://www.usb.org/document-library/usb-midi-devices-10。

支持低功耗蓝牙 MIDI 的配件应支持以下规范：

- MIDI 协会低功耗蓝牙 MIDI (BLE-MIDI)，版本 1.0a (*MIDI Association MIDI over Bluetooth Low Energy (BLE-MIDI), Version 1.0a*)，详见 https://www.midi.org/specifications-old/item/bluetooth-le-midi。

36.2 测试规程 [英语]

开发者应使用 Audio MIDI Setup App 及其 MIDI Studio 和 Test MIDI Setup 功能，针对 macOS 14.0 Sonoma 测试配件设计。请参阅使用手册 (https://support.apple.com/zh-cn/guide/audio-midi-setup/welcome/mac)。

37. “正在播放”更新

[英语]

“正在播放”功能让配件能够显示设备上当前“正在播放”媒体源和媒体项目的信息。媒体源包括设备上内置的“音乐”和“视频”App，以及支持生成“播放中”元数据的特定第三方 iOS App，详见 iOS SDK 文档中的“*MPNowPlayingInfoCenter*”。配件应该做好“正在播放”媒体源和媒体项目随时更改的准备，而不论更改是否由配件请求。

有关更多信息，请参阅“配件接口规范（第 22 页）”。

2023/10/10 | 版权所有 © 2023 Apple Inc. 保留所有权利。

38. 带外蓝牙配对

[英语]

能够使用蓝牙和有线传输连接到设备的配件应使用“带外蓝牙配对”功能来简化蓝牙连接设置。

例如，首次连接时可以使用闪电至 USB 充电/同步连接线或闪电至 USB 配件连接线来交换蓝牙配对信息。这样可以减少或消除提供说明手册来描述以下操作的必要：

- 将配件置于可被发现且可配对的模式。
- 在设备上使用“设置”App 发起蓝牙配对。
- 下载配件的配套 app 并从 app 中发起配对。

有关更多信息，请参阅“配件接口规范（第 22 页）”。

2023/10/10 | 版权所有 © 2023 Apple Inc. 保留所有权利。

39. Siri [英语]

Siri 让用户仅通过语音，就能与设备进行丰富的交互。

支持 Siri 的配件不应使用类似于 Siri 麦克风图标的图标。

本章的其余部分适用于使用 HFP 命令通过蓝牙支持 Siri 的配件。

要使用其他传输和协议支持 Siri，配件开发者应该加入 Apple MFi 许可计划（第 23 页）。

39.1 启用自定 Siri 命令 [英语]

使用 HFP 命令通过蓝牙支持 Siri 的配件都应该支持 HFP 命令 AT+XAPL（第 114 页）。设备将利用这个命令发送的信息来启用和停用与 Siri 相关的自定命令。

要接收 Siri 状态事件，在与设备成功建立 HFP 服务级连接 (SLC) 后，配件应该发送 AT+XAPL 命令。在发送下述任何额外 Siri 专有命令之前，配件应当发送 AT+XAPL 命令。

39.2 获取 Siri 可用性信息 [英语]

在建立 HFP 描述文件连接后，配件可以确定设备上是不是可以使用 Siri，以及是不是启用了 Siri。它也可以接收 Siri 状态的更改通知。如果 Siri 已被停用，语音控制将被激活。

39.2.1 在连接时获取状态信息 [英语]

在成功建立 HFP 描述文件 (SLC) 连接并发送 AT+XAPL 命令后，配件应当发送以下命令。

39.2.1.1 HFP 命令 AT+APLSIRI? [英语]

说明：AT 命令，用于检索 Siri 状态信息。

发起者：配件

格式：`AT+APLSIRI?`

响应：`+APLSIRI:`*value*

定义的值：

- 0 = Siri 在这个平台上不可用。
- 1 = Siri 可用并已启用。
- 2 = Siri 可用但未启用。

示例：+APLSIRI:1（Siri 可用并已启用）

39.2.2 从设备接收 Siri 可用性更新 [英语]

在初始化完成后，如果 Siri 状态发生变化，设备将向配件发送以下通知。只有当配件在连接后至少请求一次 Siri 状态（通过发送 AT+APLSIRI?）并且设备报告 Siri 可用并已启用时，才会提供这个通知。

39.2.2.1 HFP 命令 +APLSIRI [英语]

说明：未经请求的事件，表明 Siri 状态发生变化。

发起者：设备

格式：+APLSIRI:*value*

定义的值：
- 1 = Siri 可用并已启用。
- 2 = Siri 可用但未启用。

示例：+APLSIRI:2（Siri 可用但未启用）

图 39-1 在设备的“设置”中停用/启用 Siri

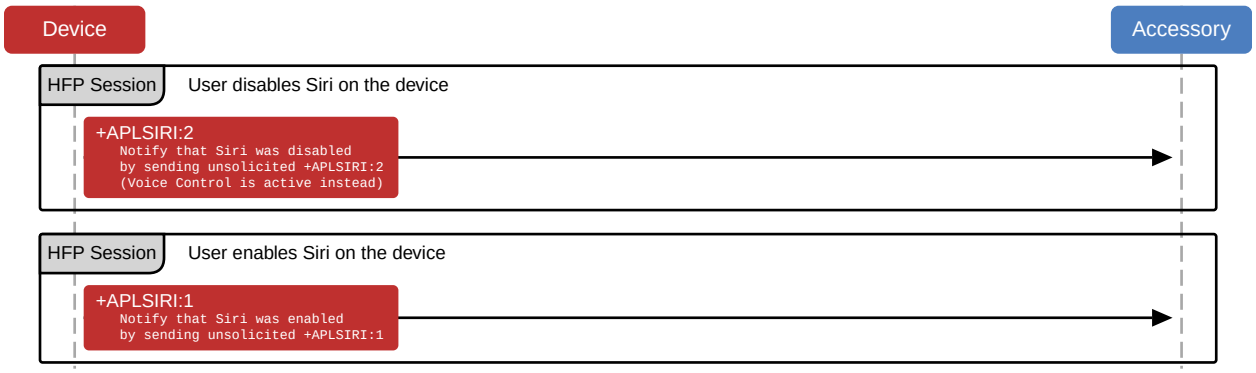

39.3 发起 Siri 会话 [英语]

当配件和设备上建立 Siri 支持后，就可以从配件或设备发起 Siri 会话。

39.3.1 从配件发起会话 [英语]

配件应当仅在收到直接用户操作时，发起 Siri 会话。

配件应该使用“蓝牙免提描述文件”规范中定义的语音识别命令 AT+BVRA（“免提描述文件”1.6 描述文件规范，第 4.25 节）来发起 Siri 会话。

HFP 描述文件应该连接，并且 SLC 应该存在。

配件应当使用以下命令序列：

- 配件向设备发送 AT+BVRA=1 命令。
- 设备发送 OK 响应。
- 设备激活 Siri 会话并为音频创建一个同步连接 (SCO)。
- 如果 Siri 会话没有完成，配件应该发送 AT+BVRA=1 来继续对话。这可能需要发生多次。
- 当 Siri 会话结束时，设备会将 +BVRA:0 结果代码发送到配件。
- 设备断开 SCO 连接。

当 Siri 会话处于活跃状态时，配件应该能够让用户继续进行对话并在当前上下文中询问跟进问题。为此，即使在 Siri 已激活之后和收到 +BVRA:0 之前，配件也应该能够将 AT+BVRA=1 命令发送到设备。图 39-2（第 165 页）显示了以下情况下的交互概述：从配件触发 Siri，使运行中的会话继续两次，并在 Siri 完成后由设备解散会话。

图 39-2 从配件发起 Siri 会话

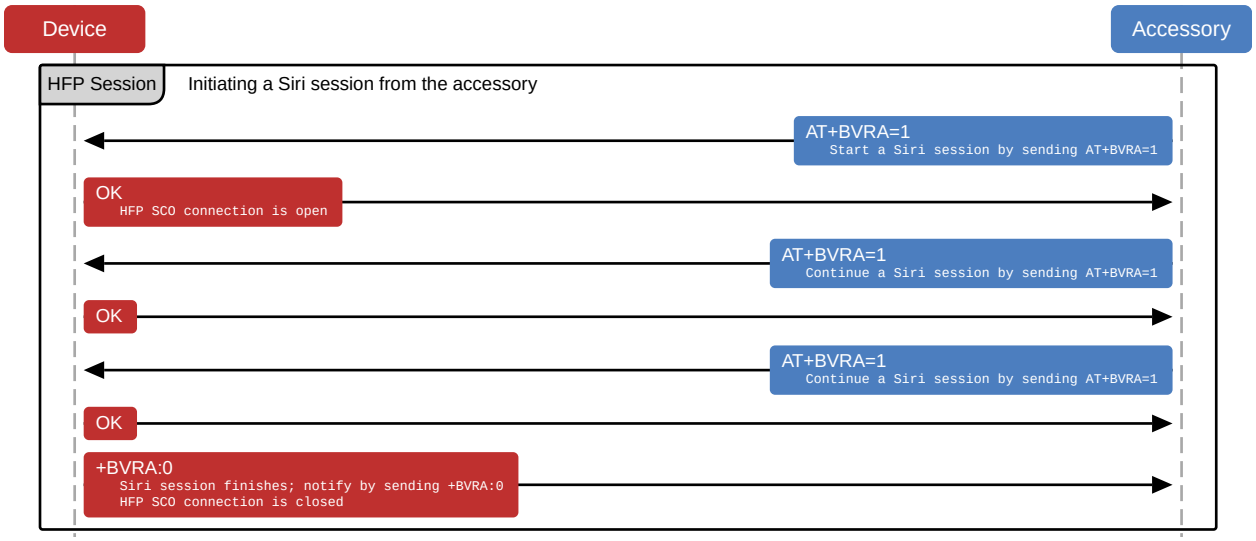

39.3.2 从设备发起会话 [英语]

如果配件支持语音识别命令，设备会发送 +BVRA 事件以指示 Siri 会话的开始。配件应该能够支持语音识别，并按照“蓝牙免提描述文件 (Bluetooth Hands-Free Profile)”规范 1.6 版第 4.34.1 节“蓝牙定义的 AT 功能”中所述在功能响应中指明。具体来说，应该连接 HFP 描述文件，SLC 应该存在，并且应该在 AT+BRSF 命令中启用语音识别激活（位 3）。如果配件支持语音识别激活，设备将不会在 Siri 会话中使用虚拟呼叫功能。

配件应当遵循以下命令序列：

- 设备向配件发送 +BVRA:1 事件。
- 设备激活 Siri 会话并为音频创建一个 SCO 连接。
- 当 Siri 会话结束时，设备会将 +BVRA:0 结果代码发送到配件。
- 设备断开 SCO 连接。

图 39-3 从设备发起 Siri 会话

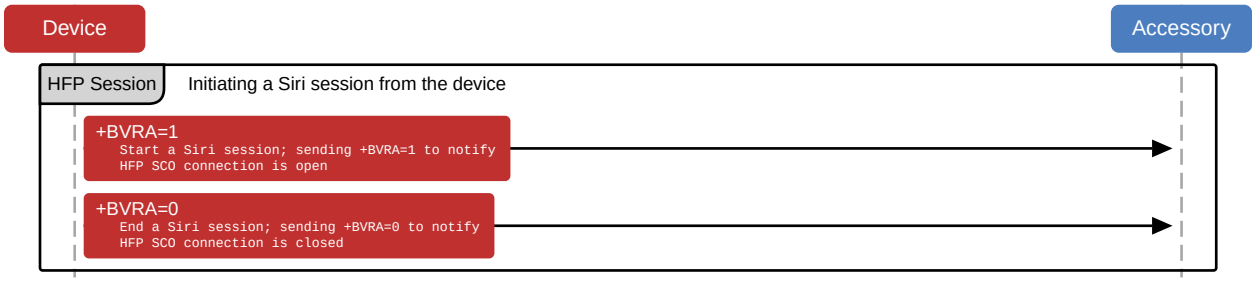

39.3.3 从配件结束会话 [英语]

在Siri会话开始运行后，配件应该能够通过向设备发送AT+BVRA=0命令来结束会话。图39-4（第166页） 显示了从配件结束运行中 Siri 会话的示例。配件应当仅在收到直接用户操作时，结束活动会话。

图 39-4 从配件结束 Siri 会话

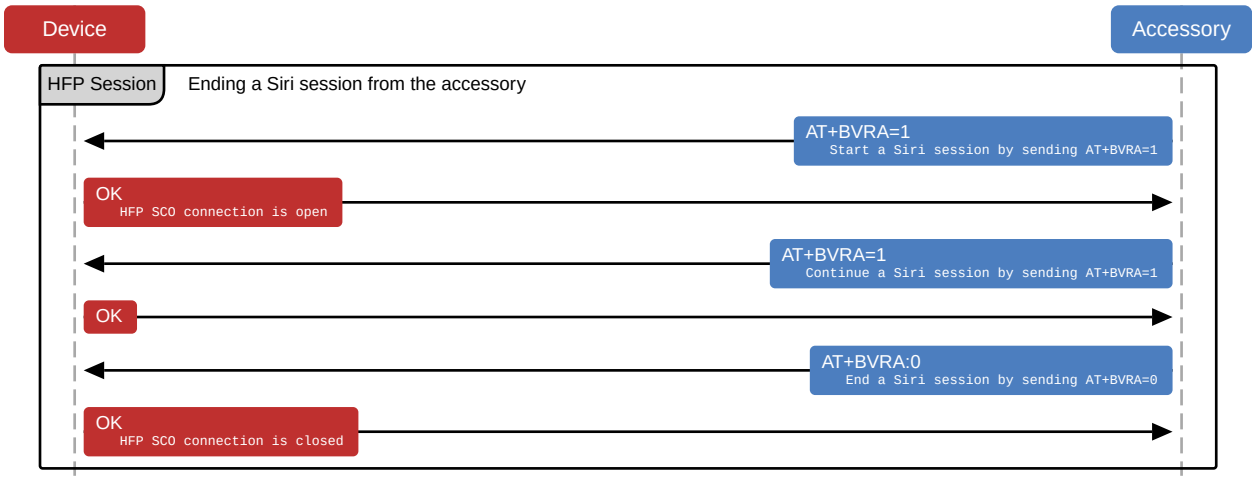

39.4 Siri Eyes Free 模式 [英语]

Siri Eyes Free 模式是一项用于控制包含显示信息的 Siri 响应的功能，可根据需要启用或停用。在 Siri Eyes Free 模式下，用户体验针对驾驶情景而量身定制，与 Siri 的交互主要使用语音完成，以最大限度地减少用户需要查看屏幕的情况。仅针对蓝牙车载娱乐系统支持 Siri Eyes Free 模式，任何其他配件均不应使用这一模式。Siri Eyes Free 模式不应使用语音命令触发。

设备将侦听 HFP AT 命令 AT+APLEFM 以启用或停用 Siri Eyes Free 模式。

设备使用这一命令来修改包含可视信息或需要用户交互的 Siri 响应。根据所发起的 Siri 用例，用户可以使用合适的音频反馈和语音命令。

在默认情况下，Siri Eyes Free 模式处于停用状态。在配件启用 Siri Eyes Free 模式后，这一模式会在从配件发起的所有后续 Siri 会话中保持启用状态，直到配件停用 Eyes Free 模式或蓝牙连接断开。

39.4.1 HFP 命令 AT+APLEFM [英语]

说明：配件发送这一命令，以通知设备的首选状态为 Siri Eyes Free 模式。

发起者：配件

格式：`AT+APLEFM=`*value*

响应：`OK`

定义的值：

- `0x00` = 停用 Siri Eyes Free 模式。
- `0x01` = 启用 Siri Eyes Free 模式。
- `0x02-0xFF` = 保留

示例：`AT+APLEFM=1`

39.5 改善语音识别 [英语]

在 Siri 会话期间，配件发送给设备的麦克风音频应当适合进行语音识别。适合语音识别的音频要求可能与适合人类感知的音频要求（例如在蜂窝移动通话期间）不同。

配件可以对音频信号进行过滤，以消除回声或反馈噪声。

为了向 Siri 输入提供尽可能适合的音频质量，配件应该遵循以下建议：

- **回声消除和噪声抑制 (EC/NR)**：建议使用指向性麦克风、线性波束成形以及麦克风阵列来提高 SNR。另外还建议使用线性回声消除来减少不必要的音频源（例如系统的音频输出），而又不会对语音信号产生任何其他影响。但是，不应采用单频道降噪方法（如频谱减法），因为这些方法会对语音识别精度造成不利影响。同样，不应采用自动增益控制、残留回声抑制，或者试图清除波形中的非语音周期。
- **信号增益**：在调整信号电平时，配件应该在所有情况下避免出现人工噪声、信号丢失和削波。不建议使用自动增益控制。如果配件会调整信号增益，则增益应当在每句话中保持不变。在配件上行链路输出端测量的标称电平应当为 A 加权 -30 dB ±2 dB 均方根 (RMS)，以相对于满量程 (dBFS(A)) 的单位表示。如果使用 ITU 测量规程，标称电平可能为 13 dB ±2 dB SLR。
- **信噪比 (SNR)**：平均 SNR 应当大于 20 dB。如果低于 20 dB，识别率将受到影响。
- **混响**：应保持 RT60 时间小于 200 ms。

39.5.1 宽带语音支持 [英语]

使用 Siri 的配件应当支持 16 kHz 宽带语音音频，以获得更好的音频质量和语音识别性能。有关宽带语音音频的详细信息，请参阅“蓝牙免提描述文件 1.6”规范。支持窄带音频信号 (8 kHz)，但不建议使用。

39.6 优化 Siri 体验 [英语]

Siri 会话开始时不应伴有配件本地的哔哔声或语音指示（例如宣告“...正在进行语音拨号...”）。当 Siri 会话变为活跃状态时，设备会发出两声哔哔声，表示 Siri 已准备好接收指令。添加额外的声音通知只会在系统中插入延迟。

配件应当等待设备结束每个 Siri 会话。

除非有用户交互指示，否则配件不应发送 `AT+BVRA=0` 命令。

配件应该能够在 SCO 连接激活后 200 ms 内呈现音频，确保用户始终能够听到 Siri 的介绍性哔哔声。

39.7 常见的 Siri 应用 [英语]

Siri 可以发送信息、查找兴趣点、拨打电话等等。随着 Siri 功能不断增加，在初始集成后可能会出现其他用例。在 Siri Eyes Free 模式下，由于用户体验针对驾驶情景进行了量身定制，因此可能无法使用某些用例。

2023/10/10 | 版权所有 © 2023 Apple Inc. 保留所有权利。

39.7.1 连接建立后的初始化规程 [英语]

图 39-5（第 169 页）概述了配件必须触发才能在设备上使用 Siri 的规程。在建立 HFP 描述文件连接后，配件应该首先通过发送 AT+XAPL 来启用自定 Siri 命令并提供所支持的功能。从设备收到确认后，配件应当通过 AT+APLSIRI? 确定 Siri 的可用情况。

搭载蓝牙信息娱乐系统的车辆也可以在初始化期间启用 Siri Eyes Free 模式。图 39-6（第 169 页）对此进行了详细说明。

图 39-5 Siri 初始化规程

图 39-6 采用 Siri Eyes Free 模式时的 Siri 初始化规程

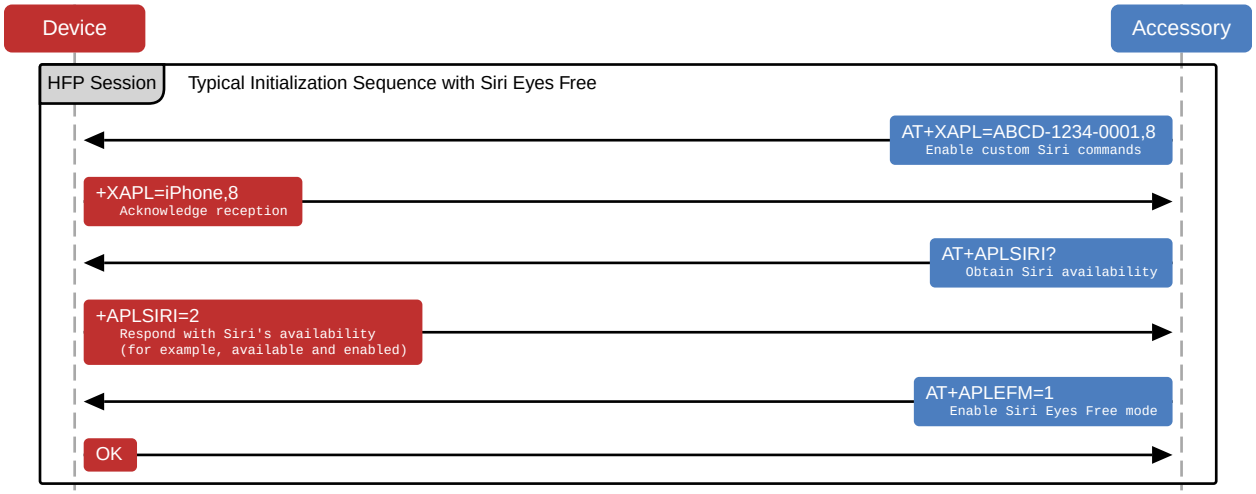

39.7.2 使用 Siri 拨打电话 [英语]

在用户请求时，Siri 可以拨打电话。设备将发起 HFP 呼叫信号，以建立电话呼叫，如“蓝牙（第 191 页）”中所述。在设备发送信号时，配件应该能够在 Siri 会话期间或之后的任何时间转换到免提拨号。

2023/10/10 | 版权所有 © 2023 Apple Inc. 保留所有权利。

39.7.3 使用 Siri 进行音频路由和媒体播放 [英语]

Siri 可以控制设备上的媒体播放。如果 Siri 确定用户想播放或暂停音乐，Siri 将启动、暂停或恢复媒体播放。设备将向配件发送通知，以指示播放状态和任何相关音轨信息的变化。配件应该响应这些通知，根据请求启动或停止音乐播放，并更新正确的播放状态（例如随机播放、重复播放）。

在 Siri 会话结束后，配件不应强制更改播放状态。如果启动 Siri 会话前正在播放音乐，则会话结束后应该继续播放音乐；如果当时音乐播放已暂停，则会话结束后音乐播放仍应该保持暂停。

在 Siri 开始播放音乐后，配件应该设置当前音频路由以匹配音频源，具体取决于从设备接收音频的方式（使用蓝牙或有线连接）。

可用的媒体播放通知取决于所使用的音频路由：

- 蓝牙音频路由应该使用“通知（第 197 页）”和“使用 A2DP 描述文件接收音频数据（第 199 页）”中描述的方法。
- 有线音频路由应该使用 iAP2。

39.7.4 使用 Siri 获取导航指示 [英语]

Siri 可以发起主动路线指导，提供导航指示。如果设备是活动源并已在播放音乐，则导航指示将作为音频流的一部分进行混音。如果设备未在播放音乐，则配件应当能够将导航指示与活动音频源混音。

设备将通知配件仅通过蓝牙播放导航指示。有关如何区分音乐播放和导航指示的详细信息，请参阅“通知（第 197 页）”。

39.8 在车内通过 Siri Eyes Free 进行用户交互 [英语]

使用 Siri Eyes Free 模式的车辆应该将 Siri 体验与现有车载娱乐系统和控制系统相集成。车辆应当提供便捷的界面来发起、继续和结束 Siri 会话。在 Siri 会话开始运行后，车辆应该显示正在使用语音识别的视觉提示。图 39-7（第 171 页） 概述了应该如何设计 Siri 交互。

2023/10/10 | 版权所有 © 2023 Apple Inc. 保留所有权利。

图 39-7　Siri Eyes Free 用户交互

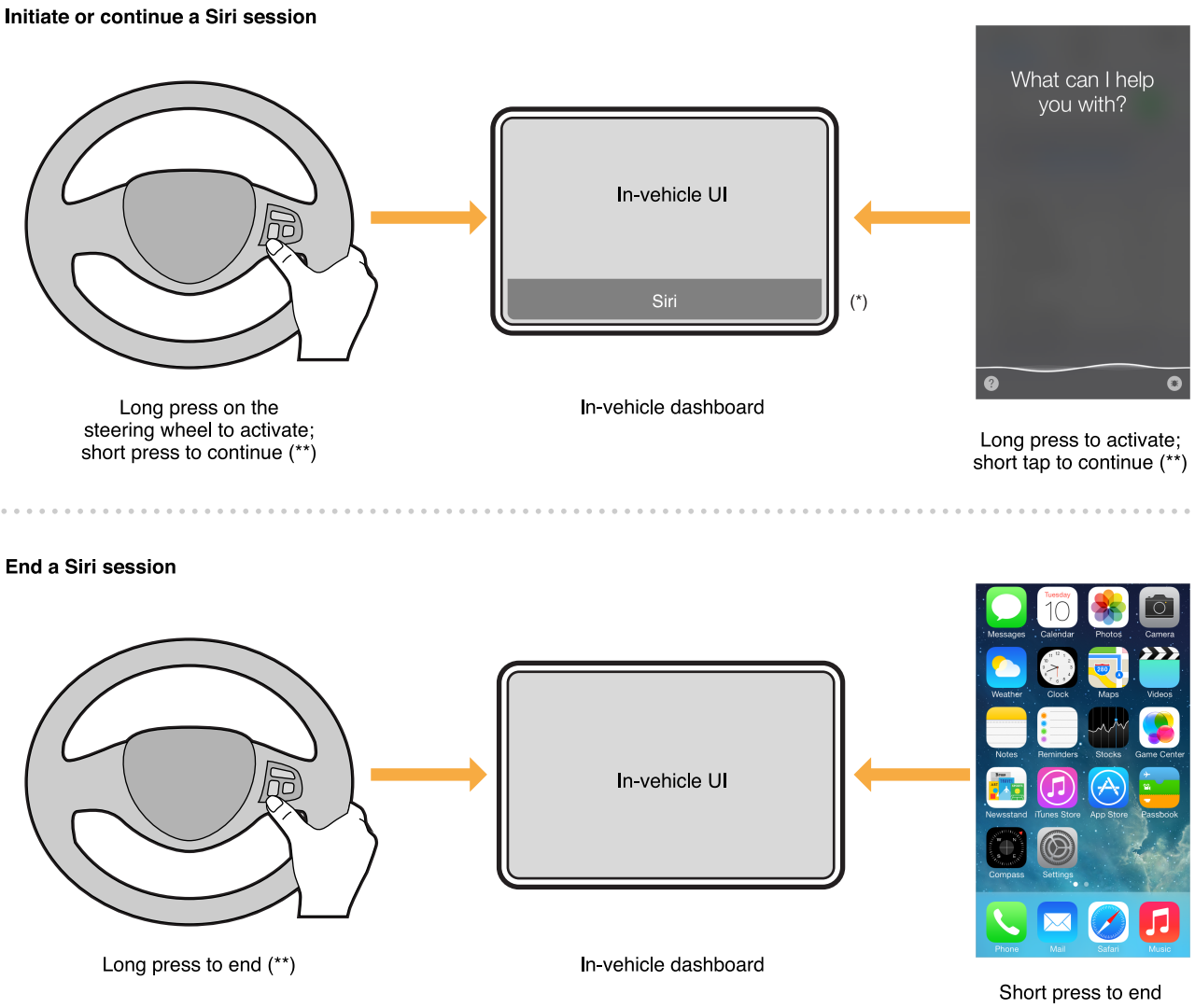

如图 39-7（第 171 页） 中所示：

- (*) 如果配件希望指示 Siri 处于活跃状态，则应该采用以下任一方式：
  - 显示单词“Siri”（大写），而没有其他文字或图标。
  - 使用与 Siri 麦克风图标差异较大的通用文字或图标。
- (**) 如果车辆装有方向盘控制键，则方向盘应该有一个专用按钮或能够通过长按按钮来启动、继续和结束Siri会话。长按按钮的时间不应长于600ms。如果没有方向盘控制键，则应该在车载用户界面中提供一个软按钮来启动、继续或结束 Siri 会话。

当车辆启用 Siri Eyes Free 模式时，设备将不会在屏幕上显示任何 Siri 内容。如果从车辆激活 Siri 会话时设备处于锁定状态，它将保持锁定状态并且屏幕不会打开。如果用户在 Eyes Free 会话期间解锁或手动激活设备，则会显示通知，表明设备处于活动的 Siri 会话中，但不会显示 Siri 的内容。

2023/10/10 | 版权所有 © 2023 Apple Inc. 保留所有权利。

39.9 从设备启用/停用 Siri [英语]

用户可以从设备的“设置”菜单中停用或启用Siri。当Siri被停用时，语音控制将成为设备上的识别引擎，并会被默认触发。配件可以选择：

- 激活语音控制（与激活 Siri 的方式相同），如图 39-8（第 172 页） 所示。
- 显示警告信息，不向设备发送激活命令，如图 39-9（第 172 页） 所示。

图 39-8 Siri 被停用 - 激活语音控制

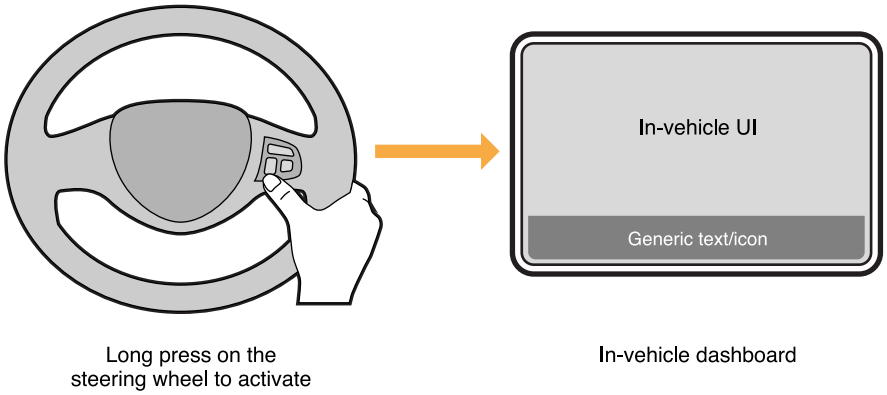

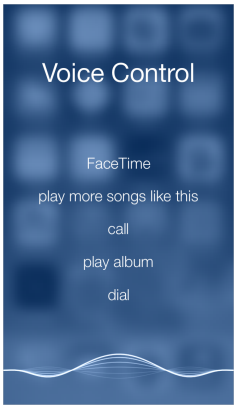

图 39-9 Siri 被停用 - 显示警告信息

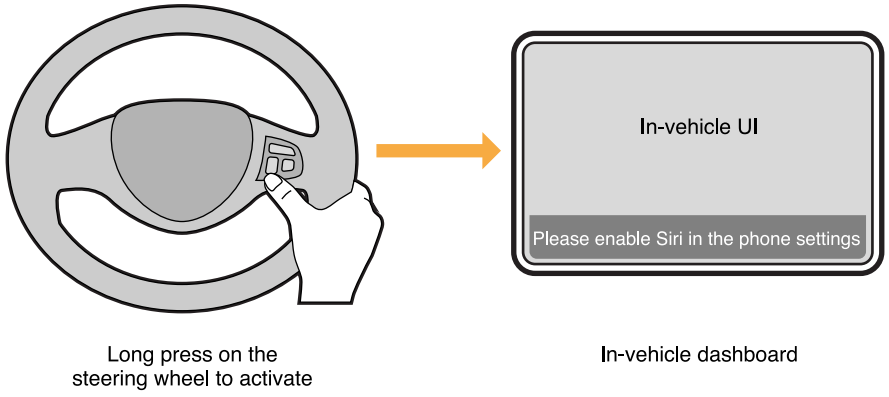

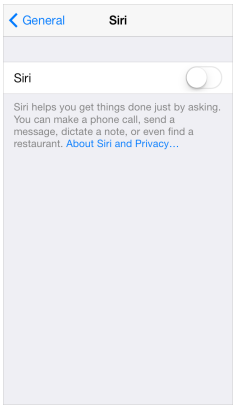

39.10 测试规程 [英语]

39.10.1 Siri Eyes Free [英语]

以下测试规程适用于采用 Siri Eyes Free 交互的配件。

理想的测试操作员应该是以北美英语为母语的人。如果操作员的母语不是北美英语，请将 Siri 设置为操作员的母语，并将提供的短语翻译为对应语言。

39.10.1.1 通用 [英语]

1. 进行配对，并在 iPhone 和车载设备之间建立蓝牙免提描述文件 (HFP) 连接。使用车辆方向盘上的按钮激活 Siri（例如按住）：
   a. 观察在 Siri 会话开始后，iPhone 屏幕保持非活跃状态（如果手动激活屏幕，设备上将显示一个视觉指示符）。
   b. 确保可通过车载扬声器清楚地听到 Siri 启动音效。
   c. 观察车载用户界面 (UI) 上的可视通知，指示 Siri 会话处于活跃状态（例如，文本通知、屏幕上的 UI）。
2. 使用车辆方向盘上的按钮激活 Siri 并说“给皮特发信息。你好吗？”。在说出信息期间，按下车辆方向盘上的按钮以取消 Siri：
   a. 确保 iPhone 屏幕保持非活跃状态（如果手动激活屏幕，手机上的视觉指示符将消失）。
   b. 验证车载 Siri UI 交互是不是消失，并且车载设备返回至进行 Siri 交互之前的先前状态。
3. 使用车辆方向盘上的按钮激活 Siri 并说“旧金山的天气怎么样？”。等待 Siri 回应天气预报。在天气预报播报完成后，使用车辆方向盘上的按钮恢复 Siri 并说“纽约呢？”：
   a. 确认手机上的视觉指示符仍然处于活跃状态。
   b. 聆听 Siri 的启动音效。
   c. 验证车载 UI 是否指示 Siri 会话处于活跃状态。
   d. 验证 Siri 会不会回应纽约的天气预报。
4. 如果车载 UI 在屏幕上提供用于激活/取消/恢复 Siri 的控制键，请使用所有屏幕控制键重复步骤 (1) 至 (3)。
5. 使用车辆方向盘上的按钮激活 Siri 并说“现在几点？”。聆听当前时间，并不要与 Siri 或 iPhone 交互。在 5 秒后：
   a. 观察手机上的视觉 Siri 会话指示符已消失。
   b. 验证用于 Siri 互动的车载 UI 是否已消失。
   c. 验证车载设备是否返回至进行 Siri 互动之前的先前状态。
6. 通过车载扬声器收听 FM 广播（例如，没有活动的 A2DP 流）。按住手机的主屏幕按钮以从手机激活 Siri：
   a. 观察车载 UI 上的可视通知，指示 Siri 会话处于活跃状态（文本通知、屏幕上的 UI 等）。
   b. 观察手机屏幕上的 Siri 互动并询问“现在几点？”。
   c. 在 Siri 回应后，按下手机的睡眠/唤醒按钮或侧边按钮来再次锁定手机，以此取消 Siri 会话。
7. 在手机上，前往“设置”并关闭 Siri。从车载设备激活 Siri。根据实际的实施情况，观察下列任一情况：(a)“语音控制”启动，而不是 Siri；(b) 车载设备显示 Siri Eyes Free 不可用的警告。
8. 在手机上，前往“设置”并开启 Siri。验证可不可以通过车载设备和手机的主屏幕按钮激活/取消 Siri。
9. 使用手机上的“设置”关闭“蓝牙”。验证 Siri 是不是无法启动。
10. 使用手机上的“设置”重新开启“蓝牙”。验证蓝牙 HFP 描述文件是不是重新连接，以及可不可以通过车载设备和手机的主屏幕按钮激活/取消 Siri。

2023/10/10 | 版权所有 © 2023 Apple Inc. 保留所有权利。

11. 确认手机状态栏上未显示配件电池电量状态指示符图标。

39.10.1.2 Siri 对话 [英语]

1. 使用车辆方向盘上的按钮激活 Siri 并说“给 *<插入联系人姓名>* 发送短信”。当 Siri 提示“你想说什么？”时，请口述一条短信。在 Siri 复述口述的信息后，请说“读一下”。在 Siri 再次复述你口述的信息后，请再说“读一下”。如此重复约 5 次，以确保车载设备能够处理长时间的 Siri 交互。最后说“发送”并验证信息是不是已发送。验证可不可以听到启动音效，以及信息是不是已发送。在 Siri 会话关闭后，验证音频播放是不是恢复到激活 Siri 会话前的状态（即：如果当时已暂停播放音频，则保持暂停状态；如果当时正在播放，则恢复播放）。
2. 使用车辆方向盘上的按钮激活 Siri 并询问路线。继续对话，直到导航开始。验证 Siri 会话是不是已关闭，以及音频播放是不是恢复到激活 Siri 会话前的状态（即如果当时已暂停播放音频，则保持暂停状态；如果当时正在播放，则恢复播放）。
3. 使用车辆方向盘上的按钮激活 Siri，然后说“在网上搜索北极熊”。验证 Siri Eyes Free 模式是不是已开启，以及这个用例是不是被 Siri 阻止。在某些实施中，车辆必须处于运动状态，车载套件才能激活 Siri Eyes Free 模式。
4. 使用车辆方向盘上的按钮激活 Siri，然后说“慕尼黑现在几点？”。在 Siri 回答之后，在约 5 秒内，恢复 Siri（例如通过短按方向盘上的按钮）并验证 Siri 是不是再次激活。说“旧金山呢？”。重复询问（不同的城市），并验证是不是只要在最后一次响应的 5 秒钟内按下方向盘按钮，就可以无限地持续操作。

39.10.1.3 蓝牙 HFP A2DP 音乐 [英语]

1. 建立蓝牙 A2DP 连接并在车载设备上切换到蓝牙音频源。激活 Siri 并说“下一首歌”。验证是不是跳到下一首歌并且音频正通过车辆扬声器播放。验证 Siri 车载 UI 是不是消失，并且车载设备返回初始状态。
2. 激活 Siri 并说“暂停音乐”。验证在 Siri 退出后，音频是不是保持暂停状态。验证 Siri 车载 UI 是不是消失，并且车载设备返回初始状态。
3. 在车载设备上暂停音乐播放（使用 AVRCP 命令）。激活 Siri 并说“现在几点了？”。验证在 Siri 会话退出后，音乐播放是不是保持暂停状态。验证 Siri 车载 UI 是不是消失，并且车载设备返回初始状态。
4. 在车载设备上切换到 FM 广播。激活 Siri 并说“放一首歌曲”。验证车载设备是不是能够自动切换到蓝牙音频并开始播放 iPhone 音乐。验证是不是能够听到所选曲目的开头（例如，没有跳过音频数据包）。验证 Siri 车载 UI 是不是消失，并且车载设备返回初始状态。
5. 激活 Siri 并说“随机播放所有歌曲”。验证车载设备是不是正确更新了“正在播放”音轨信息。验证 Siri 车载 UI 是不是消失，并且车载设备返回初始状态。
6. 激活 Siri 并要求播放特定艺人或标题的歌曲。验证在音乐开始后，Siri 会话是不是退出。确认在屏幕上显示了正确的元数据。验证 Siri 车载 UI 是不是消失，并且车载设备返回初始状态。

2023/10/10 | 版权所有 © 2023 Apple Inc. 保留所有权利。

39.10.1.4 拨打电话 [英语]

1. 激活 Siri 并呼叫拥有多个电话号码（例如，家庭和移动电话）的联系人。等待 Siri 回复并询问要拨打哪个电话号码。回答“家庭”。验证车载设备是不是能够正确处理呼叫转换，以及车辆屏幕上显示的所有 Siri UI 是不是已消失。
2. 在 iPhone 播放音乐期间，激活 Siri 并说“给 *（插入要呼叫的联系人）* 打电话”。验证车载设备能够正确地处理呼叫转移。验证在对方应答并终止呼叫后，iPhone 音乐是不是恢复播放。验证 Siri 车载 UI 是不是消失，并且车载设备返回初始状态。
3. 在 iPhone 播放音乐期间，启动 Siri 并说“给 *（插入要呼叫的联系人）* 打电话”。验证车载设备能够正确地处理呼叫转移。验证在己方（即车载设备上）应答并终止呼叫后，iPhone 音乐是不是恢复播放。验证 Siri 车载 UI 是不是消失，并且车载设备返回初始状态。
4. 进行 Siri 会话期间，在车载设备上接到来电。验证车载设备是不是能够正确处理呼叫信号，以及在接通呼叫后会不会转换到电话 UI。验证 Siri 车载 UI 是不是消失，并且车载设备返回初始状态。

39.10.1.5 蓝牙 + 有线 iAP2 [英语]

1. 使用闪电接口将设备 (iPhone 5) 连接到车载设备。切换到 iPod 音乐并确认音频正在播放。激活 Siri 并说“下一首歌”。验证是不是已跳到下一首歌并且车载设备正确显示了音轨元数据。验证 Siri 车载 UI 是不是消失，并且车载设备返回初始状态。
2. 从车载设备 UI 中，选择只有一首歌的播放列表并开始播放。使用车辆方向盘上的按钮激活 Siri 并说“播放……*<确保选择一首符合以下条件的歌曲并播放：(a) 与只有一首歌的播放列表不属于同一个专辑；(b) 不是对应专辑中索引为 0 的歌曲音轨>*”。验证是不是开始播放新歌曲，并且车载设备正确显示了新歌曲的音轨元数据。验证 Siri 车载 UI 是不是消失，并且车载设备返回初始状态。
3. 在车载设备 UI 上关闭随机播放。然后激活 Siri 并说“随机播放所有歌曲”。验证车载设备 UI 上的随机播放指示符是不是已更新，并且正确显示了正在播放的新歌曲的音轨元数据。验证 Siri 车载 UI 是不是消失，并且车载设备返回初始状态。
4. 在车载设备上切换到 FM 广播。激活 Siri 并说“放一首歌曲”。验证车载设备是不是能够自动切换到 iPod 音频源并开始通过扬声器播放 iPod 音频。验证所选音轨开头是不是没有跳过任何音频。验证 Siri 车载 UI 是不是消失，并且车载设备返回初始状态。
5. 在车载设备上暂停音乐播放（使用 iAP2 命令）。激活 Siri 并说“现在几点了？”。验证在 Siri 会话退出后，音乐播放是不是保持暂停状态。验证 Siri 车载 UI 是不是消失，并且车载设备返回初始状态。
6. 在 iPhone 播放音乐期间，启动 Siri 并说“给 *（插入要呼叫的联系人）* 打电话”。验证车载设备能够正确地处理呼叫转移。验证在对方应答并终止呼叫后，iPhone 音乐是不是恢复播放。验证 Siri 车载 UI 是不是消失，并且车载设备返回初始状态。
7. 在 iPhone 播放音乐期间，启动 Siri 并说“给 *（插入要呼叫的联系人）* 打电话”。验证车载设备能够正确地处理呼叫转移。验证在己方（例如，车载设备上）应答并终止呼叫后，iPhone 音乐是不是恢复播放。验证 Siri 车载 UI 是不是消失，并且车载设备返回初始状态。
8. 在车载设备上暂停音乐播放（使用 iAP2 命令）。启动 Siri 并说“给 *<插入要呼叫的联系人姓名>* 打电话”。验证车载设备能够正确地处理呼叫转移。验证在对方应答并终止呼叫后，iPhone 音乐是不是保持暂停状态。验证 Siri 车载 UI 是不是消失，并且车载设备返回初始状态。

2023/10/10 | 版权所有 © 2023 Apple Inc. 保留所有权利。

40. Wi-Fi 信息共享

[英语]

设备和配件之间可以共享 Wi-Fi 配置信息。

设备可以将 Wi-Fi 配置信息共享给配件。配件可以发起这个过程，但应该经过用户授予相关权限，设备才能共享这个信息。设备只能共享关于当前所连 Wi-Fi 网络的信息，并且这项功能不负责由路由器配置的其他访问控制机制，如 RADIUS 或 MAC 地址过滤。

图 40-1　Wi-Fi 信息共享提醒

有关更多信息，请参阅“配件接口规范（第 22 页）”。

协议

41. USB 供电能力供应商请求

[英语]

如果配件是USB主机，并且没有实施iAP2（第187页），则它可以发送Apple专有的USB供应商请求来向设备告知可提供的电量。在这种情况下，配件应该枚举并识别设备的存在，然后发送供应商请求。每次配件枚举设备时，都应该发送供应商请求。

表格 41-1 非 iAP2 配件 USB 嵌入式主机的 USB 供应商请求

域	值	注释
bmRequestType	0x40	设备到主机请求，供应商定义的类型，设备为接收方。
bRequest	0x40	供应商定义的 USB 启用供电能力请求。
wValue	详见注释。	可用充电电流，表示为相对于 500 mA 的偏移量。应该为 500（可用充电电流1000 mA）、1000（可用充电电流1500 mA）、1600（可用充电电流2100 mA）、1900（可用充电电流 2400 mA）或 2500（可用充电电流 3000 mA）。
wIndex	详见注释。	应该与 wValue 的值相同。
wLength	0	预期为 0 字节。

2023/10/10 | 版权所有 © 2023 Apple Inc. 保留所有权利。

42. USB D+/D- 电阻网络

[英语]

如果配件未实施以下任何协议，则可以使用 USB 电阻网络来确定它们的电流容量：

- iAP2（第 187 页）。
- USB 供电能力供应商请求（第 178 页）。
- USB Type-C 电流（第 183 页）。
- USB 供电（第 182 页）。

设备功耗会因环境因素而变化。所有配件电源测试应通过可编程负载而非设备来进行。

42.1 声明电源功能

[英语]

配件应该将 USB D+ 和 USB D- 引脚连接到电阻网络，如图 42-1（第 179 页） 中所示。

图 42-1 USB D+/D- 电阻网络

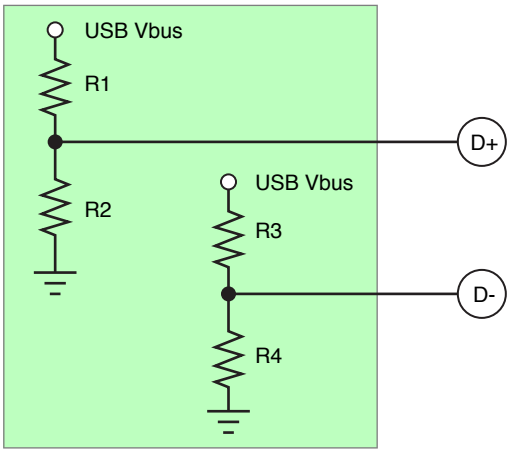

如果配件使用 USB 电阻网络，则每个兼容 iOS 设备的接口都应该有自己的一组电阻器。当所有接口都在使用时，配件应该能提供所需的总电流，而不管接口与设备是不是兼容。

电阻网络应该始终处于连接状态，除非配件使用下列方法之一启用充电或检测设备的存在。在这些情况下，它应该立即提供电阻网络。配件：

- 使用直接用户操作来启用充电。
- 使用接触开关等机电装置检测设备的连接情况。

2023/10/10 | 版权所有 © 2023 Apple Inc. 保留所有权利。

配件不应通过监听 USB D+ 和 USB D- 引脚来检测设备的存在。

用于实施图 42-1（第 179 页） 中所指定网络的所有电阻器的容差应该为 1% 或更好。不应通过使用其他方法驱动 USB D+/D- 引脚的电压来枚举电阻网络。

表格 42-1 USB D+/D- 电阻值

最大电流	R1	R2	R3	R4
3000 mA	43.2 kΩ	49.9 kΩ	24.9 kΩ	49.9 kΩ
2400 mA	43.2 kΩ	49.9 kΩ	43.2 kΩ	49.9 kΩ
2100 mA	43.2 kΩ	49.9 kΩ	75.0 kΩ	49.9 kΩ
1000 mA	75.0 kΩ	49.9 kΩ	43.2 kΩ	49.9 kΩ

42.2 确定电源电流限制 [英语]

配件应该考虑 USB VBUS 电压和电阻容差的变化。

电阻网络值和相应的电流源限值应使用以下规程确定：

1. 使用 ADC 读取 VBUS 电压。如果值小于 4.5 V，则返回未检测到任何电阻器。
2. 在 D+ 和 D- 线路中启用下拉电阻并使用 ADC 读取电压。如果任一电压值小于 1 V，则返回未检测到任何电阻器。
3. 停用 D+ 和 D- 下拉电阻并等待电压恢复到正常值。
4. 使用 ADC 读取 D+ 和 D- 电压（以分别确定 R1 和 R3 的值）：
   - 如果电压大于 2.995 V（基于 1 MΩ 负载阻抗），则假设电阻值为 24.9 kΩ。
   - 如果电压介于 2.320 V 和 2.995 V 之间（基于 1 MΩ 负载阻抗），则假设电阻值为 43.2 kΩ。
   - 如果电压小于 2.320 V（基于 1 MΩ 负载阻抗），则假设电阻值为 75.0 kΩ。
5. 根据表格 42-2（第 180 页） 确定最大电流。
6. 如果无法确定电阻值，请继续根据“USB 电池充电规范 1.2 版 (*USB Battery Charging Specification, Release 1.2*)”确定可用的功率。

表格 42-2 USB D+/D- 电阻值

最大电流	R1	R2	R3	R4
1000 mA	24.9 kΩ	49.9 kΩ	24.9 kΩ	49.9 kΩ
1000 mA	24.9 kΩ	49.9 kΩ	43.2 kΩ	49.9 kΩ
1000 mA	24.9 kΩ	49.9 kΩ	75.0 kΩ	49.9 kΩ
3000 mA	43.2 kΩ	49.9 kΩ	24.9 kΩ	49.9 kΩ
2400 mA	43.2 kΩ	49.9 kΩ	43.2 kΩ	49.9 kΩ
2100 mA	43.2 kΩ	49.9 kΩ	75.0 kΩ	49.9 kΩ
1000 mA	75.0 kΩ	49.9 kΩ	24.9 kΩ	49.9 kΩ

最大电流	R1	R2	R3	R4
1000 mA	75.0 kΩ	49.9 kΩ	43.2 kΩ	49.9 kΩ
500 mA	75.0 kΩ	49.9 kΩ	75.0 kΩ	49.9 kΩ

2023/10/10 | 版权所有 © 2023 Apple Inc. 保留所有权利。

43. USB 供电

[英语]

如果配件通过 USB 供电 (USB-PD) 直接供电或从 USB-PD 来源获得电能，则应该符合“USB 供电规范修订版 3.1，版本 1.3 (*USB Power Delivery Specification, Revision 3.1, Version 1.3*)”中的规定。

实施 USB-PD 的配件应该包含一个通过 USB-IF 认证的 PD 控制器，并且有 USB-IF 提供的*硅*测试 ID，详见 https://www.usb.org/products。

Apple 推荐使用 GRL-USB-PD-C2（请参见 https://www.graniteriverlabs.com/en-us/test-solutions/protocol-power-test-solutions/usb-pd-c2）进行 USB PD 测试和合规性验证。

2023/10/10 | 版权所有 © 2023 Apple Inc. 保留所有权利。

44. USB Type-C 电流

[英语]

如果配件使用 USB-C 电流直接供电或从 USB-C 电流源获得电能，则应该符合“USB Type-C 连接线和接口规范 2.2 版 (*USB Type-C Cable and Connector Specification Release 2.2*)”第 4.6.2 节中的规定。

Apple 推荐使用 GRL-USB-PD-C2（请参见 https://www.graniteriverlabs.com/en-us/test-solutions/protocol-power-test-solutions/usb-pd-c2）进行 USB Type-C 电流测试和合规性验证。

2023/10/10 | 版权所有 © 2023 Apple Inc. 保留所有权利。

45. 高级音频分发描述文件 (A2DP) [英语]

配件可以通过蓝牙（第 191 页）实施“高级音频分发描述文件 (Advanced Audio Distribution Profile) (A2DP)”，以从 iOS 设备和 Mac 电脑接收音频。

设备的音频内容大致可以分为两类：

- 来自音乐、视频或游戏应用程序的音频内容。
- 系统生成的提醒和通知提示音。

A2DP 通常用于扬声器和耳机。

实施 A2DP 的配件应该满足“蓝牙（第 191 页）”中所述的所有要求。

45.1 蓝牙 A2DP 规范 [英语]

实施高级音频分发描述文件的配件都应该满足“蓝牙高级音频分发描述文件 (*Advanced Audio Distribution Profile*)”规范 1.2 版的要求。

45.1.1 AVDTP 事务 [英语]

配件应该在设备的 5 秒 RTX_SIG_TIMER 到期之前，响应“音频/视频分发传输协议 (Audio/Video Distribution Transport Protocol, AVDTP)”信号事务，否则设备将终止信号频道。请参阅“蓝牙音频/视频分发传输协议 *(Bluetooth Audio/Video Distribution Transport Protocol)*”1.3 版第 6.2 节的“事务模式”和 6.4 节的“信号命令集”。

45.2 子带编解码器 (SBC) [英语]

表 45-1（第 184 页）中列出了适用于 iOS 设备和 Mac 电脑的 SBC 编解码器专用信息元素，这些元素的具体定义详见 A2DP 规范的第 4.3.2 节。

表格 45-1 适用于 iOS 设备和 Mac 电脑的子带编解码器信息元素

元素	值
采样频率	44,100 Hz
频道模式	立体声

2023/10/10 | 版权所有 © 2023 Apple Inc. 保留所有权利。

元素	值
块长度	16
子带	8
分配方法	响度
Bitpool 范围	2 至 53。适用于 iOS 设备和 Mac 电脑的配件应当支持 53。

45.3 MPEG 2/4 AAC 编解码器 [英语]

设备支持“高级音频分发描述文件 (Advanced Audio Distribution Profile)”规范 1.2 版第 4.5 节中定义的非强制性编解码器 MPEG-2/4 AAC。除 SBC 之外，配件还应当使用 AAC 编解码器，因为 AAC 可以为给定比特率提供更高的音频质量。

> **注：**
> 以下规范提供了 Apple 实施 MPEG-2/4 AAC 编解码器的详细信息。遇到冲突时，以 A2DP 规范为准。

表 45-2（第 185 页） 中列出了适用于设备的 MPEG 2/4 AAC 编解码器专用信息元素，这些元素的具体定义详见 A2DP 规范的第 4.5 节。

表格 45-2 适用于设备的 MPEG-2/4 AAC 编解码器信息元素

元素	值
对象类型	MPEG-2 AAC LC
采样频率	44,100 Hz
频道数	2
比特率	264,630 bps
VBR	0

设备中的 AAC 音频流数据包具有表 45-3 （第 185 页）中所示的结构。

表格 45-3 适用于设备的 AAC 音频数据包

L2CAP	AVDTP	MPEG-4 LATM	MPEG-4 AAC
报头	报头	AudioMuxElement	音频有效负载

AAC 媒体有效负载格式（定义详见 A2DP 规范的第 4.5.4 节）使用 LATM 进行格式化（定义详见“*IETF RFC 3016*”的第 4 节）。以下备注适用于表 45-3（第 185 页） 中显示的数据包栏位。

- 对于每个设备的 AAC 流频道，推荐的 L2CAP MTU 值为 885 字节。

- AVDTP 报头在 RFC 3016 的图 4 中显示为 RTP 报头，并且是“蓝牙音频/视频分发传输协议 (*Bluetooth Audio/Video Distribution Transport Protocol*)”1.2 版第 7.2.1 节中定义的报头。
- `AudioMuxElement` 与 RFC 3016 中的 RTP 有效负载相同。它在 ISO/IEC 14496-3:2009 第 1 分类第 1.7.3 节的表 1.41 中定义。按照 RFC 3016 第 4.1 节的建议，`AudioMuxElement` 的 `muxConfigPresent` 参数设置为 1（带内模式）。按照 RFC 3016 第 4.3 节的建议，每个 AVDTP 数据包中只有一个 `AudioMuxElement`。
- 按照 A2DP 规范第 4.5.4 节的建议，音频有效负载使用 MPEG-4 进行编码。
- 配件应支持 AAC-LC VBR 并能够处理比特率变化，而不会出现音频间隙。设备将会根据内容改变 AAC 比特率。

45.4 测试规程 [英语]

45.4.1 音频质量 [英语]

验证在下面每种情况中都没有音频质量问题：

1. 从“音乐”app 流播放音乐。
2. 从“音乐”app 中的广播电台流播放音乐。
3. 使用 Apple“播客”app 流播放音频。

45.4.2 音频切换 [英语]

1. 在 A2DP 流式传输期间，将音频切换回设备，再切换回配件。
2. 验证音频是否路由到预定来源，并且切换回蓝牙时音质良好。

45.4.3 HFP 交互 [英语]

1. 在 A2DP 期间拨打/接听电话。
2. 验证音频是否在通话期间暂停播放，并在通话结束后继续播放。

45.4.4 Siri [英语]

1. 在 A2DP 期间触发 Siri。
2. 验证音频是否在 Siri 会话结束后继续播放。

45.4.5 视频播放 [英语]

1. 在观看视频时流式传输 A2DP。
2. 验证音频/视频同步和质量是否良好。

2023/10/10 | 版权所有 © 2023 Apple Inc. 保留所有权利。

46. iAP2

[英语]

配件可以使用 iAP2 协议来访问设备的高级功能，例如：

- 使用外部配件协议（第 133 页）与第三方 iOS/iPadOS App 安全地通信。
- 利用媒体资料库访问（第 159 页）和正在播放更新（第 161 页）访问媒体资料库并检索专辑插图。
- 利用 App 启动（第 120 页）来启动 App。
- 利用 App 发现（第 119 页）来发现兼容的 App。
- 利用 App 匹配（第 121 页）帮助用户在 App Store 中查找兼容的 App。
- 利用位置信息（第 137 页）来提供 GNSS 位置数据。
- 支持通过带外蓝牙配对（第 162 页）和 Wi-Fi 信息共享（第 176 页）进行连接。

有关更多信息，请参阅“配件接口规范（第 22 页）”。

2023/10/10 | 版权所有 © 2023 Apple Inc. 保留所有权利。

47. 人机接口设备 (HID) [英语]

设备可以接受来自人机接口设备 (HID) 配件的输入并向 HID 配件发送输出，这些 HID 配件包括外部键盘、触控板、鼠标和游戏控制器等。此功能适用于设备系统范围内所有的 App，并支持 iOS、iPadOS 和 tvOS 中内置的功能。如果配件旨在为特定第三方 App 提供人机输入事件，那么配件应改为采用“外部配件协议”功能，有关更多信息，请参阅“配件接口规范（第 22 页）”。

HID 协议可通过以下方式来实施：

- USB
- 蓝牙

47.1 要求 [英语]

支持 HID 协议的配件应符合以下要求：

- 配件只能发送与相应 HID 描述符中声明的实体或虚拟控制表面的更改相关的 HID 报告。
- 如果相应实体或虚拟控制表面的状态没有发生任何更改，配件不应发送 HID 报告。例如，如果用户没有按下专用的“播放/暂停”按钮，配件绝不应生成“播放/暂停”事件。
- 每个 HID 报告应包含相应 HID 描述符中所述的正确字节数。
- 配件不应在发送 HID 报告之后预期或假定设备中发生相应的状态更改。
- 除非另有说明：
  - 配件应能够生成和接收配件 HID 描述符中声明的所有 HID 用法。
  - 配件声明的 HID 用法应一对一直接映射到实体或虚拟控制表面。例如，标有“播放/暂停”的按钮应发送“播放/暂停”HID 用法，而不会发送“播放”或“暂停”用法。旋钮、控制杆和方向控制板等复合控件可能会被视为多个控制表面。例如，顺时针旋转和逆时针旋转可能会映射到单独的HID用法。
  - 生成 HID 报告的实体或虚拟控制表面应标有与设备行为结果对应的适当的图标或文字。例如，“播放/暂停”按钮应标有“播放/暂停”文字或“播放/暂停”图标。
  - 配件应针对相应实体或虚拟控制表面上进行的一个直接用户操作发送一个 HID 报告。例如：
    - 当用户按下一个按钮，配件应向设备发送 HID 报告“已按下按钮”。
    - 当用户松开一个按钮，配件应向设备发送 HID 报告“已松开按钮”。

47.1.1 报告描述符 [英语]

当填充数据包以使其在字节边界内对齐时，每个主要项目的标签（输入、输出或功能）都应标记为常量。填充位应设置为 0。

2023/10/10 | 版权所有 © 2023 Apple Inc. 保留所有权利。

在定义变量类型输入/输出字段时，应满足以下任一条件：

- Report Count 数值应与指定的用法编号相对应。
- Report Size 应为 8，Report Count 应对应于多字节二进制大对象的大小。

47.1.2 USB [英语]

如果通过 USB 实施 HID，配件应符合“人机接口设备 1.11 设备分类定义”要求，请参阅 https://www.usb.org/hid。

47.2 测试规程 [英语]

47.2.1 通用 [英语]

1. 验证配件有没有生成和接收组件 HID 描述符中声明的所有 HID 用法。
2. 验证配件在控制表面状态没有任何更改的情况下没有发送 HID 报告（即没有进行 HID 报告轮询）。
3. 验证有没有任何配件的实体或虚拟控制表面生成了配件 HID 用法，并且控件标有与设备行为结果对应的适当的图标或文字（例如，“播放/暂停”按钮标有“播放/暂停”文字或“播放/暂停”图标）。
4. 验证 HID 用法是不是一对一映射到实体或虚拟控件（例如，“播放”按钮只会发送“播放”用法，不会发送“播放/暂停”用法）。
5. 验证配件是不是针对相应实体或虚拟控制表面上进行的一个直接用户操作发送一个 HID 用法报告。例如，当用户按下一个按钮，配件会发送用法报告“已按下按钮”，当用户松开按钮，配件会发送另一个用法报告“已松开按钮”。

2023/10/10 | 版权所有 © 2023 Apple Inc. 保留所有权利。

传输

48. 蓝牙 [英语]

集成蓝牙技术的配件应该符合本章所述的要求。

配件应支持“蓝牙核心规范 (*Bluetooth Core Specification*)”2.1 版 + EDR 或更高版本。

48.1 增强数据速率 [英语]

“蓝牙 2.0 (*Bluetooth 2.0*)”规范中引入的“增强数据速率 (EDR)”功能使配件能够更高效地进行通信。出于以下原因，配件应该使用 EDR：

- 与基本数据速率 (BDR) 相比，EDR 能提供更高的数据速率。
- EDR 能提高通信效率，在更短的时间内传输更多数据位。
- EDR 能减少传输每个数据位的功耗。
- EDR 通过缩短广播时间，能改善与 Wi-Fi 和其他蓝牙配件的共存情况。
- EDR 能提高多点配置的性能。

48.2 自适应跳频 [英语]

“蓝牙 1.2 (*Bluetooth 1.2*)”规范中引入的“自适应跳频 (AFH)”能够改善与 Wi-Fi 和其他连接的蓝牙配件的共存情况。配件应该使用 AFH。

48.3 低功耗监听模式 [英语]

尽可能降低功耗对所有移动设备来说都非常重要，因此配件：

- 应该支持并应当请求蓝牙监听模式。
- 应接受监听模式请求并支持蓝牙规范中的有效参数。
- 应该支持 15 ms 的监听间隔。
- 应该支持低耗电监听模式。
- 建立监听后不应重新协商监听模式。
- 应使用以下监听模式值：
  - 最大间隔：15 ms
  - 最小间隔：15 ms
  - 监听尝试次数：1

2023/10/10 | 版权所有 © 2023 Apple Inc. 保留所有权利。

- 监听超时：0

兼容 iOS 设备和 Mac 电脑的配件应当尽可能使用监听模式，尤其是在通过蓝牙链路传输很少或不传输数据时。除功耗优势外，监听模式还有利于通过 Wi-Fi 更好地共享天线。

监听模式参数特定于使用模式和蓝牙描述文件。配件应请求监听模式，并为特定的使用模式提供适当的参数。如果配件不发送监听模式请求，设备可能会发送监听模式请求。当设备发送监听模式请求时，配件应该接受这个请求及参数，而不进行协商。

如果配件请求监听模式，那么配件应该将监听间隔设置为小于蓝牙基带链路监控超时（第193页）的三分之一，以使蓝牙链路不易受到干扰。为了提高链路稳健性，配件应当使用较短的监听间隔，而不是使用多个监听尝试。

监听间隔为1秒或更长时间的链路要求开放一个较大的关联窗口，在计算监听尝试次数时必须考虑这个窗口。当监听间隔短于 1 秒时，多个监听尝试可以提高链路稳健性，但会增加功耗。

48.4 角色和拓扑管理 [英语]

配件应：

- 接受设备角色转换请求。
- 在设备拒绝角色转换请求时，继续进行连接。

在蓝牙连接下，有两个实体：

- 一个是中控实体，负责建立共有时钟和调频同步参考。
- 一个是外设实体，负责与中控实体同步。

一个中控实体可以与多个外设实体同步，由此形成微微网。一个中控实体也可以成为另一个中控实体的外设实体，由此创建散射网。

同时连接多个 iOS 设备或 Mac 电脑的配件应该支持创建散射网。

由于设备必须在微微网之间切换角色，所以散射网会导致出现一些周折，进而浪费宝贵的带宽。有效管理网络拓扑对于实现性能最大化非常重要。设备可能会根据当前的拓扑请求角色转换，而配件应该接受这个请求。设备还可能由于拓扑问题而拒绝角色转换请求，因为次优拓扑可能会降低音频质量和用户体验。

配件应避免请求成为中控实体，因为在发生频率更高的情形下，设备需要成为中控实体。配件若坚持成为中控实体，可能会对整体用户体验产生负面影响。

48.5 扩展查询响应 [英语]

配件应在其扩展查询响应数据包中提供以下信息：

2023/10/10 | 版权所有 © 2023 Apple Inc. 保留所有权利。

- 配件的本地名称（完整或缩写）。
- 发射功率电平。

在蓝牙发现过程中，设备会在配件可用时显示友好名称。“扩展查询响应”让配件可以主动将本地名称和其他信息作为查询响应的一部分进行发送，以提高发现过程的速度和效率。

配件本地名称应当与配件的标签和包装相匹配，不带冒号“:”或分号“;”。如果用户可能会同时遇到多个使用相同名称的配件，配件可以在其本地名称后附加最多六个区分字符，例如序列号或 MAC 地址的后几位数字。如果配件允许用户自定义“本地名称”参数，则应提供恢复出厂默认名称的方法。

48.6 安全简易配对 [英语]

配件应：

- 使用“安全简易配对”。
- 使用数值比较方法（如果配件具有显示屏和输入设备）。

“安全简易配对”大大提高了安全性，是蓝牙 2.1 规范中的一项强制性安全功能。为了防止“中间人”攻击，应尽可能使用“数值比较”关联模型。请参阅“蓝牙核心规范 (*Bluetooth Core Specification*)”版本 2.1 + EDR 中第 1 卷的第 5.4 节。

48.7 配对按钮 [英语]

如果配件带有标有标签的专门配对按钮，则应当使用蓝牙官方品牌。请参阅 https://www.bluetooth.com/develop-with-bluetooth/marketing-branding/。

48.8 设备类别 (CoD) [英语]

iOS 设备和 Mac 电脑使用配件的设备类别来用于 UI 或配置特定功能。配件应该使用蓝牙技术联盟 (SIG) 定义的“主要设备类别”和“次要设备类别”来准确设置自身的设备类别。请参阅“蓝牙核心规范 (Bluetooth Core Specification)”版本 5.0 中第 3 卷 C 部分的第 3.2.4 节。例如，用于车辆中的音频/视频配件应当将“主要设备类别”设置为“音频/视频”，并将“次要设备类别”设置为“汽车音频”。

48.9 链路监控超时 [英语]

链路监控超时功能用于检测配件和设备之间的链路丢失。当配件作为中控实体时，应该将链路监控超时设置为 2 秒或更长时间，以应对 RF 信号的不可预测性，以及满足设备需要服务其他并发无线系统的需求。

2023/10/10 | 版权所有 © 2023 Apple Inc. 保留所有权利。

48.10 延迟报告 [英语]

截至 iOS 8.2，设备支持“蓝牙音频/视频分发传输协议 (Bluetooth *Audio/Video Distribution Transport Protocol*)”1.3 版中指定的“延迟报告”命令。配件应当提供这一信息，以改进视频播放的音频/视频同步。配件不应报告超过 1000 ms 的延迟，延迟更新频率也不应超过每秒 1 次。

48.11 描述文件 [英语]

Apple 蓝牙描述文件知识库文章 https://support.apple.com/zh-cn/102842 提供了设备支持的描述文件的完整列表。蓝牙规范是为这些设备设计兼容配件的起点。以下部分提供了通用描述文件的附加信息和要求，有助于配件开发者取得卓越的成果。

48.11.1 设备 ID 描述文件 (DID) [英语]

配件应：

- 支持“蓝牙设备 ID 描述文件”版本 1.3 或更高版本。
- 使用由蓝牙技术联盟指定的已分配编号规范中的公司标识符作为自身的供应商 ID 值 (VID)，请参阅 https://www.bluetooth.com/specifications/assigned-numbers/。如果制造商没有蓝牙技术联盟公司标识符，蓝牙 HID 描述文件配件可以使用由 USB 开发者论坛 (USB-IF) 分配的 VID，请参阅 https://www.usb.org/getting-vendor-id。
- 使用最终产品制造商的 VID 值。
- 不得使用蓝牙技术联盟分配给 Apple 的公司 ID 或 USB 开发者论坛分配给 Apple 的供应商 ID。
- 使用“供应商 ID 源”栏位来标识哪个组织分配了“供应商 ID”栏位中使用的值。请参阅“蓝牙设备 ID 描述文件规范 (*Bluetooth Device ID Profile Specification*)”的第 5.6 节。
- 使用能够唯一标识产品的 ProductID 值。
- 使用能够唯一标识软件版本的版本值。

设备 ID 记录使设备能够识别远程配件的具体实施细节，用于在与远程配件通信时桥接蓝牙规范的其他解释。设备 ID 记录中的信息必须能够唯一标识正在使用的具体实施细节，这一点非常重要。

对于蓝牙车载套件设备，相同的车载套件可能会用于不同的车型。理想情况下，两个车载套件应当具有不同的 ProductID。但是，只要具有相同的硬件、软件和功能，它们就可以具有相同的 ProductID。如果实现完全不同，它们就应该具有不同的ProductID。配件还可以使用次要设备ID记录来唯一标识产品 ID 或型号。

48.11.2 服务发现协议 (SDP) [英语]

为便于对服务发现协议服务记录进行缓存，配件应：

- 支持 ServiceDiscoveryServer 服务类。
- 支持 ServiceDatabaseState 属性。
  - 每次添加、删除或修改记录中的任何 SDP 服务记录或属性时，属性的值都应该发生变化。

- 属性的值不应根据 RFCOMM 通道协议参数而发生变化。设备在连接时分别查询这些值。

48.11.3 免提描述文件 (HFP) [英语]

支持免提描述文件的配件应当符合“蓝牙免提描述文件规范 (*Bluetooth Hands-Free Profile Specification*)”1.5 版或更高版本的要求。本节中规定了额外的 Apple 要求。

远程配件可以使用“蓝牙*免提描述文件*”来进行语音通讯。为了获得最佳用户体验，远程配件应当支持以下功能，这些功能在蓝牙规范中属于可选功能。

48.11.3.1 远程音频音量控制 [英语]

支持 HFP 的配件应当：

- 支持远程音量控制，使得可以通过设备控制免提配件上的扬声器音量，具体如“蓝牙免提描述文件规范 (*Bluetooth Hands-Free Profile Specification*)”1.5 版中的第 4.28 节所述。
- 在使用 AT+BRSF= 命令发送的“受支持功能”位图中，设置远程音量控制位。

在某些情况下，对于用户来说，通过设备控制输出音量要比直接在远程配件上控制更为方便。例如，汽车上的乘客（或者驾驶员，在停车后）可以使用手机上的音量滑块来控制音量。“蓝牙免提描述文件规范 (*Bluetooth Hands-Free Profile Specification*)”1.5 版的第 4.48.2 节概述了音量控制同步。

48.11.3.2 指示事件报告 [英语]

支持 HFP 的配件应当使用“指示事件报告”，而不是执行重复的状态轮询。

iOS 设备和 Mac 电脑支持 HFP 1.5 版中指定的所有强制和可选指示（服务、呼叫、呼叫设置、呼叫保持、信号、漫游、battchg）。为了尽量减少使用 AT+CIND? 命令进行不必要的状态轮询，远程配件应当通过发送 AT+CMER 命令启用指示事件报告。当状态发生变化时，设备将发送 +CIEV 事件。根据 HFP 规范，远程配件应当使用 AT+CIND=? 和 AT+CIND? 命令来请求初始状态。

48.11.3.3 语音识别激活 [英语]

支持 HFP 的配件应当：

- 支持“蓝牙免提描述文件规范 (*Bluetooth Hands-Free Profile Specification*)”1.5 版的第 4.25 节中所述由 AG 和 HF 发起的语音识别激活。
- 在使用 AT+BRSF= 命令发送的“受支持功能”位图中，设置语音识别激活位。

iOS 设备和 Mac 电脑支持由远程（免提）配件和 iOS（音频网关）配件发起语音识别。

48.11.3.4 回声消除和降噪 [英语]

当免提配件本地执行回声消除和降噪时，配件应当通过发送 AT+NREC 命令关闭设备上的回声消除和降噪功能，具体如“蓝牙免提描述文件规范 (*Bluetooth Hands-Free Profile Specification*)”1.5 版的第 4.24 节中所述。

iOS 设备和 Mac 电脑默认支持回声消除和降噪。如果免提配件执行回声消除和降噪，配件需要关闭设备（音频网关）上的这些功能，以避免由于重复音频处理而导致不必要的音频质量下降。

48.11.3.5 带内振铃 [英语]

支持 HFP 的配件还应当支持“蓝牙免提描述文件规范 (*Bluetooth Hands-Free Profile Specification*)”1.5 版第 4.13.1 节中指定的带内振铃。如果用户在设备上设置了铃声，则免提配件上应当发出相同的铃声。

48.11.3.6 同步连接 [英语]

支持 HFP 的配件应当：

- 支持 eSCO 参数集 S2 和 S3 并接受这些设置的请求。请参阅“蓝牙免提描述文件规范 (*Bluetooth Hands-Free Profile Specification*)”1.5 版的第 5.6 节。
- 在设置同步连接时请求 eSCO 参数集 S2 或 S3。不应请求 eSCO 参数集 S1。
- 在 SCO/eSCO 连接建立后的 40 ms 内渲染音频。

eSCO 数据包类型提供数据包重传，而传统的 SCO 数据包无法重传。这会提高音频质量和用户体验。eSCO 数据包类型 2-EV3 和 3-EV3 在数据包之间提供更长的时间间隔，这样可以提高 Wi-Fi 性能，并为其他并发蓝牙连接留出发送数据的时间。

Apple 强烈建议使用 2-EV3 和 3-EV3 数据包进行 SCO 连接。强烈建议避免使用 HV3 数据包。HV3 数据包需要更多的链路时间，并且不支持音频数据包重传，当存在 RF 干扰时这会影响音频性能。

48.11.3.7 宽带语音 [英语]

支持 HFP 的配件应当支持宽带语音功能，具体如“蓝牙免提描述文件规范 (Bluetooth *Hands-Free Profile Specification*)”1.6 版第 5.7.4 节中所述。如果支持宽带语音，则配件应当支持 T2 链路参数设置。

运行 iOS 5 或更高版本的设备支持宽带语音。如果设备和配件都支持宽带语音，那么设备会将其用于蜂窝移动网络通话、FaceTime 通话和 Siri 等 eSCO 连接情景。

48.11.4 信息访问描述文件 (MAP) [英语]

支持“信息访问描述文件”的配件：

- 应支持信息通知，具体如“蓝牙信息访问描述文件规范 (*Bluetooth Message Access Profile Specification*)”1.1 版第 4.1 节中所述。
- 应在建立连接后立即注册通知，具体如“信息访问描述文件规范 (*Message Access Profile Specification*)”1.1 版第 4.5 节中所述。

2023/10/10 | 版权所有 © 2023 Apple Inc. 保留所有权利。

运行 iOS 13.0 或更高版本的设备支持 MAP 1.1。

48.11.5 音频/视频远程控制描述文件 (Audio/Video Remote Control Profile) (AVRCP) [英语]

支持音频/视频远程控制描述文件 (Audio/Video Remote Control Profile) 的配件应当符合“蓝牙音频/视频远程控制描述文件规范 (*Bluetooth Audio/Video Remote Control Profile Specification*)”1.4 版的要求。本节中规定了额外的 Apple 要求。

48.11.5.1 支持的操作 [英语]

iOS 设备和 Mac 电脑在 passthrough 命令中支持以下 operation_ID：

- Play
- Stop
- Pause
- Fast Forward
- Rewind
- Forward
- Backward

48.11.5.2 重复和随机播放模式 [英语]

处于 AVRCP 目标角色的每个设备都支持重复和随机播放模式。AVRCP 控制器可以使用 `SetPlayerApplicationSettingValue` 来在设备上设置值，使用 `GetPlayerApplicationSettingValue` 来读取值，具体如“蓝牙音频/视频远程控制描述文件规范 (*Bluetooth Audio/Video Remote Control Profile Specification*)”1.4 版第 6.5.4 和 6.4.3 节所述。

48.11.5.3 通知 [英语]

支持 AVRCP 的配件：

- 应注册通知。
- 不应执行重复的设备状态轮询。

处于 AVRCP 目标角色的每个设备都支持注册通知，具体如“蓝牙音频/视频远程控制描述文件规范 (*Bluetooth Audio/Video Remote Control Profile Specification*)”1.4 版第 6.7 节所述。对于以下通知，支持使用命令 `RegisterNotification` 和 `GetPlayStatus`：

- EVENT_PLAYBACK_STATUS_CHANGED
- EVENT_TRACK_CHANGED
- EVENT_NOW_PLAYING_CONTENT_CHANGED
- EVENT_AVAILABLE_PLAYERS_CHANGED
- EVENT_ADDRESSED_PLAYER_CHANGED
- EVENT_VOLUME_CHANGED

2023/10/10 | 版权所有 © 2023 Apple Inc. 保留所有权利。

48.11.5.4 播放/暂停按钮 [英语]

支持 AVRCP 并实施播放/暂停控制表面的配件应该在发送播放或暂停命令之前，使用 AVRCP 通知（第 197 页）确认设备的播放状态。请参见“支持的操作（第 197 页）”。尤其是在以下情况下：

- 如果设备已通知配件它已暂停播放，则按下配件的播放/暂停控制表面应当发送播放命令。
- 如果设备已通知配件它正在播放，则按下配件的播放/暂停控制表面应当发送暂停命令。
- 配件不应根据播放/暂停控制表面被按下的次数来推断设备的播放状态。

48.11.5.5 音量处理 [英语]

支持 AVRCP 的配件应当支持绝对音量，具体如“蓝牙音频/视频远程控制描述文件规范 (*Bluetooth Audio/Video Remote Control Profile Specification*)”1.4 版第 6.13 节中所述。

处于 AVRCP 控制器角色的每个设备都支持音量处理。

48.11.5.6 浏览 [英语]

支持作为 AVRCP 的一部分（以控制器角色）进行浏览的配件：

- 不得在连接时尝试索引或缓存整个库。设备可能包含数以万计的媒体项目，每个媒体项目可能会在层次结构中多次出现。
- 浏览文件夹时不应获取所有项目；仅获取向用户显示的项目。配件可以预先获取一些项目，以提高用户界面的响应速度。
- 不得对项目重新排序（例如，按字母顺序）。
- 不得假设 UID 是静态定义的，特别是在根文件夹中。在未来的版本中，文件夹和项目的排序以及 UID 可能会随时更改。
- 在收到 EVENT_UIDS_CHANGED 通知后，应发送 `SetBrowsedPlayer` 命令。
- 不得假定传递给 `PlayItem` 命令的 UID 会导致媒体播放器播放这个 UID。

目前，只有内置的“音乐”应用支持浏览功能。切换播放器时，会生成 EVENT_AVAILABLE_PLAYERS_CHANGED 通知和 EVENT_ADDRESSED_PLAYER_CHANGED 通知。UI 需要查看所列播放器的功能位掩码，以确定当前是不是支持浏览功能。

所有运行 iOS 6.0 或更高版本的设备都支持 AVRCP 浏览功能。

48.11.5.7 iOS 应用提供的元数据 [英语]

在设备上运行的音频应用可能会使用 iOS Media Player Framework 来向使用 AVRCP 的配件提供有关当前音频流的元数据。这些信息的要求和用法可以在 Apple Media Player Framework 文件的 `MPNowPlayingInfoCenter` 类别中找到。

48.11.6 高级音频分发描述文件 (A2DP) [英语]

请参阅“高级音频分发描述文件 (Advanced Audio Distribution Profile) (A2DP)（第 184 页）”。

2023/10/10 | 版权所有 © 2023 Apple Inc. 保留所有权利。

48.12 音频路由 [英语]

配件可以区分设备提供的各种音频内容，并确定播放行为。

配件可以使用以下两种蓝牙描述文件之一，从设备接收音频数据：

- HFP（使用 eSCO 频道）。
- A2DP（使用 ACL 频道）。

设备将根据使用的音频内容来确定使用哪个频道。为双向通信（例如电话或 FaceTime 通话）创建的音频路径会始终使用 HFP (eSCO) 路由来发送音频数据。音乐和类似内容使用 A2DP 频道路由。如果没有定义的路由，则默认使用设备进行音频播放。

48.12.1 使用 HFP 描述文件接收音频数据 [英语]

使用 HFP (eSCO) 路由发送的大部分音频内容都需要双向通信。使用 HFP (eSCO) 的情景包括但不限于蜂窝移动网络通话、FaceTime 通话和语音邮件。

配件扬声器和麦克风应当专用于 HFP (eSCO) 路由，而不得与任何其他音频源混用。

48.12.2 使用 A2DP 描述文件接收音频数据 [英语]

使用 A2DP 描述文件传输的音频内容大致可以分为两类：

- 来自音乐、视频、游戏或类似应用程序的音频内容。
- 系统生成的提醒和通知提示音。

48.12.2.1 区分音频内容和系统提示音 [英语]

通过添加对“音频/视频远程控制描述文件 (Audio/Video Remote Control Profile) (AVRCP)”版本 1.3 或更高版本的支持，可以将音乐等内容与系统提示音区分开来。AVRCP 描述文件使配件能够使用通知来了解音频播放设备的状态。请参阅“音频/视频远程控制描述文件 (Audio/Video Remote Control Profile) (AVRCP)（第 197 页）”。

当设备通过 A2DP 频道发起音频播放以播放音乐内容时，会发送 AVRCP 通知 EVENT_PLAYBACK_STATUS_CHANGED，以指示播放状态已更改为播放。请参阅“音频/视频远程控制描述文件规范 (*Audio/Video Remote Control Profile Specification*)”1.4 版的第 6.7.2 节。这表示使用 A2DP 描述文件传输的音频数据包含音乐。当设备通过 A2DP 频道发起音频播放以播放系统提示音时，不会发送 AVRCP 通知。

图 48-1（第 200 页） 和图 48-2（第 200 页） 展示了音乐播放通知和系统提示音通知之间的区别。

图 48-1　发起音频播放（例如音乐）

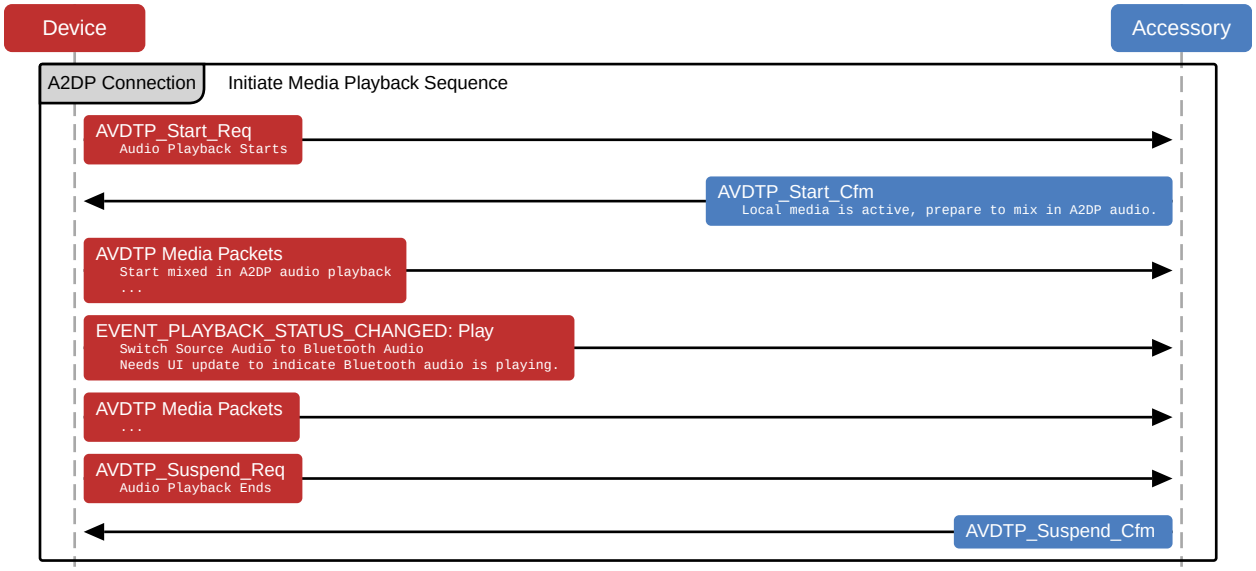

图 48-2　发起系统提示音（例如，导航指示）

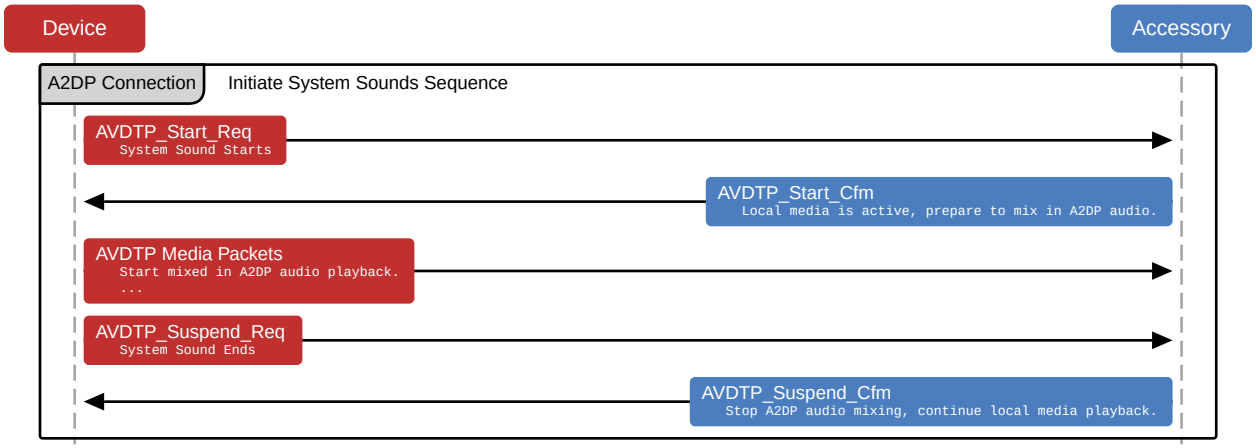

48.12.2.2 A2DP 的预期音频路由行为　[英语]

配件应当根据 A2DP 频道上的音频内容调整自身的音频路由行为。

如果音频数据包含音乐，则扬声器配件应该仅用于输出使用蓝牙链路的音频数据，而任何其他音频播放都会暂停。如果音频数据包含系统提示音，则配件应该能够根据需要渲染音频。如果配件正在播放来自不同来源的音频，则无需暂停设备上现有的音频播放，系统声音数据可以与现有音轨混合播放。

48.13 HID [英语]

通过蓝牙实施 HID 时，配件：

- 应当支持蓝牙 HID 描述文件 1.1。
- 应当支持低功耗监听模式（第 191 页）。
- 应当在 SDP 中使用以下参数进行低耗电监听：
  - HIDSSRHostMaxLatency - 450 ms（720 个时隙）
  - HIDSSRHostMinTimeout - 45 ms（72 个时隙）
- 应当使用 22 个字节或更少的典型报告数据包。这样的数据包足够小，能够放入带有 L2CAP 和 HID 报头的 DH1 数据包。

2023/10/10 | 版权所有 © 2023 Apple Inc. 保留所有权利。

49. 低功耗蓝牙 (BLE)

[英语]

“蓝牙 4.0 (*Bluetooth 4.0*)”规范引入了低功耗蓝牙 (BLE)。这项无线技术针对电池资源有限的配件。如果配件支持低功耗蓝牙，则应当遵循本节中的准则。

49.1 角色

[英语]

配件应当实现“蓝牙 4.0 (*Bluetooth 4.0*)”规范第 3 卷 C 部分的第 2.2.2.3 节中定义的外围设备 (Peripheral) 角色，或是第 2.2.2.1 节中定义的广播者 (Broadcaster) 角色。

49.2 广播频道

[英语]

配件应当在每个广播事件中通过所有三个广播频道（37、38 和 39）进行广播。请参阅“蓝牙 4.0 (*Bluetooth 4.0*)”规范第 6 卷 B 部分的第 4.4.2.1 节。

49.3 广播 PDU

[英语]

配件应当使用以下任一广播 PDU：

- ADV_IND
- ADV_NOCONN_IND
- ADV_SCAN_IND

不应使用 ADV_DIRECT_IND。请参阅“蓝牙 4.0 (*Bluetooth 4.0*)”规范第 6 卷 B 部分的第 2.3.1 节。

49.4 广播数据

[英语]

如“蓝牙核心规范补充 (*Bluetooth Core Specification Supplement*)”的 A 部分所述，配件发送的广播数据应当至少包含以下信息：

- 标记
- 发射功率
- 本地名称
- 服务

2023/10/10 | 版权所有 © 2023 Apple Inc. 保留所有权利。

本地名称应当与配件的标记和包装相匹配，且不包含冒号":"或分号";"。

例如，如果配件需要降低功耗，或者不是所有广播数据都能放入广播 PDU，则可以将本地名称和发射功率数据放入 SCAN_RSP PDU 中。根据所在状态，设备可能不会总是执行主动扫描。

主要服务应当始终在广播 PDU 中进行广播。次要服务不应被广播。如果广播 PDU 中的空间有限，则可能会忽略对配件的主要用例不太重要的服务。

SCAN_RSP PDU 中的广播数据和扫描响应数据应当符合"蓝牙 4.0 (*Bluetooth 4.0*)"规范第 3 卷 C 部分第 18 节中的格式设置准则：以长度域开始，后跟 AD 类型和 AD 数据。

49.5 广播间隔 [英语]

配件首先应当使用 20 ms 的推荐广播间隔并持续至少 30 秒。

如果配件在最初的 30 秒内没有被发现，Apple 建议使用以下任一更长的间隔时间，以增加被设备发现的机会：

- 152.5 ms
- 211.25 ms
- 318.75 ms
- 417.5 ms
- 546.25 ms
- 760 ms
- 852.5 ms
- 1022.5 ms
- 1285 ms

> **注：**
> 较长的广播间隔通常会造成发现和连接时间较长，但可能会降低配件的功耗。

49.6 连接参数 [英语]

如果中央和外围设备都支持连接参数请求规程，则其中之一应使用该规程。设备不会读取或使用外围设备首选连接参数特性中的参数。有关详细信息，请参阅"蓝牙 5.3 规范 (*Bluetooth 5.3 Specification*)"第 6 卷 B 部分的第 5.1.1 节。

如果连接参数请求不符合本节中的准则，则可能会被拒绝。

一般连接参数请求准则：

- 外设延时的连接间隔不超过 30。

2023/10/10 | 版权所有 © 2023 Apple Inc. 保留所有权利。

- 监控超时的时间范围为 6 秒至18 秒。
- 最小间隔不小于 15 ms。
- 间隔最小值是 15 ms 的倍数。
- 以下任一规则：
  - 间隔最大值比间隔最小值至少大 15 ms。
  - 间隔最大值和间隔最小值均设为 15 ms。
- 间隔最大值*（外设延时 + 1）为 6 秒或更少。
- 监控超时大于间隔最大值*（外设延时 + 1）* 3。

如果低功耗蓝牙 HID 是配件已连接的服务之一，则一些设备可以接受低至 11.25 ms 的连接间隔。

> **注：**
> 当间隔最大值和间隔最小值均设为 15 ms 时，一些设备（如 Apple Watch）将提供 30 ms 间隔，以更好地平衡功率和性能限制。

Apple Watch 连接参数请求准则：

- 最小间隔不小于 30 ms。
- 间隔最小值是 30 ms 的倍数。
- 以下任一规则：
  - 间隔最大值比间隔最小值至少大 30 ms。
  - 间隔最大值和间隔最小值均设为 30 ms。

49.7 数据包长度扩展 [英语]

数据包长度扩展可将最大数据长度从 27 增加到 251。使用较大的数据包长度可以提高无线电效率，极大地提高应用程序数据速率并延长电池寿命。有关详细信息，请参阅“蓝牙 5.0 (*Bluetooth 5.0*)”规范第 6 卷 B 部分的第 4.6.6 节。

图 49-1 数据包长度扩展

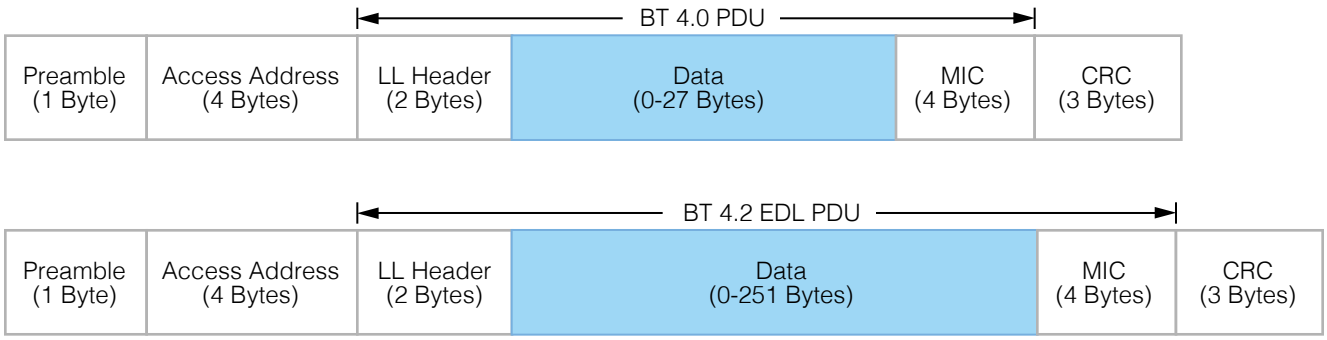

配件应当支持数据包长度扩展，以便在与设备配合使用时实现最佳性能。

作为中控运行的 iOS 设备和 Mac 电脑将根据各类因素（如连接事件长度、系统拓扑和协议）协商最佳数据包长度。

49.8 隐私 [英语]

配件应当能够在所有情况下解析可解析私有地址。由于隐私问题，设备将使用“蓝牙 4.0 (*Bluetooth 4.0*)”规范第 3 卷 C 部分第 10.8 节所定义的随机设备地址。

49.9 权限 [英语]

配件不应针对发现服务和特征要求特殊权限，例如配对、认证或加密。仅在访问特征值或描述值时，才可能需要特殊权限。请参阅“蓝牙 4.0 (*Bluetooth 4.0*)”规范第 3 卷 G 部分第 8.1 节的第五段。

49.10 配对 [英语]

在 ATT 请求被拒绝并显示“Insufficient Authentication”（身份验证不足）错误代码之前，配件不应请求配对。有关详细信息，请参阅“蓝牙 4.0 (*Bluetooth 4.0*)”规范第 3 卷 F 部分的第 4 节。

如果出于安全原因，配件需要与中央设备之间存在绑定关系，则外围设备应当在适当的情况下使用“Insufficient Authentication”（身份验证不足）错误代码来拒绝 ATT 请求。因此，设备可能会进行必要的安全规程。

同样，如果设备充当中央设备和 GATT 服务器，那么它可能会使用“Insufficient Authentication”（身份验证不足）错误代码拒绝 ATT 请求。配件应当启动配对安全规程作为回应。

根据所用的设备，配对可能需要用户授权。在配件与设备配对后，配件应该保留中央和外围设备的分布式密钥，以供将来使用。如果不再需要配对，配件应该删除这两组密钥。

49.11 MTU 大小 [英语]

在执行 Exchange MTU Request 握手之前，支持数据包长度扩展的配件应该执行数据包长度更新规程，详见“数据包长度扩展（第 204 页）”。

在 Exchange MTU Request 握手期间，设备将支持并请求大于默认值的 MTU 大小。请参阅“蓝牙 4.0 (*Bluetooth 4.0*)”规范第 3 卷 F 部分的第 3.2.8 节。

2023/10/10 | 版权所有 © 2023 Apple Inc. 保留所有权利。

作为 ATT 客户端运行时，设备将根据蓝牙拓扑结构、连接事件长度、最大数据长度和协议（GATT 或面向连接的 L2CAP）等因素来请求最佳的 MTU 大小。

作为 ATT 服务器运行的配件应当选择等于或大于设备的 MTU 请求的 MTU。

49.12 服务 [英语]

49.12.1 通用访问描述文件服务 [英语]

配件应当根据“蓝牙 4.0 (*Bluetooth 4.0*)”规范第 3 卷 C 部分的第 12.1 节所述来实现“设备名称”特征。“设备名称”特征应该是可写的。

49.12.2 通用属性描述文件服务 [英语]

只有配件能够在生命周期内更改服务时，才应该实施“服务已更改”特征。

设备可能会使用“服务已更改”特征来确定它是不是可以依赖之前从设备读取（缓存）的信息。请参阅“蓝牙 4.0 (*Bluetooth 4.0*)”规范第 3 卷 G 部分的第 7.1 节。

49.12.3 设备信息服务 [英语]

配件应该实施设备信息服务。这项服务的服务 UUID 不应在广播数据中广播。应当支持以下特征：

- 制造商名称字符串（最多 26 个字符）。
- 型号字符串（最多 26 个字符）。
- 固件版本字符串
- 软件版本字符串

49.12.4 可用服务 [英语]

利用 iOS 7.0，任何设备都可以为配件提供电池服务、当前时间服务和 Apple 通知中心服务 (ANCS)。当前时间服务支持当前时间和本地时间信息特征。在当前时间变化时，这项服务不提供“调整原因”。ANCS 使用 `7905F431-B5CE-4E99-A40F-4B1E122D00D0` 作为 UUID。

这些服务无法保证在连接后立即可用，并且配件应该支持在服务变为可用时通知“服务已更改”特征的特征值指示（请参阅“蓝牙 4.0 (Bluetooth 4.0)”规范第 3 卷 G 部分的第 7.1 节）。只要设备已配对并使用任一可用服务，它就会保持与配件的连接。

2023/10/10 | 版权所有 © 2023 Apple Inc. 保留所有权利。

49.13 GATT 服务器 [英语]

在 iOS 6.0 中，应用程序可能会向 GATT 服务器（由设备向配件提供）提供服务和特征。本节中的建议适用于这种情况下的配件。

以下服务由 iOS 内部实施，不应由第三方 iOS 应用程序发布：

- 通用属性描述文件服务
- 通用访问描述文件服务
- 低功耗蓝牙 HID 服务
- 电池服务
- 当前时间服务
- Apple 通知中心服务

设备实施了“GAP 服务已更改”特征，因为数据库内容可能随时更改。因此，配件应当支持这个特征的特征值指示，并在收到指示后相应地使自身的数据库缓存失效。请参阅“蓝牙 4.0 (*Bluetooth 4.0*)”规范第 3 卷 G 部分的第 7.1 节。

配件应当尽量减少使用 ATT/GATT 请求和命令，并只发送必要的内容。例如，当配件正在寻找特定服务时，请勿使用“GATT 发现所有服务”。这时，请改为使用“通过服务 UUID 发现主要服务”。广播时间越短，意味着配件和设备的功耗越低且性能越高。

当第三方 iOS 应用程序发现配件上的服务时，iOS 内部将使用以下服务，并从已发现服务列表中进行筛选：

- 通用属性描述文件服务
- 通用访问描述文件服务
- 低功耗蓝牙 HID 服务
- Apple 通知中心服务

配件应当足够稳健，能够妥善处理任何错误。如果拥有服务的应用程序不在前台并且无权在后台运行，则配对和特征值读取/写入操作可能会失败。

如果使用 ATT 准备写入请求，则队列中的所有属性都将包含在同一个 GATT 服务中。

2023/10/10 | 版权所有 © 2023 Apple Inc. 保留所有权利。

模块

50. Apple USB-C 模拟耳机模块

[英语]

注：
开发者预览

以下章节为预览，不应在配件开发中使用。虽然这些内容已审核过准确性，但不是最终内容。Apple 之所以提供这些内容，是为了帮助配件开发者规划好采用本文所述的配件接口功能。此信息可能会有变动。

Apple USB-C 模拟耳机模块 (C125) 可用于打造支持 Apple Music 无损和高解析无损播放的耳机（第 74 页）。

图 50-1 USB-C 模拟耳机模块 (C125)

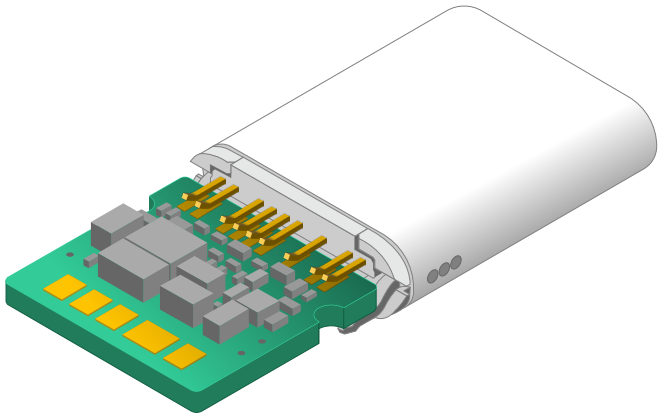

50.1 概述

[英语]

C125 是一款符合 USB 音频设备类 2.0 的编解码器，其集成了一个 USB-C 插头。

C125 支持：

- 16-bit 和 24-bit 采样。
- 44.1 kHz 和 48 kHz 单声道麦克风输入。
- 44.1 kHz、48 kHz 和 96 kHz（以及可选的 192 kHz 和 384 kHz）立体声耳机电平输出。

2023/10/10 | 版权所有 © 2023 Apple Inc. 保留所有权利。

- 调高音量、调低音量和中心按钮。

C125 不应用于 USB-C 转 3.5 mm 耳机插孔转换器。

50.1.1 其他规范和支持 [英语]

如需适用于 C125 的更多软件和支持，请访问 Cirrus Logic, Inc. 网站 https://www.cirrus.com/support/。

50.2 机械 [英语]

C125 具有以下机械特征：

- 集成式 USB-C 接口。
- 未封装。
- 工作温度范围为 -20 °C 至 65 °C。

如需尺寸图，请参见“C125 尺寸（第 212 页）”。

除非本章另有规定，否则配件应满足 USB-C 接口集成要求，详见“机械（第 221 页）”。

C125 耳机应该：

- 封装 C125 的两侧。
- 使用 SUS 屏蔽罩保护 C125 电子元件。
- 将 SUS 屏蔽罩激光焊接至 C125 接地环上。

50.3 板分配 [英语]

图 50-2（第 211 页） 和表 50-1（第 211 页） 详细说明了 C125 板的布局、名称、描述和分配。

图 50-2　C125 板

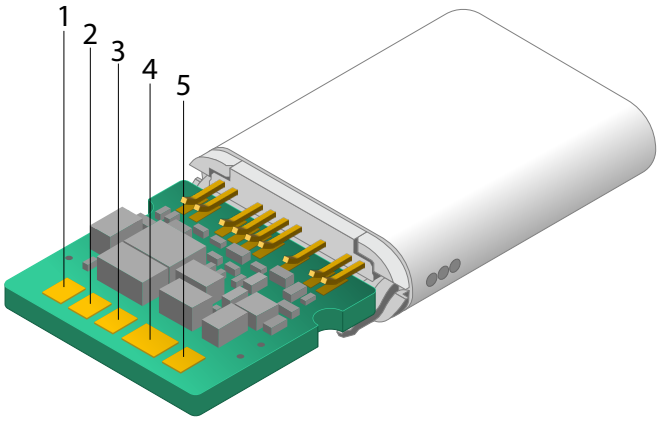

表格 50-1　C125 板分配

板	名称	分配
1	左声道驱动单元	左声道驱动单元
2	麦克风偏置	麦克风偏置
3	反向	NC
4	接地	右声道回路、左声道回路、麦克风回路
5	右声道驱动单元	右声道驱动单元

50.4 电气

[英语]

C125 耳机应整合有 Apple 耳机遥控器和麦克风发射器（第 214 页）。

C125 屏蔽可以作为电气接地来对待。

2023/10/10 | 版权所有 © 2023 Apple Inc. 保留所有权利。

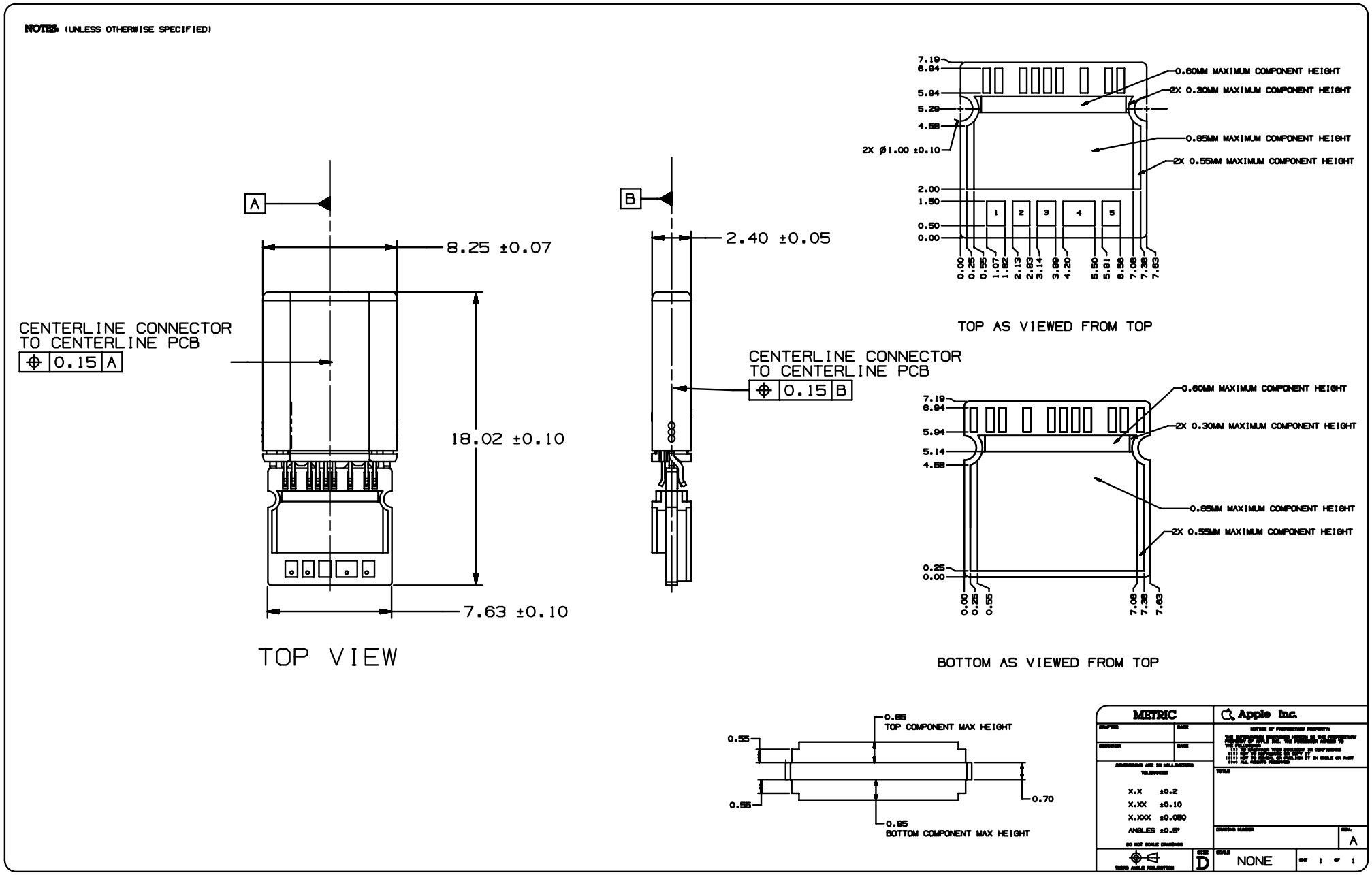
NOTES: (UNLESS OTHERWISE SPECIFIED)
A
8.25 ±0.07
18.02 ±0.10
7.63 ±0.10
CENTERLINE CONNECTOR
TO CENTERLINE PCB
0.15 A
TOP VIEW
B
2.40 ±0.05
CENTERLINE CONNECTOR
TO CENTERLINE PCB
0.15 B
7.19
6.94
5.94
5.29
4.58
2X Ø1.00 ±0.10
2.00
1.50
0.50
0.00
0.60MM MAXIMUM COMPONENT HEIGHT
2X 0.30MM MAXIMUM COMPONENT HEIGHT
0.85MM MAXIMUM COMPONENT HEIGHT
2X 0.55MM MAXIMUM COMPONENT HEIGHT
1
2
3
4
5
0.00
0.25
0.55
1.07
1.82
2.13
2.63
3.14
3.69
4.20
5.50
5.81
6.58
7.08
7.38
7.63
TOP AS VIEWED FROM TOP
7.19
6.94
5.94
5.14
4.58
0.25
0.00
0.60MM MAXIMUM COMPONENT HEIGHT
2X 0.30MM MAXIMUM COMPONENT HEIGHT
0.85MM MAXIMUM COMPONENT HEIGHT
2X 0.55MM MAXIMUM COMPONENT HEIGHT
0.00
0.25
0.55
7.08
7.38
7.63
BOTTOM AS VIEWED FROM TOP
0.55
0.85
TOP COMPONENT MAX HEIGHT
0.55
0.70
0.85
BOTTOM COMPONENT MAX HEIGHT
METRIC
Apple Inc.
X.X ±0.2
X.XX ±0.10
X.XXX ±0.050
ANGLES ±0.5°
D
NONE
A

元件

51. Apple 耳机遥控器和麦克风发射器 [英语]

注：
开发者预览

以下章节为预览，不应在配件开发中使用。虽然这些内容已审核过准确性，但不是最终内容。Apple 之所以提供这些内容，是为了帮助配件开发者规划好采用本文所述的配件接口功能。此信息可能会有变动。

如果耳机（第 74 页）使用 Apple USB-C 模拟耳机模块（第 209 页）整合了 Apple 耳机遥控器和麦克风发射器，则设备可以接收来自该耳机的按钮操作信息。

51.1 要求 [英语]

实施了耳机遥控器和麦克风发射器的配件应符合以下要求：

- 当用户佩戴耳机时，其遥控麦克风应位于距离耳机驱动单元中心 120-160 mm 的位置。
- 将设备连接到耳机的插头上应引出六根导线，分别与以下信号对应：
  - 右声道驱动单元
  - 右声道回路
  - 左声道驱动单元
  - 左声道回路
  - 麦克风偏置
  - 麦克风回路
- 所有信号应当分别传输至对应的元件。
- 应具有三个物理遥控按钮，分别用于调高音量、调低音量和中心按钮功能。

集成耳机遥控器和麦克风发射器的耳机应集成 MEMS 模拟麦克风。

耳机驱动单元应该：

- 最小负载阻抗为 16 Ω。
- 最大负载电容为 150 pF。

耳机应实施以下配置之一。麦克风和遥控按钮可以位于耳机的左侧或右侧。

图 **51-1** USB-C 模拟耳机模块 (C125) 示例 A

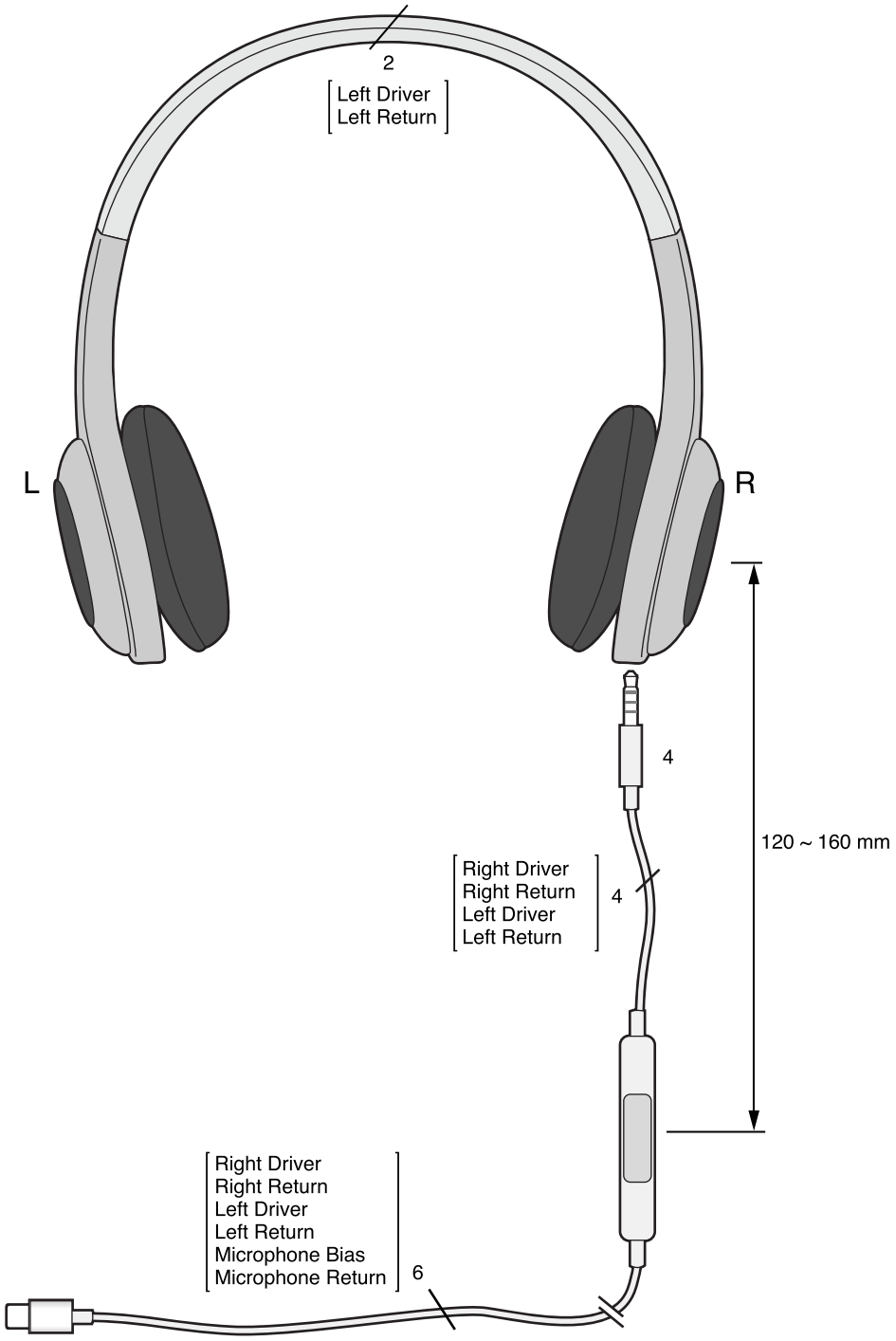

图 **51-2** USB-C 模拟耳机模块 (C125) 示例 B

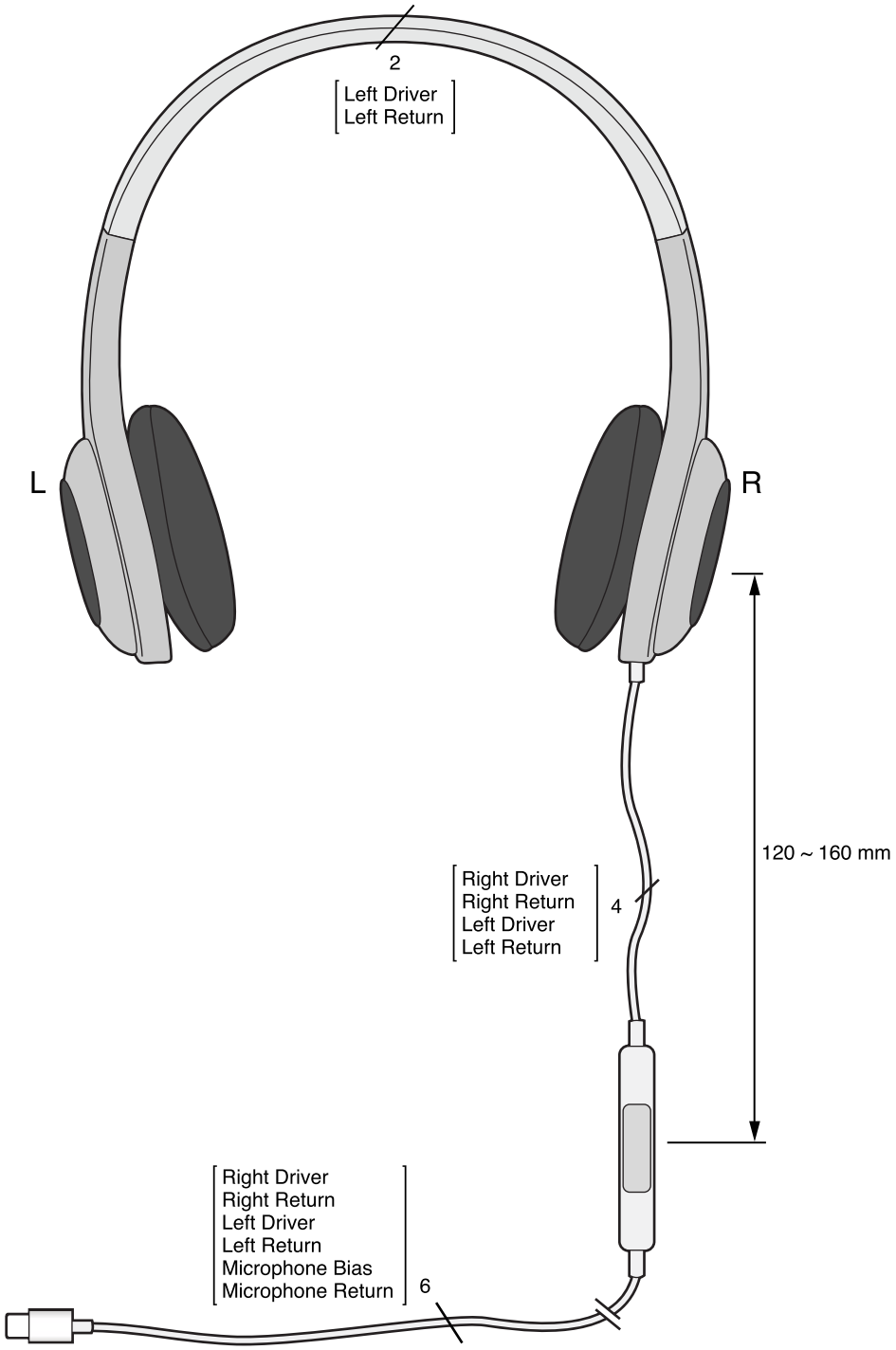

图 **51-3** USB-C 模拟耳机模块 (C125) 示例 C

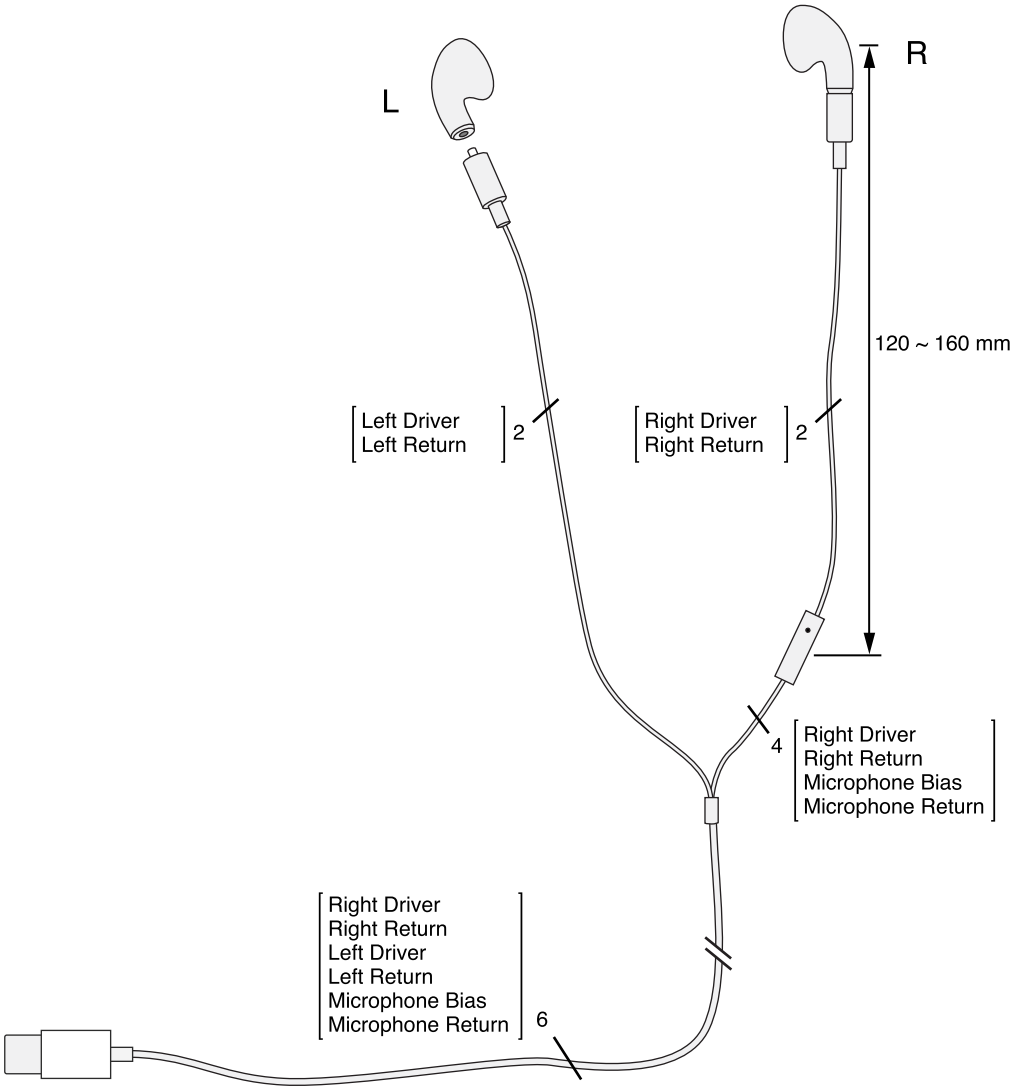

图 51-4 USB-C 模拟耳机模块 (C125) 示例 D

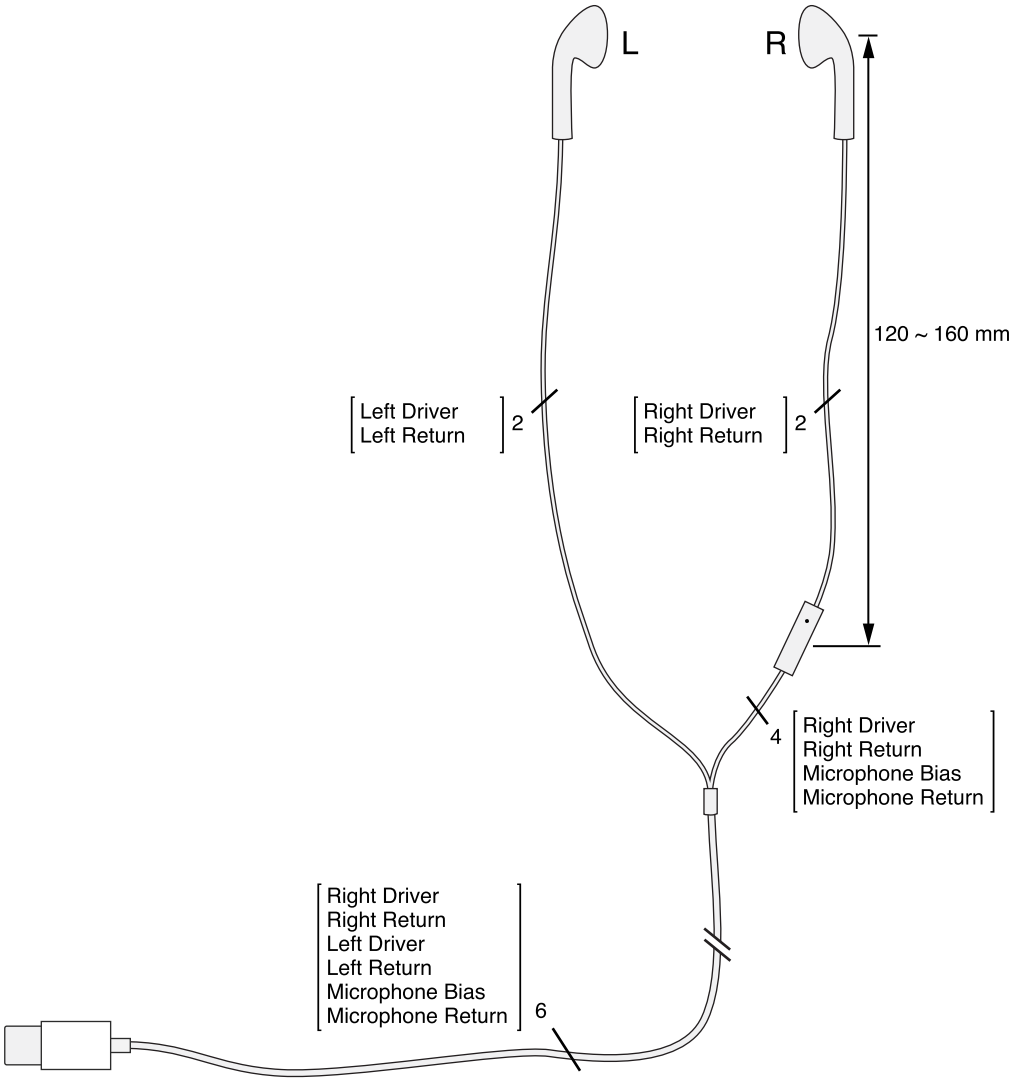

接口

52. USB-A 插口 [英语]

配件可以包含 USB-A 插口，用于：

- 为设备供电。

52.1 机械 [英语]

USB-A 插口应该达到或超出所有适用 USB-IF 机械规范的要求。

52.2 电气 [英语]

USB-A 插口应该达到或超出所有适用 USB-IF 电气规范的要求。

2023/10/10 | 版权所有 © 2023 Apple Inc. 保留所有权利。

53. USB-C 插头

[英语]

包含 USB-C 插头的配件应符合“USB Type-C 连接线和接口规范 2.2 版 (*USB Type-C Cable and Connector Specification Release 2.2*)”中的规定。

配件可以包含 USB-C 插头，用于：

- 为设备供电。
- 从 USB Type-C 电流源获得电能。
- 从 USB 供电源获得电能。
- 从 USB 专用充电端口和 USB 主机获得电能。

受益于集成 USB-C 插头的配件包括连接线、耳机、外接电池和转换器。

53.1 机械

[英语]

USB-C 插头应该具有 USB-IF 指定的*接口*测试 ID，详见 https://www.usb.org/products。

包含 USB-C 插头的配件应符合“USB Type-C 连接线和接口规范 2.2 版 (*USB Type-C Cable and Connector Specification Release 2.2*)”中规定的 USB-C 插头接口尺寸要求。

USB-C 插头外壳不应超过图 53-1（第 222 页） 中所示的以下尺寸：

- A ≤ 12.35 mm
- B ≤ 6.5 mm

图 53-1　USB-C 插头示例

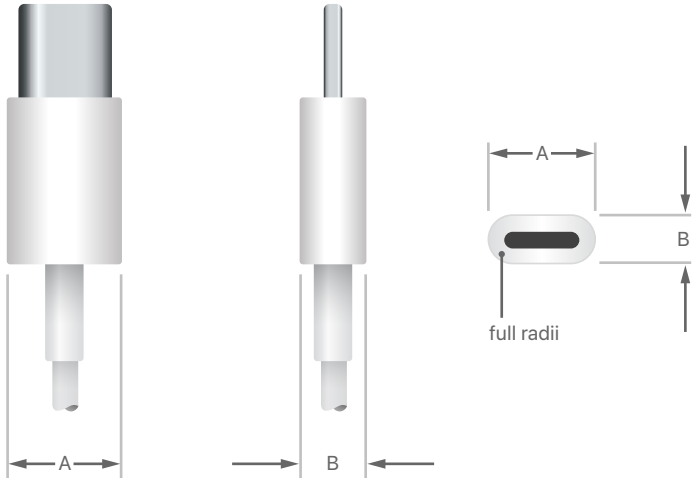

USB-C 插头外壳应带有全半径圆角，以实现与最广泛保护壳的最大兼容性，详见“USB-C 插口配件避开区域（第 226 页）”。

53.2 电气 [英语]

53.2.1 获得电能 [英语]

通过 USB-C 插头获得电能的配件应该：

- 正确识别所有 USB Type-C 电流（第 183 页）源。
- 正确识别所有 USB 专用充电端口 (DCP)，定义见“USB 电池充电规范 1.2 版 (*USB Battery Charging Specification, Release 1.2*)”。
- 在连接到 USB 主机时枚举为 USB 设备，并且：
  - 在成功枚举之前，消耗的电流不超过 100 mA。
  - 在 USB 设备描述符中请求的充电电流不超过 500 mA。
- 消耗的功率不超过 USB 电源声称可以使用上述方法之一提供的功率。

配件也可正确识别所有 USB 供电（第 182 页）源。

从设备中获得电能的配件可以通过以下协议之一来实现上述功能：

- USB Type-C 电流（第 183 页）
- USB 供电（第 182 页）

53.2.2 供电 [英语]

使用 USB-C 插头为设备供电的配件：

- 应该提供至少 15 W（3 A，5.0 V）功率。
- 应该支持 USB Type-C 电流（第 183 页）。
- 应该支持 USB 供电（第 182 页）。
- 应在插口上贴上标签，以瓦特为单位指明提供的功率。

53.3 测试规程 [英语]

本节中概述了 USB-C 插头测试规程。

53.3.1 机械 [英语]

验证 USB-C 插头的尺寸是否与接口尺寸相符。

53.3.2 接口测试 ID [英语]

验证配件的 USB-C 插头有没有 USB-IF 指定的*接口*测试 ID，详见 https://www.usb.org/products。

53.3.3 获得电能 [英语]

这一规程适用于使用 USB-C 插头获得电能的配件。

需要以下器材：

- Apple 140W USB-C 电源适配器
- Apple 96W USB-C 电源适配器
- Apple 70W USB-C 电源适配器
- Apple 67W USB-C 电源适配器
- Apple 30W USB-C 电源适配器
- Apple 20W USB-C 电源适配器
- Apple 35W 双 USB-C 端口小型电源适配器
- Apple 35W 双 USB-C 端口电源适配器
- 附带的 USB-C 电源适配器（如果适用）

以下测试案例适用于电源识别：

1. 验证配件是不是能够正确识别所有 Apple 品牌或附带的电源：
   a. 验证每个 USB-C 电源适配器是不是都能被正确识别并且能够供电。
2. 验证配件是不是能够正确识别 Mac 和 iPad：
   a. 验证 Mac 是不是能被正确识别并且能够供电。
   b. 验证 iPad 是不是能被正确识别并且能够供电。

2023/10/10 | 版权所有 © 2023 Apple Inc. 保留所有权利。

54. USB-C 插口

[英语]

包含 USB-C 插口的配件应该符合“USB Type-C 连接线和接口规范 2.2 版 (*USB Type-C Cable and Connector Specification Release 2.2*)”中的规定。

配件可以包含 USB-C 插口，用于：

- 为设备供电。
- 从 Apple 品牌的电源获得电能。
- 从 USB Type-C 电流源获得电能。
- 从 USB 供电源获得电能。
- 从 USB 专用充电端口和 USB 主机获得电能。

受益于整合 USB-C 插口的配件包括交流电源适配器（第 71 页）、外接电池（第 73 页）和扬声器。

54.1 机械

[英语]

USB-C 插口应该经过 USB-IF 认证，并拥有 USB-IF 提供的*接口*测试 ID，详见 https://www.usb.org/products。

包含 USB-C 插口的配件应符合“USB Type-C 连接线和接口规范 2.2 版 (*USB Type-C Cable and Connector Specification Release 2.2*)”中规定的 USB-C 插口接口尺寸要求。

请参见建议的最小 USB-C 插口配件避开区域（第 226 页）。

54.2 电气

[英语]

54.2.1 获得电能

[英语]

通过 USB-C 插口获得电能的配件应该：

- 正确识别所有的 Apple 品牌电源。
- 正确识别所有 USB Type-C 电流（第 183 页）源。
- 在连接到 USB 主机时枚举为 USB 设备，并且：
  - 在成功枚举之前，消耗的电流不超过 100 mA。
  - 在 USB 设备描述符中请求的充电电流不超过 500 mA。

2023/10/10 | 版权所有 © 2023 Apple Inc. 保留所有权利。

- 正确识别所有 USB 专用充电端口 (DCP)，定义见“USB 电池充电规范 1.2 版 (*USB Battery Charging Specification, Release 1.2*)”。
- 消耗的功率不超过 USB 电源声称可以使用上述方法之一提供的功率。

配件也可正确识别所有 USB 供电（第 182 页）源。

54.2.2 供电 [英语]

使用 USB-C 插口为设备供电的配件：

- 应该提供至少 15 W（3 A，5.0 V）功率。
- 应该支持 USB Type-C 电流（第 183 页）。
- 应该支持 USB 供电（第 182 页）。
- 应在插口上贴上标签，以瓦特为单位指明提供的功率。

2023/10/10 | 版权所有 © 2023 Apple Inc. 保留所有权利。

54.3 USB-C 插口配件避开区域

[英语]

NOTES: (UNLESS OTHERWISE SPECIFIED)

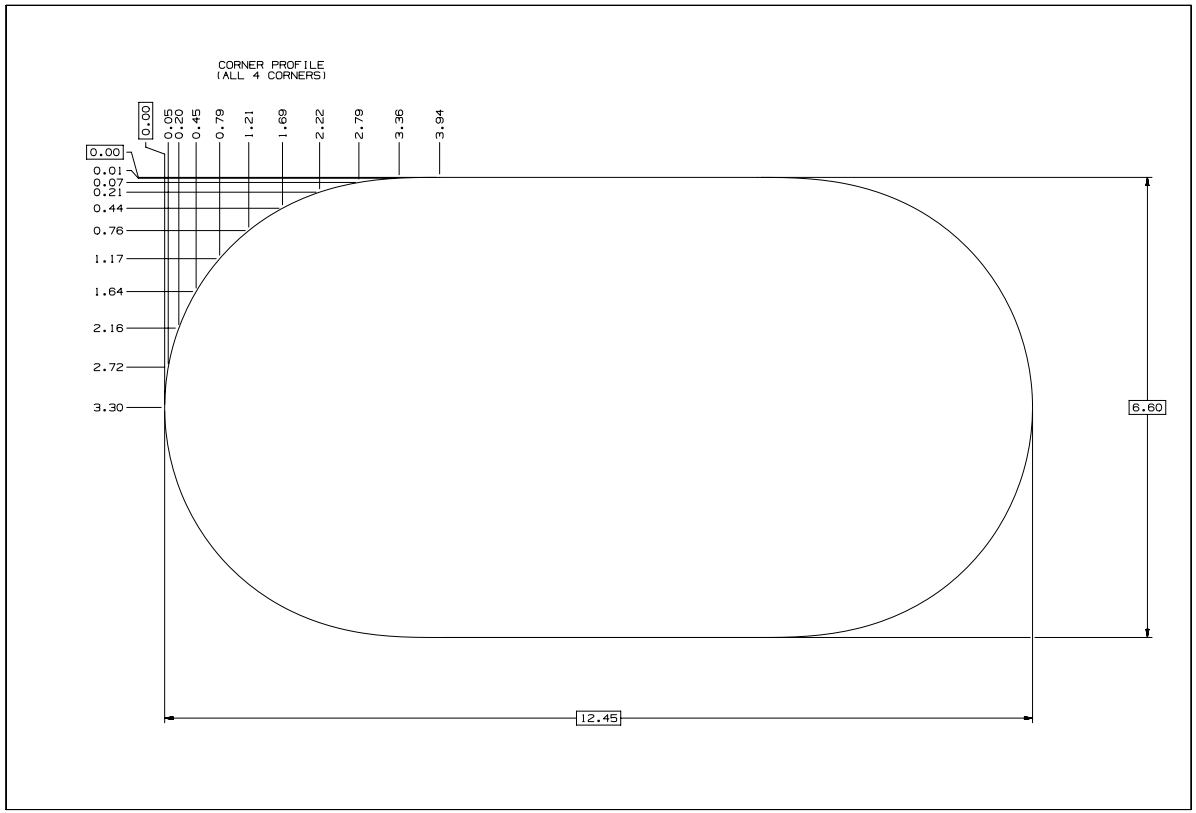

METRIC

Apple Inc.

DRAWTER DATE

DESIGNER DATE

DIMENSIONS ARE IN MILLIMETERS
TOLERANCES

DO NOT SCALE DRAWINGS

THIRD ANGLE PROJECTION

SIZE D

SCALE 30:1

SHT 1 OF 1

NOTICE OF PROPRIETARY PROPERTY:
THE INFORMATION CONTAINED HEREIN IS THE PROPRIETARY PROPERTY OF APPLE INC. THE POSSESSOR AGREES TO THE FOLLOWING:
(i) TO MAINTAIN THIS DOCUMENT IN CONFIDENCE
(ii) NOT TO REPRODUCE OR COPY IT
(iii) NOT TO REVEAL OR PUBLISH IT IN WHOLE OR PART
(iv) ALL RIGHTS RESERVED

TITLE

PROFILE,USB-C

DRAWING NUMBER REV.

NX GENERATED

54.4 测试规程 [英语]

本节中概述了 USB-C 插口测试规程。

54.4.1 接口测试 ID [英语]

验证配件的 USB-C 插口有没有 USB-IF 指定的*接口*测试 ID，详见 https://www.usb.org/products。

54.4.2 获得电能 [英语]

这一规程适用于使用 USB-C 插口获得电能的配件。

54.4.2.1 器材 [英语]

需要以下器材：

- Apple USB-C 充电线（1 米）
- Apple USB-C 充电线（2 米）
- 附带的 USB-C 接 USB-C 连接线（如果适用）
- 附带的 USB-A 转 USB-C 连接线（如果适用）
- 第三方 USB-A 转 USB-C 连接线
- Apple 140W USB-C 电源适配器
- Apple 96W USB-C 电源适配器
- Apple 70W USB-C 电源适配器
- Apple 67W USB-C 电源适配器
- Apple 30W USB-C 电源适配器
- Apple 20W USB-C 电源适配器
- Apple 35W 双 USB-C 端口小型电源适配器
- Apple 35W 双 USB-C 端口电源适配器
- Apple 12W USB 电源适配器
- Apple 5W USB 电源适配器
- 附带的 USB-C 电源适配器（如果适用）
- 附带的 USB-A 电源适配器（如果适用）

54.4.2.2 测试案例 [英语]

以下测试案例适用于电源识别：

1. 验证配件是不是能够正确识别所有 Apple 品牌或附带的电源适配器：
   a. 使用每根 USB-A 转 USB-C 连接线，验证每个 USB-A 电源适配器是不是都能被正确识别并且都能供电。
   b. 使用每根 USB-C 接 USB-C 连接线，验证每个 USB-C 电源适配器是不是都能被正确识别并且都能供电。

2023/10/10 | 版权所有 © 2023 Apple Inc. 保留所有权利。

2. 验证配件是不是能够正确识别 Mac 和 iPad：
   a. 使用每根 USB-A 转 USB-C 连接线和 USB-C 接 USB-C 连接线，验证 Mac 是不是都能被正确识别并且都能供电。
   b. 使用每根 USB-A 转 USB-C 连接线和 USB-C 至 USB-C 连接线，验证 iPad 是不是都能被正确识别并且都能供电。

54.4.3 供电 [英语]

这一规程适用于使用 USB-C 插口供电的配件。

54.4.3.1 器材 [英语]

需要以下器材：

- Apple USB-C 转闪电连接线（1 米）
- Apple USB-C 转闪电连接线（2 米）
- Apple USB-C 充电线（1 米）
- Apple USB-C 充电线（2 米）
- 附带的 USB-C 接 USB-C 连接线（如果适用）

54.4.3.2 测试案例 [英语]

以下测试案例适用于供电的设备：

1. 验证配件是不是能够正确地为设备供电：
   a. 使用每根 USB-C 转闪电连接线，验证配件是不是能够使用 USB Type-C 电流或 USB-PD 来识别至少 15 W 的供电能力。
   b. 使用每根 USB-C 转闪电连接线，验证配件是不是能够为设备供电。
2. 验证配件是不是能够正确识别 Mac 和 iPad：
   a. 使用每根 USB-C 接 USB-C 连接线，验证配件是不是能被正确识别并且能为 Mac 供电。
   b. 使用每根 USB-C 至 USB-C 连接线，验证配件是不是能被正确识别并且能为 iPad 供电。

2023/10/10 | 版权所有 © 2023 Apple Inc. 保留所有权利。

工具

55. Accessory Developer Assistant (ADA) [英语]

本规范中的一些测试规程需要使用 Accessory Developer Assistant App，该 App 可从 https://apps.apple.com/cn/app/accessory-developer-assistant/id1635862694 下载。

使用 Accessory Developer Assistant App 可以确保 iPhone 和 iPad 在以下功能方面的性能：

- 自动对焦和光学图像防抖（第 59 页）
- 指南针（第 60 页）

55.1 自动对焦和光学图像防抖测试描述文件 [英语]

自动对焦和光学图像防抖（第 59 页）测试规程需要安装一个额外的描述文件：

1. 在设备上访问 ADA 摄像头测试描述文件 (https://download.developer.apple.com/Developer_Tools/Accessory_Developer_Assistant_Camera_Test_Profile/ADACamera.mobileconfig)。
2. 将描述文件安装到设备上。
3. 前往“设置”>“已下载描述文件”，再完成安装。
4. 重新启动设备。

参考

56. 设备尺寸图

[英语]

本章包含以下尺寸图：

- iPhone 15 Pro Max 1/3（第 238 页）
- iPhone 15 Pro Max 2/3（第 239 页）
- iPhone 15 Pro Max 3/3（第 240 页）
- iPhone 15 Pro 1/3（第 241 页）
- iPhone 15 Pro 2/3（第 242 页）
- iPhone 15 Pro 3/3（第 243 页）
- iPhone 15 Plus 1/3（第 244 页）
- iPhone 15 Plus 2/3（第 245 页）
- iPhone 15 Plus 3/3（第 246 页）
- iPhone 15 1/3（第 247 页）
- iPhone 15 2/3（第 248 页）
- iPhone 15 3/3（第 249 页）
- iPhone 14 Pro Max 1/3（第 250 页）
- iPhone 14 Pro Max 2/3（第 251 页）
- iPhone 14 Pro Max 3/3（第 252 页）
- iPhone 14 Pro 1/3（第 253 页）
- iPhone 14 Pro 2/3（第 254 页）
- iPhone 14 Pro 3/3（第 255 页）
- iPhone 14 Plus 1/3（第 256 页）
- iPhone 14 Plus 2/3（第 257 页）
- iPhone 14 Plus 3/3（第 258 页）
- iPhone 14 1/3（第 259 页）
- iPhone 14 2/3（第 260 页）
- iPhone 14 3/3（第 261 页）
- iPhone SE（第 3 代）和 iPhone SE（第 2 代）（第 278 页）
- iPhone 13 Pro Max 1/2（第 262 页）
- iPhone 13 Pro Max 2/2（第 263 页）
- iPhone 13 Pro 1/2（第 264 页）
- iPhone 13 Pro 2/2（第 265 页）
- iPhone 13 1/2（第 266 页）
- iPhone 13 2/2（第 267 页）
- iPhone 13 mini 1/2（第 268 页）
- iPhone 13 mini 2/2（第 269 页）

2023/10/10 | 版权所有 © 2023 Apple Inc. 保留所有权利。

- iPhone 12 Pro Max 1/2（第 270 页）
- iPhone 12 Pro Max 2/2（第 271 页）
- iPhone 12 Pro 1/2（第 272 页）
- iPhone 12 Pro 2/2（第 273 页）
- iPhone 12 1/2（第 274 页）
- iPhone 12 2/2（第 275 页）
- iPhone 12 mini 1/2（第 276 页）
- iPhone 12 mini 2/2（第 277 页）
- iPhone 11 Pro Max（第 279 页）
- iPhone 11 Pro（第 280 页）
- iPhone 11（第 281 页）
- iPhone XS Max（第 282 页）
- iPhone XS（第 283 页）
- iPhone XR（第 284 页）
- iPhone X（第 285 页）
- iPhone 8 Plus（第 286 页）
- iPhone 8（第 287 页）
- iPhone 7 Plus（第 288 页）
- iPhone 7（第 289 页）
- iPhone 6s Plus（第 290 页）
- iPhone 6s（第 291 页）
- iPhone 6 Plus（第 292 页）
- iPhone 6（第 293 页）
- iPhone 5s 和 iPhone SE（第 294 页）
- iPhone 5c（第 295 页）
- iPhone 5（第 296 页）
- 12.9 英寸 iPad Pro（第 6 代）1/5（第 297 页）
- 12.9 英寸 iPad Pro（第 6 代）2/5（第 298 页）
- 12.9 英寸 iPad Pro（第 6 代）3/5（第 299 页）
- 12.9 英寸 iPad Pro（第 6 代）4/5（第 300 页）
- 12.9 英寸 iPad Pro（第 6 代）5/5（第 301 页）
- 11 英寸 iPad Pro（第 4 代）1/5（第 302 页）
- 11 英寸 iPad Pro（第 4 代）2/5（第 303 页）
- 11 英寸 iPad Pro（第 4 代）3/5（第 304 页）
- 11 英寸 iPad Pro（第 4 代）4/5（第 305 页）
- 11 英寸 iPad Pro（第 4 代）5/5（第 306 页）
- iPad（第 10 代）1/6（第 307 页）
- iPad（第 10 代）2/6（第 308 页）
- iPad（第 10 代）3/6（第 309 页）
- iPad（第 10 代）4/6（第 310 页）

2023/10/10 | 版权所有 © 2023 Apple Inc. 保留所有权利。

- iPad（第 10 代）5/6（第 311 页）
- iPad（第 10 代）6/6（第 312 页）
- iPad Air（第 5 代）和 iPad Air（第 4 代）1/5（第 313 页）
- iPad Air（第 5 代）和 iPad Air（第 4 代）2/5（第 314 页）
- iPad Air（第 5 代）和 iPad Air（第 4 代）3/5（第 315 页）
- iPad Air（第 5 代）和 iPad Air（第 4 代）4/5（第 316 页）
- iPad Air（第 5 代）和 iPad Air（第 4 代）5/5（第 317 页）
- iPad mini（第 6 代）1/6（第 318 页）
- iPad mini（第 6 代）2/6（第 319 页）
- iPad mini（第 6 代）3/6（第 320 页）
- iPad mini（第 6 代）4/6（第 321 页）
- iPad mini（第 6 代）5/6（第 322 页）
- iPad mini（第 6 代）6/6（第 323 页）
- iPad（第 9 代）、iPad（第 8 代）和 iPad（第 7 代）1/4（第 324 页）
- iPad（第 9 代）、iPad（第 8 代）和 iPad（第 7 代）2/4（第 325 页）
- iPad（第 9 代）、iPad（第 8 代）和 iPad（第 7 代）3/4（第 326 页）
- iPad（第 9 代）、iPad（第 8 代）和 iPad（第 7 代）4/4（第 327 页）
- 12.9 英寸 iPad Pro（第 5 代）1/5（第 328 页）
- 12.9 英寸 iPad Pro（第 5 代）2/5（第 329 页）
- 12.9 英寸 iPad Pro（第 5 代）3/5（第 330 页）
- 12.9 英寸 iPad Pro（第 5 代）4/5（第 331 页）
- 12.9 英寸 iPad Pro（第 5 代）5/5（第 332 页）
- 11 英寸 iPad Pro（第 3 代）1/5（第 333 页）
- 11 英寸 iPad Pro（第 3 代）2/5（第 334 页）
- 11 英寸 iPad Pro（第 3 代）3/5（第 335 页）
- 11 英寸 iPad Pro（第 3 代）4/5（第 336 页）
- 11 英寸 iPad Pro（第 3 代）5/5（第 337 页）
- 12.9 英寸 iPad Pro（第 4 代）1/5（第 338 页）
- 12.9 英寸 iPad Pro（第 4 代）2/5（第 339 页）
- 12.9 英寸 iPad Pro（第 4 代）3/5（第 340 页）
- 12.9 英寸 iPad Pro（第 4 代）4/5（第 341 页）
- 12.9 英寸 iPad Pro（第 4 代）5/5（第 342 页）
- 11 英寸 iPad Pro（第 2 代）1/5（第 343 页）
- 11 英寸 iPad Pro（第 2 代）2/5（第 344 页）
- 11 英寸 iPad Pro（第 2 代）3/5（第 345 页）
- 11 英寸 iPad Pro（第 2 代）4/5（第 346 页）
- 11 英寸 iPad Pro（第 2 代）5/5（第 347 页）
- iPad Air（第 3 代）无线局域网机型 1/3（第 348 页）
- iPad Air（第 3 代）无线局域网机型 2/3（第 349 页）
- iPad Air（第 3 代）无线局域网机型 3/3（第 350 页）

2023/10/10 | 版权所有 © 2023 Apple Inc. 保留所有权利。

- iPad Air（第 3 代）无线局域网 + 蜂窝网络机型 1/3（第 351 页）
- iPad Air（第 3 代）无线局域网 + 蜂窝网络机型 2/3（第 352 页）
- iPad Air（第 3 代）无线局域网 + 蜂窝网络机型 3/3（第 353 页）
- iPad mini（第 5 代）无线局域网机型 1/3（第 354 页）
- iPad mini（第 5 代）无线局域网机型 2/3（第 355 页）
- iPad mini（第 5 代）无线局域网机型 3/3（第 356 页）
- iPad mini（第 5 代）无线局域网 + 蜂窝网络机型 1/3（第 357 页）
- iPad mini（第 5 代）无线局域网 + 蜂窝网络机型 2/3（第 358 页）
- iPad mini（第 5 代）无线局域网 + 蜂窝网络机型 3/3（第 359 页）
- 12.9 英寸 iPad Pro（第 3 代）1/3（第 360 页）
- 12.9 英寸 iPad Pro（第 3 代）2/3（第 361 页）
- 12.9 英寸 iPad Pro（第 3 代）3/3（第 362 页）
- 11 英寸 iPad Pro（第 1 代）1/3（第 363 页）
- 11 英寸 iPad Pro（第 1 代）2/3（第 364 页）
- 11 英寸 iPad Pro（第 1 代）3/3（第 365 页）
- 12.9 英寸 iPad Pro（第 2 代）无线局域网机型（第 366 页）
- 12.9 英寸 iPad Pro（第 2 代）无线局域网 + 蜂窝网络机型（第 367 页）
- 12.9 英寸 iPad Pro（第 2 代）磁体/霍尔效应传感器 1/2（第 368 页）
- 12.9 英寸 iPad Pro（第 2 代）磁体/霍尔效应传感器 2/2（第 369 页）
- 10.5 英寸 iPad Pro 无线局域网机型（第 370 页）
- 10.5 英寸 iPad Pro 无线局域网 + 蜂窝网络机型（第 371 页）
- 10.5 英寸 iPad Pro 磁体/霍尔效应传感器 1/2（第 372 页）
- 10.5 英寸 iPad Pro 磁体/霍尔效应传感器 2/2（第 373 页）
- iPad（第 5 代和第 6 代）无线局域网 + 蜂窝网络机型（第 374 页）
- iPad（第 5 代和第 6 代）磁体/霍尔效应传感器 1/2（第 375 页）
- iPad（第 5 代和第 6 代）磁体/霍尔效应传感器 2/2（第 376 页）
- 9.7 英寸 iPad Pro 无线局域网机型（第 377 页）
- 9.7 英寸 iPad Pro 无线局域网 + 蜂窝网络机型（第 378 页）
- 9.7 英寸 iPad Pro 磁体/霍尔效应传感器 1/2（第 379 页）
- 9.7 英寸 iPad Pro 磁体/霍尔效应传感器 2/2（第 380 页）
- 12.9 英寸 iPad Pro（第 1 代）无线局域网机型（第 381 页）
- 12.9 英寸 iPad Pro（第 1 代）无线局域网 + 蜂窝网络机型（第 382 页）
- 12.9 英寸 iPad Pro（第 1 代）磁体/霍尔效应传感器 1/2（第 383 页）
- 12.9 英寸 iPad Pro（第 1 代）磁体/霍尔效应传感器 2/2（第 384 页）
- iPad mini 4 无线局域网机型（第 385 页）
- iPad mini 4 无线局域网 + 蜂窝网络机型（第 386 页）
- iPad mini 4 磁体/霍尔效应传感器（第 387 页）
- iPad Air 2 无线局域网机型（第 388 页）
- iPad Air 2 无线局域网 + 蜂窝网络机型（第 389 页）
- iPad mini 2 和 iPad mini 3 无线局域网机型（第 390 页）

2023/10/10 | 版权所有 © 2023 Apple Inc. 保留所有权利。

- iPad mini 2 和 iPad mini 3 无线局域网 + 蜂窝网络机型（第 391 页）
- iPad Air 无线局域网机型（第 392 页）
- iPad Air 无线局域网 + 蜂窝网络机型（第 393 页）
- iPad mini 无线局域网机型（第 394 页）
- iPad mini 无线局域网 + 蜂窝网络机型（第 395 页）
- iPad（第 4 代）无线局域网机型（第 396 页）
- iPad（第 4 代）无线局域网 + 蜂窝网络机型（第 397 页）
- iPod touch（第 6 代）和 iPod touch（第 7 代）（第 398 页）
- iPod touch（第 5 代）（第 399 页）
- Apple Watch Ultra 2，1/3（第 400 页）
- Apple Watch Ultra 2，2/3（第 401 页）
- Apple Watch Ultra 2，3/3（第 402 页）
- Apple Watch Series 9（45 毫米）（第 403 页）
- Apple Watch Series 9（41 毫米）（第 404 页）
- Apple Watch Ultra，1/3（第 405 页）
- Apple Watch Ultra，2/3（第 406 页）
- Apple Watch Ultra，3/3（第 407 页）
- Apple Watch Series 8（45 毫米）（第 408 页）
- Apple Watch Series 8（41 毫米）（第 409 页）
- Apple Watch SE（44 毫米）（第 410 页）
- Apple Watch SE（40 毫米）（第 411 页）
- Apple Watch Series 7（45 毫米）（第 412 页）
- Apple Watch Series 7（41 毫米）（第 413 页）
- Apple Watch Series 6（44 毫米）（第 414 页）
- Apple Watch Series 6（40 毫米）（第 415 页）
- Apple Watch SE（第 1 代）（44 毫米）（第 416 页）
- Apple Watch SE（第 1 代）（40 毫米）（第 417 页）
- Apple Watch Series 5（44 毫米）（第 418 页）
- Apple Watch Series 5（40 毫米）（第 419 页）
- Apple Watch Series 5（陶瓷，44 毫米）（第 420 页）
- Apple Watch Series 5（陶瓷，40 毫米）（第 421 页）
- Apple Watch Series 4（44 毫米）（第 422 页）
- Apple Watch Series 4（40 毫米）（第 423 页）
- Apple Watch Series 3（陶瓷，42 毫米）（第 424 页）
- Apple Watch Series 3（陶瓷，38 毫米）（第 425 页）
- Apple Watch Series 3（金属，42 毫米）（第 426 页）
- Apple Watch Series 3（金属，38 毫米）（第 427 页）
- Apple Watch Series 2（陶瓷，42 毫米）（第 428 页）
- Apple Watch Series 2（陶瓷，38 毫米）（第 429 页）
- Apple Watch Series 2（金属，42 毫米）（第 430 页）

2023/10/10 | 版权所有 © 2023 Apple Inc. 保留所有权利。

- Apple Watch Series 2（金属，38 毫米）（第 431 页）
- Apple Watch（第 1 代）和 Apple Watch Series 1（42 毫米）（第 432 页）
- Apple Watch（第 1 代）和 Apple Watch Series 1（38 毫米）（第 433 页）
- 适用于 AirPods Pro（第 2 代）的 MagSafe 充电盒 (USB-C) 1/3（第 434 页）
- 适用于 AirPods Pro（第 2 代）的 MagSafe 充电盒 (USB-C) 2/3（第 435 页）
- 适用于 AirPods Pro（第 2 代）的 MagSafe 充电盒 (USB-C) 3/3（第 436 页）
- 适用于 AirPods Pro（第 2 代）的 MagSafe 充电盒 1/3（第 437 页）
- 适用于 AirPods Pro（第 2 代）的 MagSafe 充电盒 2/3（第 438 页）
- 适用于 AirPods Pro（第 2 代）的 MagSafe 充电盒 3/3（第 439 页）
- AirPods Pro（第 2 代）（第 440 页）
- 适用于 AirPods（第 3 代）的 MagSafe 充电盒（第 441 页）
- AirPods（第 3 代）（第 442 页）
- 适用于 AirPods Pro（第 1 代）的无线充电盒（第 443 页）
- AirPods Pro（第 1 代）（第 444 页）
- 适用于 AirPods 的无线充电盒（第 445 页）
- AirPods（第 1 代）和 AirPods（第 2 代）（第 446 页）
- AirTag（第 447 页）
- Apple TV 4K（第 3 代）（第 448 页）
- Siri Remote（第 3 代）（第 449 页）

2023/10/10 | 版权所有 © 2023 Apple Inc. 保留所有权利。

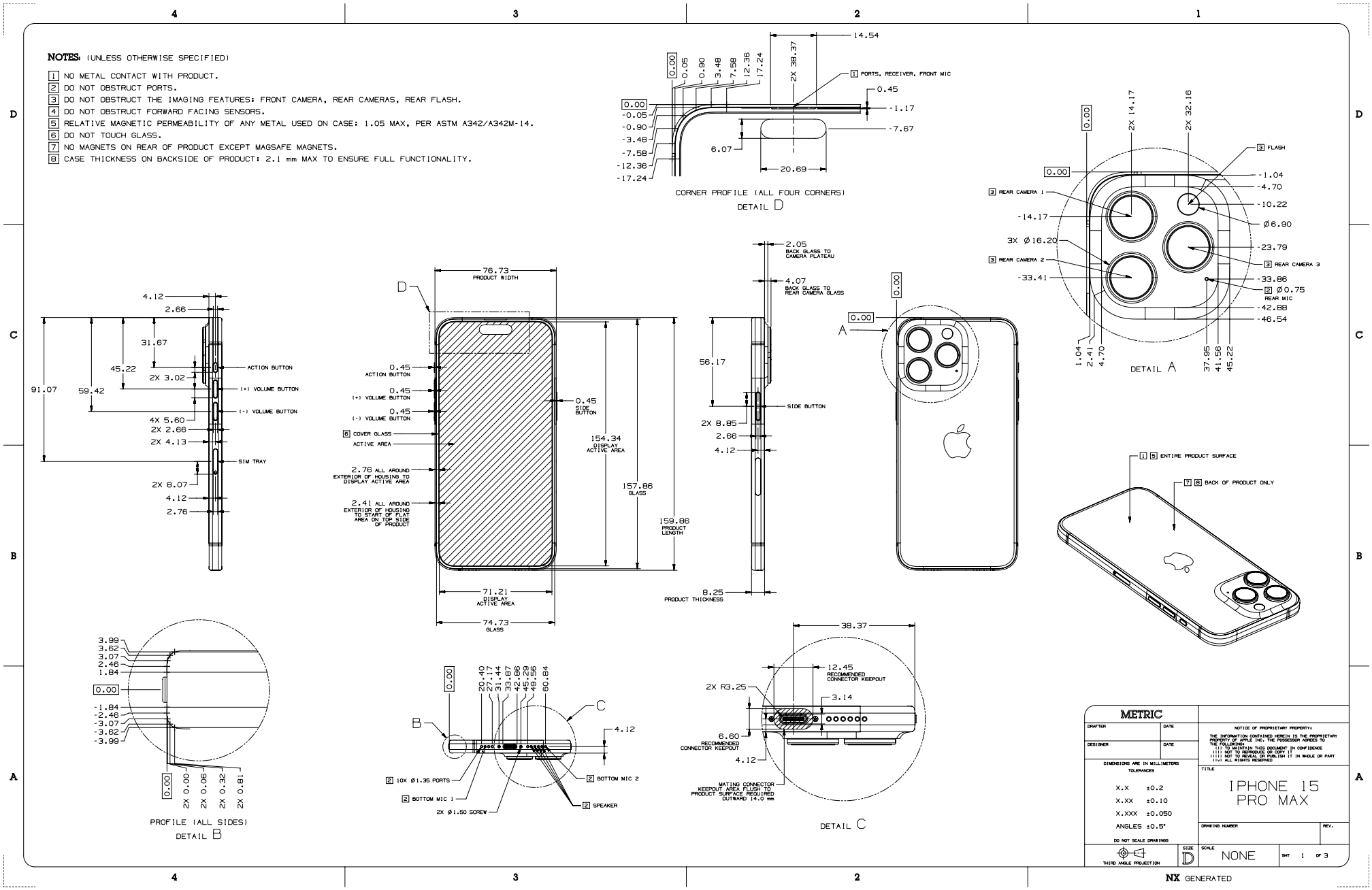
NOTES: (UNLESS OTHERWISE SPECIFIED)
1 NO METAL CONTACT WITH PRODUCT.
2 DO NOT OBSTRUCT PORTS.
3 DO NOT OBSTRUCT THE IMAGING FEATURES: FRONT CAMERA, REAR CAMERAS, REAR FLASH.
4 DO NOT OBSTRUCT FORWARD FACING SENSORS.
5 RELATIVE MAGNETIC PERMEABILITY OF ANY METAL USED ON CASE: 1.05 MAX, PER ASTM A342/A342M-14.
6 DO NOT TOUCH GLASS.
7 NO MAGNETS ON REAR OF PRODUCT EXCEPT MAGSAFE MAGNETS.
8 CASE THICKNESS ON BACKSIDE OF PRODUCT: 2.1 mm MAX TO ENSURE FULL FUNCTIONALITY.
CORNER PROFILE (ALL FOUR CORNERS)
DETAIL D
DETAIL A
DETAIL B
DETAIL C
PROFILE (ALL SIDES)
METRIC
IPHONE 15 PRO MAX
NONE
NX GENERATED

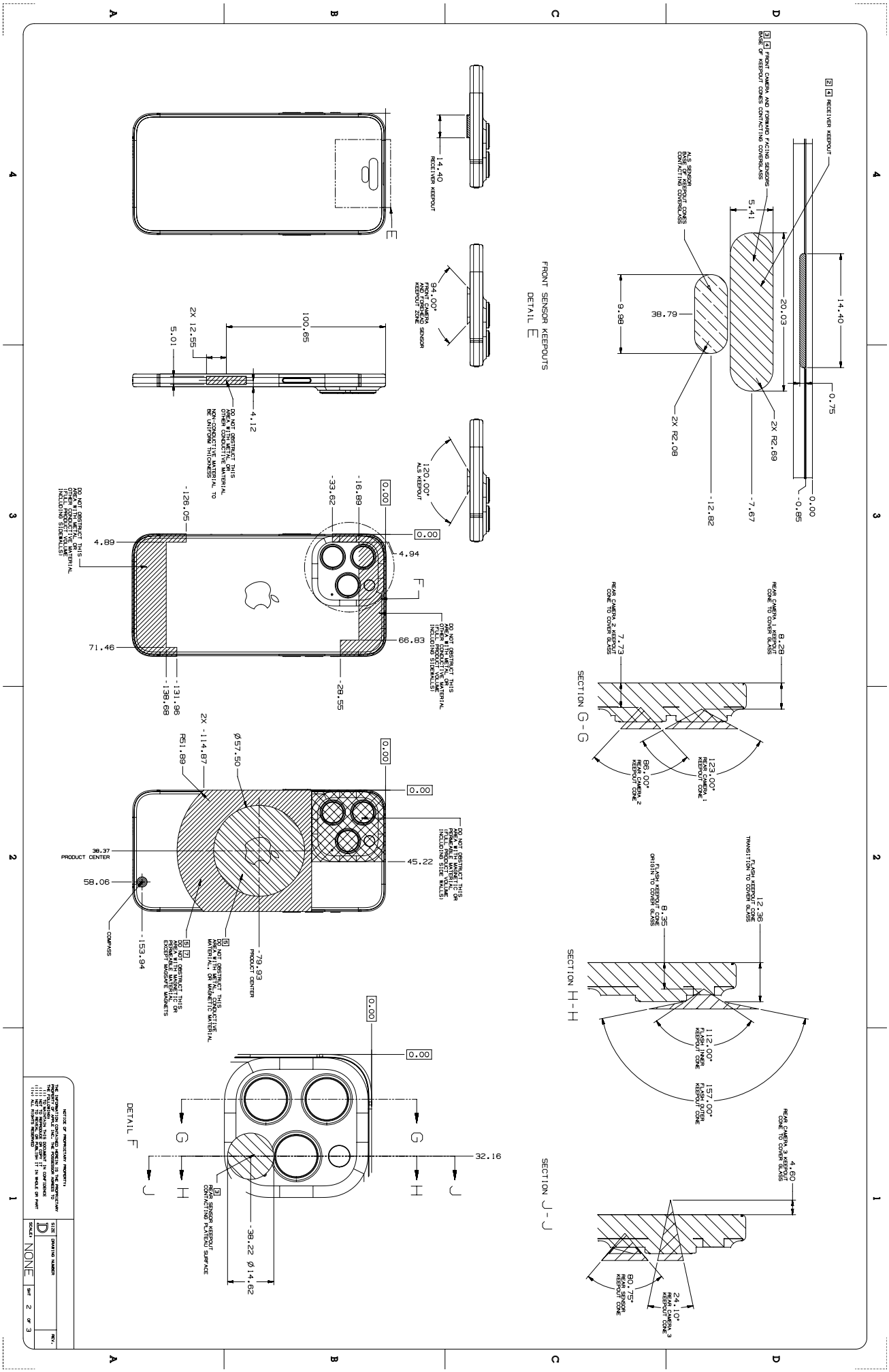
RECEIVER KEEPOUT
FRONT CAMERA AND FORWARD FACING SENSORS BASE OF KEEPOUT CONES CONTACTING COVERGLASS
ALS SENSOR BASE OF KEEPOUT CONES CONTACTING COVERGLASS
14.40
20.03
5.41
38.79
9.98
0.75
0.00
-0.85
-7.67
-12.82
2X R2.69
2X R2.08
FRONT SENSOR KEEPOUTS
DETAIL E
14.40
RECEIVER KEEPOUT
94.00°
FRONT CAMERA KEEPOUT CONE
SENSOR ZONE
100.65
2X 12.55
5.01
4.12
DO NOT OBSTRUCT THIS AREA WITH METAL OR OTHER CONDUCTIVE MATERIAL TO BE UNIFORM THICKNESS
120.00°
ALS KEEPOUT
-126.05
-33.62
-16.89
0.00
4.89
4.94
DO NOT OBSTRUCT THIS AREA WITH METAL OR OTHER CONDUCTIVE MATERIAL (FULL PRODUCT VOLUME INCLUDING SIDEWALLS)
71.46
66.83
-28.55
-131.96
-136.68
SECTION G - G
REAR CAMERA 3 KEEPOUT CONE TO COVER GLASS
7.73
REAR CAMERA 1 KEEPOUT CONE TO COVER GLASS
8.29
80.00°
REAR CAMERA 2 KEEPOUT CONE
123.00°
REAR CAMERA 1 KEEPOUT CONE
SECTION H - H
FLASH KEEPOUT CONE TRANSITION TO COVER GLASS
12.36
FLASH KEEPOUT CONE ORIGIN TO COVER GLASS
8.35
112.00°
FLASH INNER KEEPOUT CONE
157.00°
FLASH OUTER KEEPOUT CONE
SECTION J - J
REAR CAMERA 3 KEEPOUT CONE TO COVER GLASS
4.60
80.75°
REAR SENSOR KEEPOUT CONE
24.10°
REAR CAMERA 3 KEEPOUT CONE
2X - 114.87
R51.89
Ø57.50
0.00
0.00
DO NOT OBSTRUCT THIS AREA WITH MAGNETIC OR FERROMAGNETIC (FULL PRODUCT VOLUME INCLUDING SIDE WALLS)
38.37
PRODUCT CENTER
58.06
45.22
COMPASS
-153.94
DO NOT OBSTRUCT THIS AREA WITH MAGNETIC OR MAGNETIC MATERIAL
-79.93
PRODUCT CENTER
DETAIL F
0.00
0.00
G
H
J
32.16
-38.22
Ø14.62
SENSOR KEEPOUT CLEAR GLASS COVER PLATEOUT SURFACE
NOTICE OF PROPRIETARY PROPERTY
THE INFORMATION CONTAINED HEREIN IS THE PROPRIETARY PROPERTY OF APPLE INC. AND IS TO BE HELD IN CONFIDENCE. THE FOLLOWING IN THIS DOCUMENT IN CONFIDENCE IS NOT TO BE REPRODUCED OR DISCLOSED IT IN WHOLE OR PART
ALL RIGHTS RESERVED
SIZE
D
DRAWING NUMBER
REV.
SCALE
NONE
SHT 2 OF 3

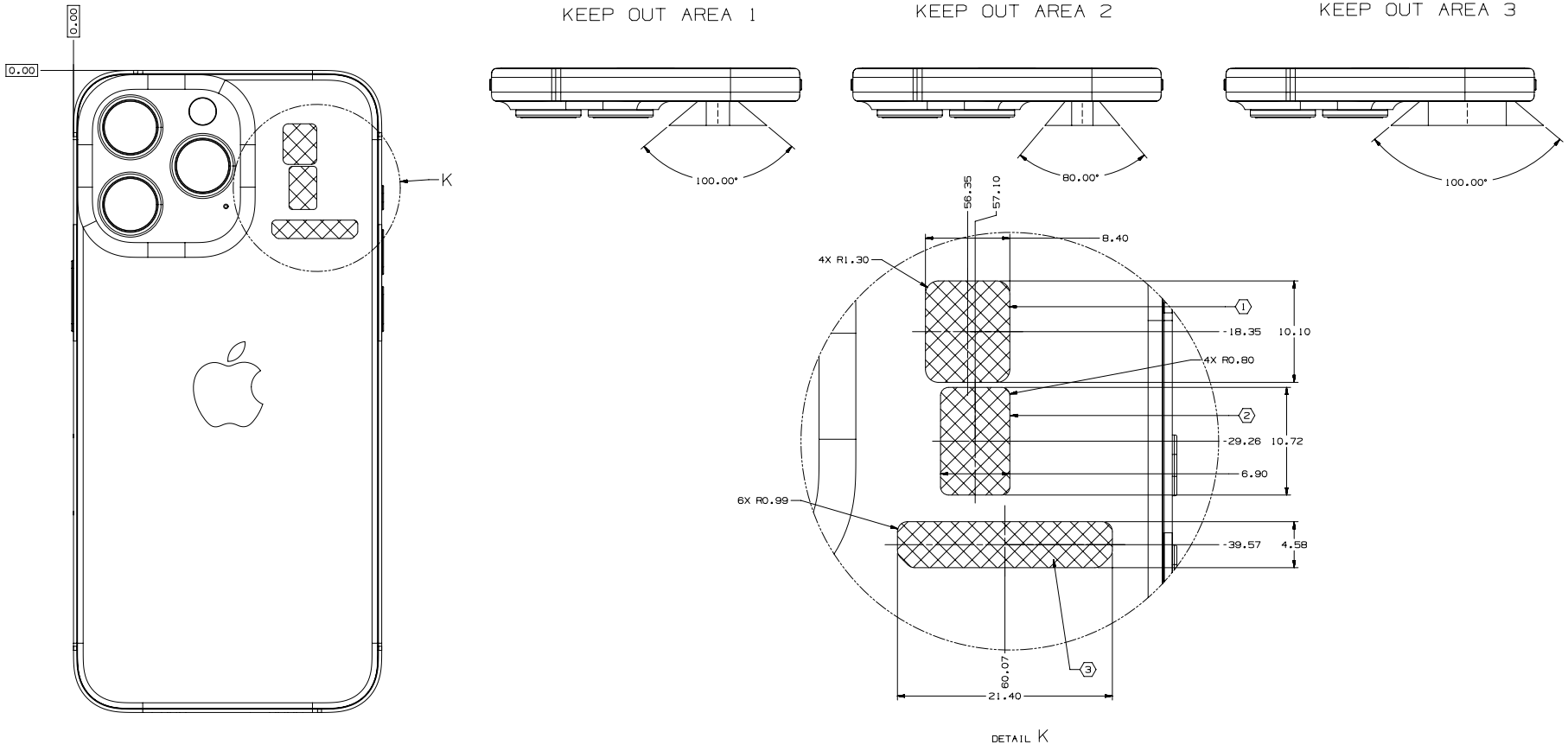
0.00
0.00
K
KEEP OUT AREA 1
100.00°
KEEP OUT AREA 2
80.00°
KEEP OUT AREA 3
100.00°
56.35
57.10
8.40
4X R1.30
1
18.35
10.10
4X R0.80
2
29.26
10.72
6.90
6X R0.99
39.57
4.58
3
60.07
21.40
DETAIL K
NOTICE OF PROPRIETARY PROPERTY:
THE INFORMATION CONTAINED HEREIN IS THE PROPRIETARY PROPERTY OF APPLE INC. THE POSSESSOR AGREES TO THE FOLLOWING:
(i) TO MAINTAIN THIS DOCUMENT IN CONFIDENCE
(ii) NOT TO REPRODUCE OR COPY IT
(iii) NOT TO REVEAL OR PUBLISH IT IN WHOLE OR PART
(iv) ALL RIGHTS RESERVED
SIZE
D
DRAWING NUMBER
REV.
SCALE: NONE
SHT 3 OF 3

NOTES: (UNLESS OTHERWISE SPECIFIED)

1. NO METAL CONTACT WITH PRODUCT.
2. DO NOT OBSTRUCT PORTS.
3. DO NOT OBSTRUCT THE IMAGING FEATURES: FRONT CAMERA, REAR CAMERAS, REAR FLASH.
4. DO NOT OBSTRUCT FORWARD FACING SENSORS.
5. RELATIVE MAGNETIC PERMEABILITY OF ANY METAL USED ON CASE: 1.05 MAX, PER ASTM A342/A342M-14.
6. DO NOT TOUCH GLASS.
7. NO MAGNETS ON REAR OF PRODUCT EXCEPT MAGSAFE MAGNETS.
8. CASE THICKNESS ON BACKSIDE OF PRODUCT: 2.1 mm MAX TO ENSURE FULL FUNCTIONALITY.

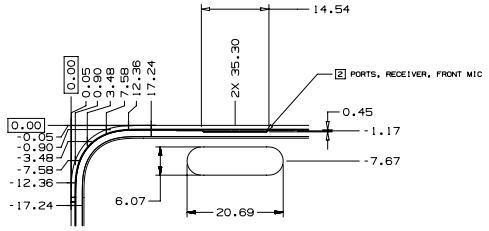

CORNER PROFILE (ALL FOUR CORNERS)
DETAIL A

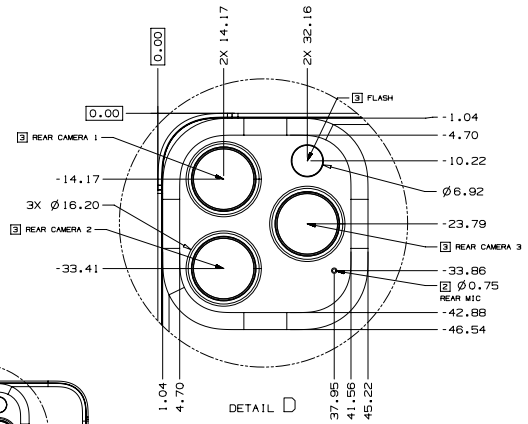

DETAIL D

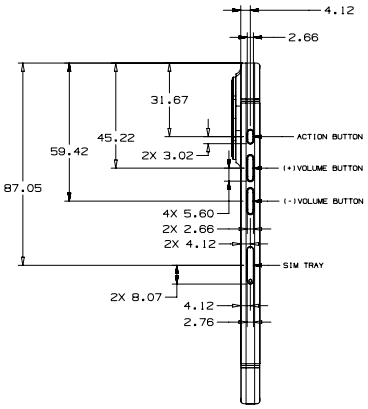

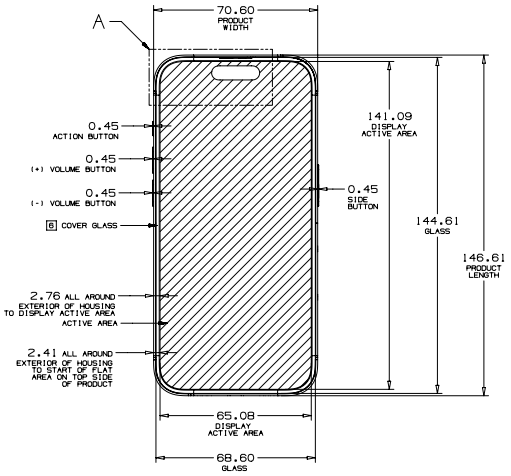

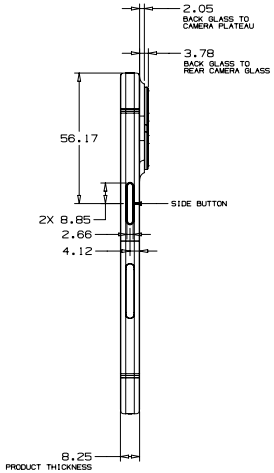

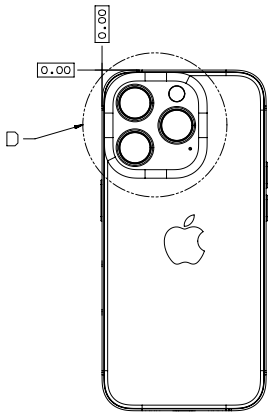

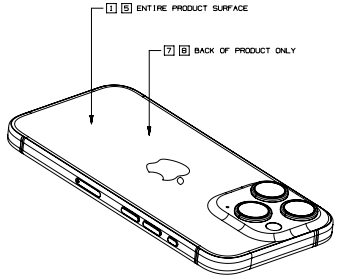

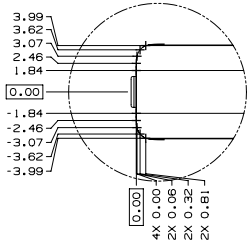

PROFILE (ALL SIDES)
DETAIL B

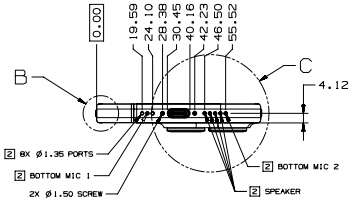

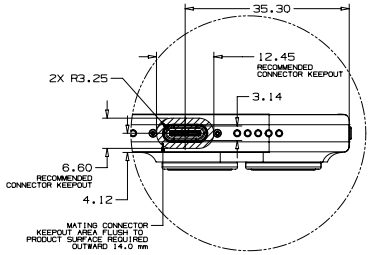

DETAIL C

METRIC	
DRAFTER / DATE	NOTICE OF PROPRIETARY PROPERTY: THE INFORMATION CONTAINED HEREIN IS THE PROPRIETARY PROPERTY OF APPLE INC. THE POSSESSOR AGREES TO THE FOLLOWING: (i) TO MAINTAIN THIS DOCUMENT IN CONFIDENCE (ii) NOT TO REPRODUCE OR COPY IT (iii) NOT TO REVEAL OR PUBLISH IT IN WHOLE OR PART (iv) ALL RIGHTS RESERVED
DESIGNER / DATE	
DIMENSIONS ARE IN MILLIMETERS TOLERANCES X.X ±0.2 X.XX ±0.10 X.XXX ±0.050 ANGLES ±0.5° DO NOT SCALE DRAWINGS	TITLE: IPHONE 15 PRO
	DRAWING NUMBER / REV.
THIRD ANGLE PROJECTION / SIZE D	SCALE NONE / SHT 1 OF 3

NX GENERATED

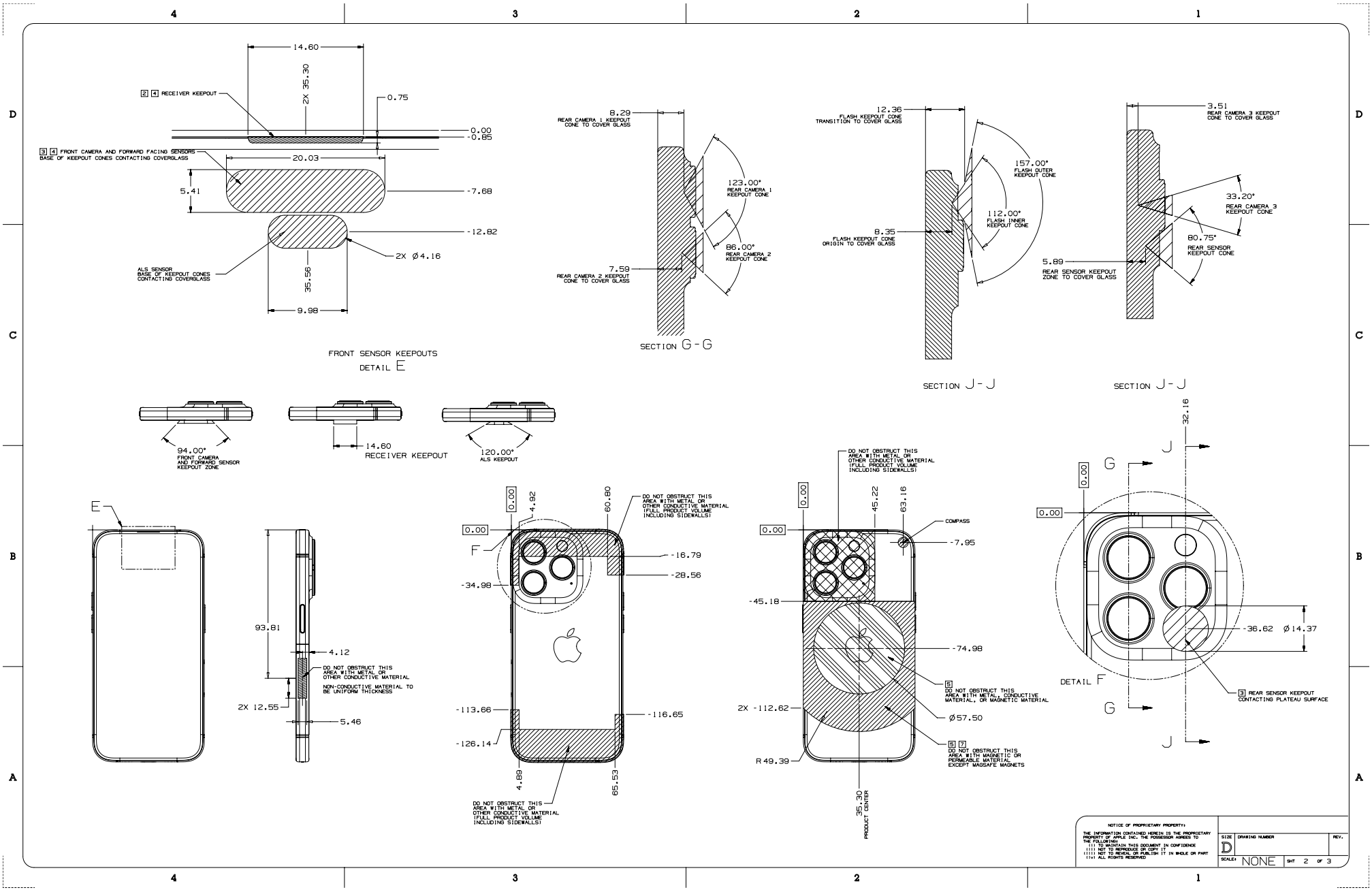
14.60
2X 35.30
0.75
[2] [4] RECEIVER KEEPOUT
0.00
-0.85
[3] [4] FRONT CAMERA AND FORWARD FACING SENSORS BASE OF KEEPOUT CONES CONTACTING COVERGLASS
20.03
5.41
-7.68
-12.82
2X Ø4.16
ALS SENSOR BASE OF KEEPOUT CONES CONTACTING COVERGLASS
35.56
9.98
FRONT SENSOR KEEPOUTS
DETAIL E
8.29
REAR CAMERA 1 KEEPOUT CONE TO COVER GLASS
123.00°
REAR CAMERA 1 KEEPOUT CONE
86.00°
REAR CAMERA 2 KEEPOUT CONE
7.59
REAR CAMERA 2 KEEPOUT CONE TO COVER GLASS
SECTION G - G
12.36
FLASH KEEPOUT CONE TRANSITION TO COVER GLASS
157.00°
FLASH OUTER KEEPOUT CONE
112.00°
FLASH INNER KEEPOUT CONE
8.35
FLASH KEEPOUT CONE ORIGIN TO COVER GLASS
SECTION J - J
3.51
REAR CAMERA 3 KEEPOUT CONE TO COVER GLASS
33.20°
REAR CAMERA 3 KEEPOUT CONE
80.75°
REAR SENSOR KEEPOUT CONE
5.89
REAR SENSOR KEEPOUT ZONE TO COVER GLASS
SECTION J - J
94.00°
FRONT CAMERA AND FORWARD SENSOR KEEPOUT ZONE
14.60
RECEIVER KEEPOUT
120.00°
ALS KEEPOUT
E
93.81
4.12
DO NOT OBSTRUCT THIS AREA WITH METAL OR OTHER CONDUCTIVE MATERIAL
NON-CONDUCTIVE MATERIAL TO BE UNIFORM THICKNESS
2X 12.55
5.46
0.00
4.92
60.80
DO NOT OBSTRUCT THIS AREA WITH METAL OR OTHER CONDUCTIVE MATERIAL (FULL PRODUCT VOLUME INCLUDING SIDEWALLS)
F
-16.79
-28.56
-34.98
-113.66
-116.65
-126.14
4.89
65.53
DO NOT OBSTRUCT THIS AREA WITH METAL OR OTHER CONDUCTIVE MATERIAL (FULL PRODUCT VOLUME INCLUDING SIDEWALLS)
DO NOT OBSTRUCT THIS AREA WITH METAL OR OTHER CONDUCTIVE MATERIAL (FULL PRODUCT VOLUME INCLUDING SIDEWALLS)
0.00
45.22
63.16
COMPASS
-7.95
-45.18
-74.98
[5] DO NOT OBSTRUCT THIS AREA WITH METAL, CONDUCTIVE MATERIAL, OR MAGNETIC MATERIAL
2X -112.62
Ø57.50
R 49.39
[5] [7] DO NOT OBSTRUCT THIS AREA WITH MAGNETIC OR PERMEABLE MATERIAL EXCEPT MAGSAFE MAGNETS
35.30
PRODUCT CENTER
32.16
J
G
0.00
0.00
-36.62
Ø14.37
DETAIL F
[3] REAR SENSOR KEEPOUT CONTACTING PLATEAU SURFACE
G
J
NOTICE OF PROPRIETARY PROPERTY:
THE INFORMATION CONTAINED HEREIN IS THE PROPRIETARY PROPERTY OF APPLE INC. THE POSSESSOR AGREES TO THE FOLLOWING:
(i) TO MAINTAIN THIS DOCUMENT IN CONFIDENCE
(ii) NOT TO REPRODUCE OR COPY IT
(iii) NOT TO REVEAL OR PUBLISH IT IN WHOLE OR PART
(iv) ALL RIGHTS RESERVED
SIZE D
DRAWING NUMBER
REV.
SCALE: NONE
SHT 2 OF 3

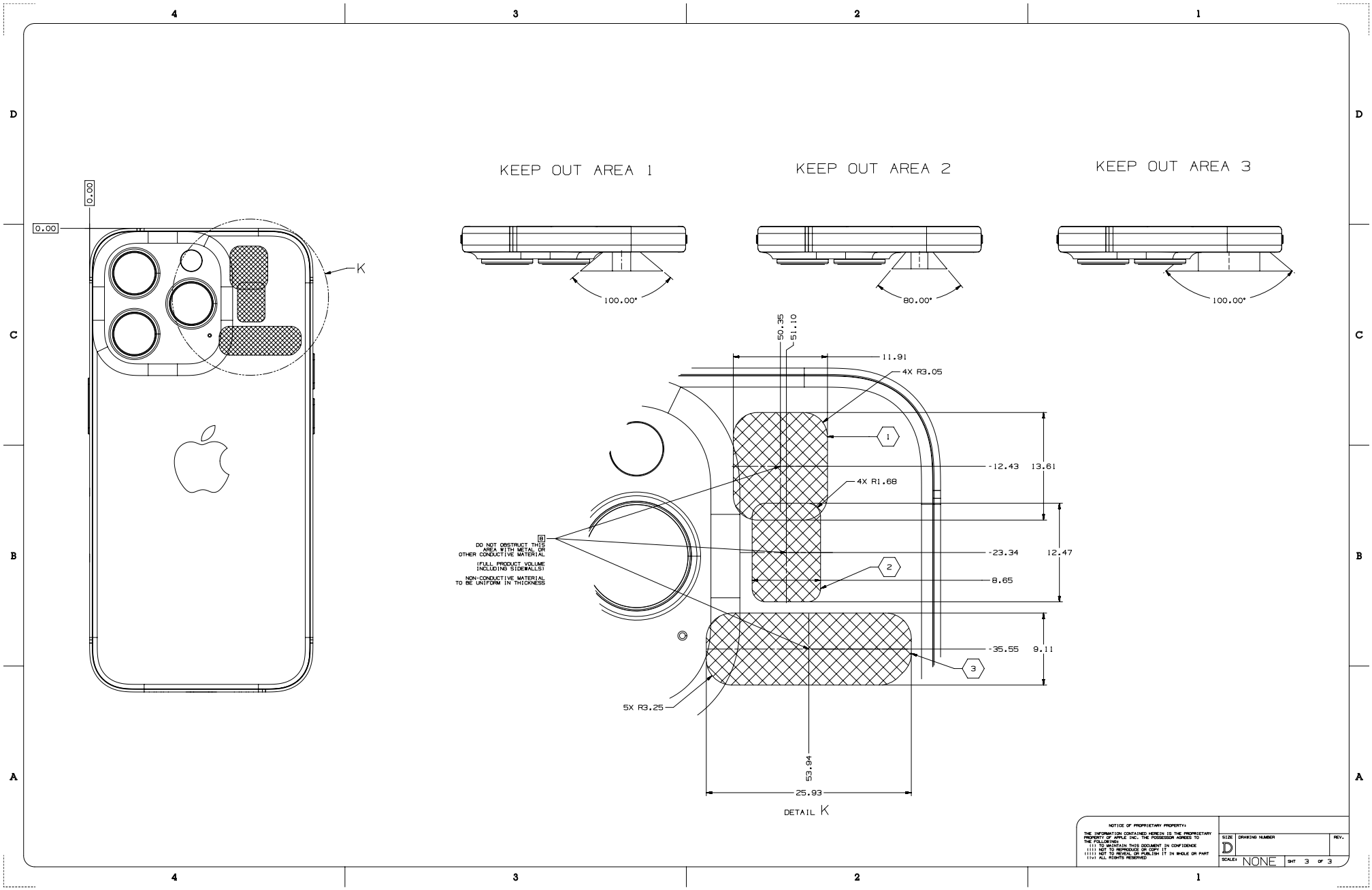
KEEP OUT AREA 1
KEEP OUT AREA 2
KEEP OUT AREA 3
0.00
0.00
K
100.00°
80.00°
100.00°
50.35
51.10
11.91
4X R3.05
1
12.43
13.61
4X R1.68
DO NOT OBSTRUCT THIS AREA WITH METAL OR OTHER CONDUCTIVE MATERIAL
(FULL PRODUCT VOLUME INCLUDING SIDEWALLS)
NON-CONDUCTIVE MATERIAL TO BE UNIFORM IN THICKNESS
23.34
12.47
2
8.65
35.55
9.11
3
5X R3.25
53.94
25.93
DETAIL K
NOTICE OF PROPRIETARY PROPERTY:
THE INFORMATION CONTAINED HEREIN IS THE PROPRIETARY PROPERTY OF APPLE INC. THE POSSESSOR AGREES TO THE FOLLOWING
(i) TO MAINTAIN THIS DOCUMENT IN CONFIDENCE
(ii) NOT TO REPRODUCE OR COPY IT
(iii) NOT TO REVEAL OR PUBLISH IT IN WHOLE OR PART
(iv) ALL RIGHTS RESERVED
SIZE D
DRAWING NUMBER
REV.
SCALE: NONE
SHT 3 OF 3

NOTES: (UNLESS OTHERWISE SPECIFIED)

1. NO METAL CONTACT WITH PRODUCT.
2. DO NOT OBSTRUCT PORTS.
3. DO NOT OBSTRUCT THE IMAGING FEATURES: FRONT CAMERA, REAR CAMERAS, REAR FLASH.
4. DO NOT OBSTRUCT FORWARD FACING SENSORS.
5. RELATIVE MAGNETIC PERMEABILITY OF ANY METAL USED ON CASE: 1.05 MAX, PER ASTM A342/A342M-14.
6. DO NOT TOUCH GLASS.
7. NO MAGNETS ON REAR OF PRODUCT EXCEPT MAGSAFE MAGNETS.
8. CASE THICKNESS ON BACKSIDE OF PRODUCT: 2.1 mm MAX TO ENSURE FULL FUNCTIONALITY.

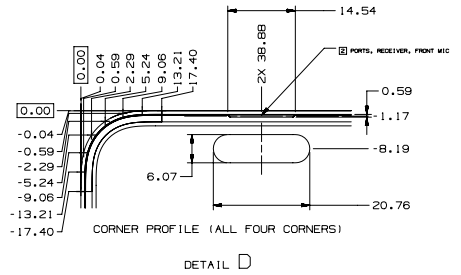

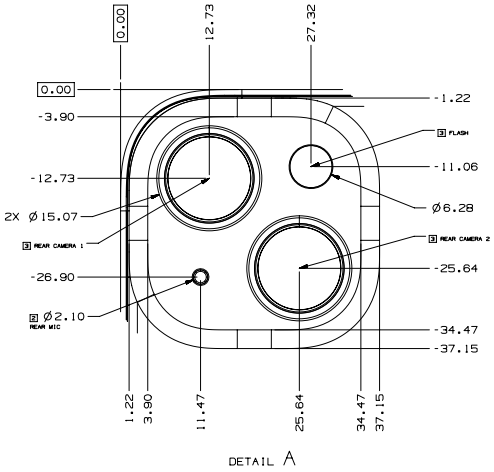

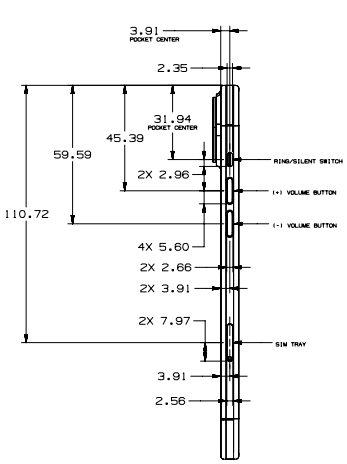

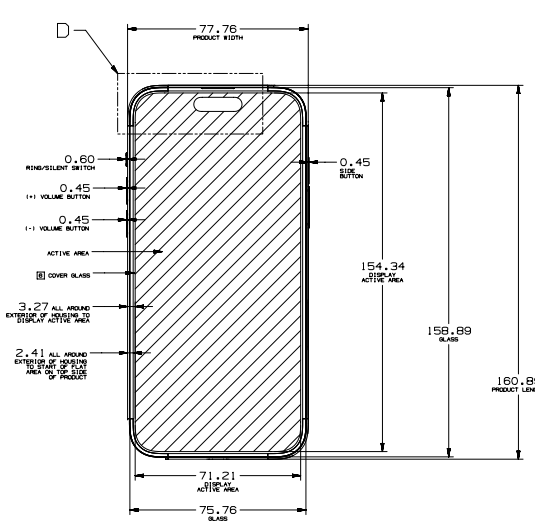

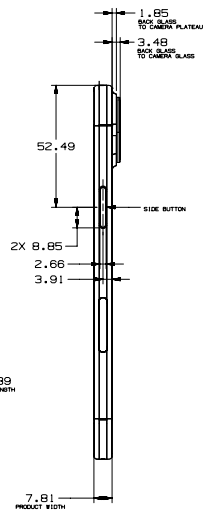

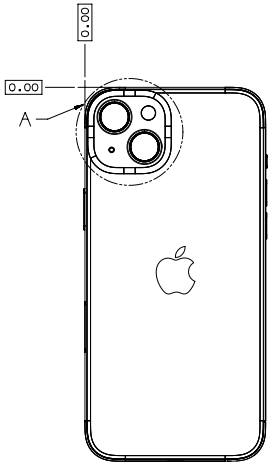

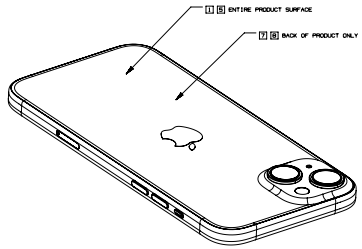

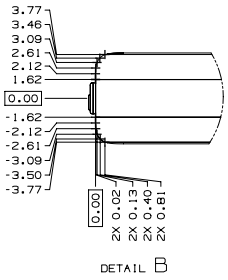

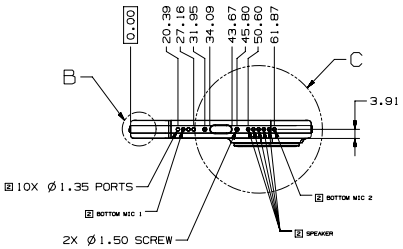

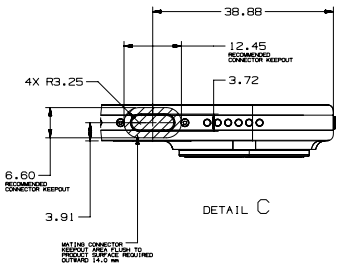

METRIC	
DRAFTER / DESIGNER	DATE
DIMENSIONS ARE IN MILLIMETERS TOLERANCES X.X ±0.2 X.XX ±0.10 X.XXX ±0.050 ANGLES ±0.5° DO NOT SCALE DRAWING	TITLE: IPHONE 15 PLUS DRAWING NUMBER REV.
THIRD ANGLE PROJECTION	SIZE D SCALE NONE SHT 1 OF 3

NOTICE OF PROPRIETARY PROPERTY:
THE INFORMATION CONTAINED HEREIN IS THE PROPRIETARY PROPERTY OF APPLE INC. THE POSSESSOR AGREES TO THE FOLLOWING:
(i) TO MAINTAIN THIS DOCUMENT IN CONFIDENCE
(ii) NOT TO REPRODUCE OR COPY IT
(iii) NOT TO REVEAL OR PUBLISH IT IN WHOLE OR PART
(iv) ALL RIGHTS RESERVED

NX GENERATED

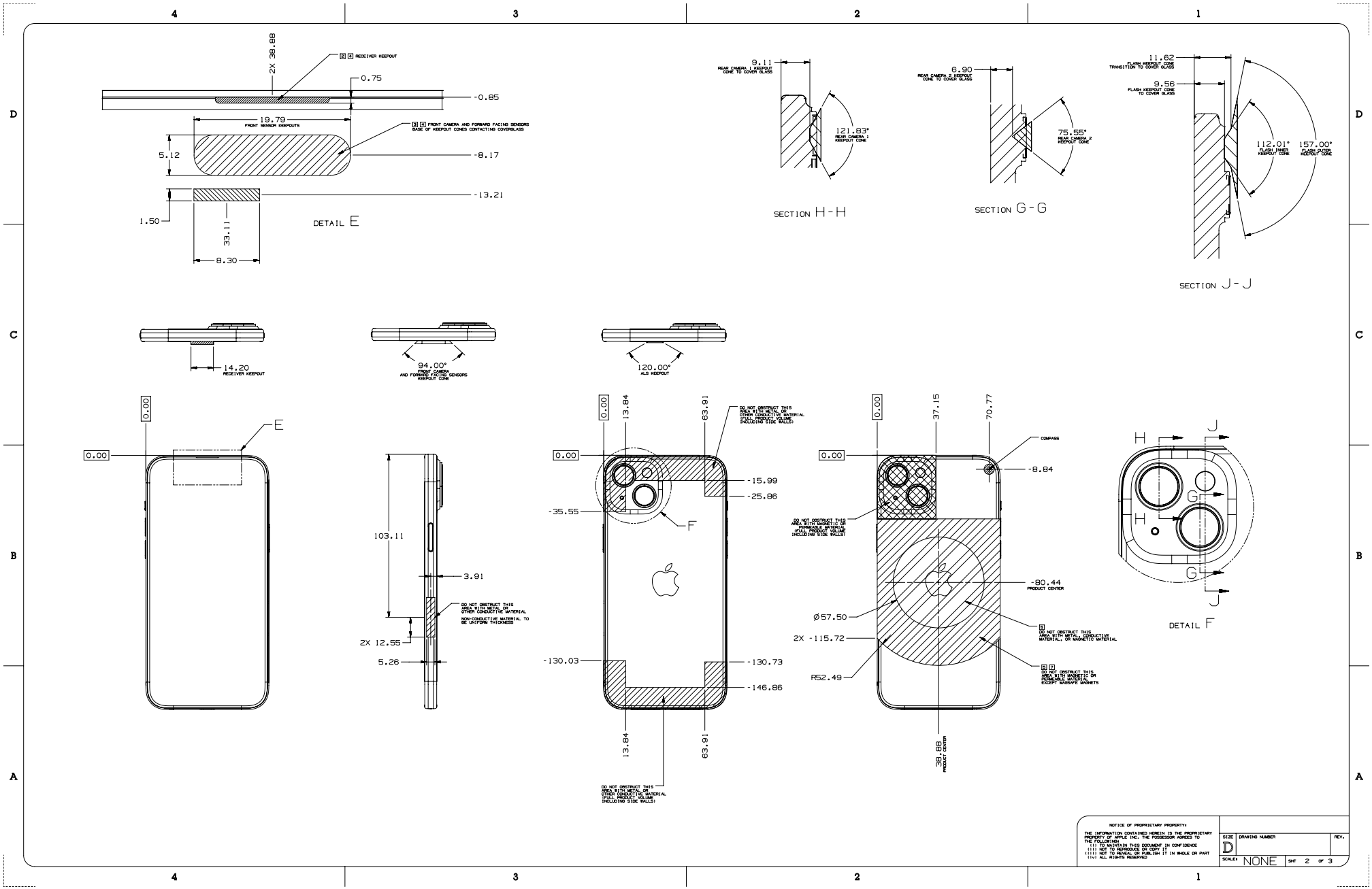
2X 38.88
RECEIVER KEEPOUT
0.75
-0.85
19.79
FRONT SENSOR KEEPOUTS
FRONT CAMERA AND FORWARD FACING SENSORS BASE OF KEEPOUT CONES CONTACTING COVERGLASS
5.12
-8.17
-13.21
1.50
33.11
8.30
DETAIL E
9.11
REAR CAMERA 1 KEEPOUT CONE TO COVER GLASS
121.83°
REAR CAMERA 1 KEEPOUT CONE
SECTION H-H
6.90
REAR CAMERA 2 KEEPOUT CONE TO COVER GLASS
75.55°
REAR CAMERA 2 KEEPOUT CONE
SECTION G-G
11.62
FLASH KEEPOUT CONE TRANSITION TO COVER GLASS
9.56
FLASH KEEPOUT CONE TO COVER GLASS
112.01°
FLASH INNER KEEPOUT CONE
157.00°
FLASH OUTER KEEPOUT CONE
SECTION J-J
14.20
RECEIVER KEEPOUT
94.00°
FRONT CAMERA AND FORWARD FACING SENSORS KEEPOUT CONE
120.00°
ALS KEEPOUT
0.00
E
103.11
3.91
DO NOT OBSTRUCT THIS AREA WITH METAL OR OTHER CONDUCTIVE MATERIAL
NON-CONDUCTIVE MATERIAL TO BE UNIFORM THICKNESS
2X 12.55
5.26
13.84
63.91
-15.99
-25.86
-35.55
F
-130.03
-130.73
-146.86
37.15
70.77
COMPASS
-8.84
-80.44
PRODUCT CENTER
Ø57.50
2X -115.72
R52.49
39.88
H
J
G
DETAIL F
NOTICE OF PROPRIETARY PROPERTY
SIZE D
DRAWING NUMBER
REV.
SCALE: NONE
SHT 2 OF 3

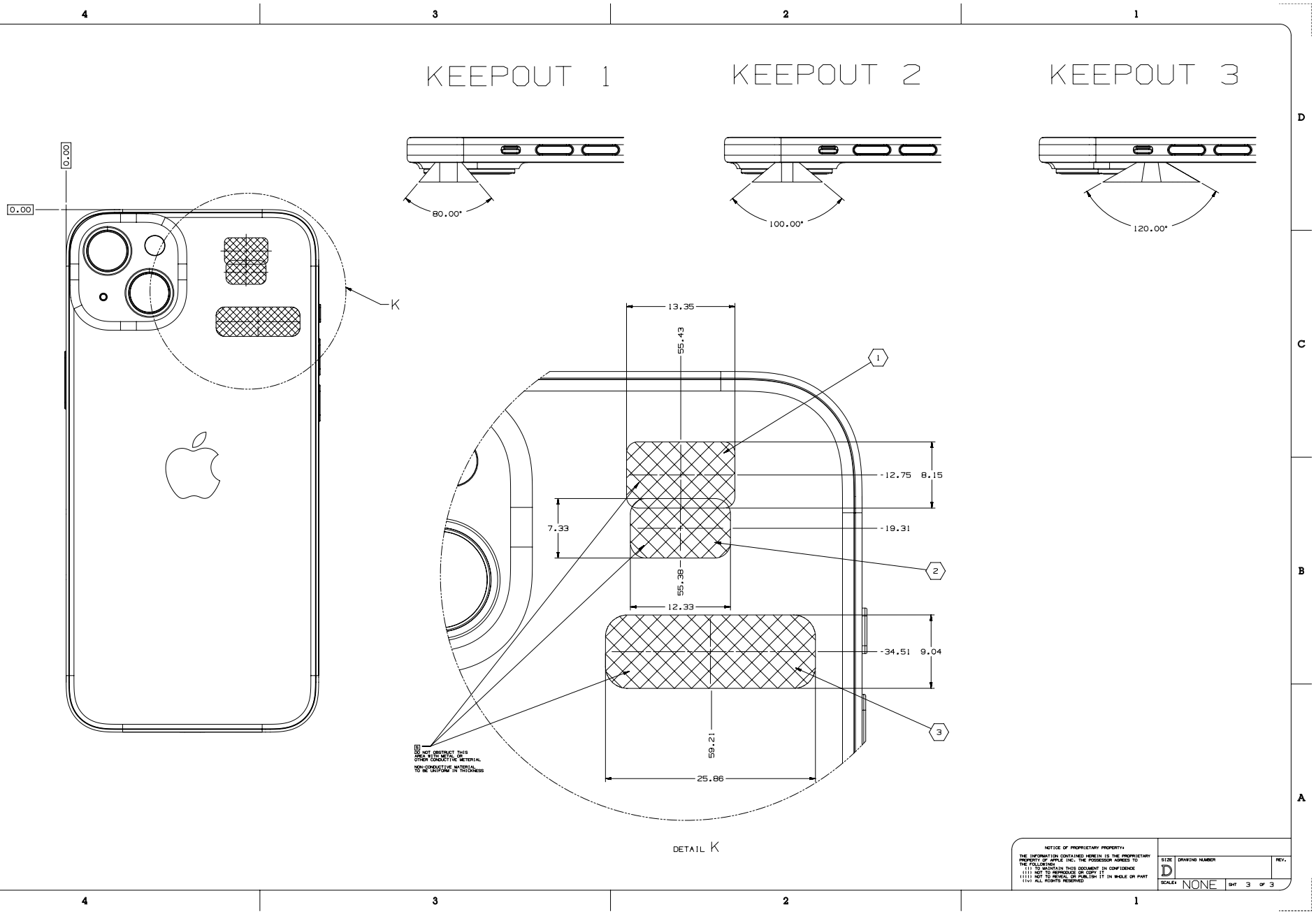
KEEPOUT 1
KEEPOUT 2
KEEPOUT 3
80.00°
100.00°
120.00°
0.00
0.00
K
13.35
55.43
12.75
8.15
19.31
7.33
55.38
12.33
34.51
9.04
59.21
25.86
1
2
3
DETAIL K
NOTICE OF PROPRIETARY PROPERTY:
SIZE
DRAWING NUMBER
REV.
D
SCALE: NONE
SHT 3 OF 3

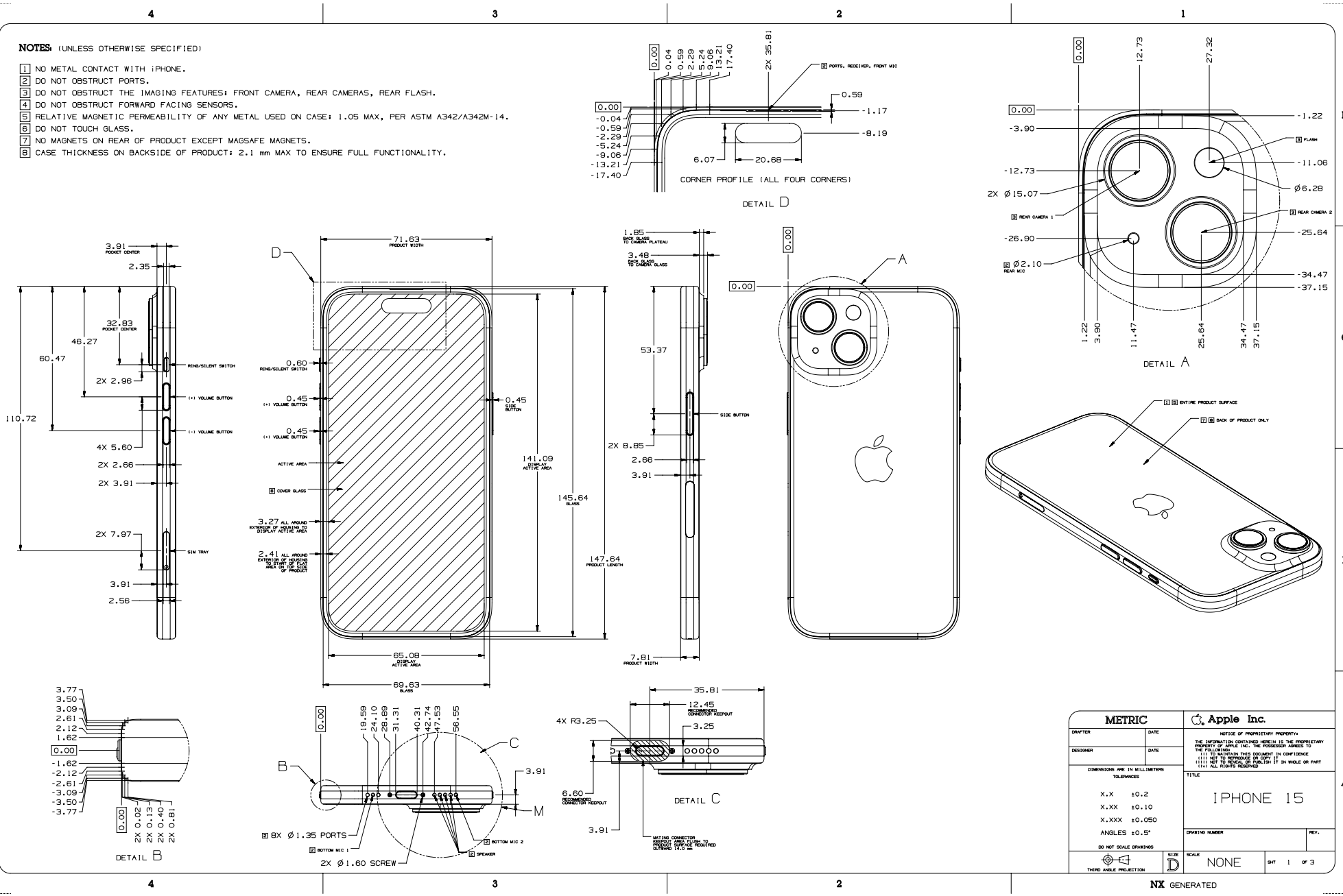
NOTES: (UNLESS OTHERWISE SPECIFIED)
1 NO METAL CONTACT WITH iPHONE.
2 DO NOT OBSTRUCT PORTS.
3 DO NOT OBSTRUCT THE IMAGING FEATURES: FRONT CAMERA, REAR CAMERAS, REAR FLASH.
4 DO NOT OBSTRUCT FORWARD FACING SENSORS.
5 RELATIVE MAGNETIC PERMEABILITY OF ANY METAL USED ON CASE: 1.05 MAX, PER ASTM A342/A342M-14.
6 DO NOT TOUCH GLASS.
7 NO MAGNETS ON REAR OF PRODUCT EXCEPT MAGSAFE MAGNETS.
8 CASE THICKNESS ON BACKSIDE OF PRODUCT: 2.1 mm MAX TO ENSURE FULL FUNCTIONALITY.
CORNER PROFILE (ALL FOUR CORNERS)
DETAIL D
DETAIL A
DETAIL B
DETAIL C
METRIC
Apple Inc.
IPHONE 15
NONE
NX GENERATED

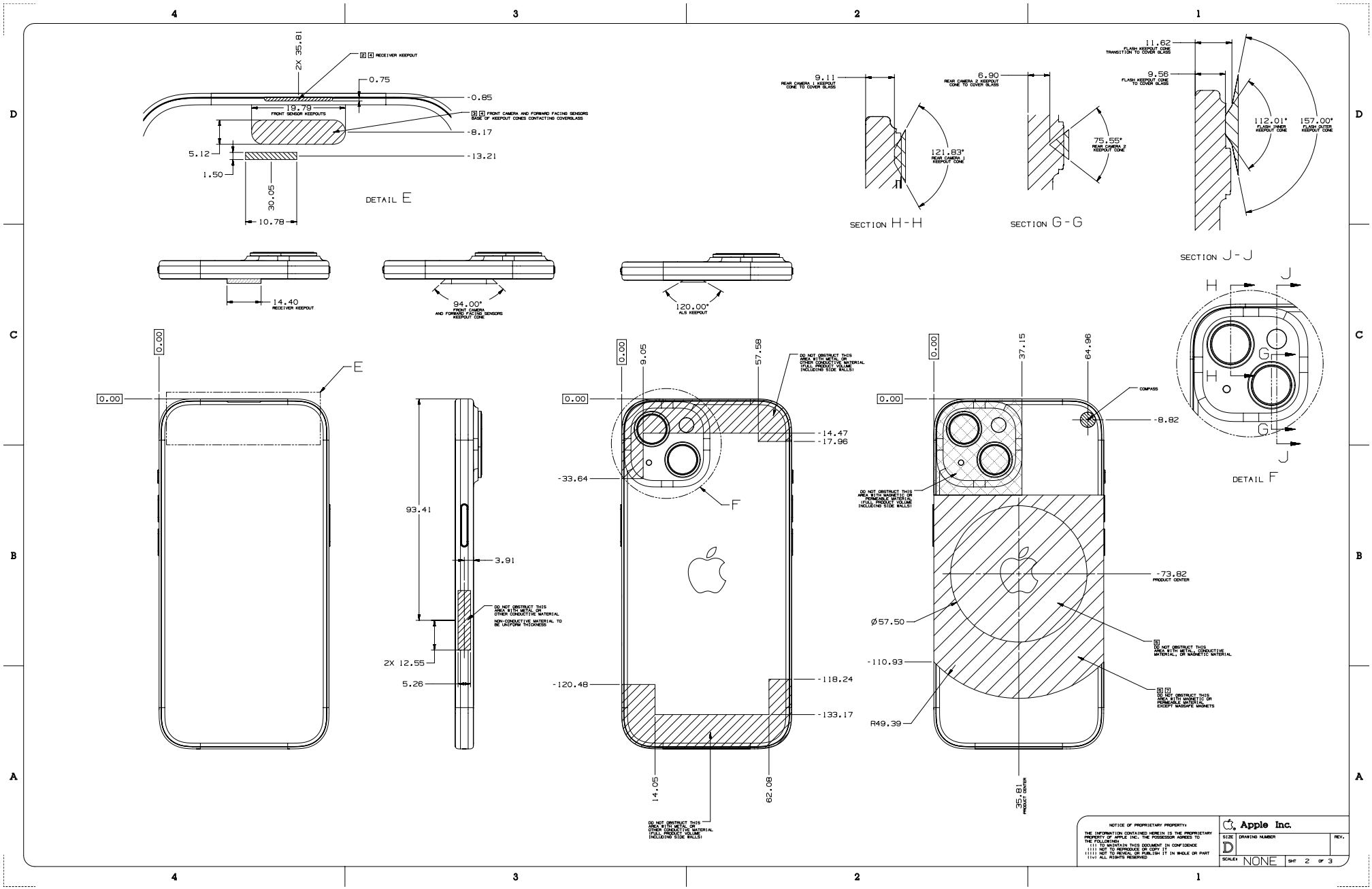
DETAIL E
SECTION H-H
SECTION G-G
SECTION J-J
DETAIL F
Apple Inc.
NOTICE OF PROPRIETARY PROPERTY

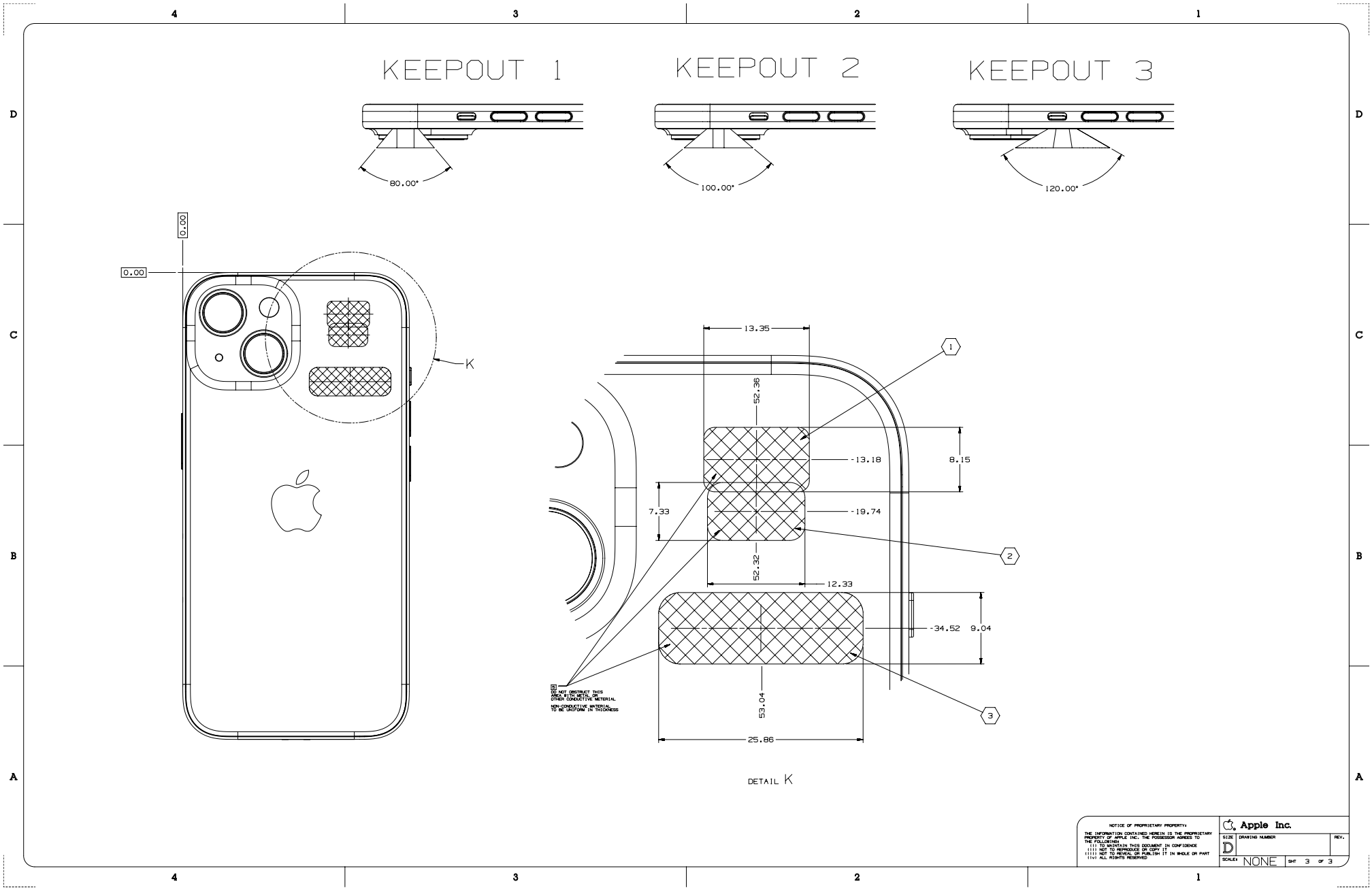
KEEPOUT 1
KEEPOUT 2
KEEPOUT 3
80.00°
100.00°
120.00°
0.00
0.00
K
13.35
52.36
13.18
8.15
7.33
19.74
52.32
12.33
34.52
9.04
53.04
25.86
1
2
3
DETAIL K
NOTICE OF PROPRIETARY PROPERTY:
Apple Inc.
SIZE
D
DRAWING NUMBER
REV.
SCALE: NONE
SHT 3 OF 3

NOTES: (UNLESS OTHERWISE SPECIFIED)

1. NO METAL CONTACT WITH iPHONE.
2. DO NOT OBSTRUCT PORTS.
3. DO NOT OBSTRUCT THE IMAGING FEATURES: FRONT CAMERA, REAR CAMERAS, REAR FLASH.
4. DO NOT OBSTRUCT FORWARD FACING SENSORS.
5. RELATIVE MAGNETIC PERMEABILITY OF ANY METAL USED ON CASE: 1.05 MAX, PER ASTM A342/A342M-14.
6. DO NOT TOUCH GLASS.
7. NO MAGNETS ON REAR OF PRODUCT EXCEPT MAGSAFE MAGNETS.
8. CASE THICKNESS ON BACKSIDE OF PRODUCT: 2.1 mm MAX TO ENSURE FULL FUNCTIONALITY.

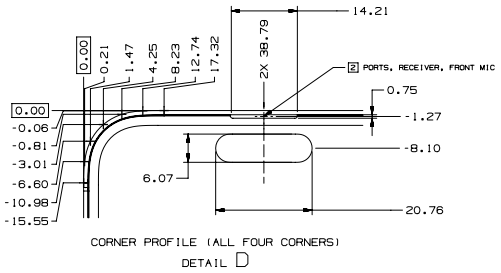

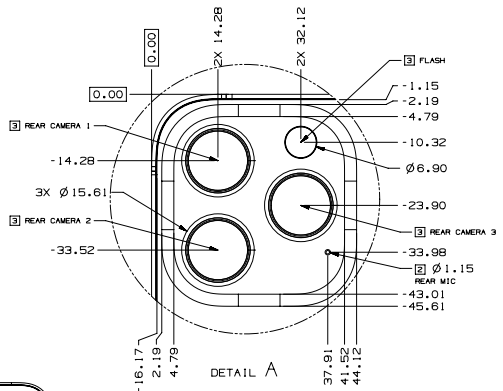

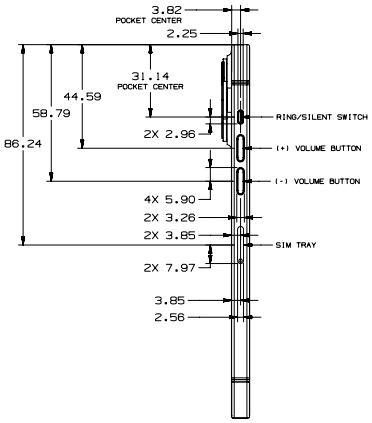

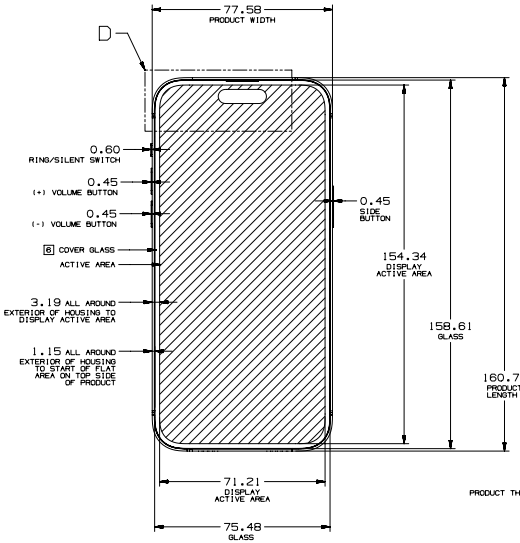

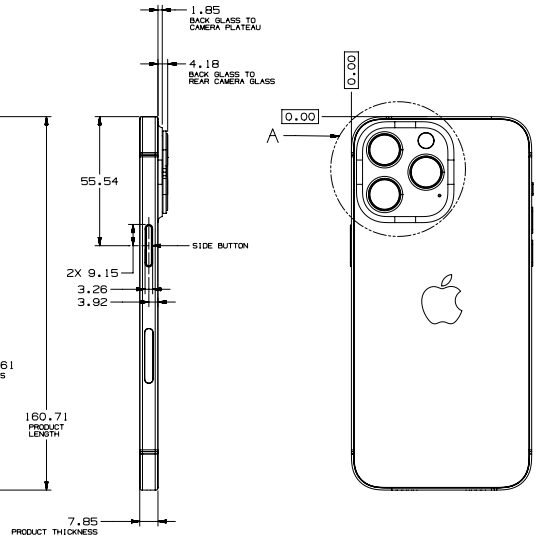

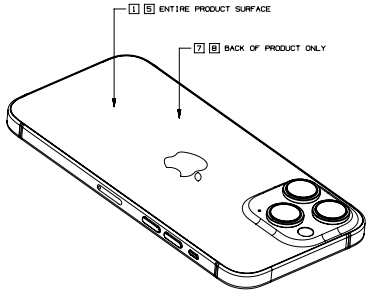

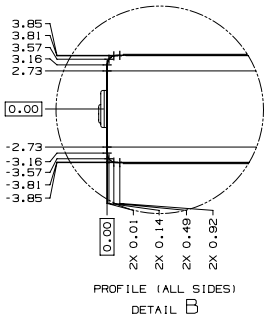

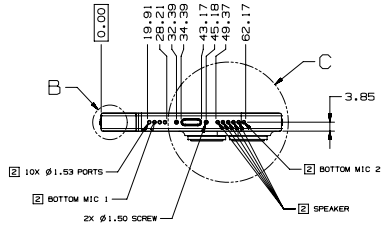

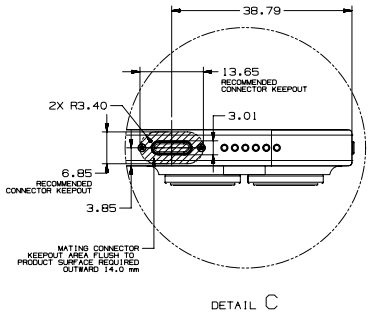

METRIC	Apple Inc.
DRAWTER / DATE	NOTICE OF PROPRIETARY PROPERTY: THE INFORMATION CONTAINED HEREIN IS THE PROPRIETARY PROPERTY OF APPLE INC. THE POSSESSOR AGREES TO THE FOLLOWING: (i) TO MAINTAIN THIS DOCUMENT IN CONFIDENCE (ii) NOT TO REPRODUCE OR COPY IT (iii) NOT TO REVEAL OR PUBLISH IT IN WHOLE OR PART (iv) ALL RIGHTS RESERVED
DESIGNER / DATE	
DIMENSIONS ARE IN MILLIMETERS TOLERANCES 0 < - < 2 ±0.05 2 < - < 10 ±0.08 10 < - < 50 ±0.10 50 < - < 100 ±0.20 100 < - < 200 ±0.30 200 < - ±0.40 ANGLES ±0.50° DO NOT SCALE DRAWING	TITLE: IPHONE 14 PRO MAX
THIRD ANGLE PROJECTION / SIZE D	DRAWING NUMBER / REV.
	SCALE NONE / SHT 1 OF 3

NX GENERATED

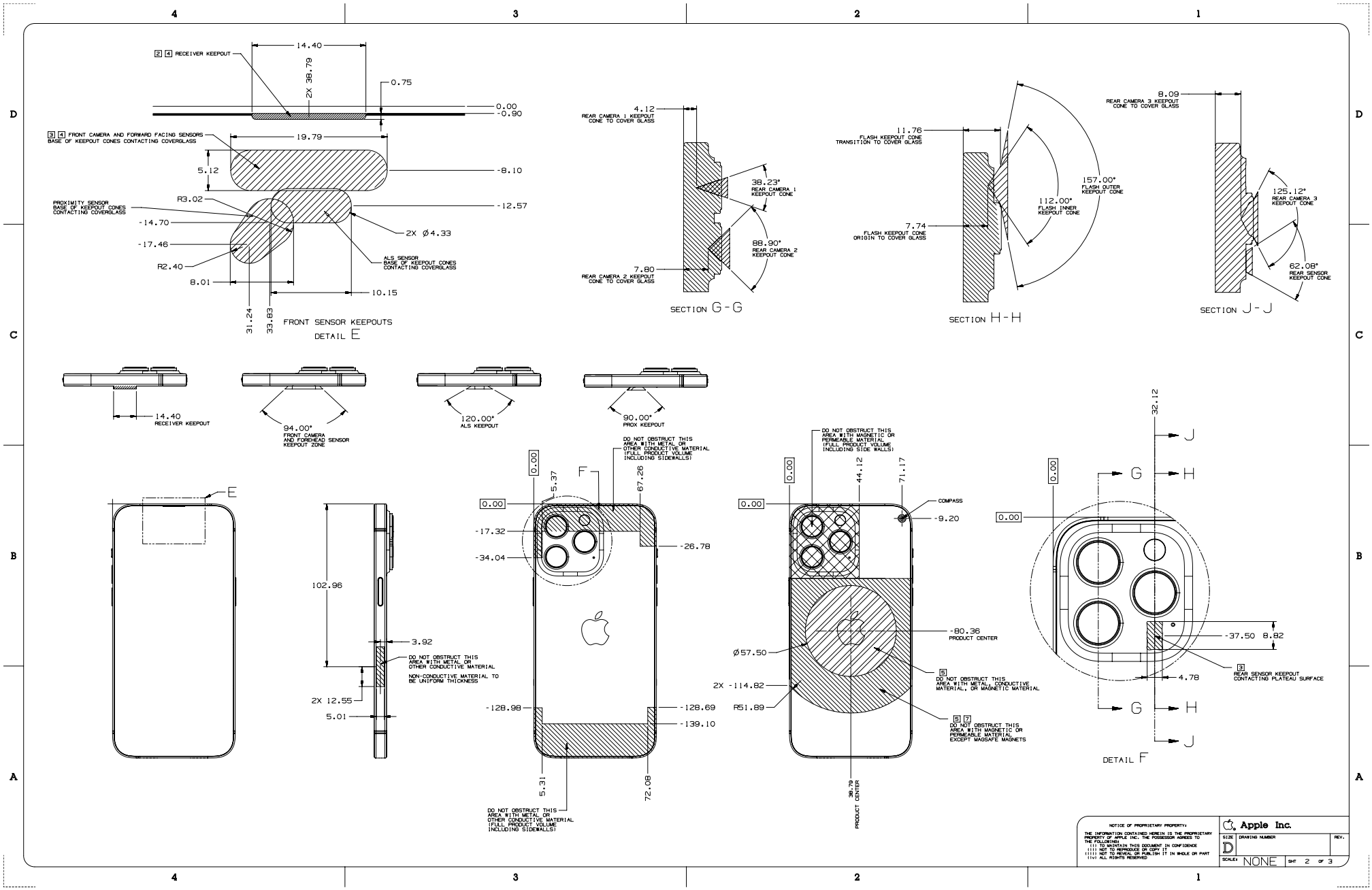
2 4 RECEIVER KEEPOUT
14.40
2X 38.79
0.75
0.00
-0.90
3 4 FRONT CAMERA AND FORWARD FACING SENSORS BASE OF KEEPOUT CONES CONTACTING COVERGLASS
19.79
5.12
-8.10
PROXIMITY SENSOR BASE OF KEEPOUT CONES CONTACTING COVERGLASS
R3.02
-14.70
-17.46
-12.57
2X Ø4.33
ALS SENSOR BASE OF KEEPOUT CONES CONTACTING COVERGLASS
R2.40
8.01
10.15
31.24
33.83
FRONT SENSOR KEEPOUTS
DETAIL E
4.12
REAR CAMERA 1 KEEPOUT CONE TO COVER GLASS
38.23°
REAR CAMERA 1 KEEPOUT CONE
88.90°
REAR CAMERA 2 KEEPOUT CONE
7.80
REAR CAMERA 2 KEEPOUT CONE TO COVER GLASS
SECTION G-G
11.76
FLASH KEEPOUT CONE TRANSITION TO COVER GLASS
157.00°
FLASH OUTER KEEPOUT CONE
112.00°
FLASH INNER KEEPOUT CONE
7.74
FLASH KEEPOUT CONE ORIGIN TO COVER GLASS
SECTION H-H
8.09
REAR CAMERA 3 KEEPOUT CONE TO COVER GLASS
125.12°
REAR CAMERA 3 KEEPOUT CONE
62.08°
REAR SENSOR KEEPOUT CONE
SECTION J-J
14.40
RECEIVER KEEPOUT
94.00°
FRONT CAMERA AND FOREHEAD SENSOR KEEPOUT ZONE
120.00°
ALS KEEPOUT
90.00°
PROX KEEPOUT
E
102.96
3.92
DO NOT OBSTRUCT THIS AREA WITH METAL OR OTHER CONDUCTIVE MATERIAL
NON-CONDUCTIVE MATERIAL TO BE UNIFORM THICKNESS
2X 12.55
5.01
F
0.00
5.37
67.26
DO NOT OBSTRUCT THIS AREA WITH METAL OR OTHER CONDUCTIVE MATERIAL (FULL PRODUCT VOLUME INCLUDING SIDEWALLS)
-17.32
-34.04
-26.78
-128.98
-128.69
-139.10
5.31
72.08
DO NOT OBSTRUCT THIS AREA WITH METAL OR OTHER CONDUCTIVE MATERIAL (FULL PRODUCT VOLUME INCLUDING SIDEWALLS)
DO NOT OBSTRUCT THIS AREA WITH MAGNETIC OR PERMEABLE MATERIAL (FULL PRODUCT VOLUME INCLUDING SIDE WALLS)
44.12
71.17
COMPASS
-9.20
-80.36
PRODUCT CENTER
Ø57.50
2X -114.82
R51.89
5 DO NOT OBSTRUCT THIS AREA WITH METAL, CONDUCTIVE MATERIAL, OR MAGNETIC MATERIAL
6 7 DO NOT OBSTRUCT THIS AREA WITH MAGNETIC OR PERMEABLE MATERIAL EXCEPT MAGSAFE MAGNETS
38.79
PRODUCT CENTER
32.12
J
G
H
-37.50
8.82
4.78
3 REAR SENSOR KEEPOUT CONTACTING PLATEAU SURFACE
DETAIL F
NOTICE OF PROPRIETARY PROPERTY:
THE INFORMATION CONTAINED HEREIN IS THE PROPRIETARY PROPERTY OF APPLE INC. THE POSSESSOR AGREES TO THE FOLLOWING:
(i) TO MAINTAIN THIS DOCUMENT IN CONFIDENCE
(ii) NOT TO REPRODUCE OR COPY IT
(iii) NOT TO REVEAL OR PUBLISH IT IN WHOLE OR PART
(iv) ALL RIGHTS RESERVED
Apple Inc.
SIZE D
DRAWING NUMBER
REV.
SCALE: NONE
SHT 2 OF 3

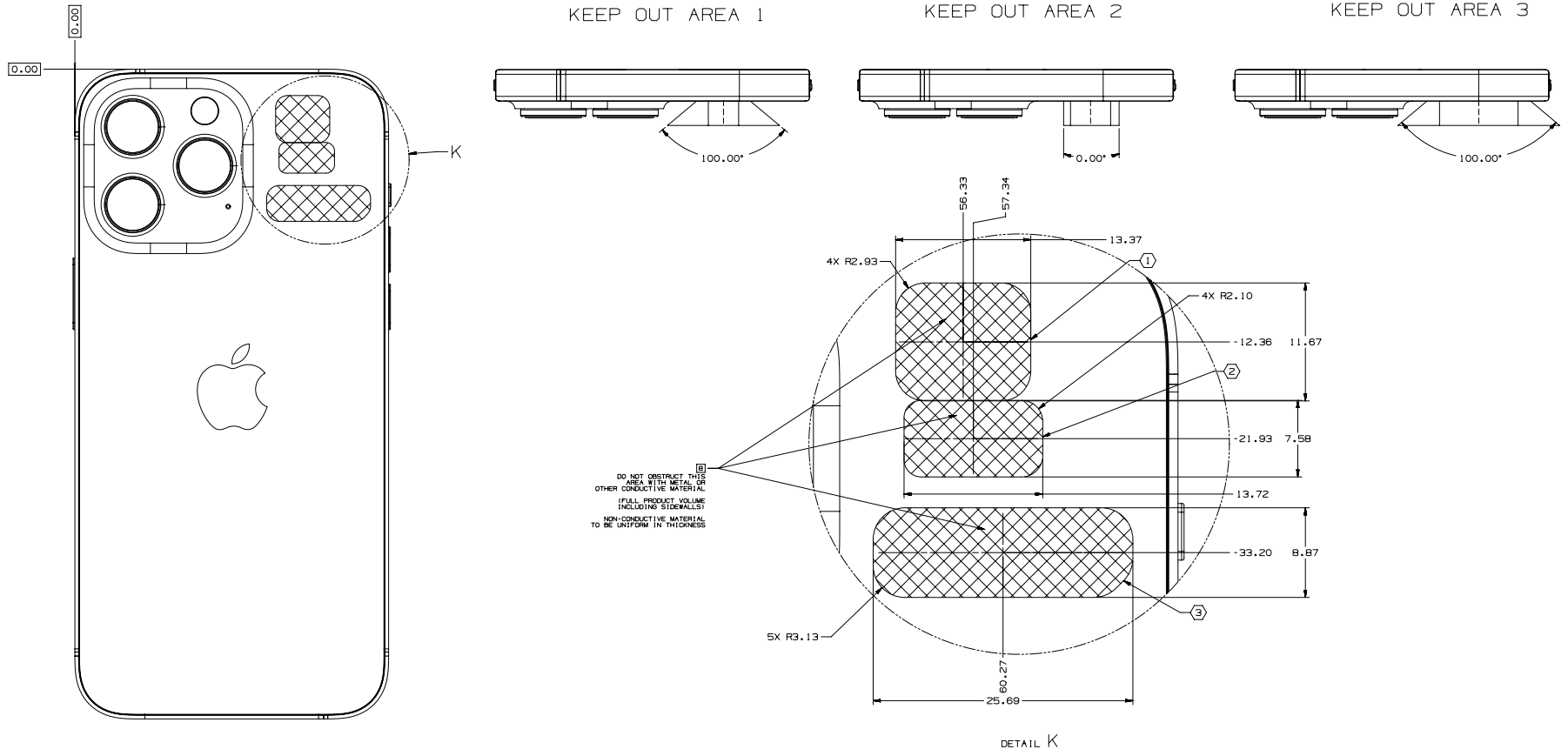
KEEP OUT AREA 1
KEEP OUT AREA 2
KEEP OUT AREA 3
0.00
0.00
K
100.00°
0.00°
100.00°
56.33
57.34
13.37
4X R2.93
4X R2.10
12.36
11.67
21.93
7.58
13.72
33.20
8.87
5X R3.13
60.27
25.69
DO NOT OBSTRUCT THIS AREA WITH METAL OR OTHER CONDUCTIVE MATERIAL
(FULL PRODUCT VOLUME INCLUDING SIDEWALLS)
NON-CONDUCTIVE MATERIAL TO BE UNIFORM IN THICKNESS
DETAIL K
NOTICE OF PROPRIETARY PROPERTY:
THE INFORMATION CONTAINED HEREIN IS THE PROPRIETARY PROPERTY OF APPLE INC. THE POSSESSOR AGREES TO THE FOLLOWING:
(i) TO MAINTAIN THIS DOCUMENT IN CONFIDENCE
(ii) NOT TO REPRODUCE OR COPY IT
(iii) NOT TO REVEAL OR PUBLISH IT IN WHOLE OR PART
(iv) ALL RIGHTS RESERVED
Apple Inc.
SIZE D
DRAWING NUMBER
REV.
SCALE: NONE
SHT 3 OF 3

NOTES: (UNLESS OTHERWISE SPECIFIED)

1. NO METAL CONTACT WITH iPHONE.
2. DO NOT OBSTRUCT PORTS.
3. DO NOT OBSTRUCT THE IMAGING FEATURES: FRONT CAMERA, REAR CAMERAS, REAR FLASH.
4. DO NOT OBSTRUCT FORWARD FACING SENSORS.
5. RELATIVE MAGNETIC PERMEABILITY OF ANY METAL USED ON CASE: 1.05 MAX, PER ASTM A342/A342M-14.
6. DO NOT TOUCH GLASS.
7. NO MAGNETS ON REAR OF PRODUCT EXCEPT MAGSAFE MAGNETS.
8. CASE THICKNESS ON BACKSIDE OF PRODUCT: 2.1 mm MAX TO ENSURE FULL FUNCTIONALITY.

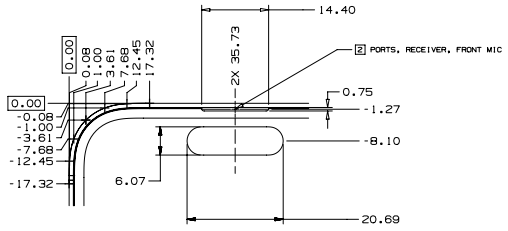

CORNER PROFILE (ALL FOUR CORNERS)
DETAIL A

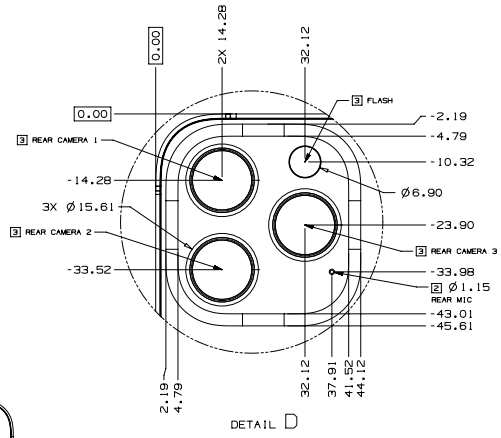

DETAIL D

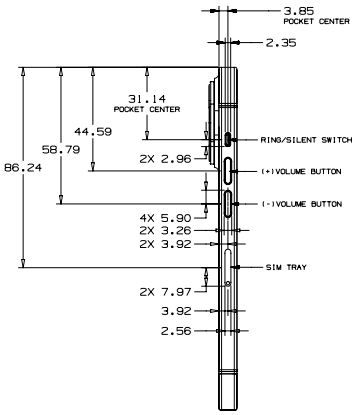

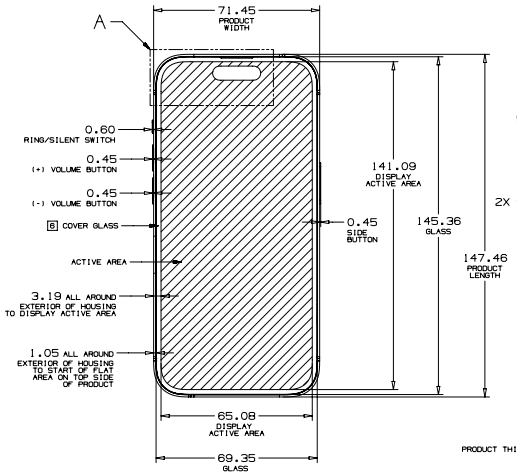

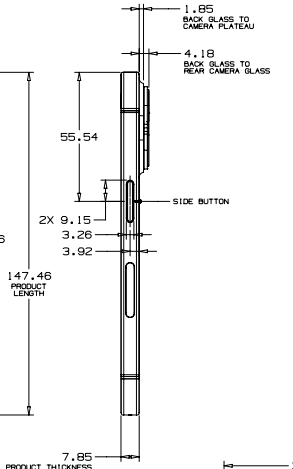

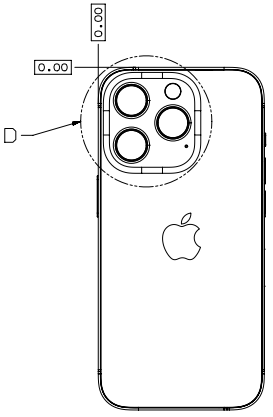

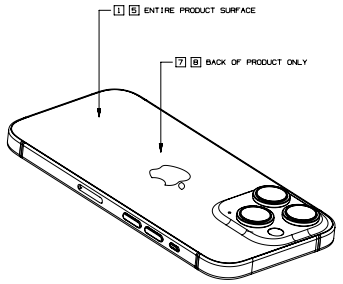

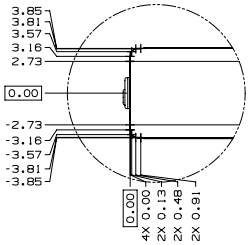

PROFILE (ALL SIDES)
DETAIL B

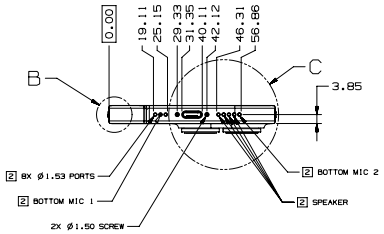

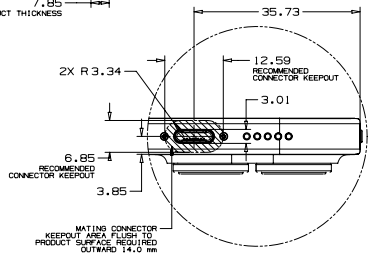

DETAIL C

METRIC	Apple Inc.
DRAWTER / DATE	NOTICE OF PROPRIETARY PROPERTY: THE INFORMATION CONTAINED HEREIN IS THE PROPRIETARY PROPERTY OF APPLE INC. THE POSSESSOR AGREES TO THE FOLLOWING: (i) TO MAINTAIN THIS DOCUMENT IN CONFIDENCE (ii) NOT TO REPRODUCE OR COPY IT (iii) NOT TO REVEAL OR PUBLISH IT IN WHOLE OR PART (iv) ALL RIGHTS RESERVED
DESIGNER / DATE	
DIMENSIONS ARE IN MILLIMETERS TOLERANCES 0 < - < 2 ±0.05 2 < - < 10 ±0.08 10 < - < 50 ±0.10 50 < - < 100 ±0.20 100 < - < 200 ±0.30 200 < - ±0.40 ANGLES ±0.50° DO NOT SCALE DRAWING	TITLE: IPHONE 14 PRO
THIRD ANGLE PROJECTION / SIZE D	DRAWING NUMBER / REV.
	SCALE NONE / SHT 1 OF 3

NX GENERATED

56.17 iPhone 14 Pro 2/3

[英语]

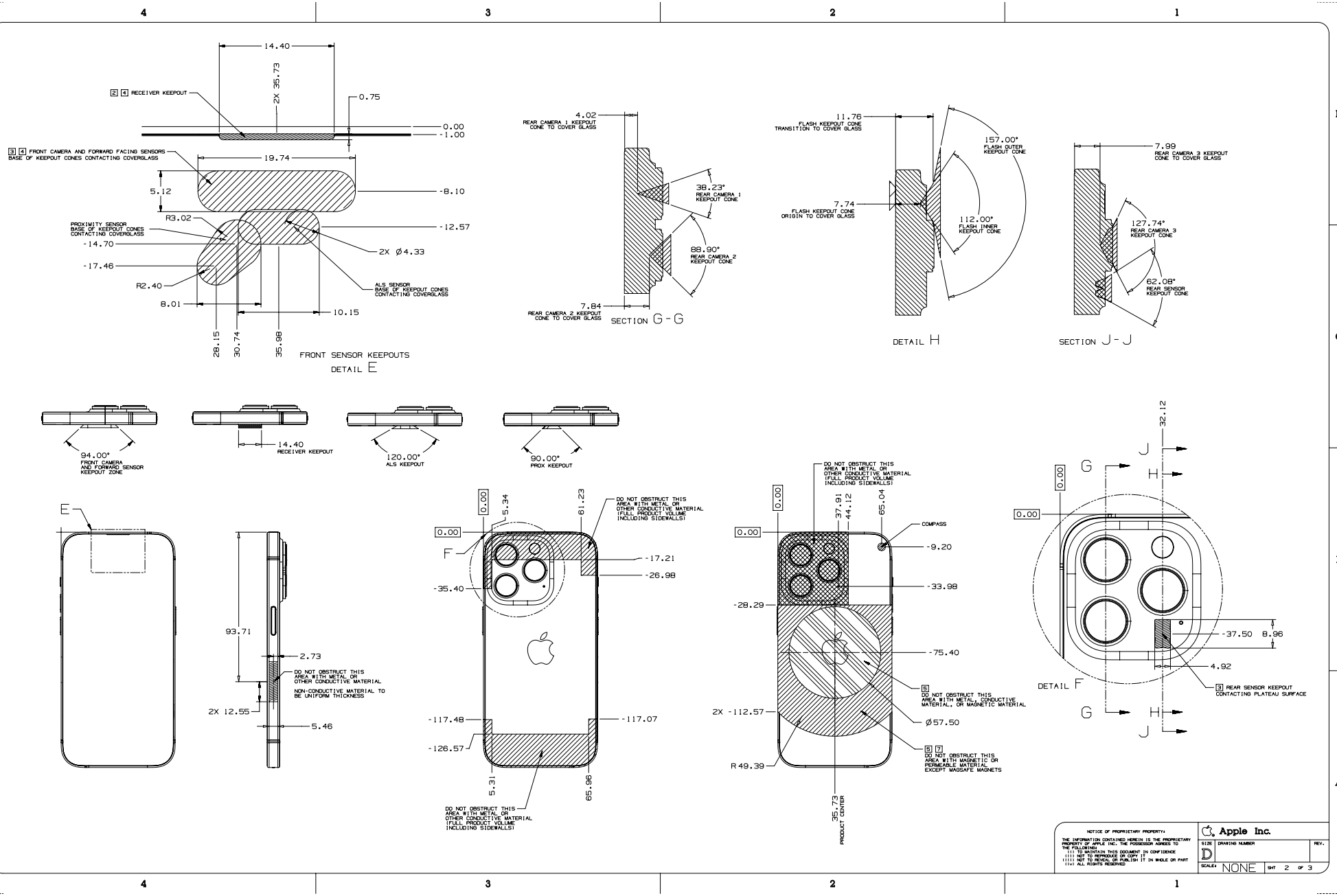

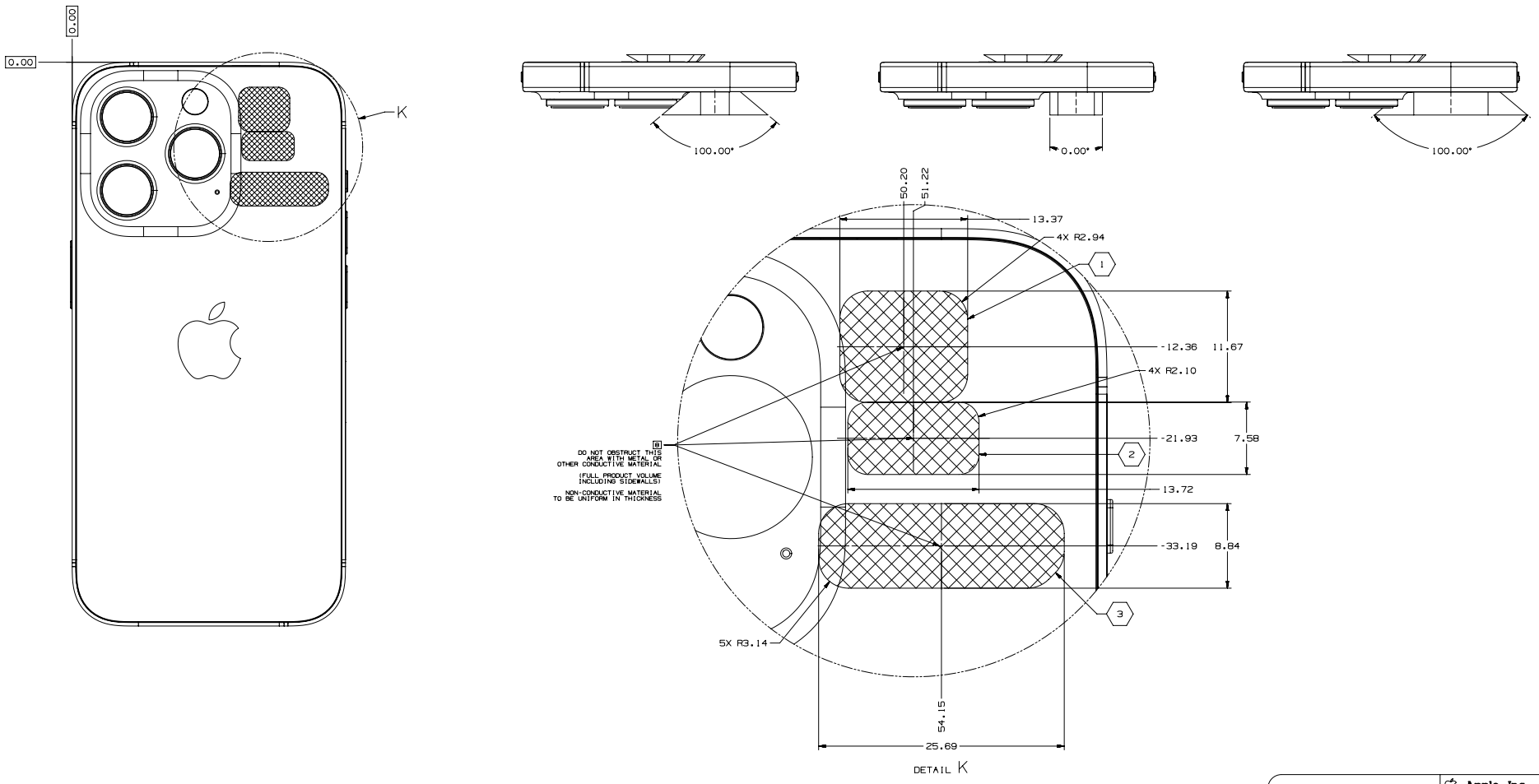
KEEP OUT AREA 1
KEEP OUT AREA 2
KEEP OUT AREA 3
0.00
0.00
K
100.00°
0.00°
100.00°
50.20
51.22
13.37
4X R2.94
1
-12.36
11.67
4X R2.10
-21.93
7.58
2
13.72
-33.19
8.84
3
5X R3.14
54.15
25.69
DETAIL K
6
DO NOT OBSTRUCT THIS AREA WITH METAL OR OTHER CONDUCTIVE MATERIAL
(FULL PRODUCT VOLUME INCLUDING SIDEWALLS)
NON-CONDUCTIVE MATERIAL TO BE UNIFORM IN THICKNESS
NOTICE OF PROPRIETARY PROPERTY:
THE INFORMATION CONTAINED HEREIN IS THE PROPRIETARY PROPERTY OF APPLE INC. THE POSSESSOR AGREES TO THE FOLLOWING:
(i) TO MAINTAIN THIS DOCUMENT IN CONFIDENCE
(ii) NOT TO REPRODUCE OR COPY IT
(iii) NOT TO REVEAL OR PUBLISH IT IN WHOLE OR PART
(iv) ALL RIGHTS RESERVED
Apple Inc.
SIZE D
DRAWING NUMBER
REV.
SCALE: NONE
SHT 3 OF 3

NOTES: (UNLESS OTHERWISE SPECIFIED)

1. NO METAL CONTACT WITH iPHONE.
2. DO NOT OBSTRUCT PORTS.
3. DO NOT OBSTRUCT THE IMAGING FEATURES: FRONT CAMERA, REAR CAMERAS, REAR FLASH.
4. DO NOT OBSTRUCT FORWARD FACING SENSORS.
5. RELATIVE MAGNETIC PERMEABILITY OF ANY METAL USED ON CASE: 1.05 MAX, PER ASTM A342/A342M-14.
6. DO NOT TOUCH GLASS.
7. NO MAGNETS ON REAR OF PRODUCT EXCEPT MAGSAFE MAGNETS.
8. CASE THICKNESS ON BACKSIDE OF PRODUCT: 2.1 mm MAX TO ENSURE FULL FUNCTIONALITY.

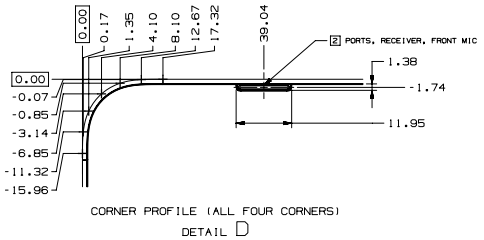

CORNER PROFILE (ALL FOUR CORNERS)
DETAIL D

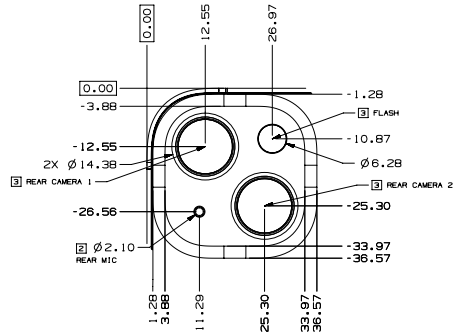

DETAIL A

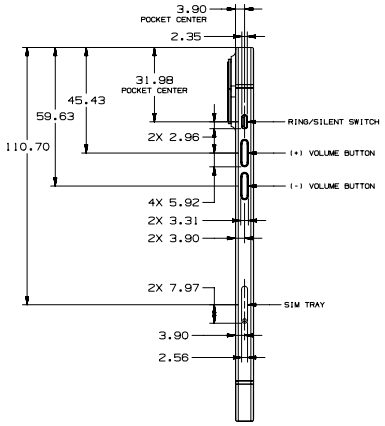

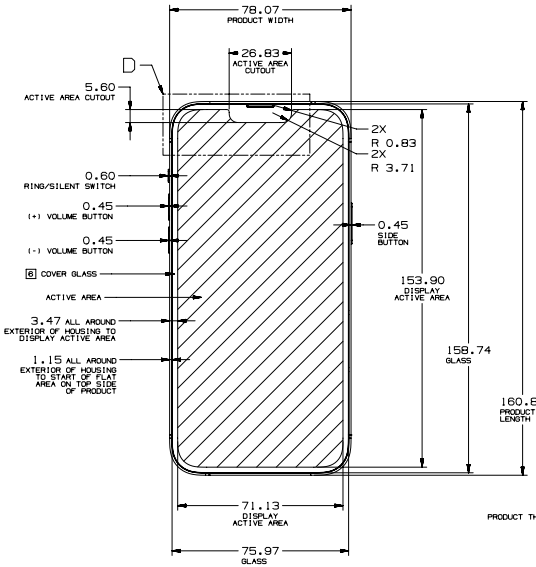

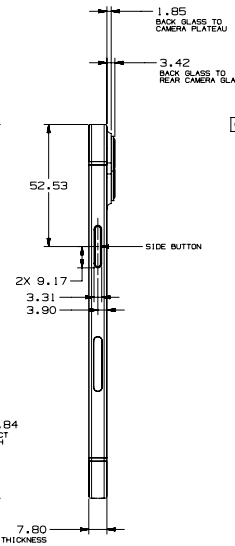

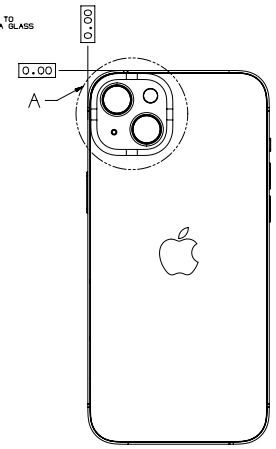

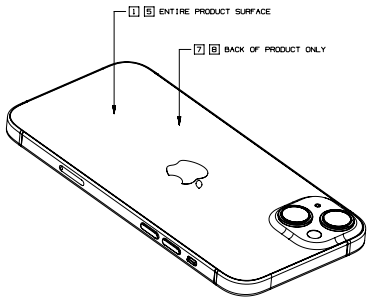

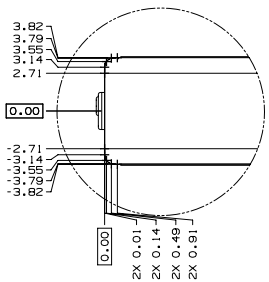

DETAIL B

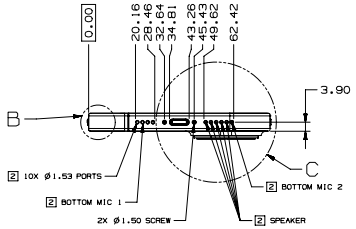

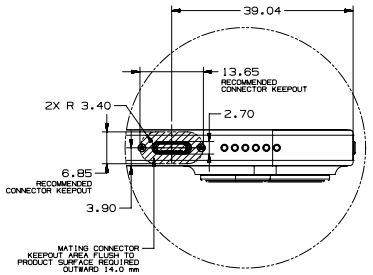

DETAIL C

METRIC	Apple Inc.
DRAFTER / DATE	NOTICE OF PROPRIETARY PROPERTY: THE INFORMATION CONTAINED HEREIN IS THE PROPRIETARY PROPERTY OF APPLE INC. THE POSSESSOR AGREES TO THE FOLLOWING: (i) TO MAINTAIN THIS DOCUMENT IN CONFIDENCE (ii) NOT TO REPRODUCE OR COPY IT (iii) NOT TO REVEAL OR PUBLISH IT IN WHOLE OR PART (iv) ALL RIGHTS RESERVED
DESIGNER / DATE	
DIMENSIONS ARE IN MILLIMETERS. TOLERANCES: 0 < - < 2 ±0.05; 2 < - < 10 ±0.08; 10 < - < 50 ±0.10; 50 < - < 100 ±0.20; 100 < - < 200 ±0.30; 200 < - ±0.40; ANGLES ±0.50°. DO NOT SCALE DRAWING	TITLE: IPHONE 14 PLUS
THIRD ANGLE PROJECTION	DRAWING NUMBER / REV.
SIZE D	SCALE NONE
	SHT 1 OF 3

NX GENERATED

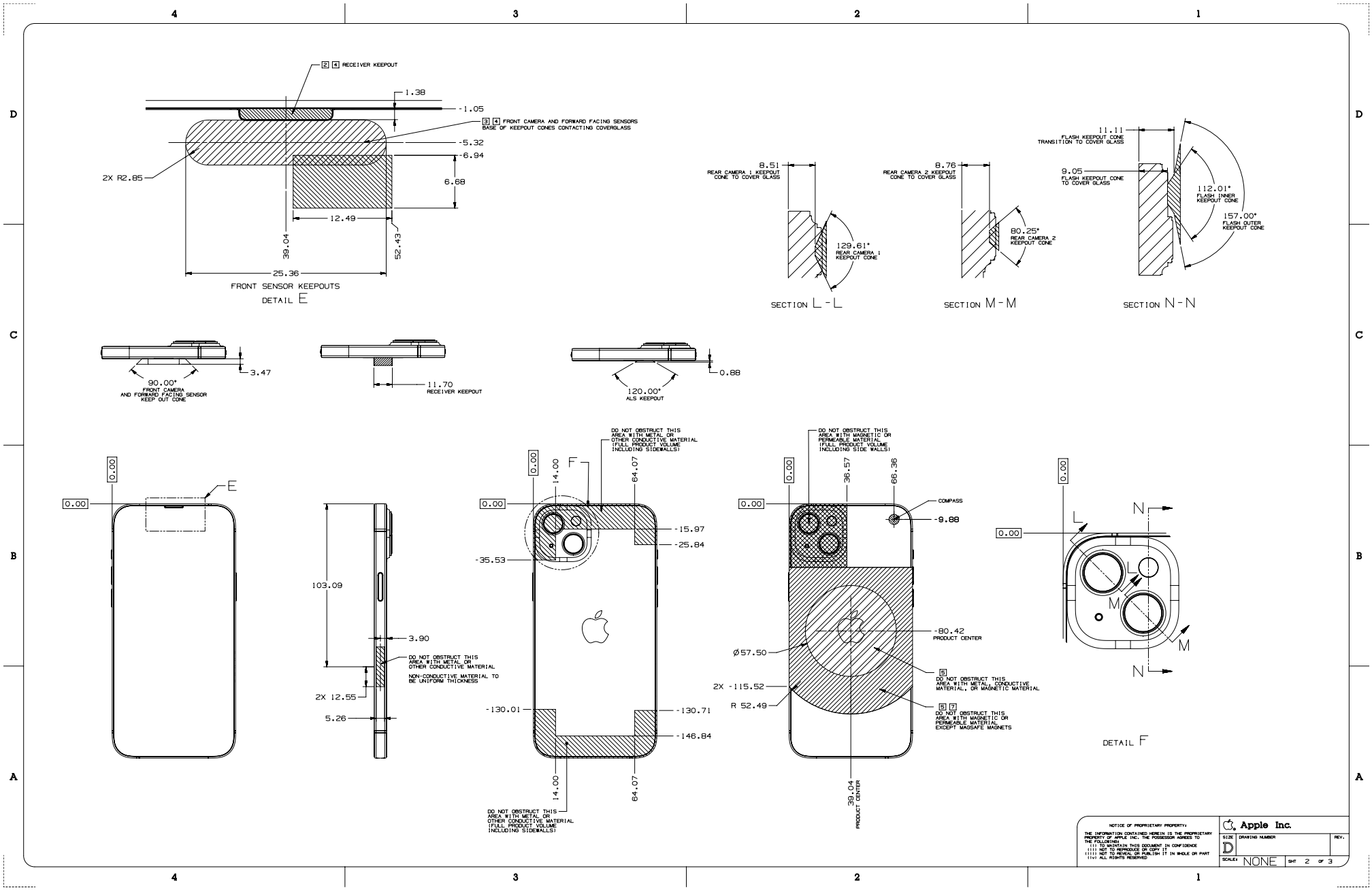
[2] [4] RECEIVER KEEPOUT
[3] [4] FRONT CAMERA AND FORWARD FACING SENSORS BASE OF KEEPOUT CONES CONTACTING COVERGLASS
1.38
-1.05
-5.32
-6.94
6.68
2X R2.85
12.49
39.04
52.43
25.36
FRONT SENSOR KEEPOUTS
DETAIL E
8.51
REAR CAMERA 1 KEEPOUT CONE TO COVER GLASS
129.61°
REAR CAMERA 1 KEEPOUT CONE
SECTION L-L
8.76
REAR CAMERA 2 KEEPOUT CONE TO COVER GLASS
80.25°
REAR CAMERA 2 KEEPOUT CONE
SECTION M-M
11.11
FLASH KEEPOUT CONE TRANSITION TO COVER GLASS
9.05
FLASH KEEPOUT CONE TO COVER GLASS
112.01°
FLASH INNER KEEPOUT CONE
157.00°
FLASH OUTER KEEPOUT CONE
SECTION N-N
3.47
90.00°
FRONT CAMERA AND FORWARD FACING SENSOR KEEP OUT CONE
11.70
RECEIVER KEEPOUT
0.88
120.00°
ALS KEEPOUT
0.00
E
103.09
3.90
DO NOT OBSTRUCT THIS AREA WITH METAL OR OTHER CONDUCTIVE MATERIAL
NON-CONDUCTIVE MATERIAL TO BE UNIFORM THICKNESS
2X 12.55
5.26
DO NOT OBSTRUCT THIS AREA WITH METAL OR OTHER CONDUCTIVE MATERIAL (FULL PRODUCT VOLUME INCLUDING SIDEWALLS)
14.00
F
64.07
-15.97
-25.84
-35.53
-130.01
-130.71
-146.84
DO NOT OBSTRUCT THIS AREA WITH MAGNETIC OR PERMEABLE MATERIAL (FULL PRODUCT VOLUME INCLUDING SIDE WALLS)
36.57
66.36
COMPASS
-9.88
-80.42
PRODUCT CENTER
Ø57.50
2X -115.52
R 52.49
[5] DO NOT OBSTRUCT THIS AREA WITH METAL, CONDUCTIVE MATERIAL, OR MAGNETIC MATERIAL
[5] [7] DO NOT OBSTRUCT THIS AREA WITH MAGNETIC OR PERMEABLE MATERIAL EXCEPT MAGSAFE MAGNETS
39.04
PRODUCT CENTER
N
L
M
DETAIL F
NOTICE OF PROPRIETARY PROPERTY:
THE INFORMATION CONTAINED HEREIN IS THE PROPRIETARY PROPERTY OF APPLE INC. THE POSSESSOR AGREES TO THE FOLLOWING:
(i) TO MAINTAIN THIS DOCUMENT IN CONFIDENCE
(ii) NOT TO REPRODUCE OR COPY IT
(iii) NOT TO REVEAL OR PUBLISH IT IN WHOLE OR PART
(iv) ALL RIGHTS RESERVED
Apple Inc.
SIZE D
DRAWING NUMBER
REV.
SCALE: NONE
SHT 2 OF 3

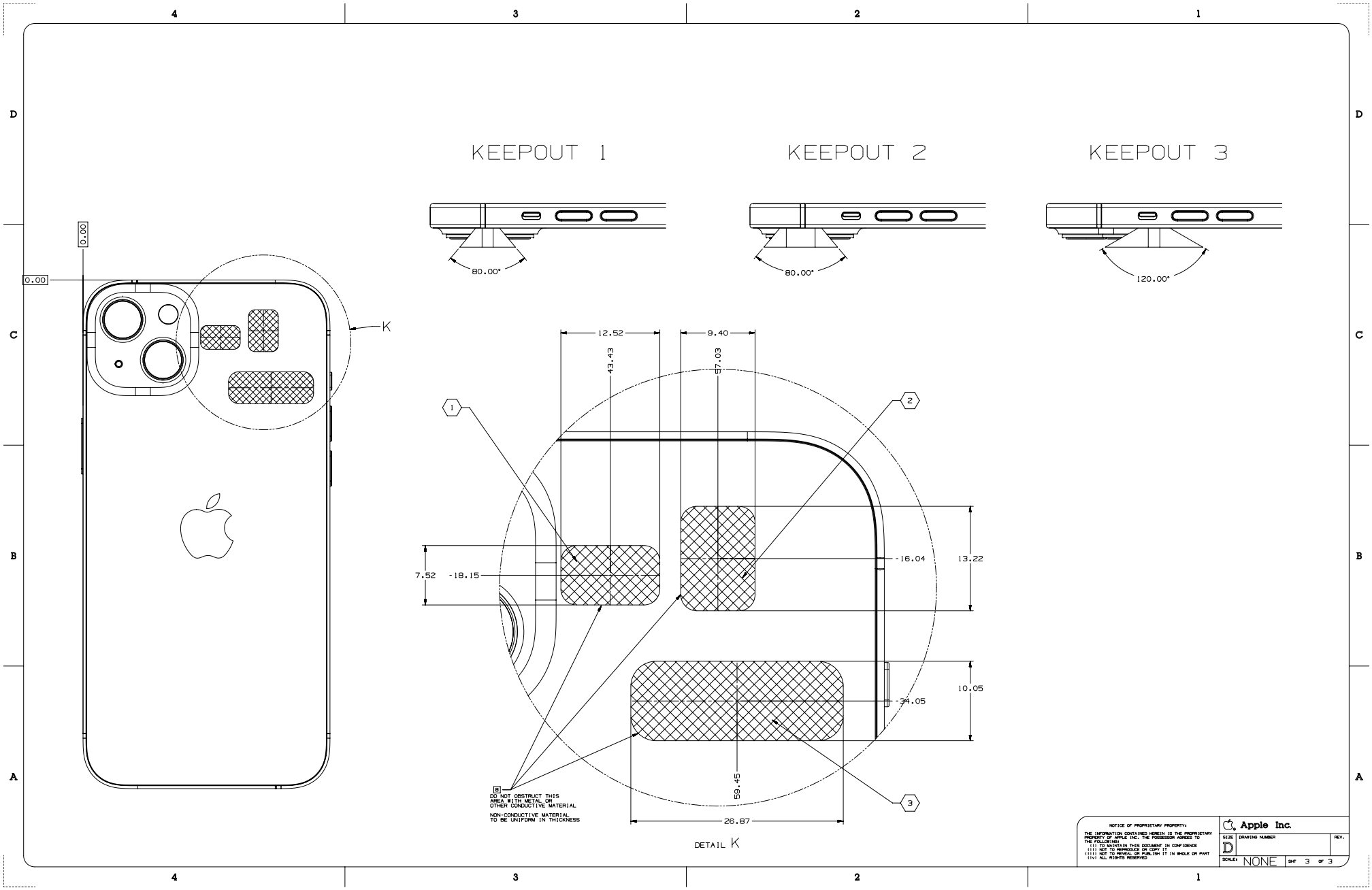
KEEPOUT 1
KEEPOUT 2
KEEPOUT 3
80.00°
80.00°
120.00°
0.00
0.00
K
12.52
9.40
43.43
47.03
1
2
7.52
18.15
16.04
13.22
34.05
10.05
59.45
26.87
3
6
DO NOT OBSTRUCT THIS AREA WITH METAL OR OTHER CONDUCTIVE MATERIAL
NON-CONDUCTIVE MATERIAL TO BE UNIFORM IN THICKNESS
DETAIL K
NOTICE OF PROPRIETARY PROPERTY:
THE INFORMATION CONTAINED HEREIN IS THE PROPRIETARY PROPERTY OF APPLE INC. THE POSSESSOR AGREES TO THE FOLLOWING:
(i) TO MAINTAIN THIS DOCUMENT IN CONFIDENCE
(ii) NOT TO REPRODUCE OR COPY IT
(iii) NOT TO REVEAL OR PUBLISH IT IN WHOLE OR PART
(iv) ALL RIGHTS RESERVED
Apple Inc.
SIZE D
DRAWING NUMBER
REV.
SCALE: NONE
SHT 3 OF 3

NOTES: (UNLESS OTHERWISE SPECIFIED)

1. NO METAL CONTACT WITH iPHONE.
2. DO NOT OBSTRUCT PORTS.
3. DO NOT OBSTRUCT THE IMAGING FEATURES: FRONT CAMERA, REAR CAMERAS, REAR FLASH.
4. DO NOT OBSTRUCT FORWARD FACING SENSORS.
5. RELATIVE MAGNETIC PERMEABILITY OF ANY METAL USED ON CASE: 1.05 MAX, PER ASTM A342/A342M-14.
6. DO NOT TOUCH GLASS.
7. NO MAGNETS ON REAR OF PRODUCT EXCEPT MAGSAFE MAGNETS.
8. CASE THICKNESS ON BACKSIDE OF PRODUCT: 2.1 mm MAX TO ENSURE FULL FUNCTIONALITY.

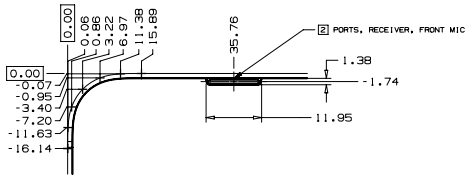

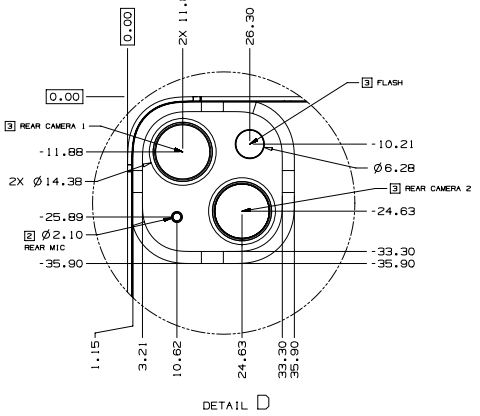

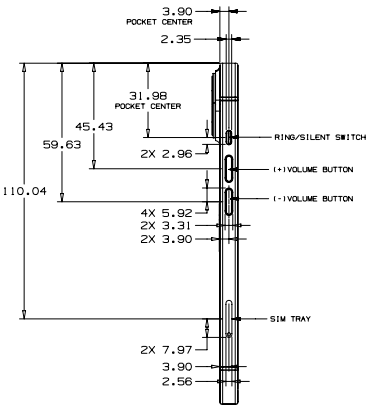

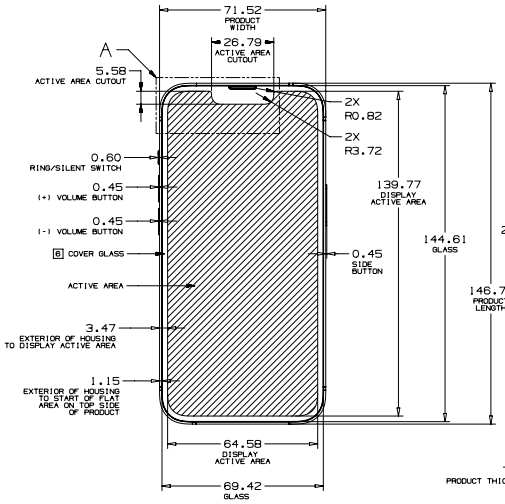

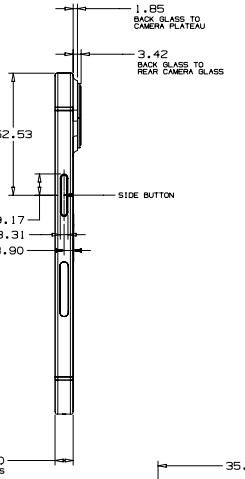

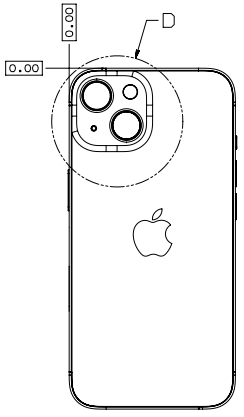

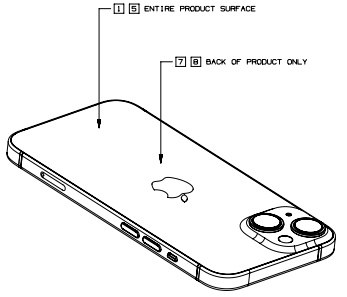

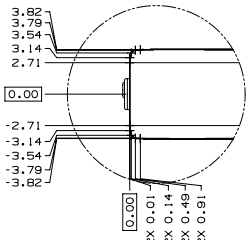

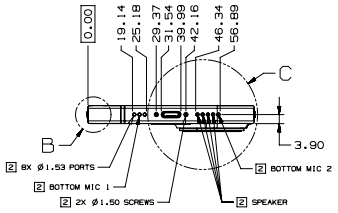

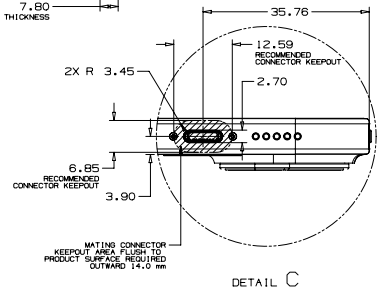

METRIC	Apple Inc.
DRAWTER / DESIGNER	NOTICE OF PROPRIETARY PROPERTY: THE INFORMATION CONTAINED HEREIN IS THE PROPRIETARY PROPERTY OF APPLE INC. THE POSSESSOR AGREES TO THE FOLLOWING: (i) TO MAINTAIN THIS DOCUMENT IN CONFIDENCE (ii) NOT TO REPRODUCE OR COPY IT (iii) NOT TO REVEAL OR PUBLISH IT IN WHOLE OR PART (iv) ALL RIGHTS RESERVED
DIMENSIONS ARE IN MILLIMETERS. TOLERANCES: 0 < - < 2 ±0.05; 2 < - < 10 ±0.08; 10 < - < 50 ±0.10; 50 < - < 100 ±0.20; 100 < - < 200 ±0.30; 200 < - ±0.40; ANGLES ±0.50°. DO NOT SCALE DRAWING	TITLE: IPHONE 14
THIRD ANGLE PROJECTION; SIZE D	DRAWING NUMBER; REV.; SCALE NONE; SHT 1 OF 3

NX GENERATED

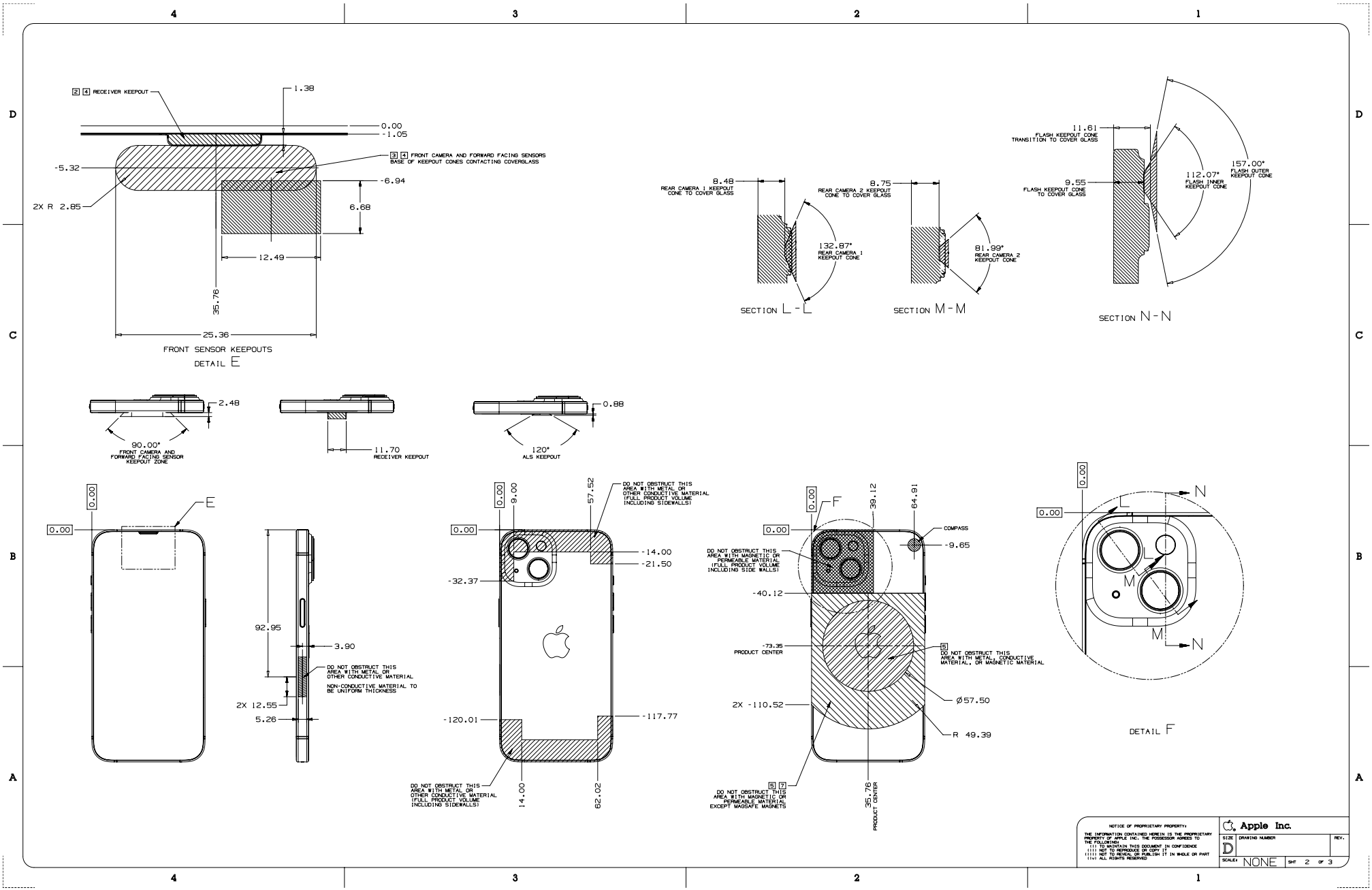
[2] [4] RECEIVER KEEPOUT
1.38
0.00
-1.05
[3] [4] FRONT CAMERA AND FORWARD FACING SENSORS BASE OF KEEPOUT CONES CONTACTING COVERGLASS
-5.32
-6.94
2X R 2.85
6.68
12.49
35.76
25.36
FRONT SENSOR KEEPOUTS
DETAIL E
8.48
REAR CAMERA 1 KEEPOUT CONE TO COVER GLASS
132.87°
REAR CAMERA 1 KEEPOUT CONE
SECTION L - L
8.75
REAR CAMERA 2 KEEPOUT CONE TO COVER GLASS
81.99°
REAR CAMERA 2 KEEPOUT CONE
SECTION M - M
11.61
FLASH KEEPOUT CONE TRANSITION TO COVER GLASS
9.55
FLASH KEEPOUT CONE TO COVER GLASS
112.07°
FLASH INNER KEEPOUT CONE
157.00°
FLASH OUTER KEEPOUT CONE
SECTION N-N
2.48
90.00°
FRONT CAMERA AND FORWARD FACING SENSOR KEEPOUT ZONE
11.70
RECEIVER KEEPOUT
0.88
120°
ALS KEEPOUT
0.00
E
92.95
3.90
DO NOT OBSTRUCT THIS AREA WITH METAL OR OTHER CONDUCTIVE MATERIAL
NON-CONDUCTIVE MATERIAL TO BE UNIFORM THICKNESS
2X 12.55
5.26
9.00
57.52
DO NOT OBSTRUCT THIS AREA WITH METAL OR OTHER CONDUCTIVE MATERIAL (FULL PRODUCT VOLUME INCLUDING SIDEWALLS)
-14.00
-21.50
-32.37
-120.01
-117.77
DO NOT OBSTRUCT THIS AREA WITH METAL OR OTHER CONDUCTIVE MATERIAL (FULL PRODUCT VOLUME INCLUDING SIDEWALLS)
14.00
62.02
F
39.12
64.91
COMPASS
-9.65
DO NOT OBSTRUCT THIS AREA WITH MAGNETIC OR PERMEABLE MATERIAL (FULL PRODUCT VOLUME INCLUDING SIDE WALLS)
-40.12
-73.35
PRODUCT CENTER
[5] DO NOT OBSTRUCT THIS AREA WITH METAL, CONDUCTIVE MATERIAL, OR MAGNETIC MATERIAL
2X -110.52
Ø57.50
R 49.39
[5] [7] DO NOT OBSTRUCT THIS AREA WITH MAGNETIC OR PERMEABLE MATERIAL EXCEPT MAGSAFE MAGNETS
35.76
PRODUCT CENTER
L
N
M
DETAIL F
NOTICE OF PROPRIETARY PROPERTY:
THE INFORMATION CONTAINED HEREIN IS THE PROPRIETARY PROPERTY OF APPLE INC. THE POSSESSOR AGREES TO THE FOLLOWING:
(i) TO MAINTAIN THIS DOCUMENT IN CONFIDENCE
(ii) NOT TO REPRODUCE OR COPY IT
(iii) NOT TO REVEAL OR PUBLISH IT IN WHOLE OR PART
(iv) ALL RIGHTS RESERVED
Apple Inc.
SIZE D
DRAWING NUMBER
REV.
SCALE: NONE
SHT 2 OF 3

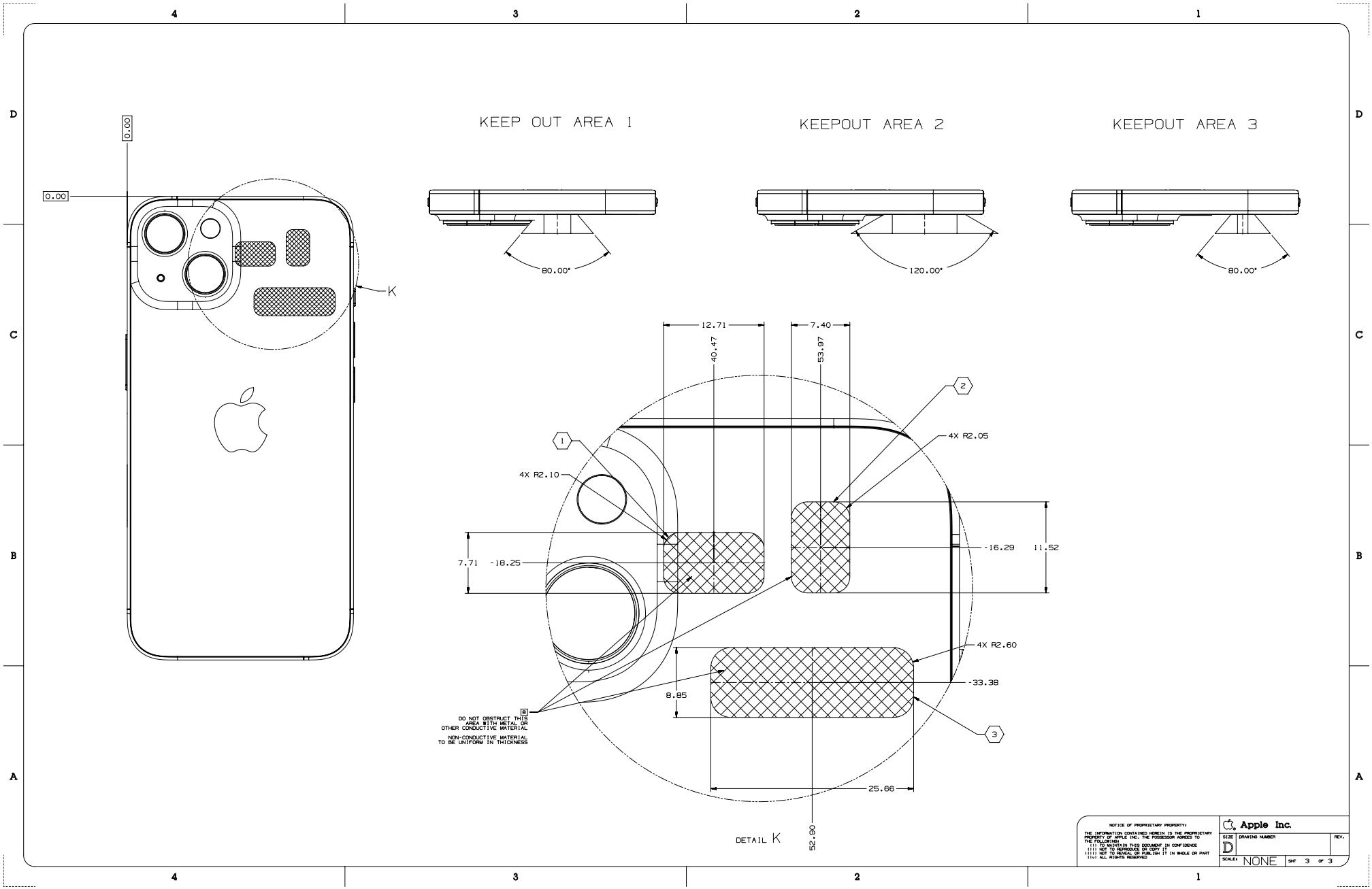
KEEP OUT AREA 1
KEEPOUT AREA 2
KEEPOUT AREA 3
0.00
0.00
K
80.00°
120.00°
80.00°
12.71
7.40
40.47
53.97
2
1
4X R2.05
4X R2.10
7.71
18.25
16.29
11.52
4X R2.60
33.38
8.85
B
DO NOT OBSTRUCT THIS AREA WITH METAL OR OTHER CONDUCTIVE MATERIAL
NON-CONDUCTIVE MATERIAL TO BE UNIFORM IN THICKNESS
3
25.66
52.90
DETAIL K
NOTICE OF PROPRIETARY PROPERTY:
THE INFORMATION CONTAINED HEREIN IS THE PROPRIETARY PROPERTY OF APPLE INC. THE POSSESSOR AGREES TO THE FOLLOWING:
(i) TO MAINTAIN THIS DOCUMENT IN CONFIDENCE
(ii) NOT TO REPRODUCE OR COPY IT
(iii) NOT TO REVEAL OR PUBLISH IT IN WHOLE OR PART
(iv) ALL RIGHTS RESERVED
Apple Inc.
SIZE D
DRAWING NUMBER
REV.
SCALE: NONE
SHT 3 OF 3

NOTES: (UNLESS OTHERWISE SPECIFIED)

1. NO METAL CONTACT WITH IPHONE.
2. DO NOT OBSTRUCT PORTS.
3. DO NOT OBSTRUCT THE IMAGING FEATURES: FRONT CAMERA, REAR CAMERAS, REAR FLASH.
4. DO NOT OBSTRUCT FORWARD FACING SENSORS.
5. RELATIVE MAGNETIC PERMEABILITY OF ANY METAL USED ON CASE: 1.05 MAX, PER ASTM A342/A342M-14.
6. DO NOT TOUCH GLASS.
7. NO MAGNETS ON REAR OF PRODUCT EXCEPT MAGSAFE MAGNETS.
8. CASE THICKNESS ON BACKSIDE OF PRODUCT: 2.1 mm MAX TO ENSURE FULL FUNCTIONALITY.

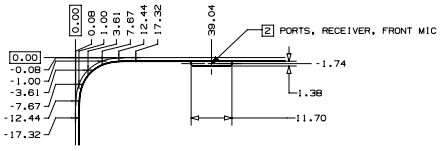

CORNER PROFILE (ALL FOUR CORNERS)
DETAIL A

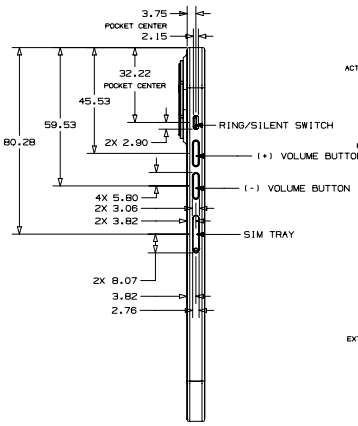

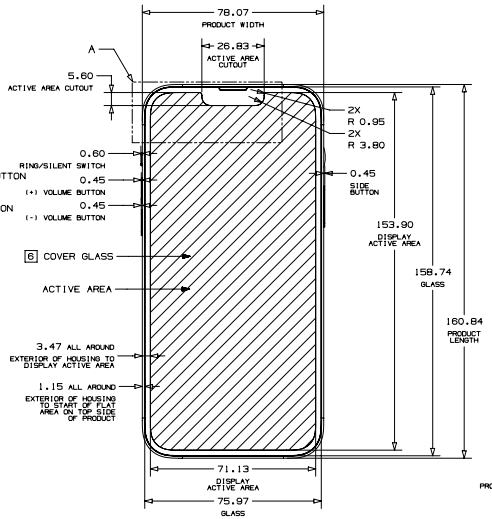

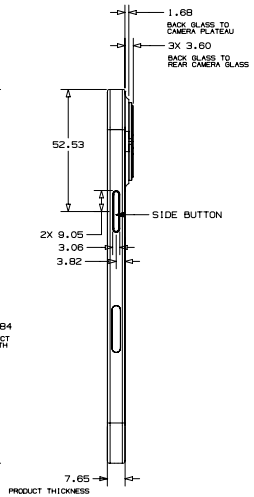

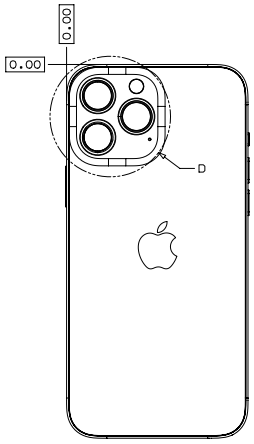

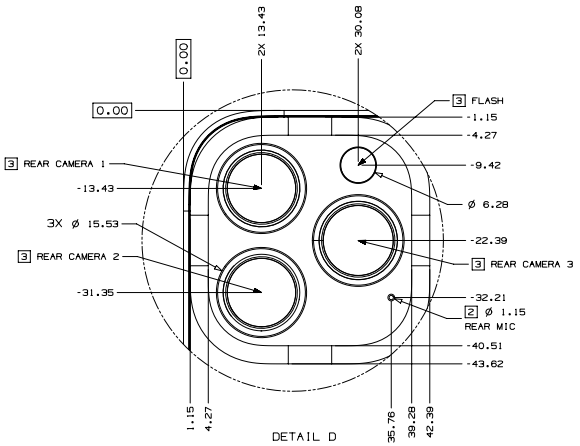

DETAIL D

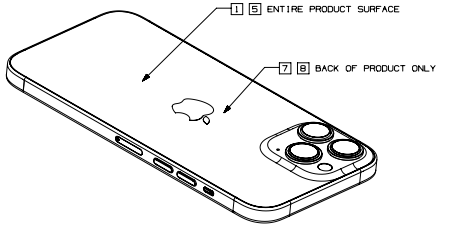

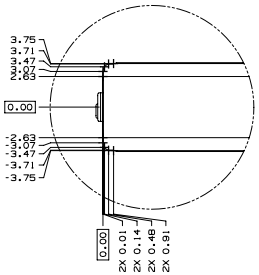

PROFILE (ALL SIDES)
DETAIL B

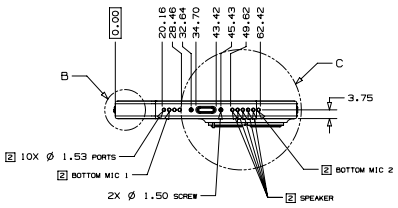

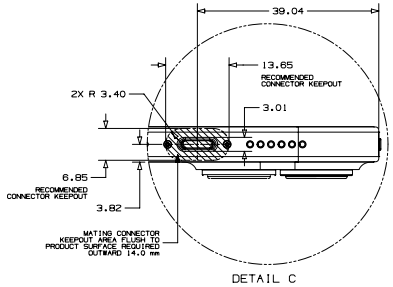

DETAIL C

METRIC	Apple Inc.
DRAWTER / DATE	NOTICE OF PROPRIETARY PROPERTY: THE INFORMATION CONTAINED HEREIN IS THE PROPRIETARY PROPERTY OF APPLE INC. THE POSSESSOR AGREES TO THE FOLLOWING: (i) TO MAINTAIN THIS DOCUMENT IN CONFIDENCE (ii) NOT TO REPRODUCE OR COPY IT (iii) NOT TO REVEAL OR PUBLISH IT IN WHOLE OR PART (iv) ALL RIGHTS RESERVED
DESIGNER / DATE	
0 < - < 2 ±0.05 2 < - < 10 ±0.08 10 < - < 50 ±0.10 50 < - < 100 ±0.20 100 < - < 200 ±0.30 200 < - ±0.40 ANGLES ±0.50°	TITLE: iPhone 13 Pro Max
THIRD ANGLE PROJECTION	DRAWING NUMBER / REV. / SIZE D / SCALE NONE / SHT 1 OF 2

NX GENERATED

56.26 iPhone 13 Pro Max 2/2

[英语]

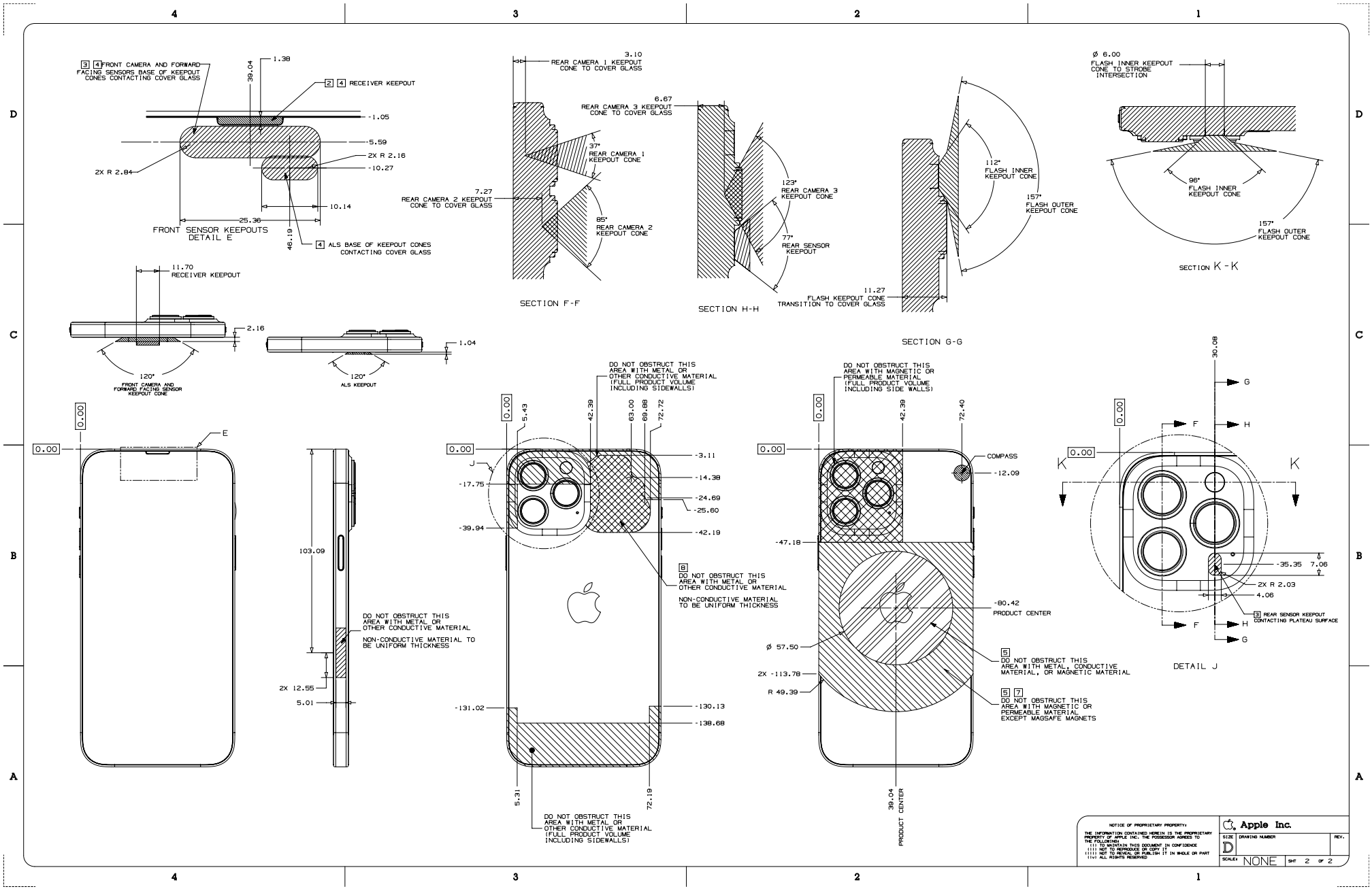

NOTES: (UNLESS OTHERWISE SPECIFIED)

1. NO METAL CONTACT WITH IPHONE.
2. DO NOT OBSTRUCT PORTS.
3. DO NOT OBSTRUCT THE IMAGING FEATURES: FRONT CAMERA, REAR CAMERAS, REAR FLASH.
4. DO NOT OBSTRUCT FORWARD FACING SENSORS.
5. RELATIVE MAGNETIC PERMEABILITY OF ANY METAL USED ON CASE: 1.05 MAX, PER ASTM A342/A342M-14.
6. DO NOT TOUCH GLASS.
7. NO MAGNETS ON REAR OF PRODUCT EXCEPT MAGSAFE MAGNETS.
8. CASE THICKNESS ON BACKSIDE OF PRODUCT: 2.1 mm MAX TO ENSURE FULL FUNCTIONALITY.

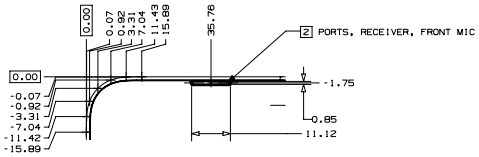

CORNER PROFILE (ALL FOUR CORNERS)
DETAIL A

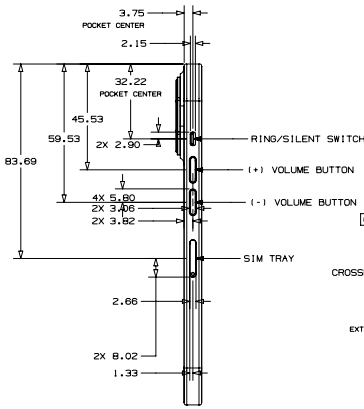

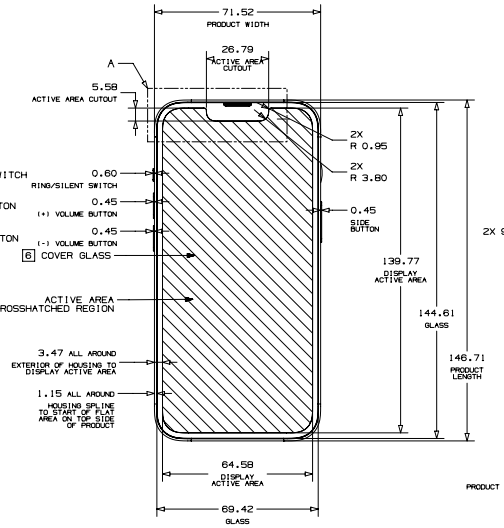

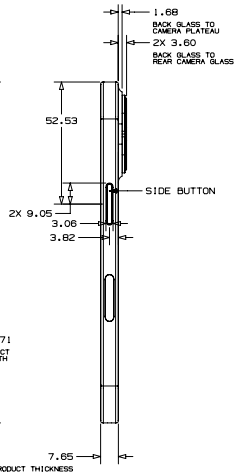

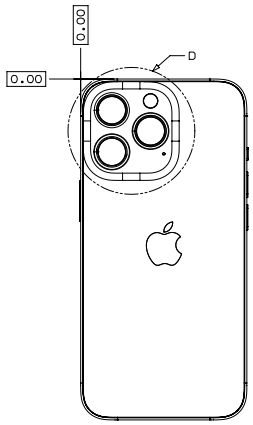

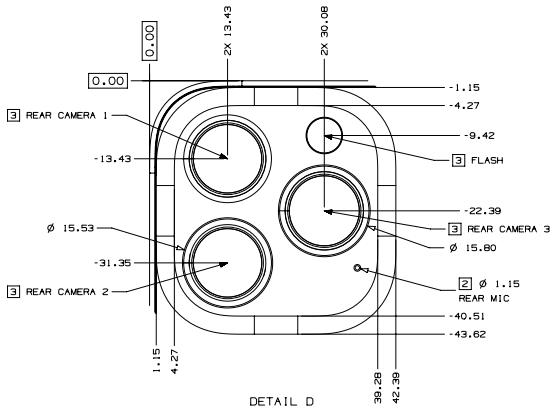

DETAIL D

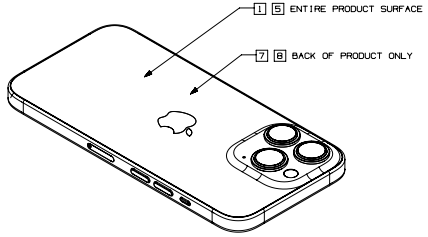

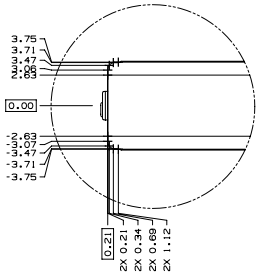

PROFILE (ALL SIDES)
DETAIL B

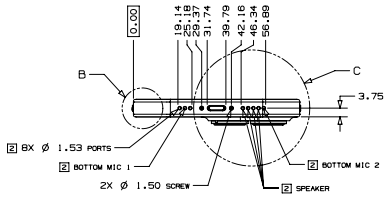

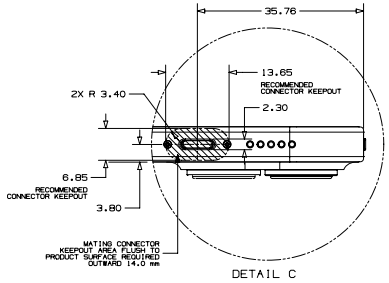

DETAIL C

METRIC	Apple Inc.
DRAFTER: APPLE INC. — DATE: 05/14/21	NOTICE OF PROPRIETARY PROPERTY: THE INFORMATION CONTAINED HEREIN IS THE PROPRIETARY PROPERTY OF APPLE INC. THE POSSESSOR AGREES TO THE FOLLOWING: (i) TO MAINTAIN THIS DOCUMENT IN CONFIDENCE (ii) NOT TO REPRODUCE OR COPY IT (iii) NOT TO REVEAL OR PUBLISH IT IN WHOLE OR PART (iv) ALL RIGHTS RESERVED
DESIGNER: APPLE INC. — DATE: 05/14/21	
0 < - < 2 ±0.05 2 < - < 10 ±0.08 10 < - < 50 ±0.10 50 < - < 100 ±0.20 100 < - < 200 ±0.30 200 < - ±0.40 ANGLES ±0.50°	TITLE: iPhone 13 Pro
	DRAWING NUMBER — REV.
THIRD ANGLE PROJECTION — SIZE D — SCALE NONE — SHT 1 OF 2	

NX GENERATED

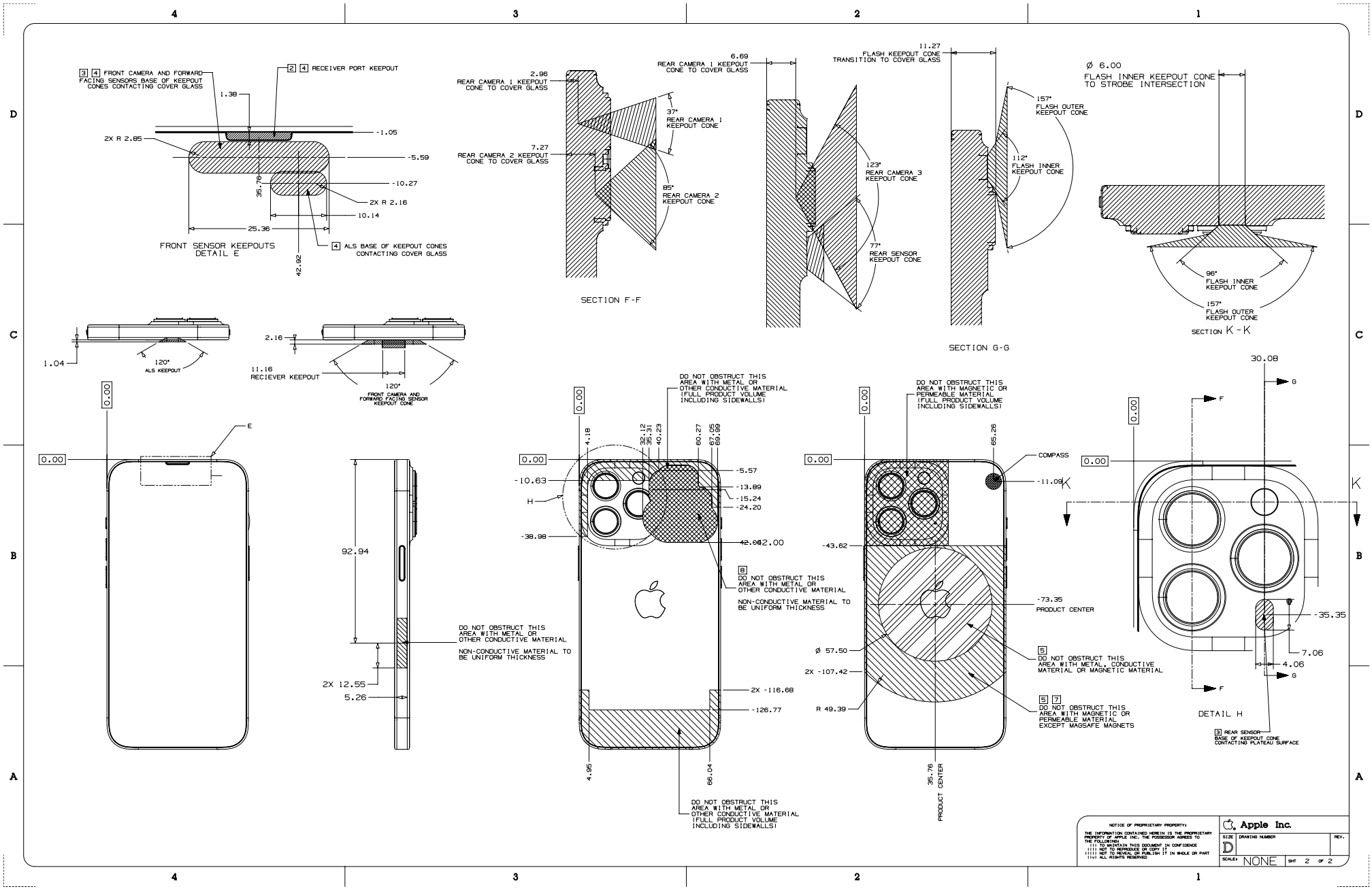
3 4 FRONT CAMERA AND FORWARD FACING SENSORS BASE OF KEEPOUT CONES CONTACTING COVER GLASS
2 4 RECEIVER PORT KEEPOUT
FRONT SENSOR KEEPOUTS DETAIL E
4 ALS BASE OF KEEPOUT CONES CONTACTING COVER GLASS
SECTION F-F
SECTION G-G
SECTION K-K
FLASH KEEPOUT CONE TRANSITION TO COVER GLASS
FLASH INNER KEEPOUT CONE TO STROBE INTERSECTION
FLASH OUTER KEEPOUT CONE
FLASH INNER KEEPOUT CONE
REAR CAMERA 1 KEEPOUT CONE TO COVER GLASS
REAR CAMERA 2 KEEPOUT CONE TO COVER GLASS
REAR CAMERA 3 KEEPOUT CONE
REAR SENSOR KEEPOUT CONE
ALS KEEPOUT
RECIEVER KEEPOUT
FRONT CAMERA AND FORWARD FACING SENSOR KEEPOUT CONE
DO NOT OBSTRUCT THIS AREA WITH METAL OR OTHER CONDUCTIVE MATERIAL (FULL PRODUCT VOLUME INCLUDING SIDEWALLS)
DO NOT OBSTRUCT THIS AREA WITH MAGNETIC OR PERMEABLE MATERIAL (FULL PRODUCT VOLUME INCLUDING SIDEWALLS)
NON-CONDUCTIVE MATERIAL TO BE UNIFORM THICKNESS
COMPASS
PRODUCT CENTER
PRODUCT CENTER
DETAIL H
REAR SENSOR BASE OF KEEPOUT CONE CONTACTING PLATEAU SURFACE
NOTICE OF PROPRIETARY PROPERTY:
Apple Inc.
SIZE D
DRAWING NUMBER
REV.
SCALE: NONE
SHT 2 OF 2

NOTES: (UNLESS OTHERWISE SPECIFIED)

1. NO METAL CONTACT WITH IPHONE.
2. DO NOT OBSTRUCT PORTS.
3. DO NOT OBSTRUCT THE IMAGING FEATURES: FRONT CAMERA, REAR CAMERAS, REAR FLASH.
4. DO NOT OBSTRUCT FORWARD FACING SENSORS.
5. RELATIVE MAGNETIC PERMEABILITY OF ANY METAL USED ON CASE: 1.05 MAX, PER ASTM A342/A342M-14.
6. DO NOT TOUCH GLASS.
7. NO MAGNETS ON REAR OF PRODUCT EXCEPT MAGSAFE MAGNETS.
8. CASE THICKNESS ON BACKSIDE OF PRODUCT: 2.1 mm MAX TO ENSURE FULL FUNCTIONALITY.

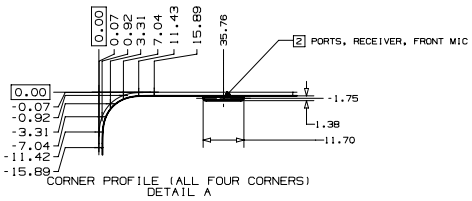

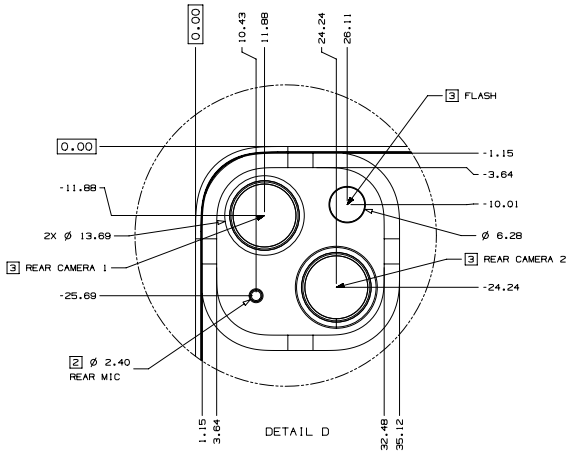

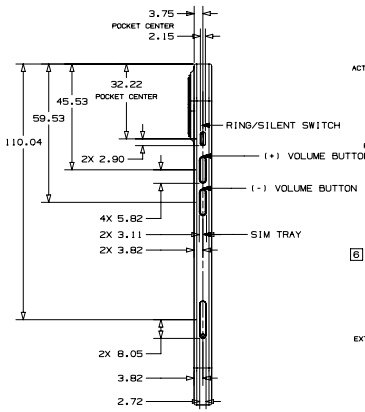

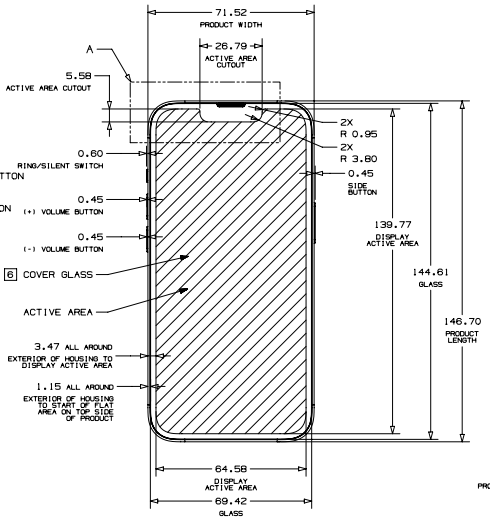

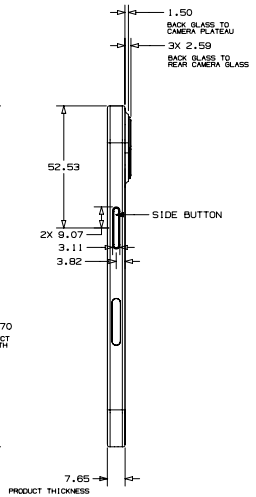

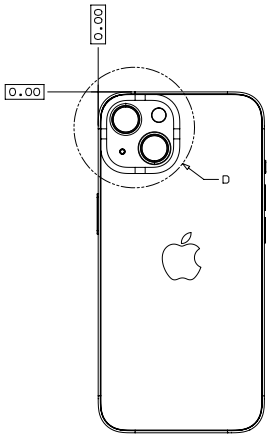

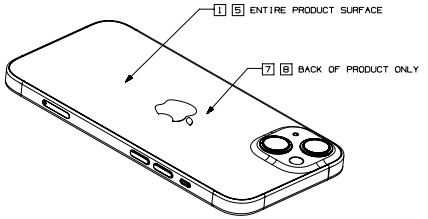

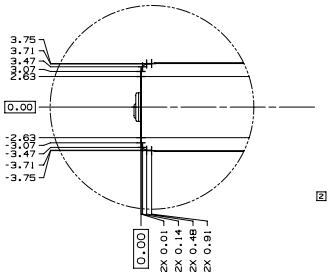

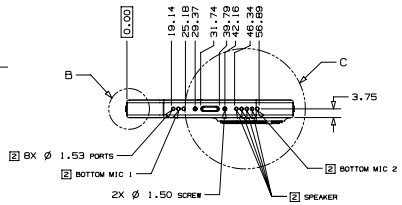

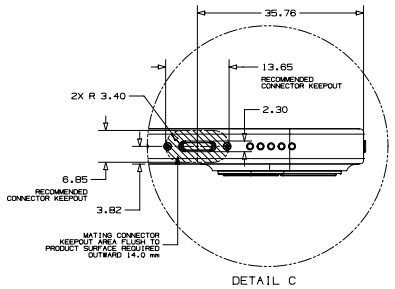

METRIC	Apple Inc.
DRAWN: APPLE INC. DATE	NOTICE OF PROPRIETARY PROPERTY: THE INFORMATION CONTAINED HEREIN IS THE PROPRIETARY PROPERTY OF APPLE INC. THE POSSESSOR AGREES TO THE FOLLOWING: (i) TO MAINTAIN THIS DOCUMENT IN CONFIDENCE (ii) NOT TO REPRODUCE OR COPY IT (iii) NOT TO REVERSE ENGINEER OR PUBLISH IT IN WHOLE OR PART (iv) ALL RIGHTS RESERVED
DESIGNER: APPLE INC. DATE	
0 < - < 2 ±0.05 2 < - < 10 ±0.08 10 < - < 50 ±0.10 50 < - < 100 ±0.20 100 < - < 200 ±0.30 200 < - ±0.40 ANGLES ±0.50°	TITLE: iPhone 13
	DRAWING NUMBER / REV.
THIRD ANGLE PROJECTION	SIZE D / SCALE NONE / SHT 1 OF 2

NX GENERATED

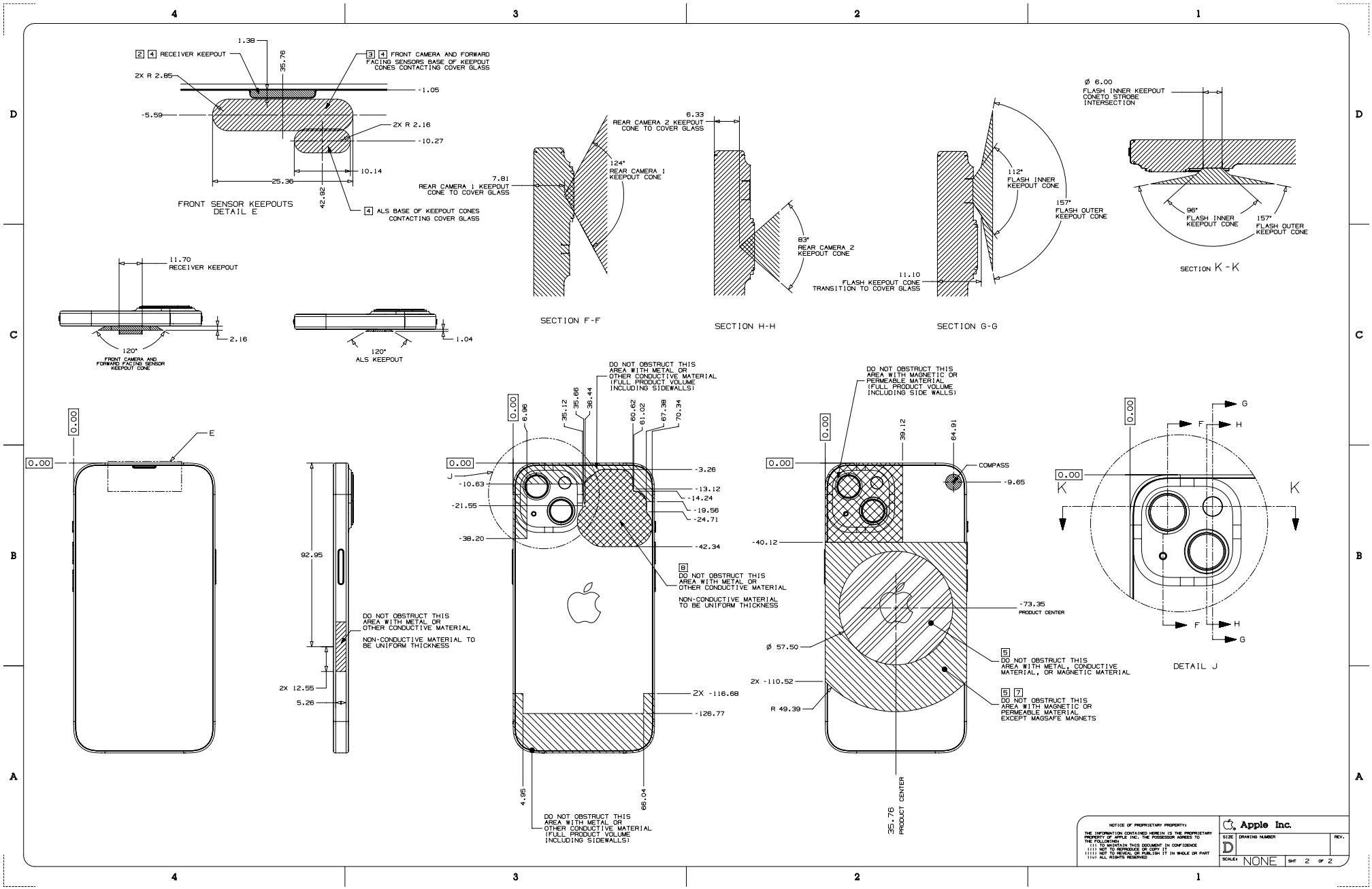
[2] [4] RECEIVER KEEPOUT
[3] [4] FRONT CAMERA AND FORWARD FACING SENSORS BASE OF KEEPOUT CONES CONTACTING COVER GLASS
[4] ALS BASE OF KEEPOUT CONES CONTACTING COVER GLASS
FRONT SENSOR KEEPOUTS
DETAIL E
REAR CAMERA 2 KEEPOUT CONE TO COVER GLASS
REAR CAMERA 1 KEEPOUT CONE TO COVER GLASS
SECTION F-F
SECTION H-H
FLASH KEEPOUT CONE TRANSITION TO COVER GLASS
FLASH INNER KEEPOUT CONE
FLASH OUTER KEEPOUT CONE
SECTION G-G
FLASH INNER KEEPOUT CONETO STROBE INTERSECTION
SECTION K-K
RECEIVER KEEPOUT
FRONT CAMERA AND FORWARD FACING SENSOR KEEPOUT CONE
ALS KEEPOUT
DO NOT OBSTRUCT THIS AREA WITH METAL OR OTHER CONDUCTIVE MATERIAL (FULL PRODUCT VOLUME INCLUDING SIDEWALLS)
[8] DO NOT OBSTRUCT THIS AREA WITH METAL OR OTHER CONDUCTIVE MATERIAL
NON-CONDUCTIVE MATERIAL TO BE UNIFORM THICKNESS
DO NOT OBSTRUCT THIS AREA WITH MAGNETIC OR PERMEABLE MATERIAL (FULL PRODUCT VOLUME INCLUDING SIDE WALLS)
COMPASS
PRODUCT CENTER
[5] DO NOT OBSTRUCT THIS AREA WITH METAL, CONDUCTIVE MATERIAL, OR MAGNETIC MATERIAL
[5] [7] DO NOT OBSTRUCT THIS AREA WITH MAGNETIC OR PERMEABLE MATERIAL EXCEPT MAGSAFE MAGNETS
DETAIL J
NOTICE OF PROPRIETARY PROPERTY:
Apple Inc.
SIZE D
DRAWING NUMBER
REV.
SCALE: NONE
SHT 2 OF 2

NOTES: (UNLESS OTHERWISE SPECIFIED)

1. NO METAL CONTACT WITH IPHONE.
2. DO NOT OBSTRUCT PORTS.
3. DO NOT OBSTRUCT THE IMAGING FEATURES: FRONT CAMERA, REAR CAMERAS, REAR FLASH.
4. DO NOT OBSTRUCT FORWARD FACING SENSORS.
5. RELATIVE MAGNETIC PERMEABILITY OF ANY METAL USED ON CASE: 1.05 MAX, PER ASTM A342/A342M-14.
6. DO NOT TOUCH GLASS.
7. NO MAGNETS ON REAR OF PRODUCT EXCEPT MAGSAFE MAGNETS.
8. CASE THICKNESS ON BACKSIDE OF PRODUCT: 2.1 mm MAX TO ENSURE FULL FUNCTIONALITY.

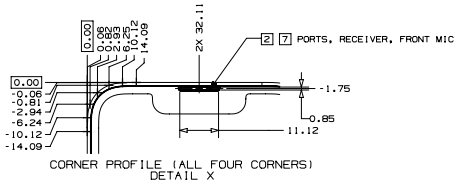

CORNER PROFILE (ALL FOUR CORNERS)
DETAIL X

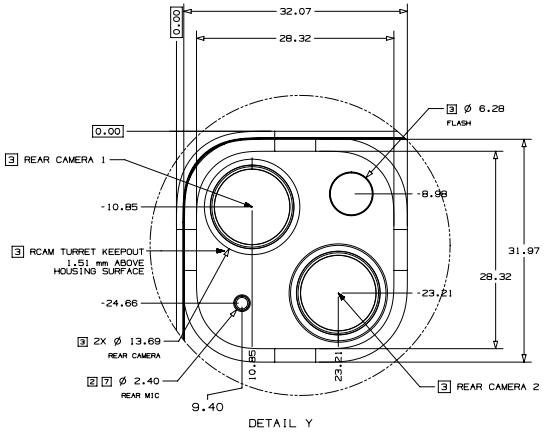

DETAIL Y

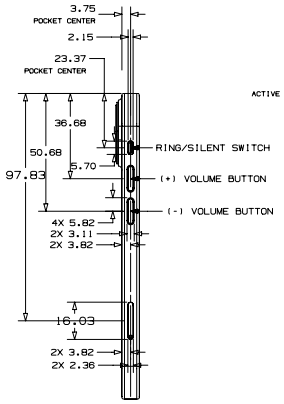

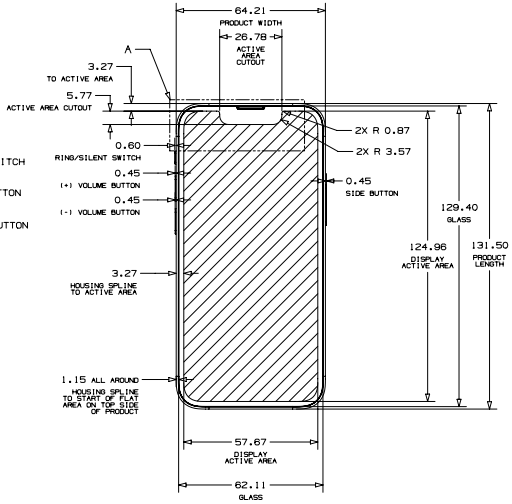

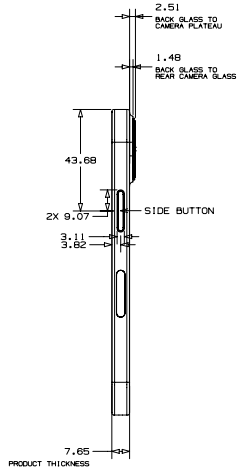

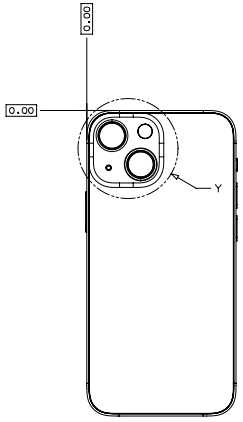

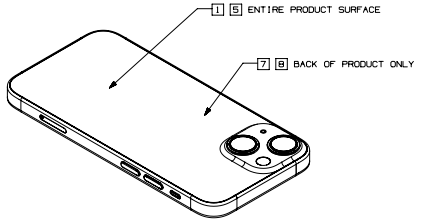

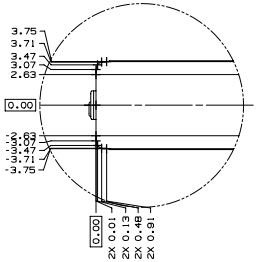

PROFILE (ALL SIDES)
DETAIL AA

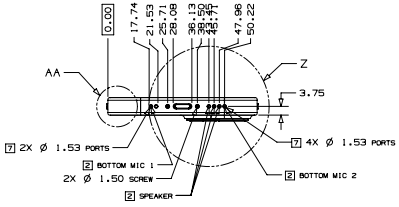

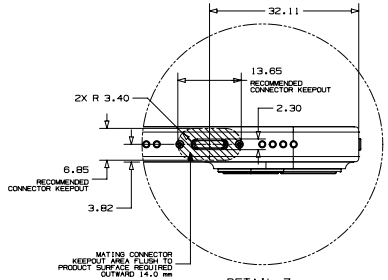

DETAIL Z

METRIC	Apple Inc.
DRAFTER: APPLE INC. DATE: 05/14/21	NOTICE OF PROPRIETARY PROPERTY: THE INFORMATION CONTAINED HEREIN IS THE PROPRIETARY PROPERTY OF APPLE INC. THE POSSESSOR AGREES TO THE FOLLOWING: (i) TO MAINTAIN THIS DOCUMENT IN CONFIDENCE (ii) NOT TO REPRODUCE OR COPY IT (iii) NOT TO REVERSE ENGINEER OR PUBLISH IT IN WHOLE OR PART (iv) ALL RIGHTS RESERVED
DESIGNER: APPLE INC. DATE: 05/14/21	TITLE: iPhone 13 mini
0 < - < 2 ±0.05 2 < - < 10 ±0.08 10 < - < 50 ±0.10 50 < - < 100 ±0.20 100 < - < 200 ±0.30 200 < - ±0.40 ANGLES ±0.50°	DRAWING NUMBER: REV.
THIRD ANGLE PROJECTION	SIZE: D SCALE: NONE SHT 1 OF 2

NX GENERATED

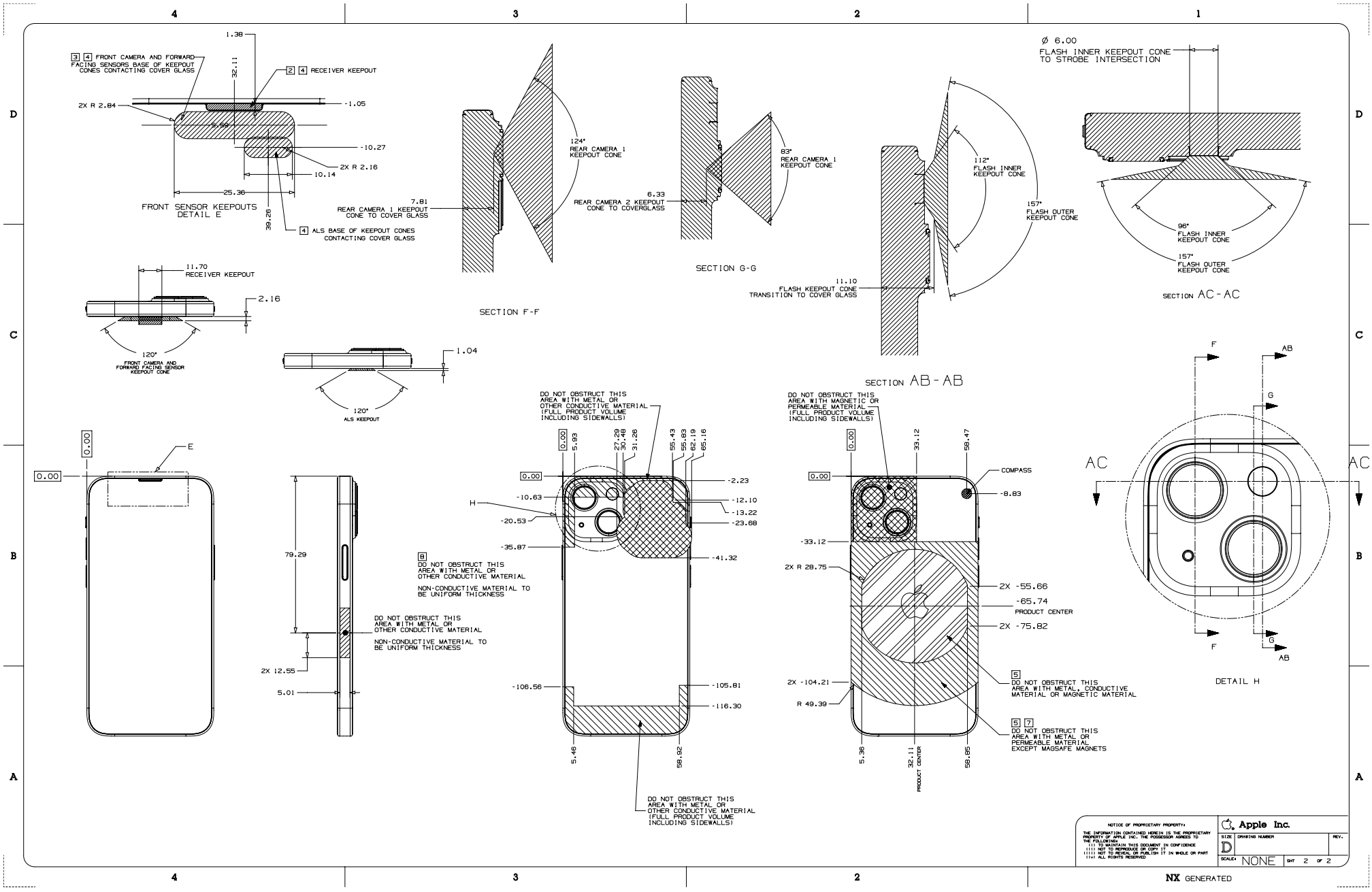
FRONT SENSOR KEEPOUTS
DETAIL E
SECTION F-F
SECTION G-G
SECTION AC - AC
SECTION AB - AB
DETAIL H
FRONT CAMERA AND FORWARD FACING SENSORS BASE OF KEEPOUT CONES CONTACTING COVER GLASS
RECEIVER KEEPOUT
ALS BASE OF KEEPOUT CONES CONTACTING COVER GLASS
REAR CAMERA 1 KEEPOUT CONE TO COVER GLASS
REAR CAMERA 2 KEEPOUT CONE TO COVERGLASS
FLASH KEEPOUT CONE TRANSITION TO COVER GLASS
FLASH INNER KEEPOUT CONE TO STROBE INTERSECTION
FRONT CAMERA AND FORWARD FACING SENSOR KEEPOUT CONE
ALS KEEPOUT
DO NOT OBSTRUCT THIS AREA WITH METAL OR OTHER CONDUCTIVE MATERIAL (FULL PRODUCT VOLUME INCLUDING SIDEWALLS)
DO NOT OBSTRUCT THIS AREA WITH METAL OR OTHER CONDUCTIVE MATERIAL
NON-CONDUCTIVE MATERIAL TO BE UNIFORM THICKNESS
DO NOT OBSTRUCT THIS AREA WITH METAL OR OTHER CONDUCTIVE MATERIAL
NON-CONDUCTIVE MATERIAL TO BE UNIFORM THICKNESS
DO NOT OBSTRUCT THIS AREA WITH METAL OR OTHER CONDUCTIVE MATERIAL (FULL PRODUCT VOLUME INCLUDING SIDEWALLS)
DO NOT OBSTRUCT THIS AREA WITH MAGNETIC OR PERMEABLE MATERIAL (FULL PRODUCT VOLUME INCLUDING SIDEWALLS)
DO NOT OBSTRUCT THIS AREA WITH METAL, CONDUCTIVE MATERIAL OR MAGNETIC MATERIAL
DO NOT OBSTRUCT THIS AREA WITH METAL OR PERMEABLE MATERIAL EXCEPT MAGSAFE MAGNETS
COMPASS
PRODUCT CENTER
PRODUCT CENTER
Ø 6.00
FLASH INNER KEEPOUT CONE TO STROBE INTERSECTION
124° REAR CAMERA 1 KEEPOUT CONE
83° REAR CAMERA 1 KEEPOUT CONE
112° FLASH INNER KEEPOUT CONE
157° FLASH OUTER KEEPOUT CONE
96° FLASH INNER KEEPOUT CONE
157° FLASH OUTER KEEPOUT CONE
Apple Inc.
NOTICE OF PROPRIETARY PROPERTY:
THE INFORMATION CONTAINED HEREIN IS THE PROPRIETARY PROPERTY OF APPLE INC. THE POSSESSOR AGREES TO THE FOLLOWING:
(i) TO MAINTAIN THIS DOCUMENT IN CONFIDENCE
(ii) NOT TO REPRODUCE OR COPY IT
(iii) NOT TO REVEAL OR PUBLISH IT IN WHOLE OR PART
(iv) ALL RIGHTS RESERVED
SIZE D
DRAWING NUMBER
REV.
SCALE: NONE
SHT 2 OF 2
NX GENERATED

56.33 iPhone 12 Pro Max 1/2

[英语]

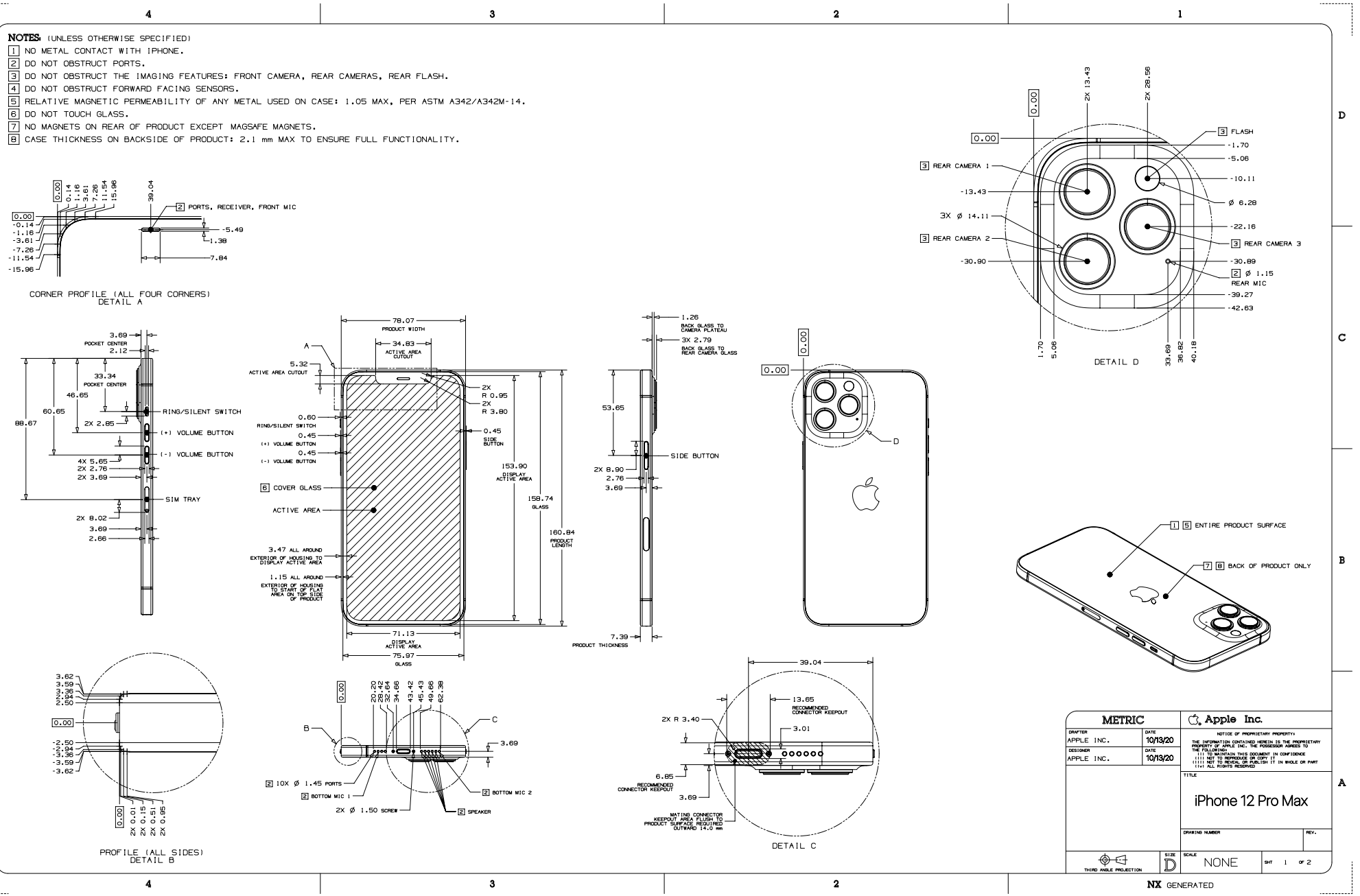

56.34 iPhone 12 Pro Max 2/2

[英语]

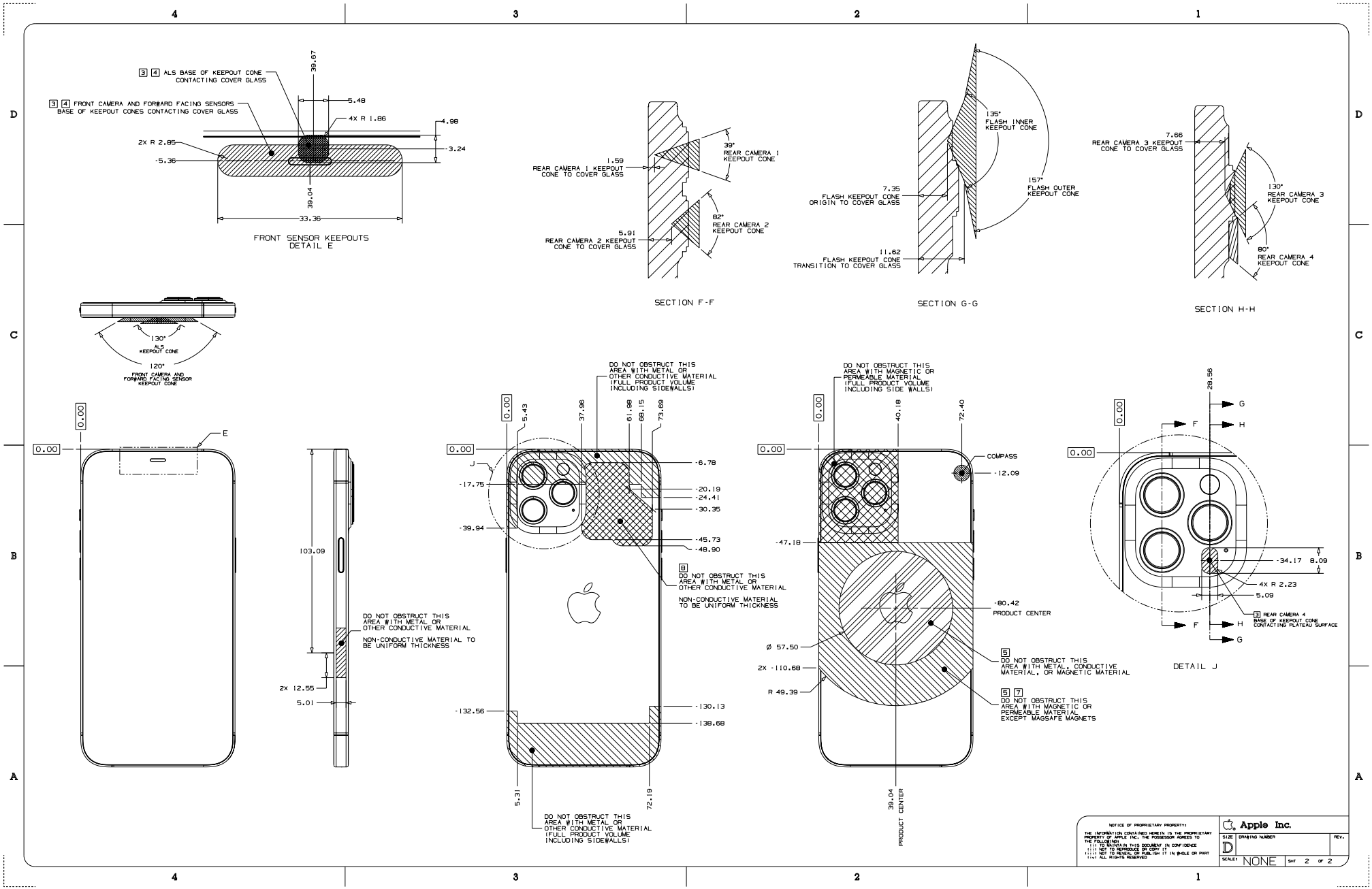

NOTES: (UNLESS OTHERWISE SPECIFIED)

1. NO METAL CONTACT WITH IPHONE.
2. DO NOT OBSTRUCT PORTS.
3. DO NOT OBSTRUCT THE IMAGING FEATURES: FRONT CAMERA, REAR CAMERAS, REAR FLASH.
4. DO NOT OBSTRUCT FORWARD FACING SENSORS.
5. RELATIVE MAGNETIC PERMEABILITY OF ANY METAL USED ON CASE: 1.05 MAX, PER ASTM A342/A342M-14.
6. DO NOT TOUCH GLASS.
7. NO MAGNETS ON REAR OF PRODUCT EXCEPT MAGSAFE MAGNETS.
8. CASE THICKNESS ON BACKSIDE OF PRODUCT: 2.1 mm MAX TO ENSURE FULL FUNCTIONALITY.

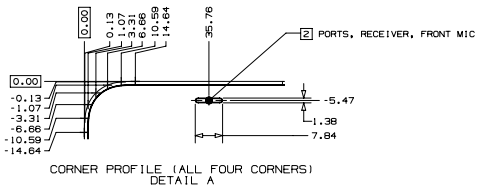

CORNER PROFILE (ALL FOUR CORNERS)
DETAIL A

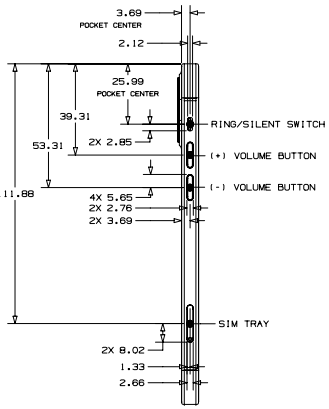

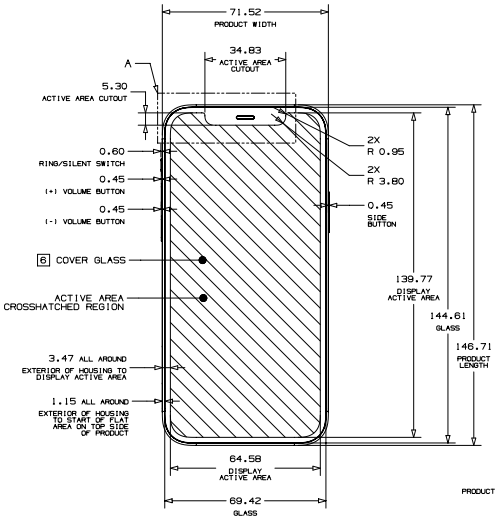

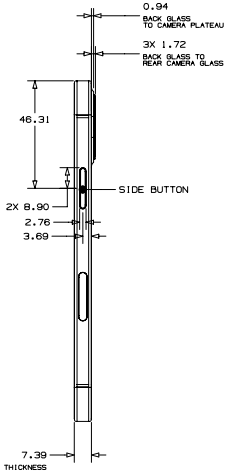

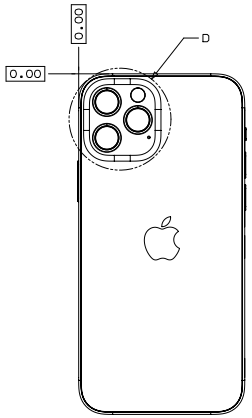

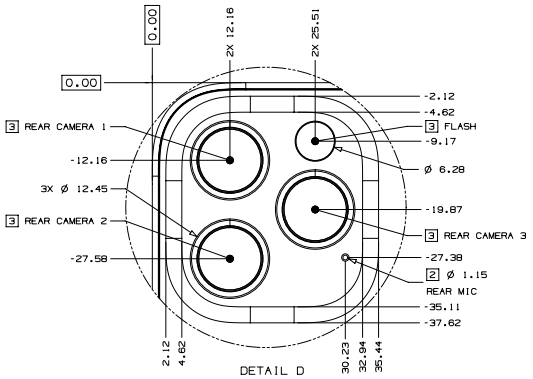

DETAIL D

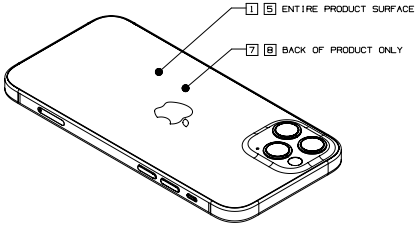

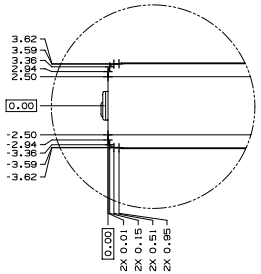

PROFILE (ALL SIDES)
DETAIL B

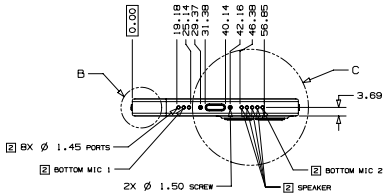

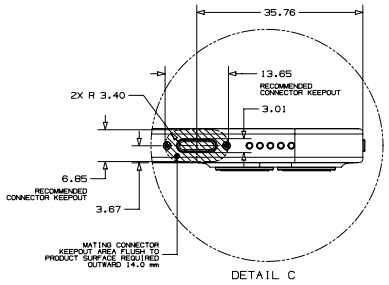

DETAIL C

METRIC	Apple Inc.
DRAFTER: APPLE INC. — DATE: 10/13/20	NOTICE OF PROPRIETARY PROPERTY: THE INFORMATION CONTAINED HEREIN IS THE PROPRIETARY PROPERTY OF APPLE INC. THE POSSESSOR AGREES TO THE FOLLOWING: (i) TO MAINTAIN THIS DOCUMENT IN CONFIDENCE (ii) NOT TO REPRODUCE OR COPY IT (iii) NOT TO REVEAL OR PUBLISH IT IN WHOLE OR PART (iv) ALL RIGHTS RESERVED
DESIGNER: APPLE INC. — DATE: 10/13/20	TITLE: iPhone 12 Pro
	DRAWING NUMBER — REV.
THIRD ANGLE PROJECTION — SIZE: D	SCALE: NONE — SHT 1 OF 2

NX GENERATED

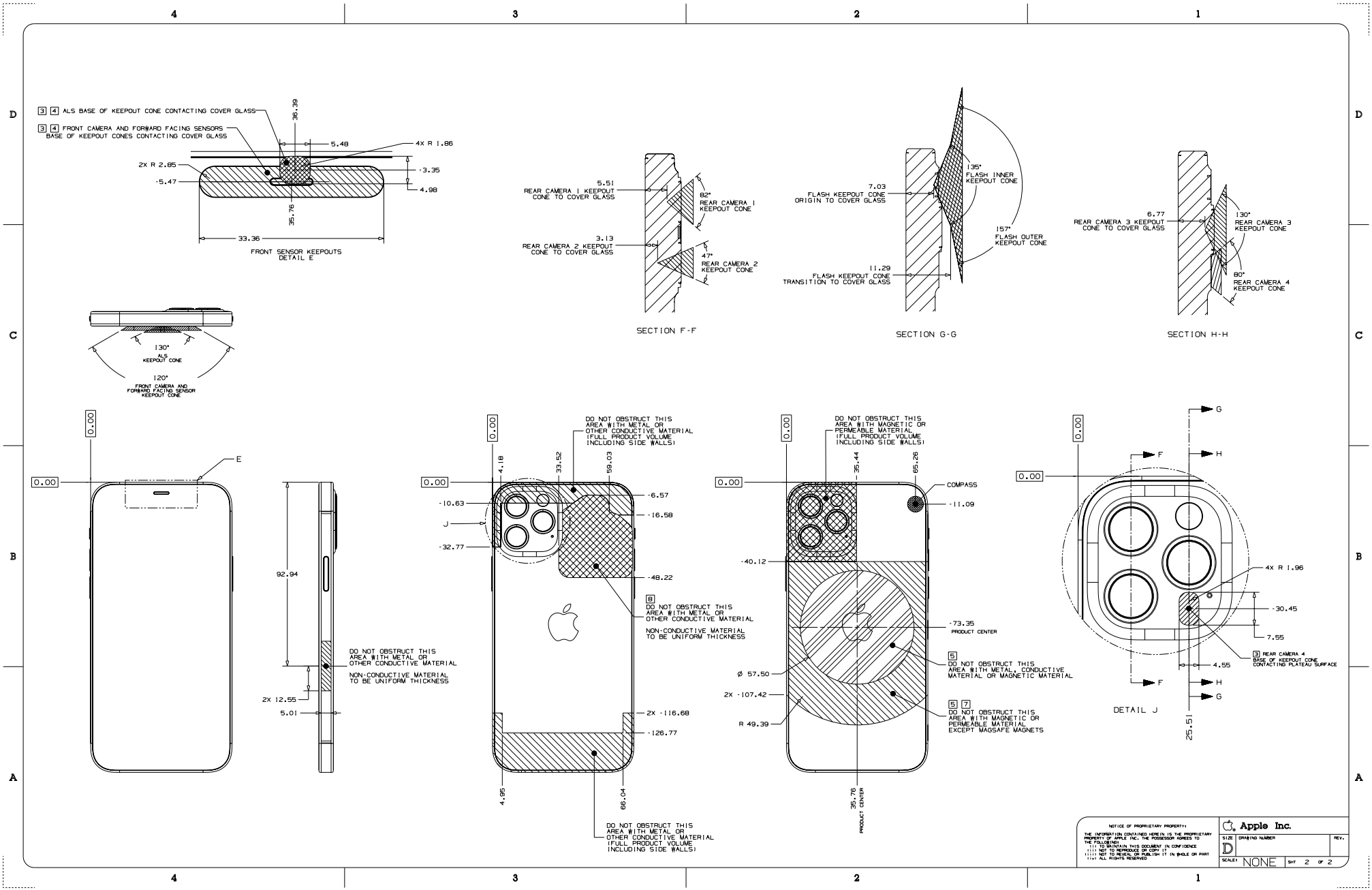
[3] [4] ALS BASE OF KEEPOUT CONE CONTACTING COVER GLASS
[3] [4] FRONT CAMERA AND FORWARD FACING SENSORS BASE OF KEEPOUT CONES CONTACTING COVER GLASS
36.39
5.48
4X R 1.86
2X R 2.85
5.47
3.35
4.98
35.76
33.36
FRONT SENSOR KEEPOUTS
DETAIL E
130°
ALS KEEPOUT CONE
120°
FRONT CAMERA AND FORWARD FACING SENSOR KEEPOUT CONE
5.51
REAR CAMERA 1 KEEPOUT CONE TO COVER GLASS
82°
REAR CAMERA 1 KEEPOUT CONE
3.13
REAR CAMERA 2 KEEPOUT CONE TO COVER GLASS
47°
REAR CAMERA 2 KEEPOUT CONE
SECTION F-F
7.03
FLASH KEEPOUT CONE ORIGIN TO COVER GLASS
135°
FLASH INNER KEEPOUT CONE
157°
FLASH OUTER KEEPOUT CONE
11.29
FLASH KEEPOUT CONE TRANSITION TO COVER GLASS
SECTION G-G
6.77
REAR CAMERA 3 KEEPOUT CONE TO COVER GLASS
130°
REAR CAMERA 3 KEEPOUT CONE
80°
REAR CAMERA 4 KEEPOUT CONE
SECTION H-H
0.00
E
92.94
DO NOT OBSTRUCT THIS AREA WITH METAL OR OTHER CONDUCTIVE MATERIAL
NON-CONDUCTIVE MATERIAL TO BE UNIFORM THICKNESS
2X 12.55
5.01
4.18
33.52
59.03
DO NOT OBSTRUCT THIS AREA WITH METAL OR OTHER CONDUCTIVE MATERIAL (FULL PRODUCT VOLUME INCLUDING SIDE WALLS)
10.63
J
32.77
6.57
16.58
48.22
[8] DO NOT OBSTRUCT THIS AREA WITH METAL OR OTHER CONDUCTIVE MATERIAL
NON-CONDUCTIVE MATERIAL TO BE UNIFORM THICKNESS
2X 116.68
126.77
4.95
66.04
DO NOT OBSTRUCT THIS AREA WITH METAL OR OTHER CONDUCTIVE MATERIAL (FULL PRODUCT VOLUME INCLUDING SIDE WALLS)
35.44
65.26
DO NOT OBSTRUCT THIS AREA WITH MAGNETIC OR PERMEABLE MATERIAL (FULL PRODUCT VOLUME INCLUDING SIDE WALLS)
COMPASS
11.09
40.12
73.35
PRODUCT CENTER
[5] DO NOT OBSTRUCT THIS AREA WITH METAL, CONDUCTIVE MATERIAL OR MAGNETIC MATERIAL
Ø 57.50
2X 107.42
R 49.39
[5] [7] DO NOT OBSTRUCT THIS AREA WITH MAGNETIC OR PERMEABLE MATERIAL EXCEPT MAGSAFE MAGNETS
35.76
PRODUCT CENTER
G
F
H
4X R 1.96
30.45
7.55
4.55
[3] REAR CAMERA 4 BASE OF KEEPOUT CONE CONTACTING PLATEAU SURFACE
DETAIL J
25.51
NOTICE OF PROPRIETARY PROPERTY:
THE INFORMATION CONTAINED HEREIN IS THE PROPRIETARY PROPERTY OF APPLE INC. THE POSSESSOR AGREES TO THE FOLLOWING:
(i) TO MAINTAIN THIS DOCUMENT IN CONFIDENCE
(ii) NOT TO REPRODUCE OR COPY IT
(iii) NOT TO REVEAL OR PUBLISH IT IN WHOLE OR PART
(iv) ALL RIGHTS RESERVED
Apple Inc.
SIZE D
DRAWING NUMBER
REV.
SCALE: NONE
SHT 2 OF 2

NOTES: (UNLESS OTHERWISE SPECIFIED)

1. NO METAL CONTACT WITH IPHONE.
2. DO NOT OBSTRUCT PORTS.
3. DO NOT OBSTRUCT THE IMAGING FEATURES: FRONT CAMERA, REAR CAMERAS, REAR FLASH.
4. DO NOT OBSTRUCT FORWARD FACING SENSORS.
5. RELATIVE MAGNETIC PERMEABILITY OF ANY METAL USED ON CASE: 1.05 MAX, PER ASTM A342/A342M-14.
6. DO NOT TOUCH GLASS.
7. NO MAGNETS ON REAR OF PRODUCT EXCEPT MAGSAFE MAGNETS.
8. CASE THICKNESS ON BACKSIDE OF PRODUCT: 2.1 mm MAX TO ENSURE FULL FUNCTIONALITY.

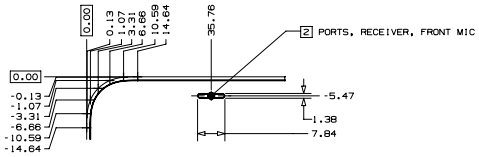

CORNER PROFILE (ALL FOUR CORNERS)
DETAIL A

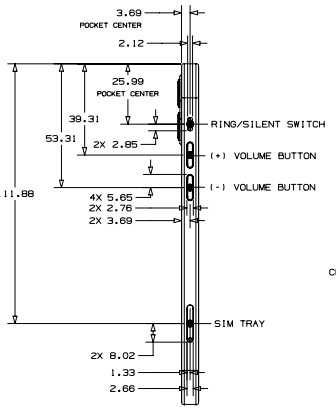

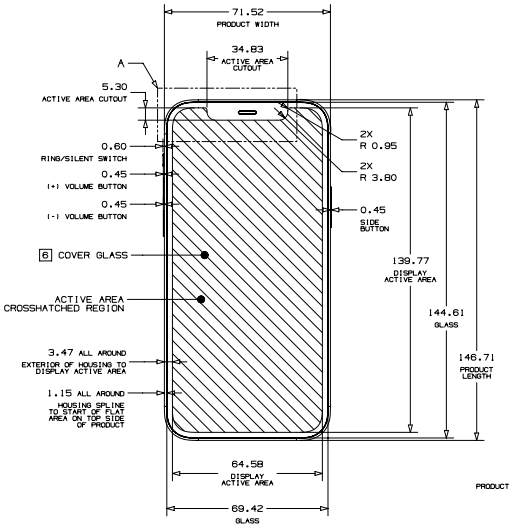

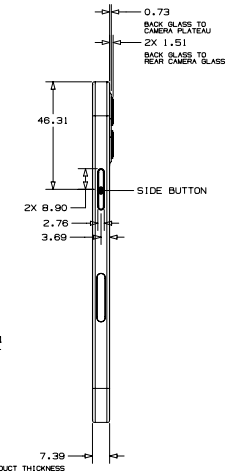

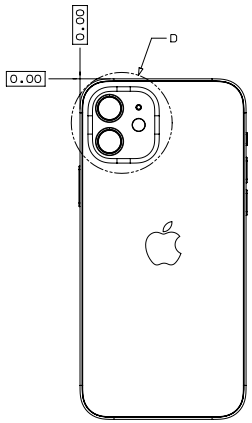

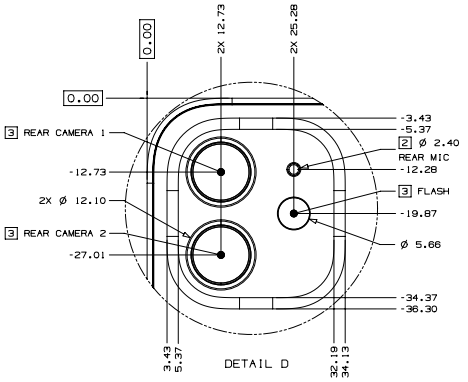

DETAIL D

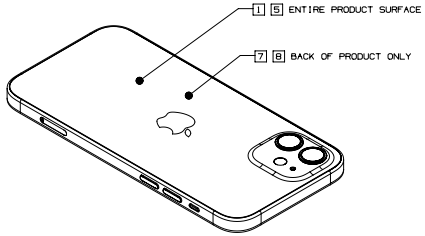

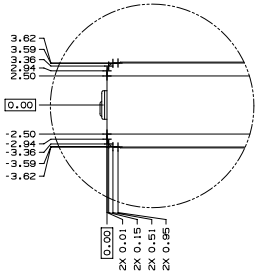

PROFILE (ALL SIDES)
DETAIL B

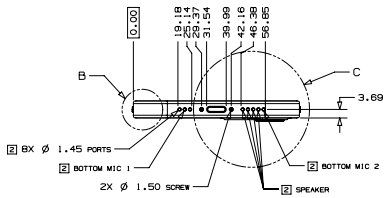

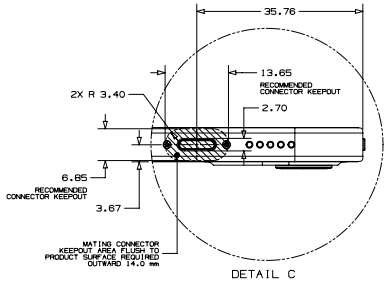

DETAIL C

METRIC		Apple Inc.	
DRAFTER: APPLE INC.	DATE: 10/13/20	NOTICE OF PROPRIETARY PROPERTY: THE INFORMATION CONTAINED HEREIN IS THE PROPRIETARY PROPERTY OF APPLE INC. THE POSSESSOR AGREES TO THE FOLLOWING: (i) TO MAINTAIN THIS DOCUMENT IN CONFIDENCE (ii) NOT TO COPY OR REPRODUCE IT (iii) NOT TO REVEAL OR PUBLISH IT IN WHOLE OR PART (iv) ALL RIGHTS RESERVED	
DESIGNER: APPLE INC.	DATE: 10/13/20	TITLE: iPhone 12	
		DRAWING NUMBER	REV.
THIRD ANGLE PROJECTION	SIZE: D	SCALE: NONE	SHT 1 OF 2

NX GENERATED

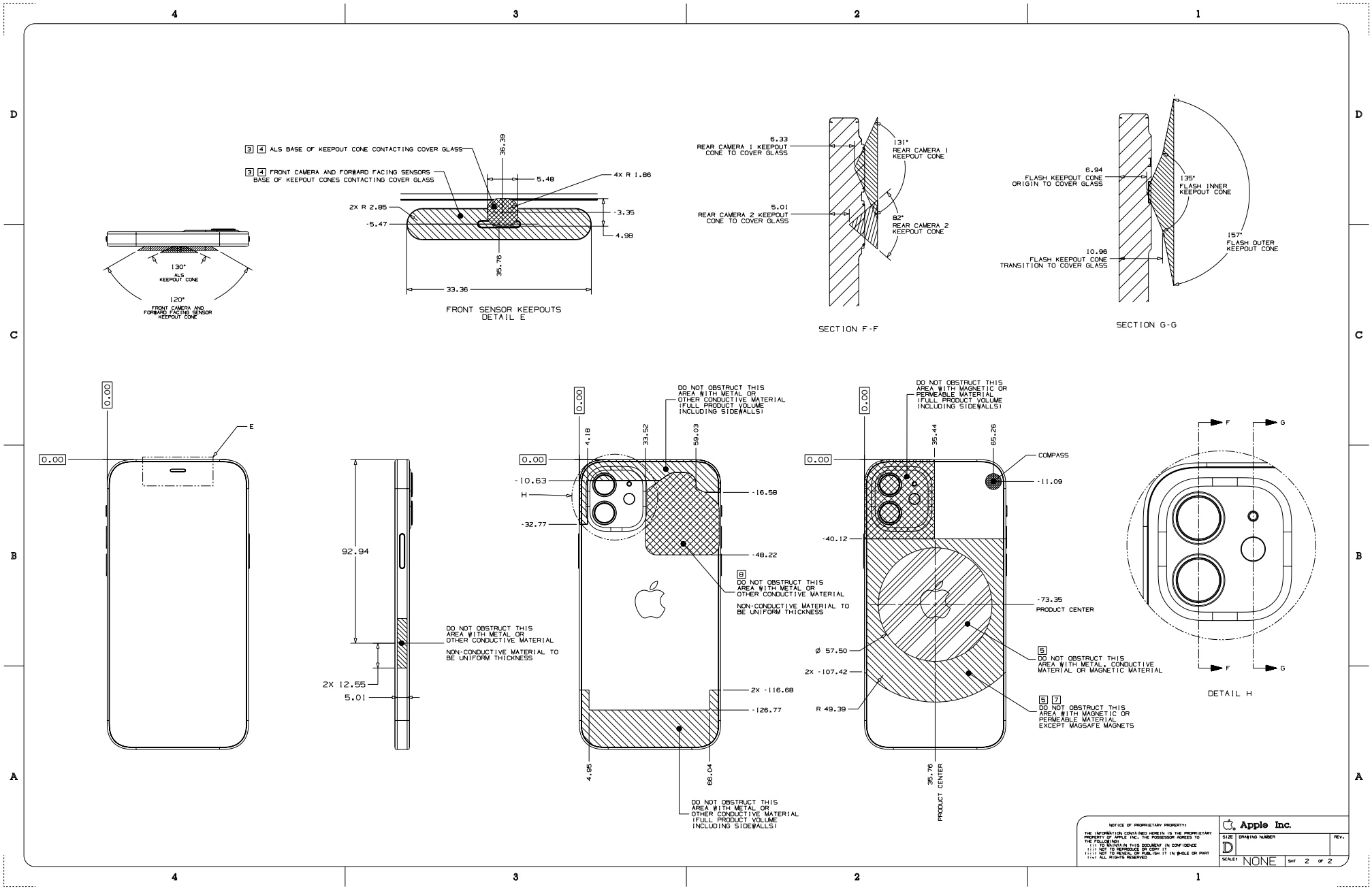
3 4 ALS BASE OF KEEPOUT CONE CONTACTING COVER GLASS
3 4 FRONT CAMERA AND FORWARD FACING SENSORS BASE OF KEEPOUT CONES CONTACTING COVER GLASS
36.39
5.48
4X R 1.86
2X R 2.85
5.47
3.35
4.98
35.76
33.36
130° ALS KEEPOUT CONE
120° FRONT CAMERA AND FORWARD FACING SENSOR KEEPOUT CONE
FRONT SENSOR KEEPOUTS DETAIL E
6.33 REAR CAMERA 1 KEEPOUT CONE TO COVER GLASS
5.01 REAR CAMERA 2 KEEPOUT CONE TO COVER GLASS
131° REAR CAMERA 1 KEEPOUT CONE
82° REAR CAMERA 2 KEEPOUT CONE
SECTION F-F
6.94 FLASH KEEPOUT CONE ORIGIN TO COVER GLASS
10.96 FLASH KEEPOUT CONE TRANSITION TO COVER GLASS
135° FLASH INNER KEEPOUT CONE
157° FLASH OUTER KEEPOUT CONE
SECTION G-G
0.00
E
92.94
2X 12.55
5.01
DO NOT OBSTRUCT THIS AREA WITH METAL OR OTHER CONDUCTIVE MATERIAL
NON-CONDUCTIVE MATERIAL TO BE UNIFORM THICKNESS
4.18
33.52
59.03
-10.63
H
-32.77
-16.58
-48.22
B DO NOT OBSTRUCT THIS AREA WITH METAL OR OTHER CONDUCTIVE MATERIAL
NON-CONDUCTIVE MATERIAL TO BE UNIFORM THICKNESS
2X -116.68
-126.77
4.95
66.04
DO NOT OBSTRUCT THIS AREA WITH METAL OR OTHER CONDUCTIVE MATERIAL (FULL PRODUCT VOLUME INCLUDING SIDEWALLS)
DO NOT OBSTRUCT THIS AREA WITH MAGNETIC OR PERMEABLE MATERIAL (FULL PRODUCT VOLUME INCLUDING SIDEWALLS)
35.44
65.26
COMPASS
-11.09
-40.12
-73.35
PRODUCT CENTER
Ø 57.50
2X -107.42
R 49.39
5 DO NOT OBSTRUCT THIS AREA WITH METAL, CONDUCTIVE MATERIAL OR MAGNETIC MATERIAL
5 7 DO NOT OBSTRUCT THIS AREA WITH MAGNETIC OR PERMEABLE MATERIAL EXCEPT MAGSAFE MAGNETS
35.76
PRODUCT CENTER
F
G
DETAIL H
NOTICE OF PROPRIETARY PROPERTY:
THE INFORMATION CONTAINED HEREIN IS THE PROPRIETARY PROPERTY OF APPLE INC. THE POSSESSOR AGREES TO THE FOLLOWING:
(i) TO MAINTAIN THIS DOCUMENT IN CONFIDENCE
(ii) NOT TO REPRODUCE OR COPY IT
(iii) NOT TO REVEAL OR PUBLISH IT IN WHOLE OR PART
(iv) ALL RIGHTS RESERVED
Apple Inc.
SIZE D
DRAWING NUMBER
REV.
SCALE: NONE
SHT 2 OF 2

NOTES: (UNLESS OTHERWISE SPECIFIED)

1. NO METAL CONTACT WITH IPHONE.
2. DO NOT OBSTRUCT PORTS.
3. DO NOT OBSTRUCT THE IMAGING FEATURES: FRONT CAMERA, REAR CAMERAS, REAR FLASH.
4. DO NOT OBSTRUCT FORWARD FACING SENSORS.
5. RELATIVE MAGNETIC PERMEABILITY OF ANY METAL USED ON CASE: 1.05 MAX, PER ASTM A342/A342M-14.
6. DO NOT TOUCH GLASS.
7. NO MAGNETS ON REAR OF PRODUCT EXCEPT MAGSAFE MAGNETS.
8. CASE THICKNESS ON BACKSIDE OF PRODUCT: 2.1 mm MAX TO ENSURE FULL FUNCTIONALITY.

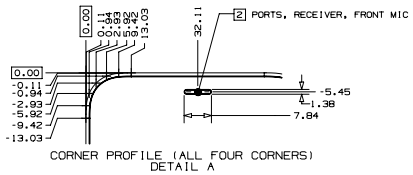

CORNER PROFILE (ALL FOUR CORNERS)
DETAIL A

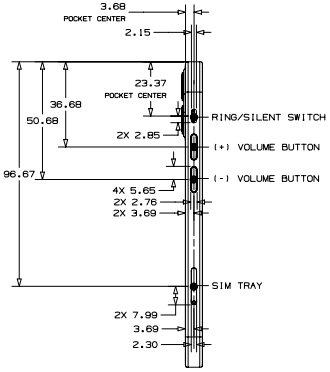

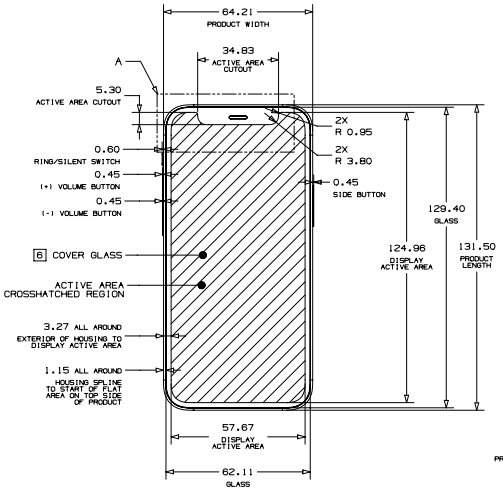

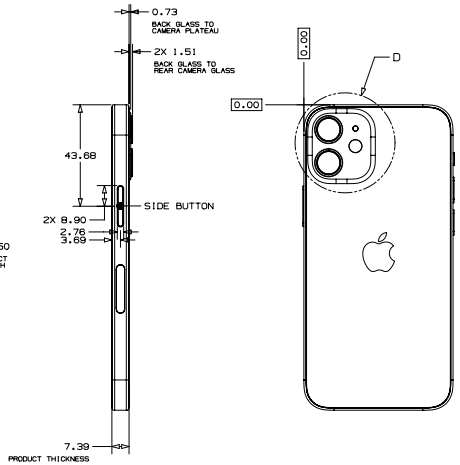

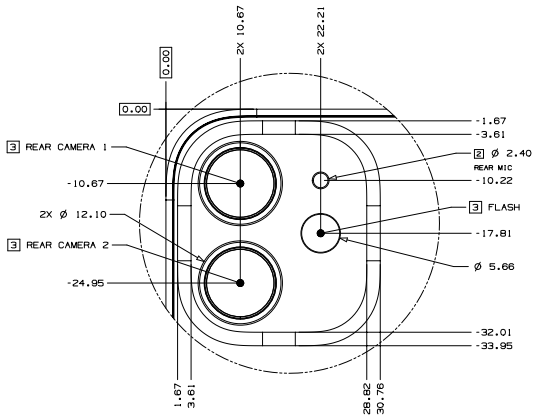

DETAIL D

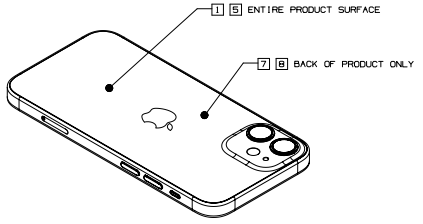

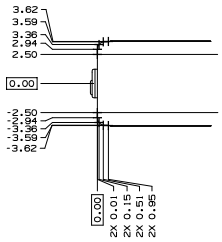

PROFILE (ALL SIDES)
DETAIL B

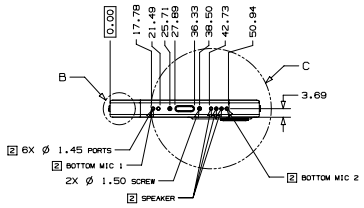

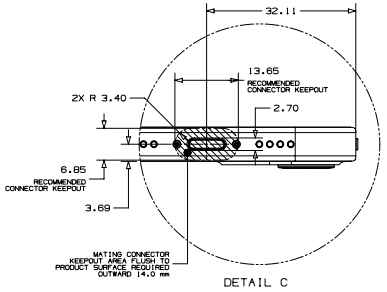

DETAIL C

METRIC		Apple Inc.	
DRAFTER: APPLE INC.	DATE: 10/13/20	NOTICE OF PROPRIETARY PROPERTY: THE INFORMATION CONTAINED HEREIN IS THE PROPRIETARY PROPERTY OF APPLE INC. THE POSSESSOR AGREES TO THE FOLLOWING: (i) TO MAINTAIN THIS DOCUMENT IN CONFIDENCE (ii) NOT TO REPRODUCE OR COPY IT (iii) NOT TO REVEAL OR PUBLISH IT IN WHOLE OR PART (iv) ALL RIGHTS RESERVED	
DESIGNER: APPLE INC.	DATE: 10/13/20	TITLE: iPhone 12 mini	
		DRAWING NUMBER	REV.
THIRD ANGLE PROJECTION	SIZE: D	SCALE: NONE	SHT 1 OF 2

NX GENERATED

56.40 iPhone 12 mini 2/2

[英语]

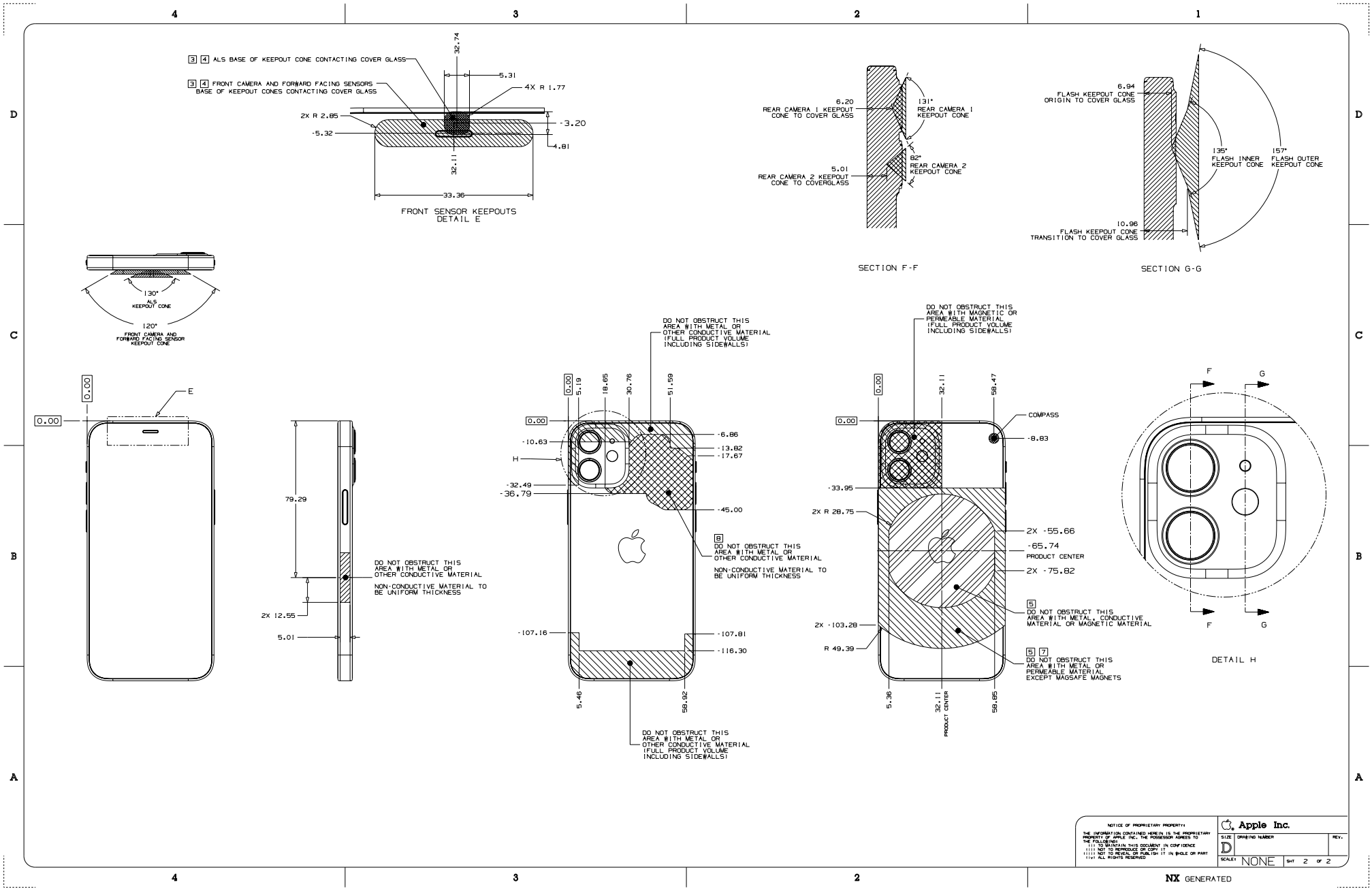

56.41 iPhone SE（第 3 代）和 iPhone SE（第 2 代）

[英语]

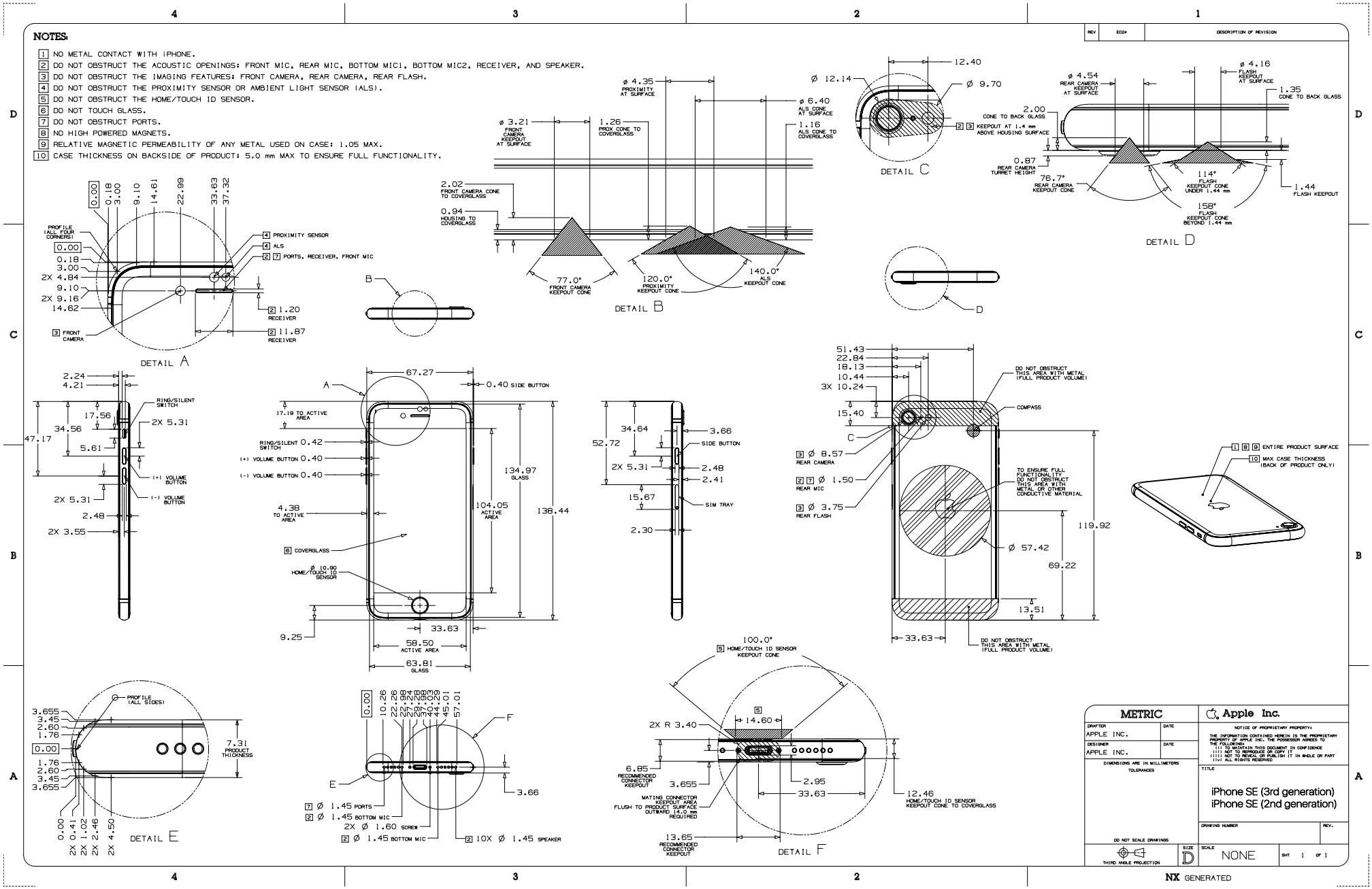

56.42 iPhone 11 Pro Max

[英语]

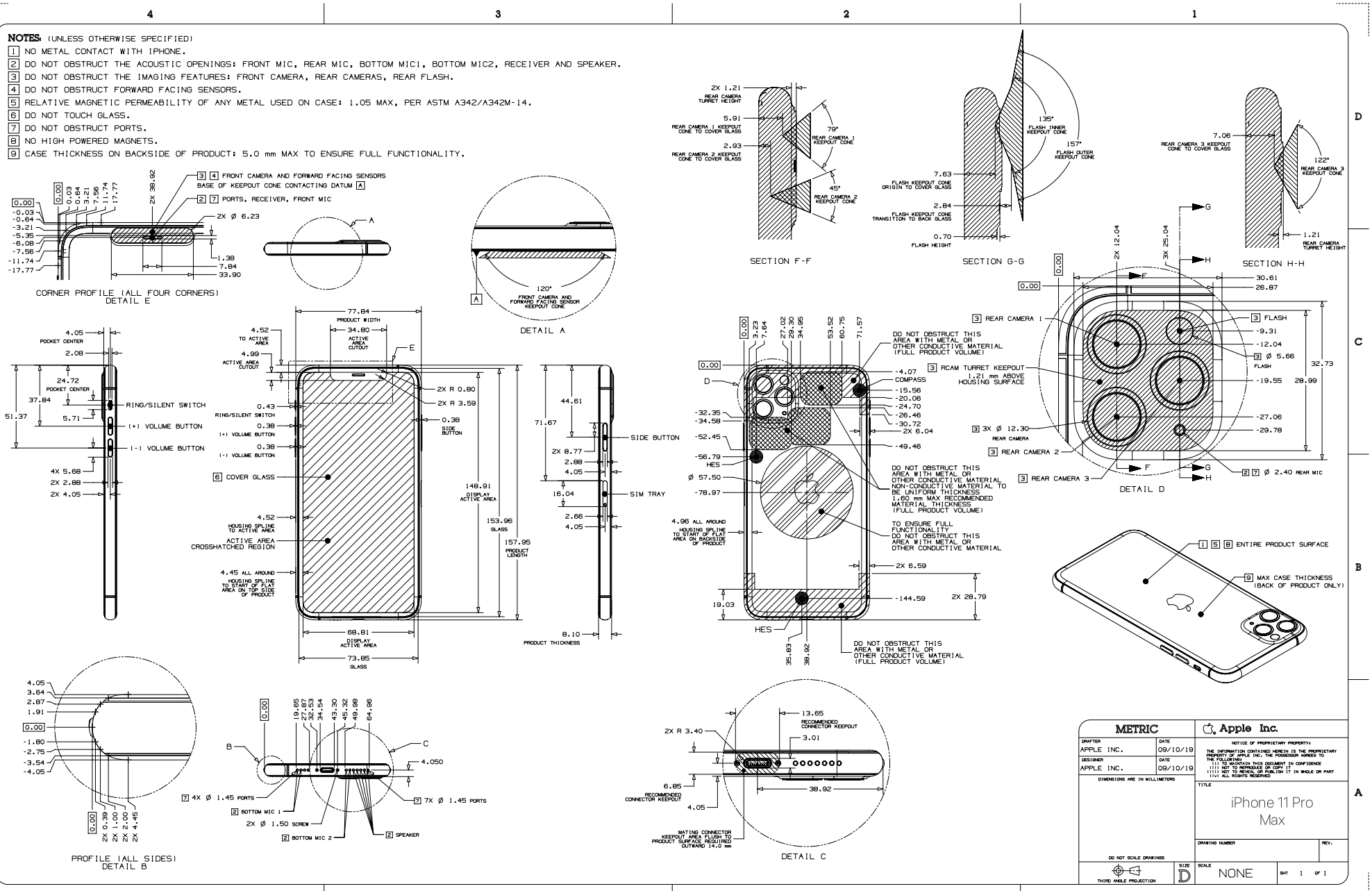

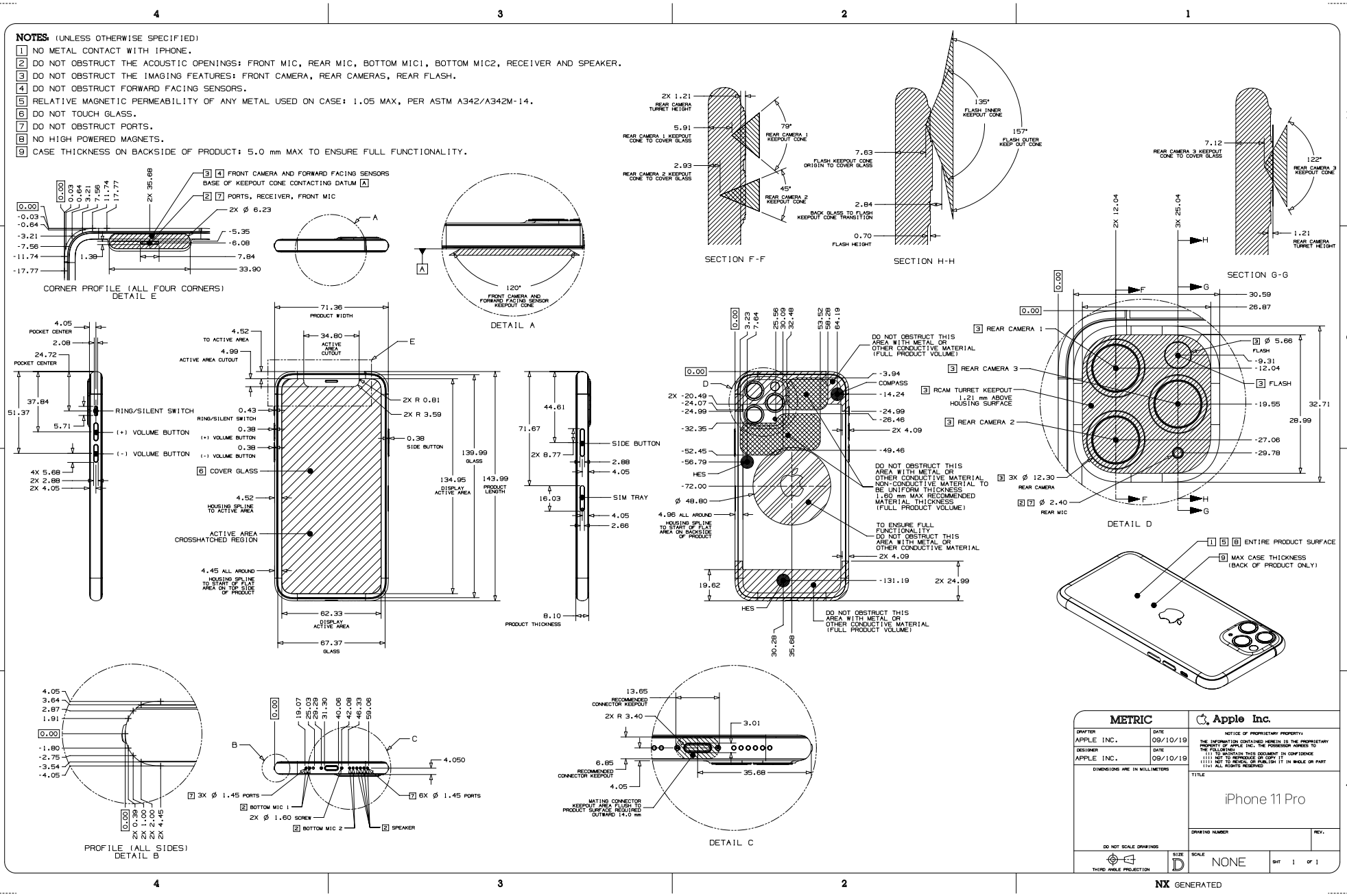
NOTES: (UNLESS OTHERWISE SPECIFIED)
1 NO METAL CONTACT WITH IPHONE.
2 DO NOT OBSTRUCT THE ACOUSTIC OPENINGS: FRONT MIC, REAR MIC, BOTTOM MIC1, BOTTOM MIC2, RECEIVER AND SPEAKER.
3 DO NOT OBSTRUCT THE IMAGING FEATURES: FRONT CAMERA, REAR CAMERAS, REAR FLASH.
4 DO NOT OBSTRUCT FORWARD FACING SENSORS.
5 RELATIVE MAGNETIC PERMEABILITY OF ANY METAL USED ON CASE: 1.05 MAX, PER ASTM A342/A342M-14.
6 DO NOT TOUCH GLASS.
7 DO NOT OBSTRUCT PORTS.
8 NO HIGH POWERED MAGNETS.
9 CASE THICKNESS ON BACKSIDE OF PRODUCT: 5.0 mm MAX TO ENSURE FULL FUNCTIONALITY.
CORNER PROFILE (ALL FOUR CORNERS)
DETAIL E
DETAIL A
SECTION F-F
SECTION H-H
SECTION G-G
DETAIL D
PROFILE (ALL SIDES)
DETAIL B
DETAIL C
METRIC
Apple Inc.
iPhone 11 Pro
NX GENERATED

NOTES:

1. NO METAL CONTACT WITH IPHONE.
2. DO NOT OBSTRUCT THE ACOUSTIC OPENINGS: FRONT MIC, REAR MIC, BOTTOM MIC1, BOTTOM MIC2, RECEIVER AND SPEAKER.
3. DO NOT OBSTRUCT THE IMAGING FEATURES: FRONT CAMERA, REAR CAMERA, REAR FLASH.
4. DO NOT OBSTRUCT FORWARD FACING SENSORS.
5. RELATIVE MAGNETIC PERMEABILITY OF ANY METAL USED ON CASE: 1.05 MAX, PER ASTM A342/A342M-14.
6. DO NOT TOUCH GLASS.
7. DO NOT OBSTRUCT PORTS.
8. NO HIGH POWERED MAGNETS.
9. CASE THICKNESS ON BACKSIDE OF PRODUCT: 5.0 mm MAX TO ENSURE FULL FUNCTIONALITY.

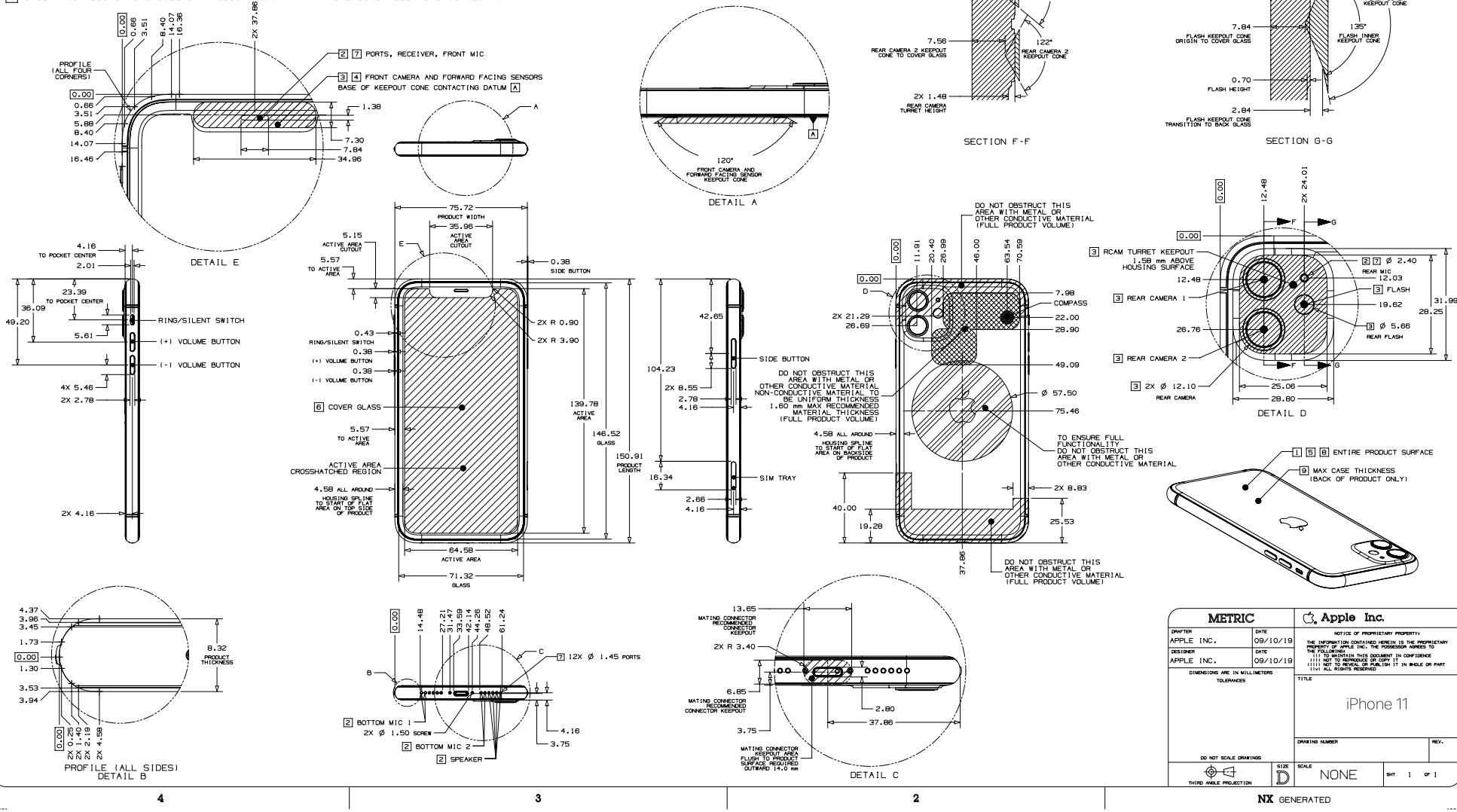

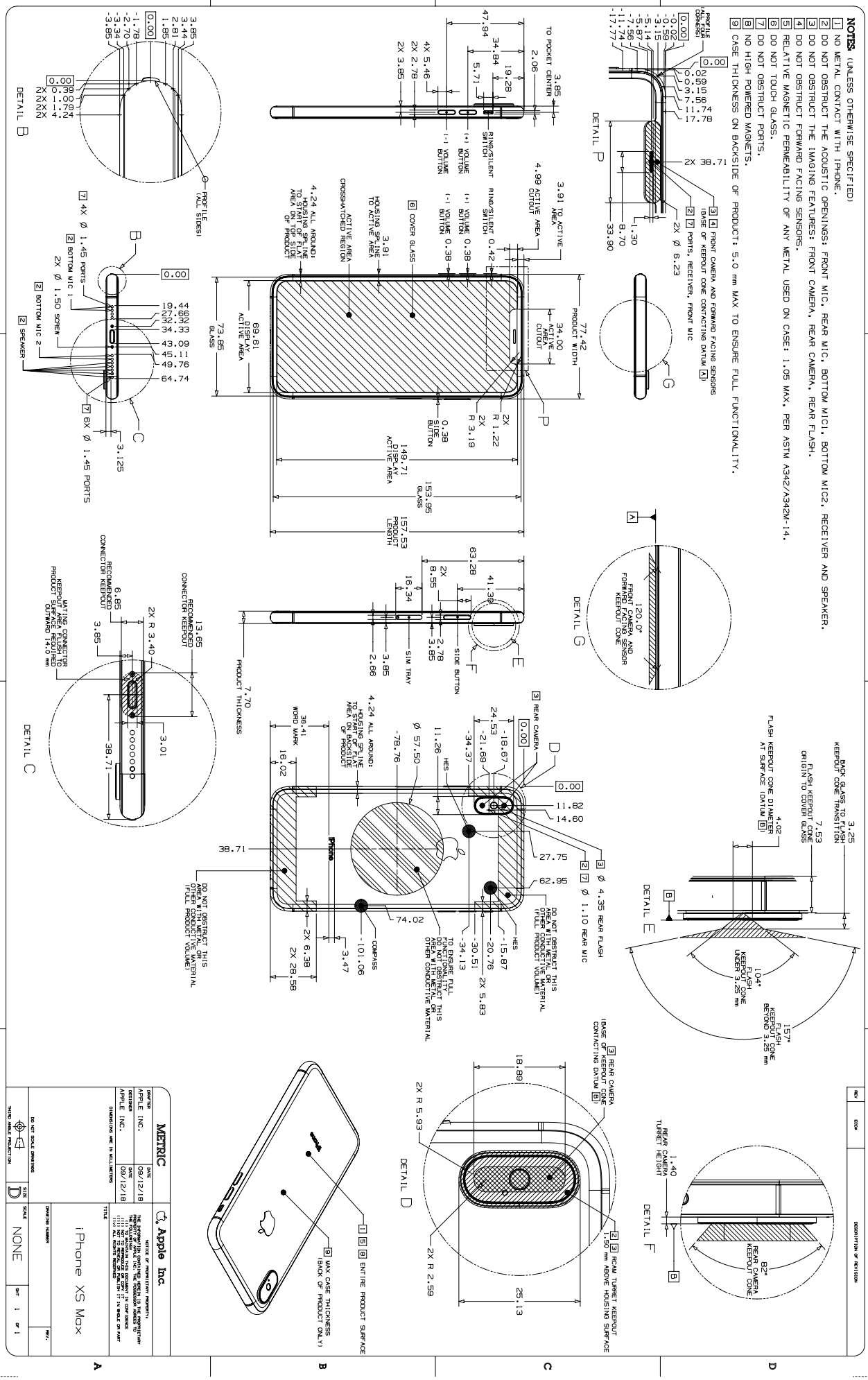
NOTES: (UNLESS OTHERWISE SPECIFIED)
1 NO METAL CONTACT WITH IPHONE.
2 DO NOT OBSTRUCT THE ACOUSTIC OPENINGS: FRONT MIC, REAR MIC, BOTTOM MIC1, BOTTOM MIC2, RECEIVER AND SPEAKER.
3 DO NOT OBSTRUCT THE IMAGING FEATURES: FRONT CAMERA, REAR CAMERA, REAR FLASH.
4 DO NOT OBSTRUCT FORWARD FACING SENSORS.
5 RELATIVE MAGNETIC PERMEABILITY OF ANY METAL USED ON CASE: 1.05 MAX, PER ASTM A342/A342M-14.
6 DO NOT TOUCH GLASS.
7 DO NOT OBSTRUCT PORTS.
8 NO HIGH POWERED MAGNETS.
9 CASE THICKNESS ON BACKSIDE OF PRODUCT: 5.0 mm MAX TO ENSURE FULL FUNCTIONALITY.
DETAIL P
DETAIL G
DETAIL E
DETAIL F
DETAIL D
DETAIL B
DETAIL C
FRONT CAMERA AND FORWARD FACING SENSOR KEEPOUT CONE
BACK GLASS TO FLASH KEEPOUT CONE TRANSITION
FLASH KEEPOUT CONE DIAMETER AT SURFACE (DATUM B)
FLASH KEEPOUT CONE ORIGIN TO COVER GLASS
FLASH KEEPOUT CONE UNDER 3.25 mm
FLASH KEEPOUT CONE BEYOND 3.25 mm
REAR CAMERA TURRET HEIGHT
REAR CAMERA KEEPOUT CONE
REAR CAMERA TURRET KEEPOUT 1.50 mm ABOVE HOUSING SURFACE
MAX CASE THICKNESS (BACK OF PRODUCT ONLY)
ENTIRE PRODUCT SURFACE
DO NOT OBSTRUCT THIS AREA WITH CONDUCTIVE MATERIAL (FULL PRODUCT VOLUME)
DO NOT OBSTRUCT THIS AREA WITH CONDUCTIVE MATERIAL
MATING CONNECTOR KEEPOUT AREA FLUSH TO SURFACE REQUIRED
RECOMMENDED CONNECTOR KEEPOUT
PROFILE (ALL SIDES)
PROFILE AT CORNERS
PRODUCT WIDTH
PRODUCT LENGTH
PRODUCT THICKNESS
ACTIVE AREA CUTOUT
DISPLAY ACTIVE AREA
GLASS
SIDE BUTTON
SIM TRAY
VOLUME BUTTON
RING/SILENT SWITCH
HOUSING SPLINE TO ACTIVE AREA
HOUSING SPLINE TO START OF FLAT AREA ON BACKSIDE OF PRODUCT
4.24 ALL AROUND: HOUSING SPLINE TO START OF FLAT AREA ON TOP SIDE OF PRODUCT
CROSSHATCHED REGION
COVER GLASS
BOTTOM MIC 1
BOTTOM MIC 2
SPEAKER
RECEIVER, FRONT MIC
FRONT CAMERA AND FORWARD FACING SENSORS (BASE OF KEEPOUT CONE CONTACTING DATUM B)
REAR CAMERA (BASE OF KEEPOUT CONE CONTACTING DATUM B)
REAR CAMERA
REAR FLASH
REAR MIC
HES
COMPASS
WORD MARK
METRIC
Apple Inc.
APPLE INC.
iPhone XS Max
NONE
NX GENERATED
DO NOT SCALE DRAWING
THIRD ANGLE PROJECTION

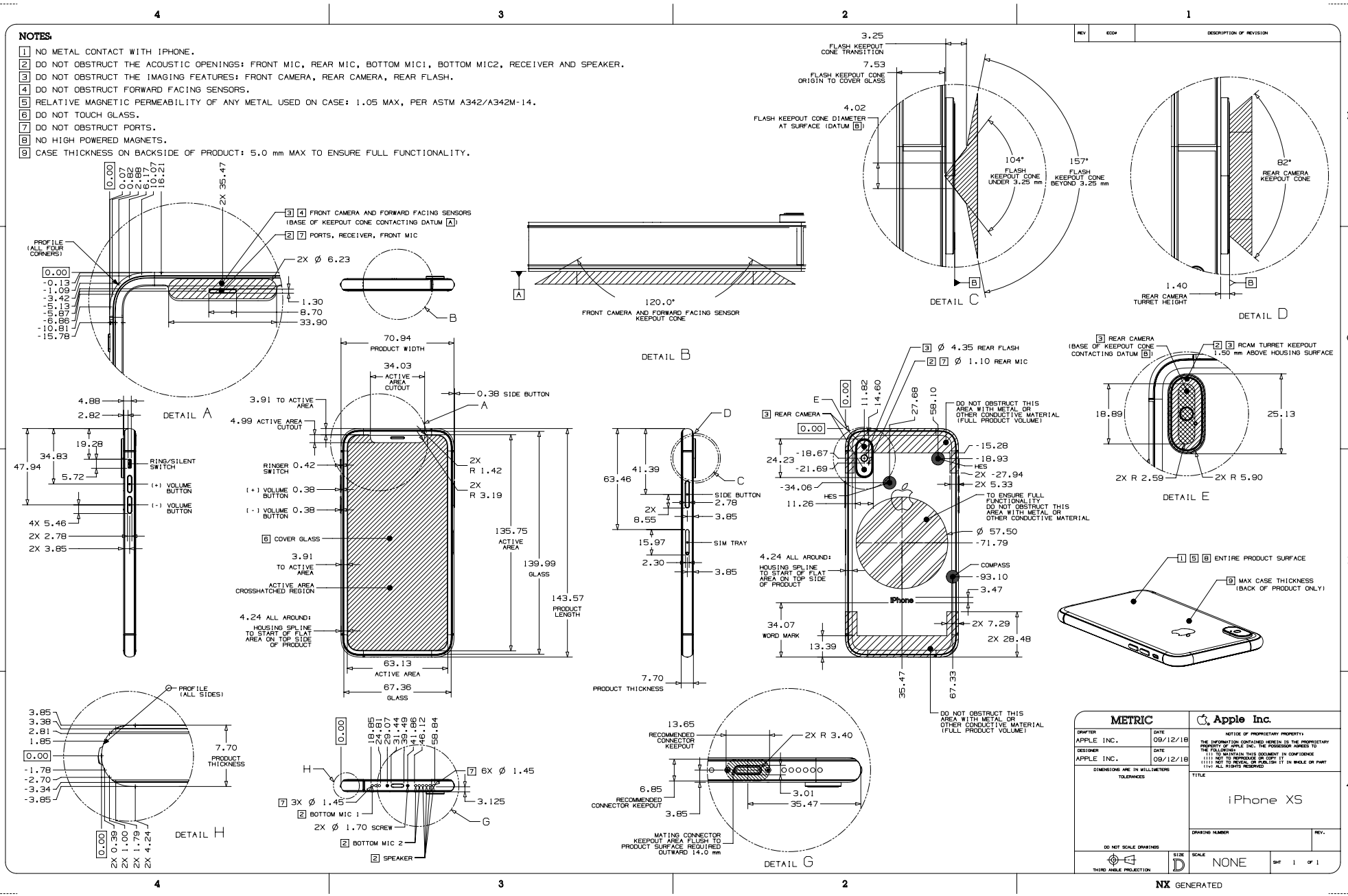
NOTES:
1 NO METAL CONTACT WITH IPHONE.
2 DO NOT OBSTRUCT THE ACOUSTIC OPENINGS: FRONT MIC, REAR MIC, BOTTOM MIC1, BOTTOM MIC2, RECEIVER AND SPEAKER.
3 DO NOT OBSTRUCT THE IMAGING FEATURES: FRONT CAMERA, REAR CAMERA, REAR FLASH.
4 DO NOT OBSTRUCT FORWARD FACING SENSORS.
5 RELATIVE MAGNETIC PERMEABILITY OF ANY METAL USED ON CASE: 1.05 MAX, PER ASTM A342/A342M-14.
6 DO NOT TOUCH GLASS.
7 DO NOT OBSTRUCT PORTS.
8 NO HIGH POWERED MAGNETS.
9 CASE THICKNESS ON BACKSIDE OF PRODUCT: 5.0 mm MAX TO ENSURE FULL FUNCTIONALITY.
DETAIL A
DETAIL B
DETAIL C
DETAIL D
DETAIL E
DETAIL G
DETAIL H
FRONT CAMERA AND FORWARD FACING SENSOR KEEPOUT CONE
REAR CAMERA KEEPOUT CONE
REAR CAMERA TURRET HEIGHT
PRODUCT WIDTH
ACTIVE AREA CUTOUT
SIDE BUTTON
RING/SILENT SWITCH
VOLUME BUTTON
COVER GLASS
ACTIVE AREA
GLASS
PRODUCT LENGTH
PRODUCT THICKNESS
SIM TRAY
REAR CAMERA
REAR FLASH
REAR MIC
HES
COMPASS
WORD MARK
iPhone
BOTTOM MIC 1
BOTTOM MIC 2
SPEAKER
SCREW
MATING CONNECTOR KEEPOUT AREA FLUSH TO PRODUCT SURFACE REQUIRED OUTWARD 14.0 mm
DO NOT OBSTRUCT THIS AREA WITH METAL OR OTHER CONDUCTIVE MATERIAL (FULL PRODUCT VOLUME)
TO ENSURE FULL FUNCTIONALITY DO NOT OBSTRUCT THIS AREA WITH METAL OR OTHER CONDUCTIVE MATERIAL
ENTIRE PRODUCT SURFACE
MAX CASE THICKNESS (BACK OF PRODUCT ONLY)
METRIC
Apple Inc.
APPLE INC.
09/12/18
DIMENSIONS ARE IN MILLIMETERS
TOLERANCES
DO NOT SCALE DRAWING
THIRD ANGLE PROJECTION
NONE
iPhone XS
NX GENERATED

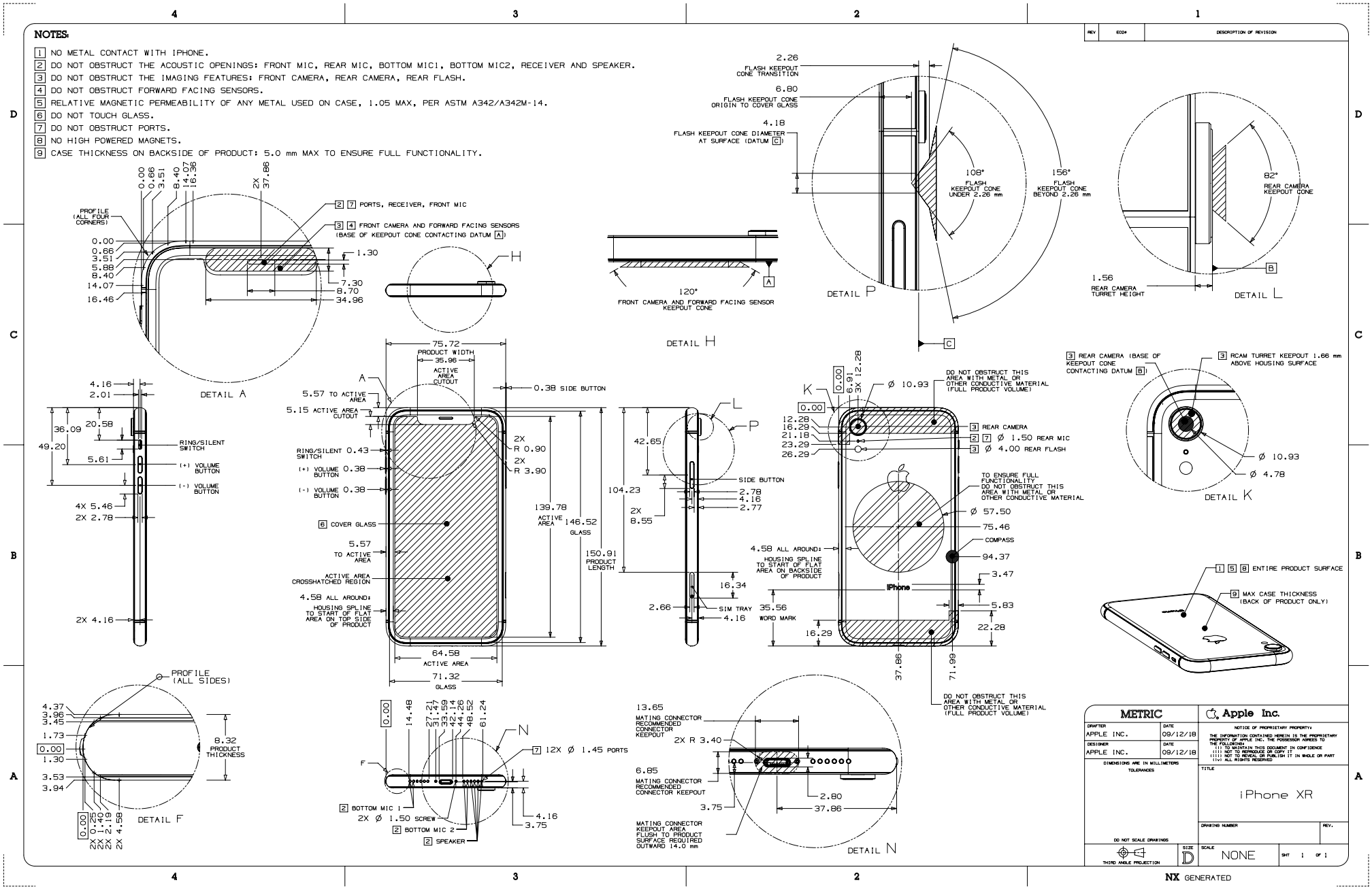
NOTES:
1 NO METAL CONTACT WITH IPHONE.
2 DO NOT OBSTRUCT THE ACOUSTIC OPENINGS: FRONT MIC, REAR MIC, BOTTOM MIC1, BOTTOM MIC2, RECEIVER AND SPEAKER.
3 DO NOT OBSTRUCT THE IMAGING FEATURES: FRONT CAMERA, REAR CAMERA, REAR FLASH.
4 DO NOT OBSTRUCT FORWARD FACING SENSORS.
5 RELATIVE MAGNETIC PERMEABILITY OF ANY METAL USED ON CASE, 1.05 MAX, PER ASTM A342/A342M-14.
6 DO NOT TOUCH GLASS.
7 DO NOT OBSTRUCT PORTS.
8 NO HIGH POWERED MAGNETS.
9 CASE THICKNESS ON BACKSIDE OF PRODUCT: 5.0 mm MAX TO ENSURE FULL FUNCTIONALITY.
DETAIL A
DETAIL H
DETAIL P
DETAIL L
DETAIL K
DETAIL F
DETAIL N
RING/SILENT SWITCH
(+) VOLUME BUTTON
(-) VOLUME BUTTON
SIDE BUTTON
COVER GLASS
ACTIVE AREA
GLASS
PRODUCT WIDTH
PRODUCT LENGTH
SIM TRAY
WORD MARK
REAR CAMERA
REAR MIC
REAR FLASH
COMPASS
iPhone
FRONT CAMERA AND FORWARD FACING SENSOR KEEPOUT CONE
FLASH KEEPOUT CONE TRANSITION
FLASH KEEPOUT CONE ORIGIN TO COVER GLASS
FLASH KEEPOUT CONE DIAMETER AT SURFACE (DATUM C)
FLASH KEEPOUT CONE UNDER 2.26 mm
FLASH KEEPOUT CONE BEYOND 2.26 mm
REAR CAMERA KEEPOUT CONE
REAR CAMERA TURRET HEIGHT
REAR CAMERA TURRET KEEPOUT 1.66 mm ABOVE HOUSING SURFACE
ENTIRE PRODUCT SURFACE
MAX CASE THICKNESS (BACK OF PRODUCT ONLY)
DO NOT OBSTRUCT THIS AREA WITH METAL OR OTHER CONDUCTIVE MATERIAL (FULL PRODUCT VOLUME)
TO ENSURE FULL FUNCTIONALITY DO NOT OBSTRUCT THIS AREA WITH METAL OR OTHER CONDUCTIVE MATERIAL
HOUSING SPLINE TO START OF FLAT AREA ON BACKSIDE OF PRODUCT
HOUSING SPLINE TO START OF FLAT AREA ON TOP SIDE OF PRODUCT
MATING CONNECTOR RECOMMENDED CONNECTOR KEEPOUT
MATING CONNECTOR KEEPOUT AREA FLUSH TO PRODUCT SURFACE REQUIRED OUTWARD 14.0 mm
BOTTOM MIC 1
BOTTOM MIC 2
SPEAKER
REV
ECO#
DESCRIPTION OF REVISION
METRIC
Apple Inc.
DRAFTER APPLE INC. 09/12/18
DESIGNER APPLE INC. 09/12/18
DIMENSIONS ARE IN MILLIMETERS
TOLERANCES
DO NOT SCALE DRAWING
THIRD ANGLE PROJECTION
NOTICE OF PROPRIETARY PROPERTY
THE INFORMATION CONTAINED HEREIN IS THE PROPRIETARY PROPERTY OF APPLE INC. THE POSSESSOR AGREES TO THE FOLLOWING:
(i) TO MAINTAIN THIS DOCUMENT IN CONFIDENCE
(ii) NOT TO REPRODUCE OR COPY IT
(iii) NOT TO REVEAL OR PUBLISH IT IN WHOLE OR PART
(iv) ALL RIGHTS RESERVED
TITLE
iPhone XR
DRAWING NUMBER
REV.
SIZE D
SCALE NONE
SHT 1 OF 1
NX GENERATED

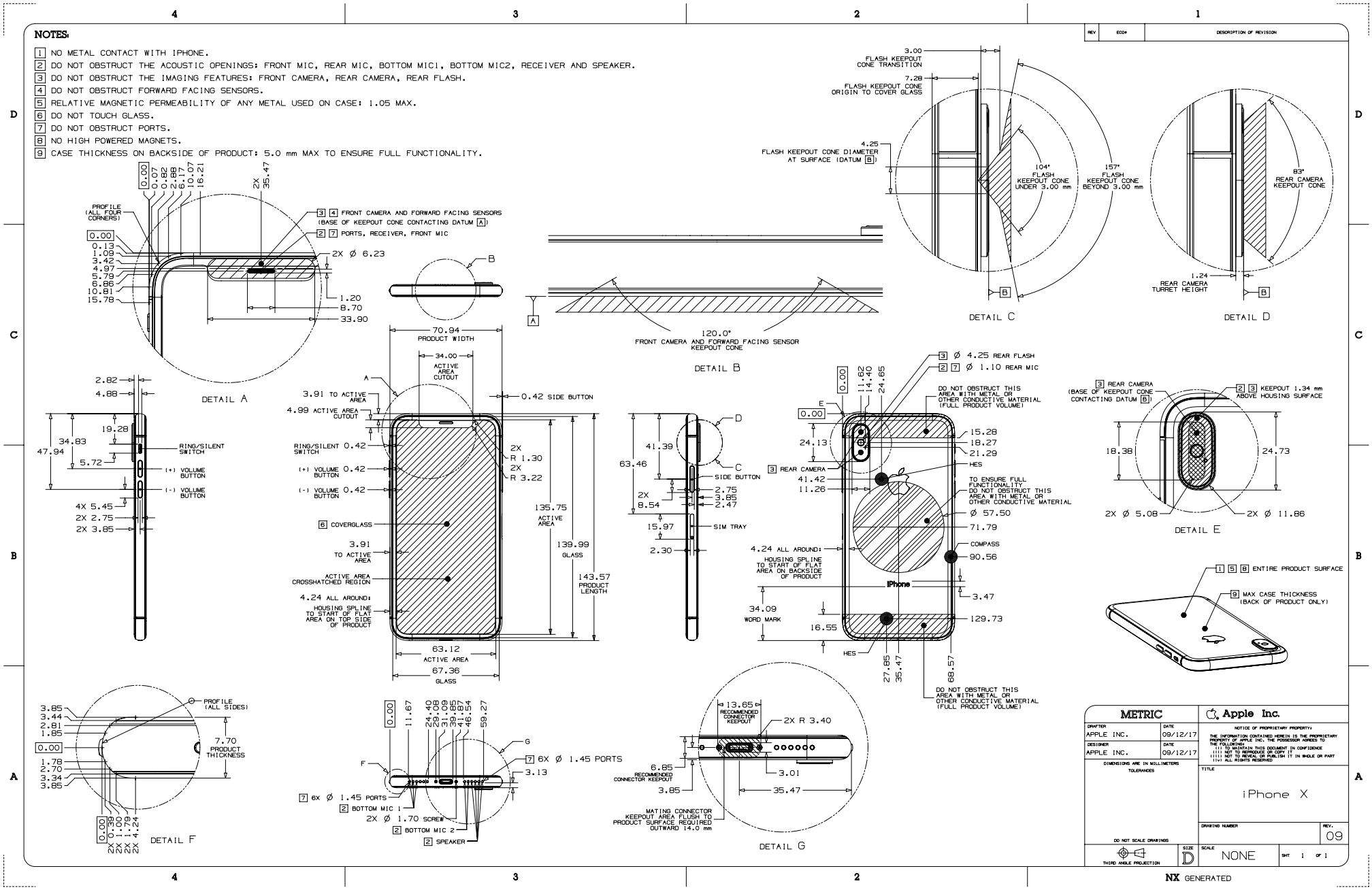
NOTES:
1 NO METAL CONTACT WITH IPHONE.
2 DO NOT OBSTRUCT THE ACOUSTIC OPENINGS: FRONT MIC, REAR MIC, BOTTOM MIC1, BOTTOM MIC2, RECEIVER AND SPEAKER.
3 DO NOT OBSTRUCT THE IMAGING FEATURES: FRONT CAMERA, REAR CAMERA, REAR FLASH.
4 DO NOT OBSTRUCT FORWARD FACING SENSORS.
5 RELATIVE MAGNETIC PERMEABILITY OF ANY METAL USED ON CASE: 1.05 MAX.
6 DO NOT TOUCH GLASS.
7 DO NOT OBSTRUCT PORTS.
8 NO HIGH POWERED MAGNETS.
9 CASE THICKNESS ON BACKSIDE OF PRODUCT: 5.0 mm MAX TO ENSURE FULL FUNCTIONALITY.
DETAIL A
DETAIL B
DETAIL C
DETAIL D
DETAIL E
DETAIL F
DETAIL G
FRONT CAMERA AND FORWARD FACING SENSOR KEEPOUT CONE
FLASH KEEPOUT CONE TRANSITION
FLASH KEEPOUT CONE ORIGIN TO COVER GLASS
FLASH KEEPOUT CONE DIAMETER AT SURFACE (DATUM B)
104° FLASH KEEPOUT CONE UNDER 3.00 mm
157° FLASH KEEPOUT CONE BEYOND 3.00 mm
83° REAR CAMERA KEEPOUT CONE
REAR CAMERA TURRET HEIGHT
PROFILE (ALL FOUR CORNERS)
FRONT CAMERA AND FORWARD FACING SENSORS (BASE OF KEEPOUT CONE CONTACTING DATUM A)
PORTS, RECEIVER, FRONT MIC
PRODUCT WIDTH
ACTIVE AREA CUTOUT
SIDE BUTTON
RING/SILENT SWITCH
(+) VOLUME BUTTON
(-) VOLUME BUTTON
COVERGLASS
ACTIVE AREA CROSSHATCHED REGION
HOUSING SPLINE TO START OF FLAT AREA ON TOP SIDE OF PRODUCT
HOUSING SPLINE TO START OF FLAT AREA ON BACKSIDE OF PRODUCT
PRODUCT LENGTH
GLASS
SIM TRAY
REAR FLASH
REAR MIC
REAR CAMERA
DO NOT OBSTRUCT THIS AREA WITH METAL OR OTHER CONDUCTIVE MATERIAL (FULL PRODUCT VOLUME)
TO ENSURE FULL FUNCTIONALITY DO NOT OBSTRUCT THIS AREA WITH METAL OR OTHER CONDUCTIVE MATERIAL
COMPASS
WORD MARK
HES
KEEPOUT 1.34 mm ABOVE HOUSING SURFACE
ENTIRE PRODUCT SURFACE
MAX CASE THICKNESS (BACK OF PRODUCT ONLY)
BOTTOM MIC 1
BOTTOM MIC 2
SPEAKER
RECOMMENDED CONNECTOR KEEPOUT
RECOMMENDED CONNECTOR KEEPOUT
MATING CONNECTOR KEEPOUT AREA FLUSH TO PRODUCT SURFACE REQUIRED OUTWARD 14.0 mm
METRIC
Apple Inc.
DRAFTER APPLE INC. 09/12/17
DESIGNER APPLE INC. 09/12/17
DIMENSIONS ARE IN MILLIMETERS
TOLERANCES
DO NOT SCALE DRAWINGS
THIRD ANGLE PROJECTION
NOTICE OF PROPRIETARY PROPERTY:
THE INFORMATION CONTAINED HEREIN IS THE PROPRIETARY PROPERTY OF APPLE INC. THE POSSESSOR AGREES TO THE FOLLOWING:
(i) TO MAINTAIN THIS DOCUMENT IN CONFIDENCE
(ii) NOT TO REPRODUCE OR COPY IT
(iii) NOT TO REVEAL OR PUBLISH IT IN WHOLE OR PART
(iv) ALL RIGHTS RESERVED
TITLE
iPhone X
DRAWING NUMBER
REV. 09
SIZE D
SCALE NONE
SHT 1 OF 1
NX GENERATED

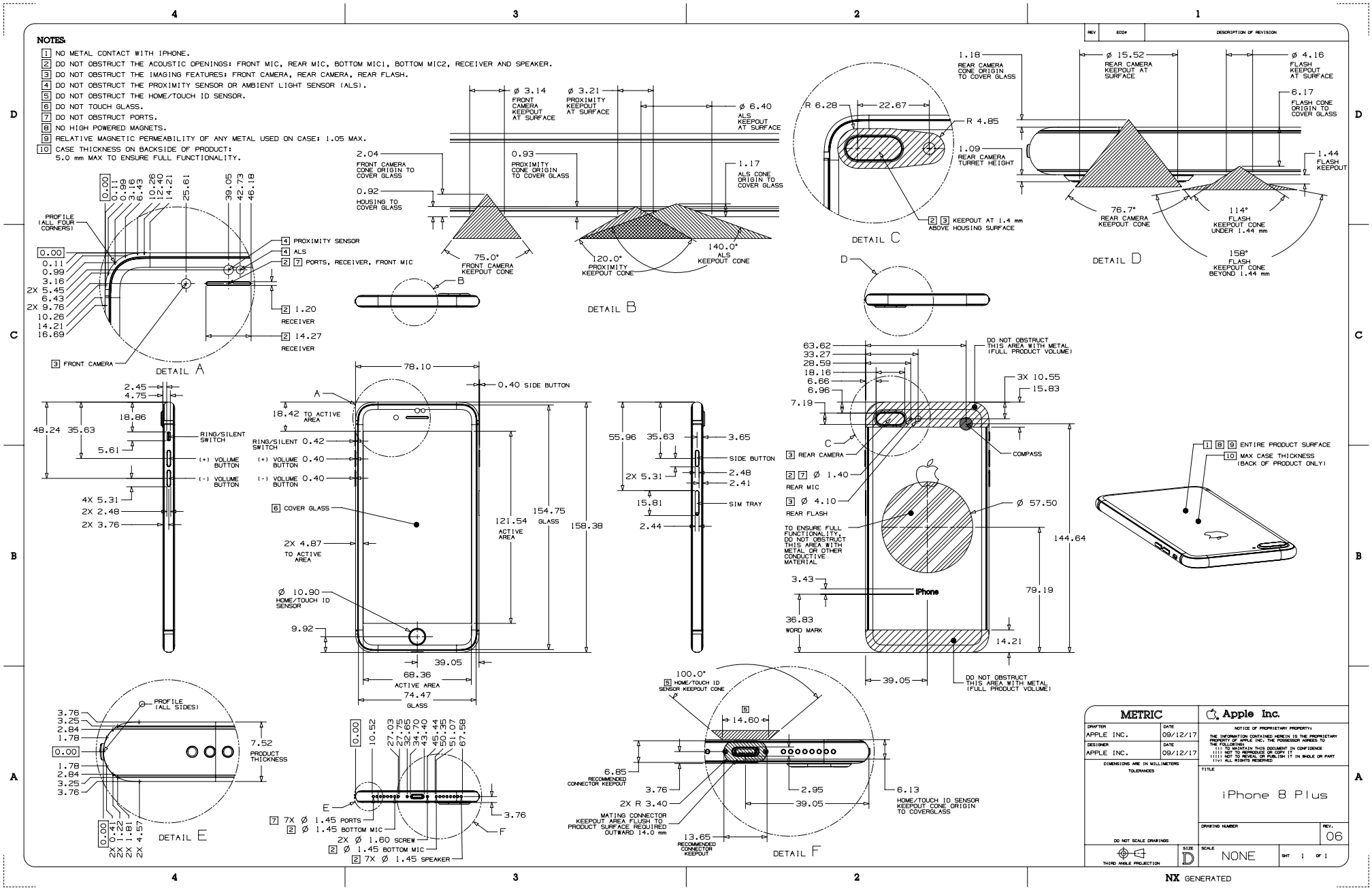
NOTES:
1 NO METAL CONTACT WITH IPHONE.
2 DO NOT OBSTRUCT THE ACOUSTIC OPENINGS: FRONT MIC, REAR MIC, BOTTOM MIC1, BOTTOM MIC2, RECEIVER AND SPEAKER.
3 DO NOT OBSTRUCT THE IMAGING FEATURES: FRONT CAMERA, REAR CAMERA, REAR FLASH.
4 DO NOT OBSTRUCT THE PROXIMITY SENSOR OR AMBIENT LIGHT SENSOR (ALS).
5 DO NOT OBSTRUCT THE HOME/TOUCH ID SENSOR.
6 DO NOT TOUCH GLASS.
7 DO NOT OBSTRUCT PORTS.
8 NO HIGH POWERED MAGNETS.
9 RELATIVE MAGNETIC PERMEABILITY OF ANY METAL USED ON CASE: 1.05 MAX.
10 CASE THICKNESS ON BACKSIDE OF PRODUCT: 5.0 mm MAX TO ENSURE FULL FUNCTIONALITY.
DETAIL A
DETAIL B
DETAIL C
DETAIL D
DETAIL E
DETAIL F
iPhone
METRIC
Apple Inc.
iPhone 8 Plus
NX GENERATED

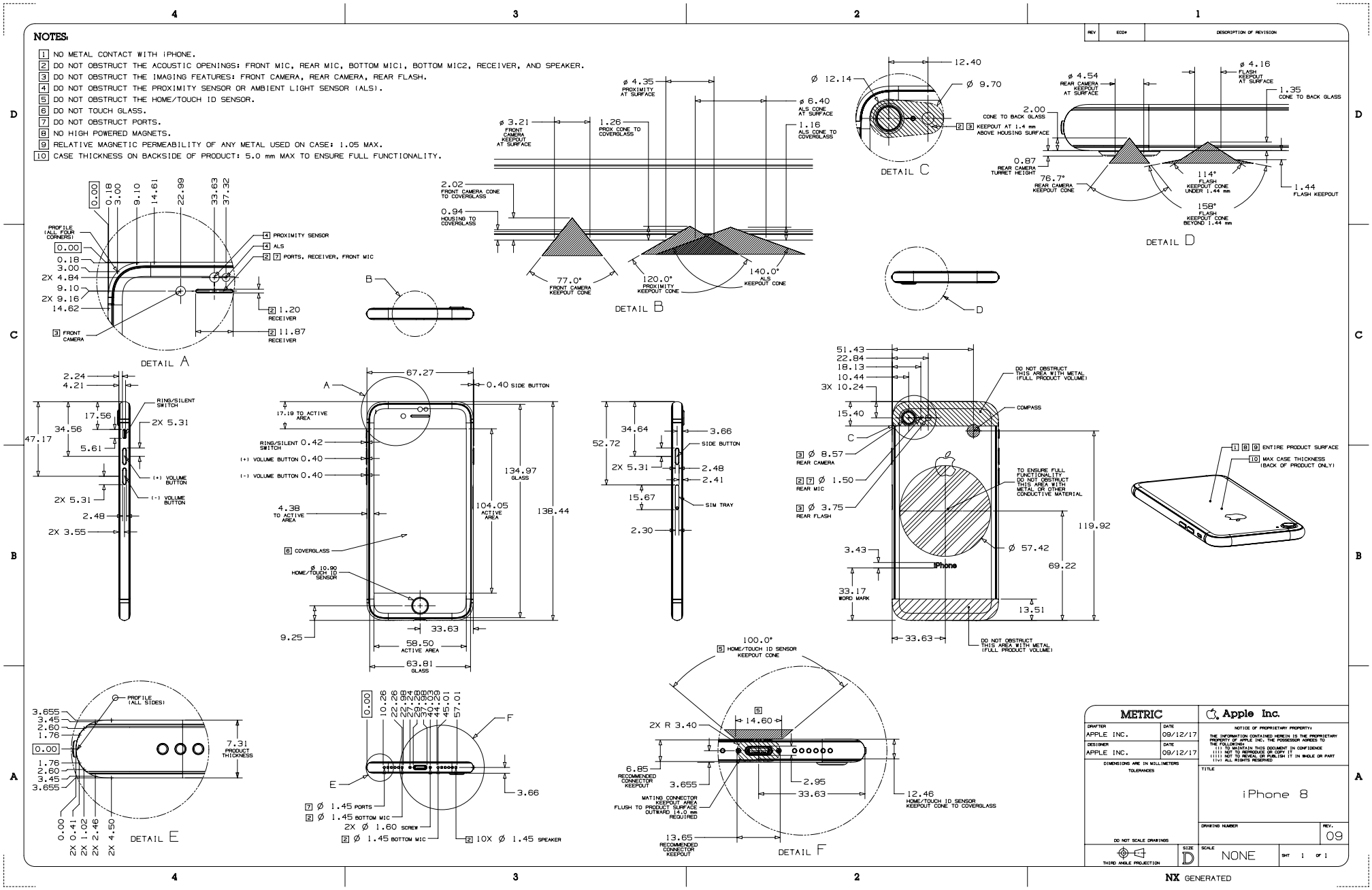
NOTES:
1 NO METAL CONTACT WITH iPHONE.
2 DO NOT OBSTRUCT THE ACOUSTIC OPENINGS: FRONT MIC, REAR MIC, BOTTOM MIC1, BOTTOM MIC2, RECEIVER, AND SPEAKER.
3 DO NOT OBSTRUCT THE IMAGING FEATURES: FRONT CAMERA, REAR CAMERA, REAR FLASH.
4 DO NOT OBSTRUCT THE PROXIMITY SENSOR OR AMBIENT LIGHT SENSOR (ALS).
5 DO NOT OBSTRUCT THE HOME/TOUCH ID SENSOR.
6 DO NOT TOUCH GLASS.
7 DO NOT OBSTRUCT PORTS.
8 NO HIGH POWERED MAGNETS.
9 RELATIVE MAGNETIC PERMEABILITY OF ANY METAL USED ON CASE: 1.05 MAX.
10 CASE THICKNESS ON BACKSIDE OF PRODUCT: 5.0 mm MAX TO ENSURE FULL FUNCTIONALITY.
DETAIL A
DETAIL B
DETAIL C
DETAIL D
DETAIL E
DETAIL F
METRIC
Apple Inc.
iPhone 8
NX GENERATED

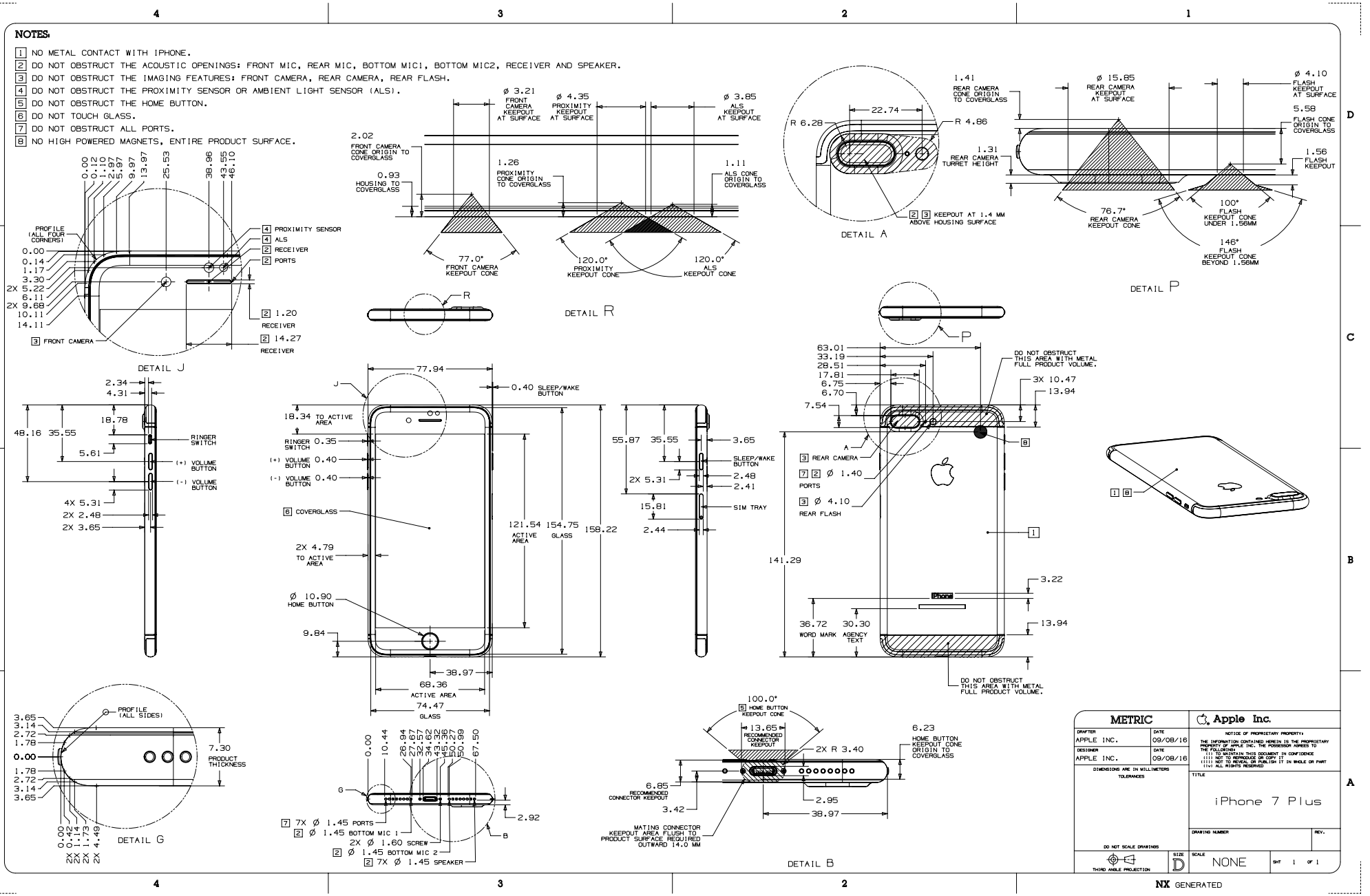
NOTES:
1 NO METAL CONTACT WITH IPHONE.
2 DO NOT OBSTRUCT THE ACOUSTIC OPENINGS: FRONT MIC, REAR MIC, BOTTOM MIC1, BOTTOM MIC2, RECEIVER AND SPEAKER.
3 DO NOT OBSTRUCT THE IMAGING FEATURES: FRONT CAMERA, REAR CAMERA, REAR FLASH.
4 DO NOT OBSTRUCT THE PROXIMITY SENSOR OR AMBIENT LIGHT SENSOR (ALS).
5 DO NOT OBSTRUCT THE HOME BUTTON.
6 DO NOT TOUCH GLASS.
7 DO NOT OBSTRUCT ALL PORTS.
8 NO HIGH POWERED MAGNETS, ENTIRE PRODUCT SURFACE.
DETAIL J
DETAIL R
DETAIL A
DETAIL P
DETAIL G
DETAIL B
METRIC
Apple Inc.
APPLE INC.
09/08/16
iPhone 7 Plus
NONE
NX GENERATED

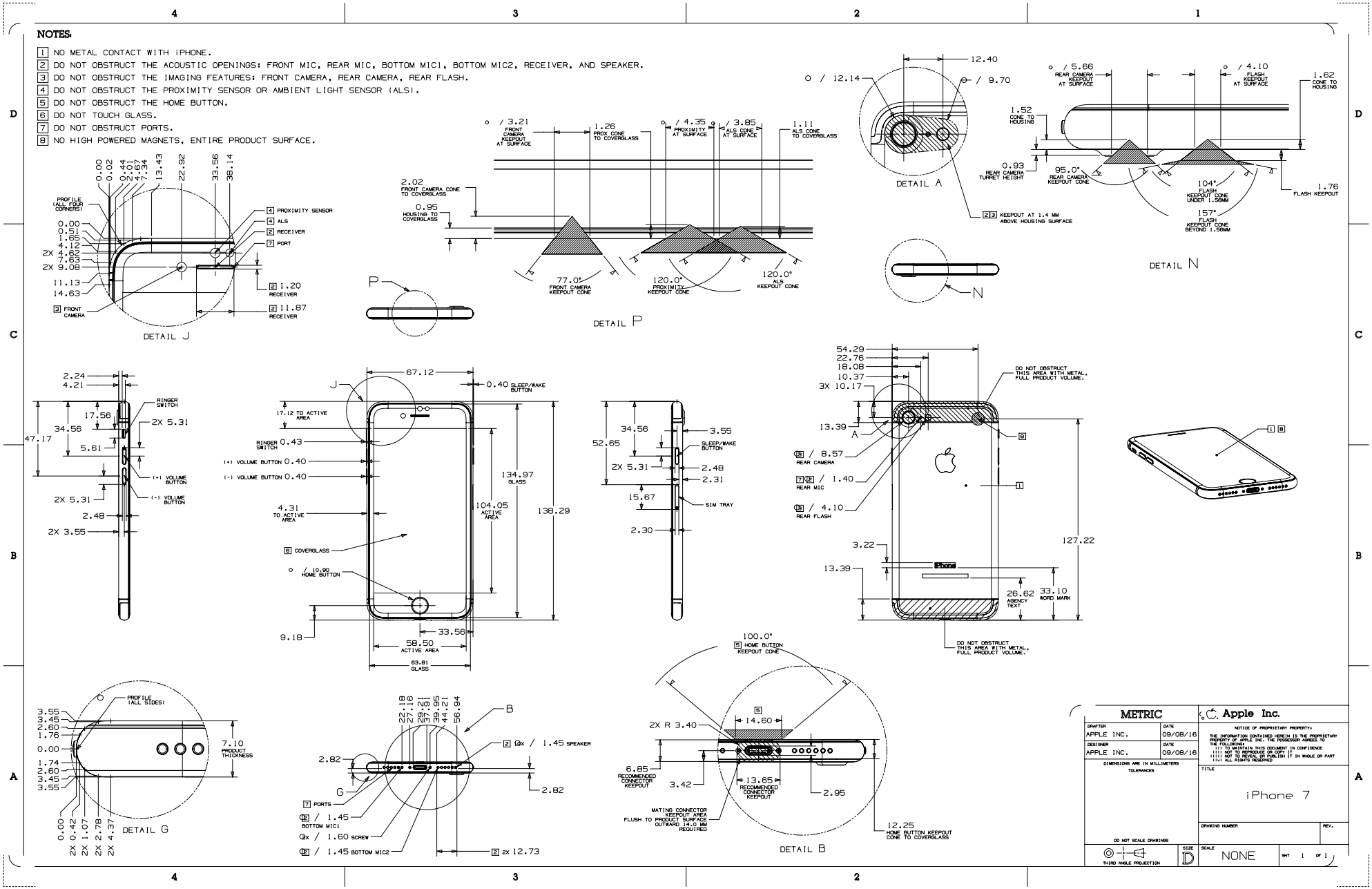
NOTES:
1 NO METAL CONTACT WITH iPHONE.
2 DO NOT OBSTRUCT THE ACOUSTIC OPENINGS: FRONT MIC, REAR MIC, BOTTOM MIC1, BOTTOM MIC2, RECEIVER, AND SPEAKER.
3 DO NOT OBSTRUCT THE IMAGING FEATURES: FRONT CAMERA, REAR CAMERA, REAR FLASH.
4 DO NOT OBSTRUCT THE PROXIMITY SENSOR OR AMBIENT LIGHT SENSOR (ALS).
5 DO NOT OBSTRUCT THE HOME BUTTON.
6 DO NOT TOUCH GLASS.
7 DO NOT OBSTRUCT PORTS.
8 NO HIGH POWERED MAGNETS, ENTIRE PRODUCT SURFACE.
DETAIL J
DETAIL P
DETAIL A
DETAIL N
DETAIL G
DETAIL B
METRIC
Apple Inc.
APPLE INC.
09/08/16
iPhone 7
NONE

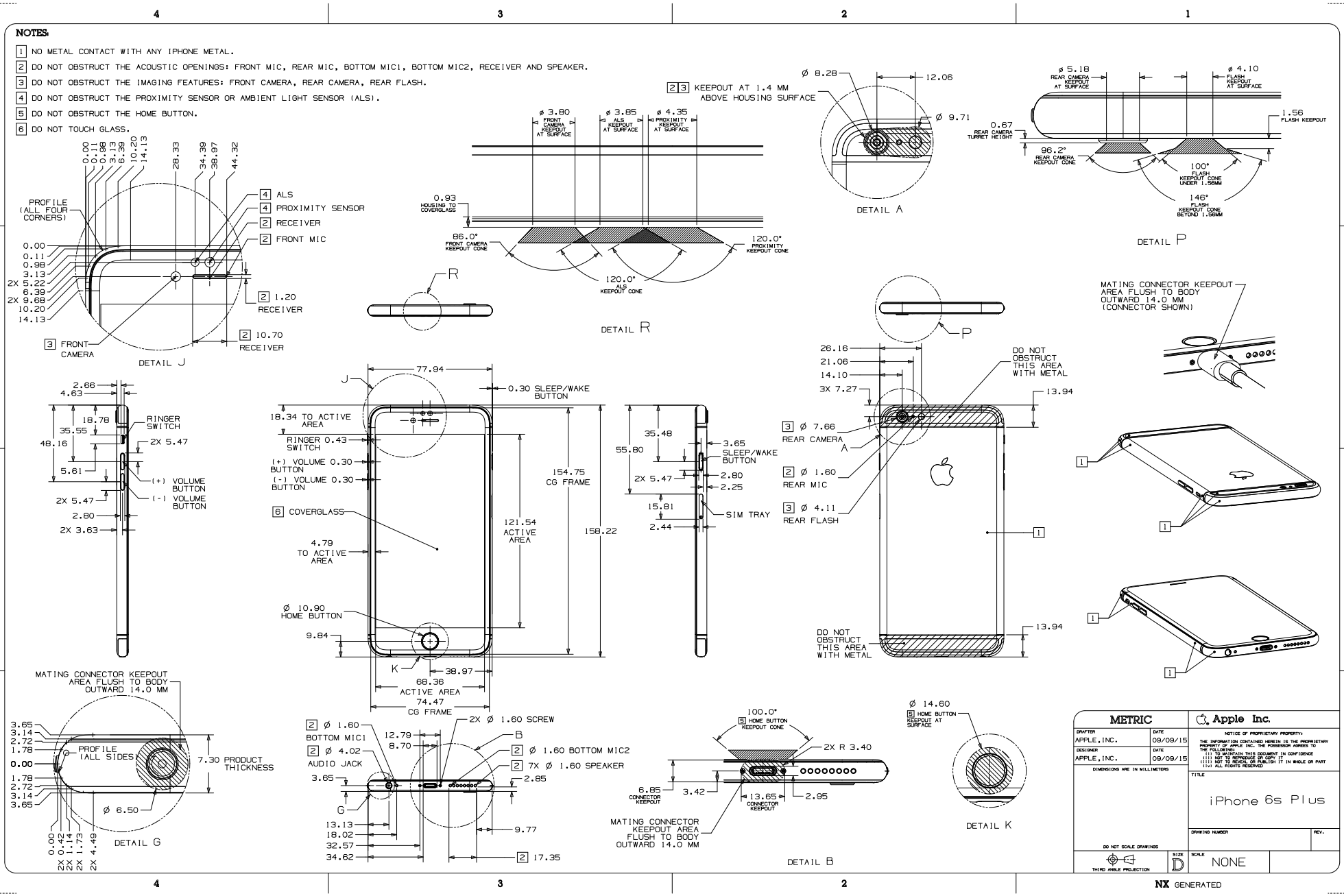
NOTES:
1 NO METAL CONTACT WITH ANY IPHONE METAL.
2 DO NOT OBSTRUCT THE ACOUSTIC OPENINGS: FRONT MIC, REAR MIC, BOTTOM MIC1, BOTTOM MIC2, RECEIVER AND SPEAKER.
3 DO NOT OBSTRUCT THE IMAGING FEATURES: FRONT CAMERA, REAR CAMERA, REAR FLASH.
4 DO NOT OBSTRUCT THE PROXIMITY SENSOR OR AMBIENT LIGHT SENSOR (ALS).
5 DO NOT OBSTRUCT THE HOME BUTTON.
6 DO NOT TOUCH GLASS.
DETAIL J
DETAIL R
DETAIL A
DETAIL P
DETAIL G
DETAIL B
DETAIL K
METRIC
Apple Inc.
iPhone 6s Plus
NONE
NX GENERATED

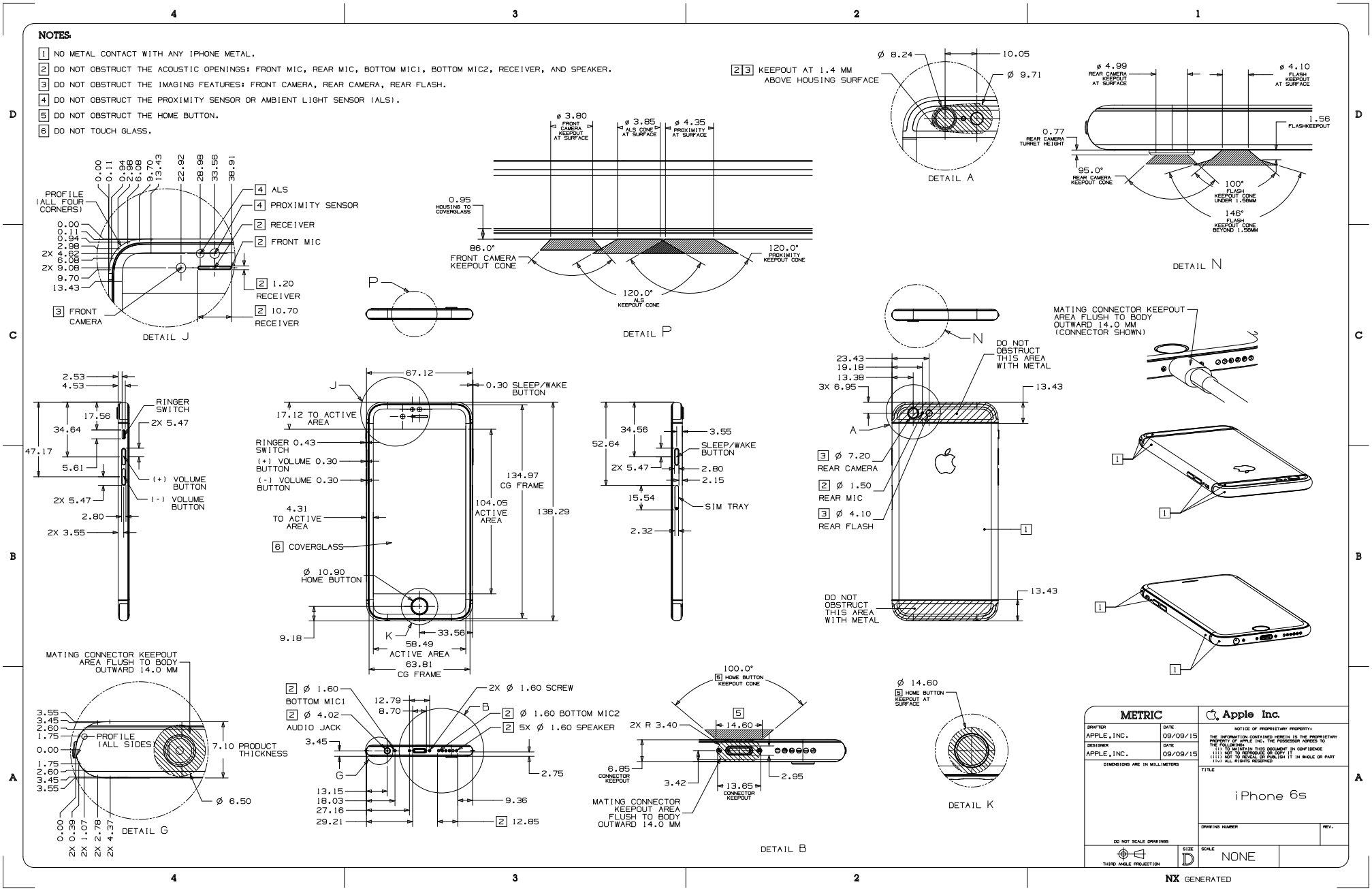
NOTES:
1 NO METAL CONTACT WITH ANY IPHONE METAL.
2 DO NOT OBSTRUCT THE ACOUSTIC OPENINGS: FRONT MIC, REAR MIC, BOTTOM MIC1, BOTTOM MIC2, RECEIVER, AND SPEAKER.
3 DO NOT OBSTRUCT THE IMAGING FEATURES: FRONT CAMERA, REAR CAMERA, REAR FLASH.
4 DO NOT OBSTRUCT THE PROXIMITY SENSOR OR AMBIENT LIGHT SENSOR (ALS).
5 DO NOT OBSTRUCT THE HOME BUTTON.
6 DO NOT TOUCH GLASS.
DETAIL J
DETAIL P
DETAIL A
DETAIL N
DETAIL G
DETAIL B
DETAIL K
METRIC
Apple Inc.
iPhone 6s
NONE
NX GENERATED

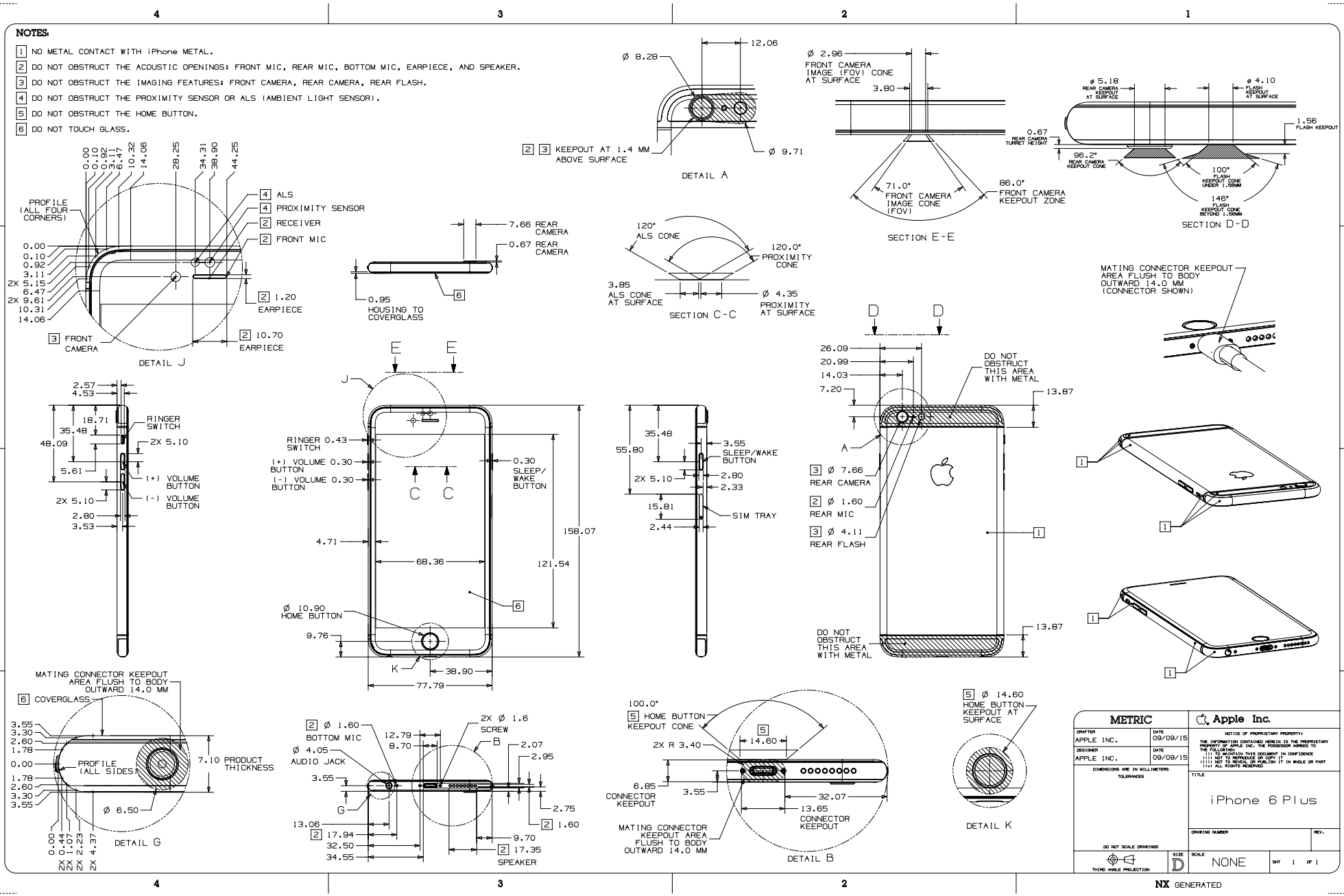
NOTES:
1 NO METAL CONTACT WITH iPhone METAL.
2 DO NOT OBSTRUCT THE ACOUSTIC OPENINGS: FRONT MIC, REAR MIC, BOTTOM MIC, EARPIECE, AND SPEAKER.
3 DO NOT OBSTRUCT THE IMAGING FEATURES: FRONT CAMERA, REAR CAMERA, REAR FLASH.
4 DO NOT OBSTRUCT THE PROXIMITY SENSOR OR ALS (AMBIENT LIGHT SENSOR).
5 DO NOT OBSTRUCT THE HOME BUTTON.
6 DO NOT TOUCH GLASS.
DETAIL A
SECTION E-E
SECTION D-D
SECTION C-C
DETAIL J
DETAIL G
DETAIL B
DETAIL K
SPEAKER
METRIC
Apple Inc.
iPhone 6 Plus
NONE
NX GENERATED

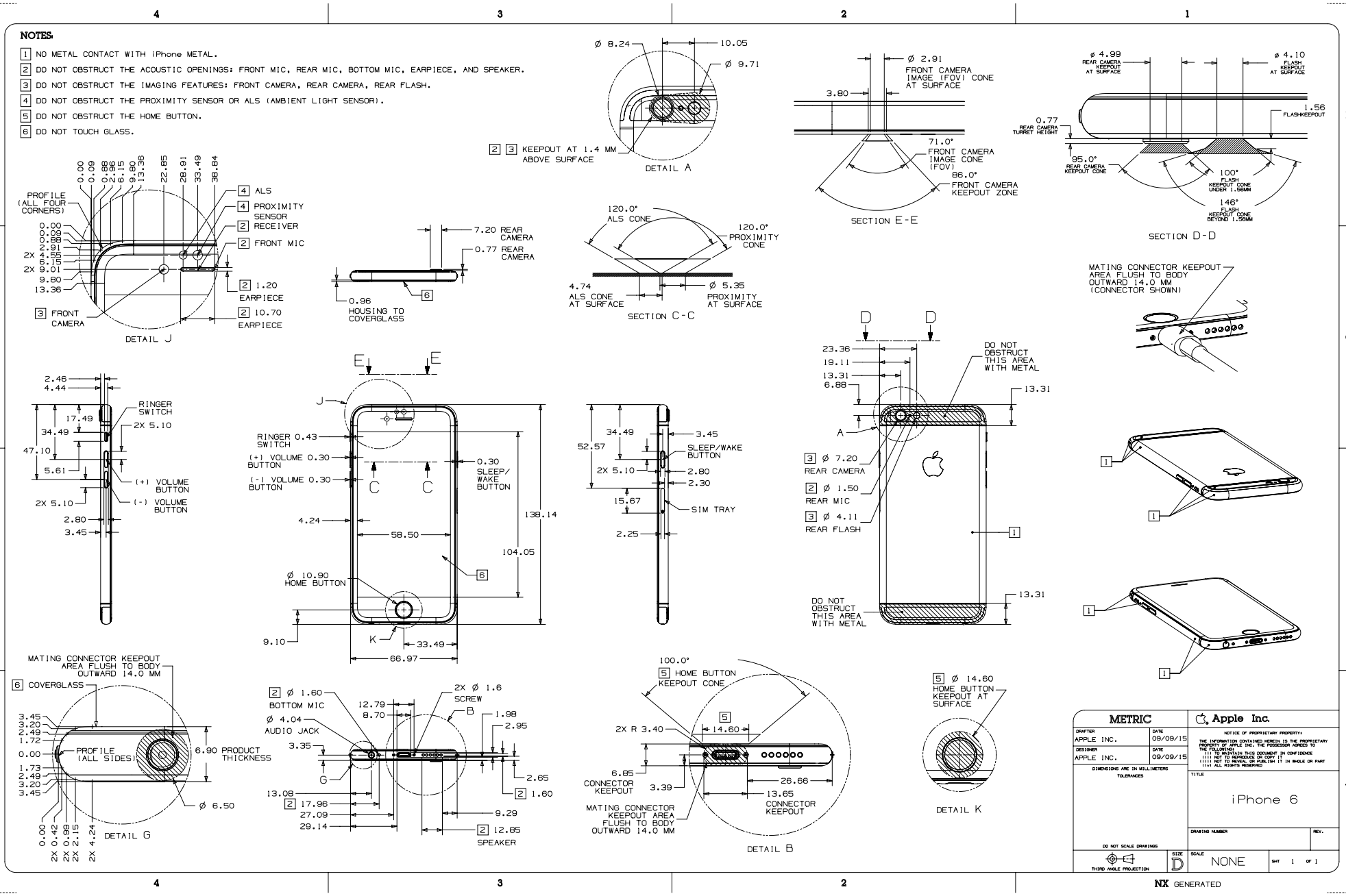
NOTES:
1 NO METAL CONTACT WITH iPhone METAL.
2 DO NOT OBSTRUCT THE ACOUSTIC OPENINGS: FRONT MIC, REAR MIC, BOTTOM MIC, EARPIECE, AND SPEAKER.
3 DO NOT OBSTRUCT THE IMAGING FEATURES: FRONT CAMERA, REAR CAMERA, REAR FLASH.
4 DO NOT OBSTRUCT THE PROXIMITY SENSOR OR ALS (AMBIENT LIGHT SENSOR).
5 DO NOT OBSTRUCT THE HOME BUTTON.
6 DO NOT TOUCH GLASS.
DETAIL A
DETAIL J
SECTION E-E
SECTION C-C
SECTION D-D
DETAIL G
DETAIL B
DETAIL K
METRIC
Apple Inc.
iPhone 6
NX GENERATED

56.57 iPhone 5s 和 iPhone SE

[英语]

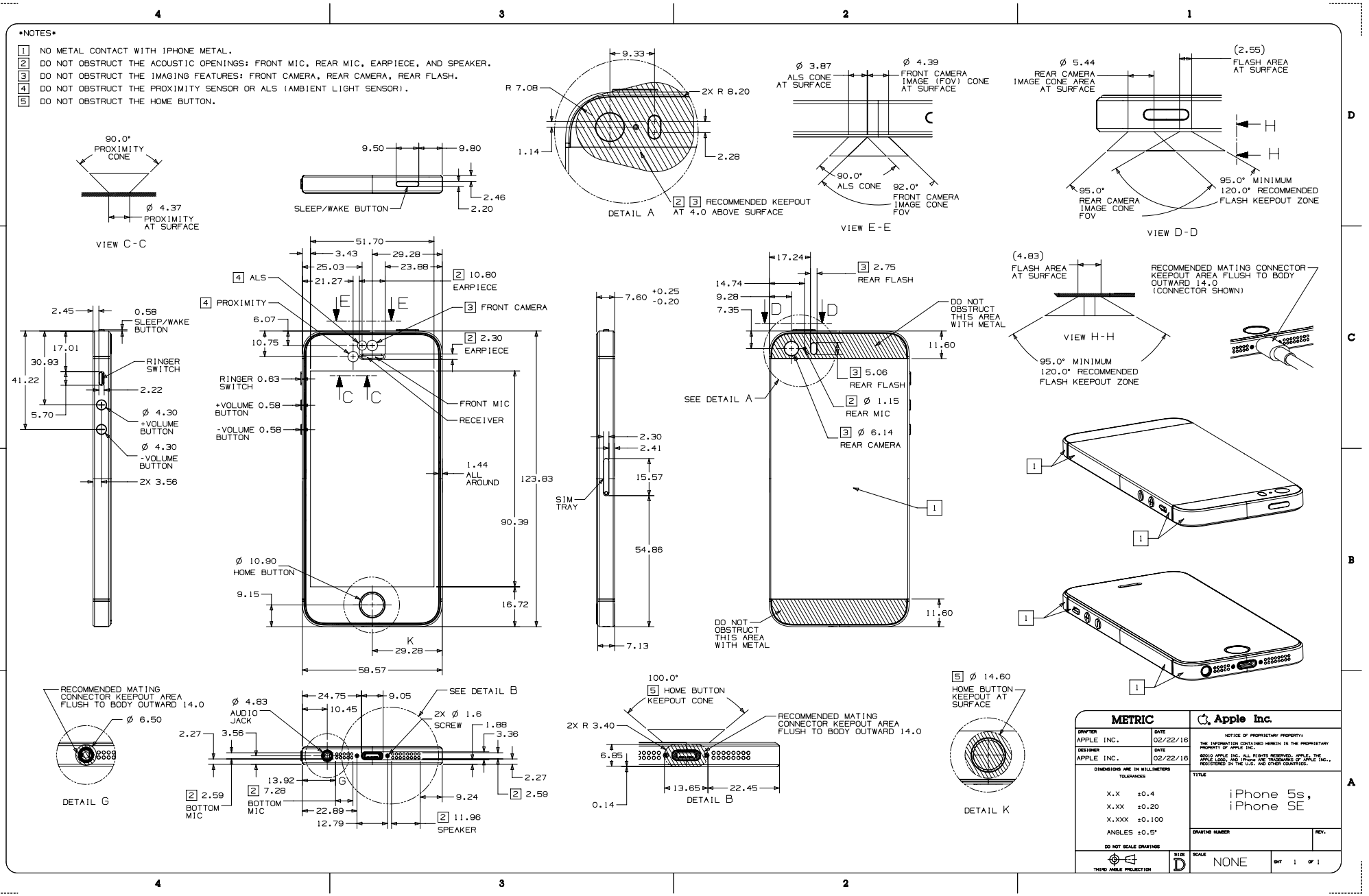

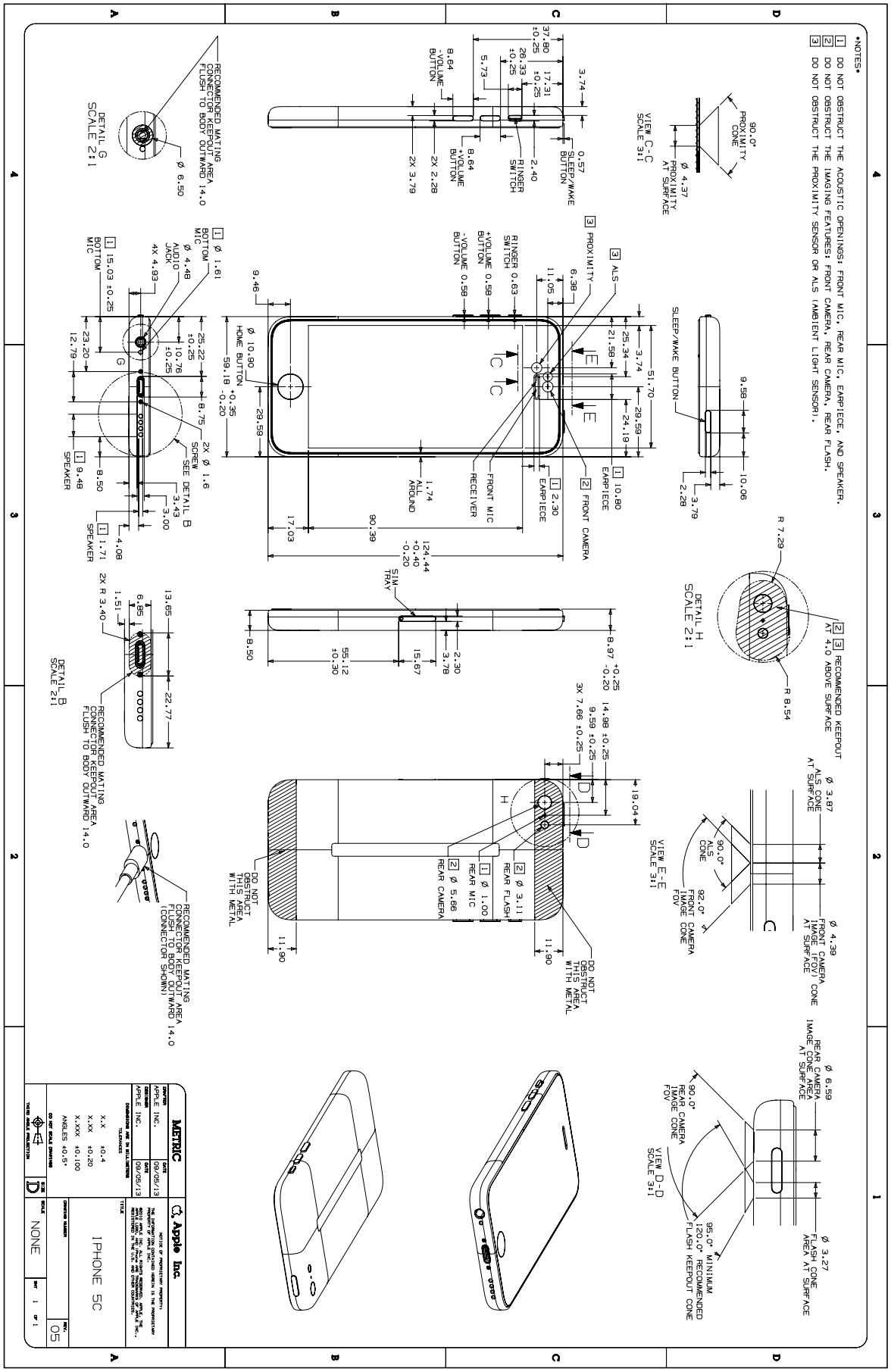
•NOTES•
1 DO NOT OBSTRUCT THE ACOUSTIC OPENINGS: FRONT MIC, REAR MIC, EARPIECE, AND SPEAKER.
2 DO NOT OBSTRUCT THE IMAGING FEATURES: FRONT CAMERA, REAR CAMERA, REAR FLASH.
3 DO NOT OBSTRUCT THE PROXIMITY SENSOR OR ALS (AMBIENT LIGHT SENSOR).
VIEW C-C SCALE 3:1
SLEEP/WAKE BUTTON
DETAIL H SCALE 2:1
VIEW E-E SCALE 3:1
DETAIL G SCALE 2:1
DETAIL B SCALE 2:1
VIEW D-D SCALE 3:1
METRIC
Apple Inc.
IPHONE 5C
NONE
05

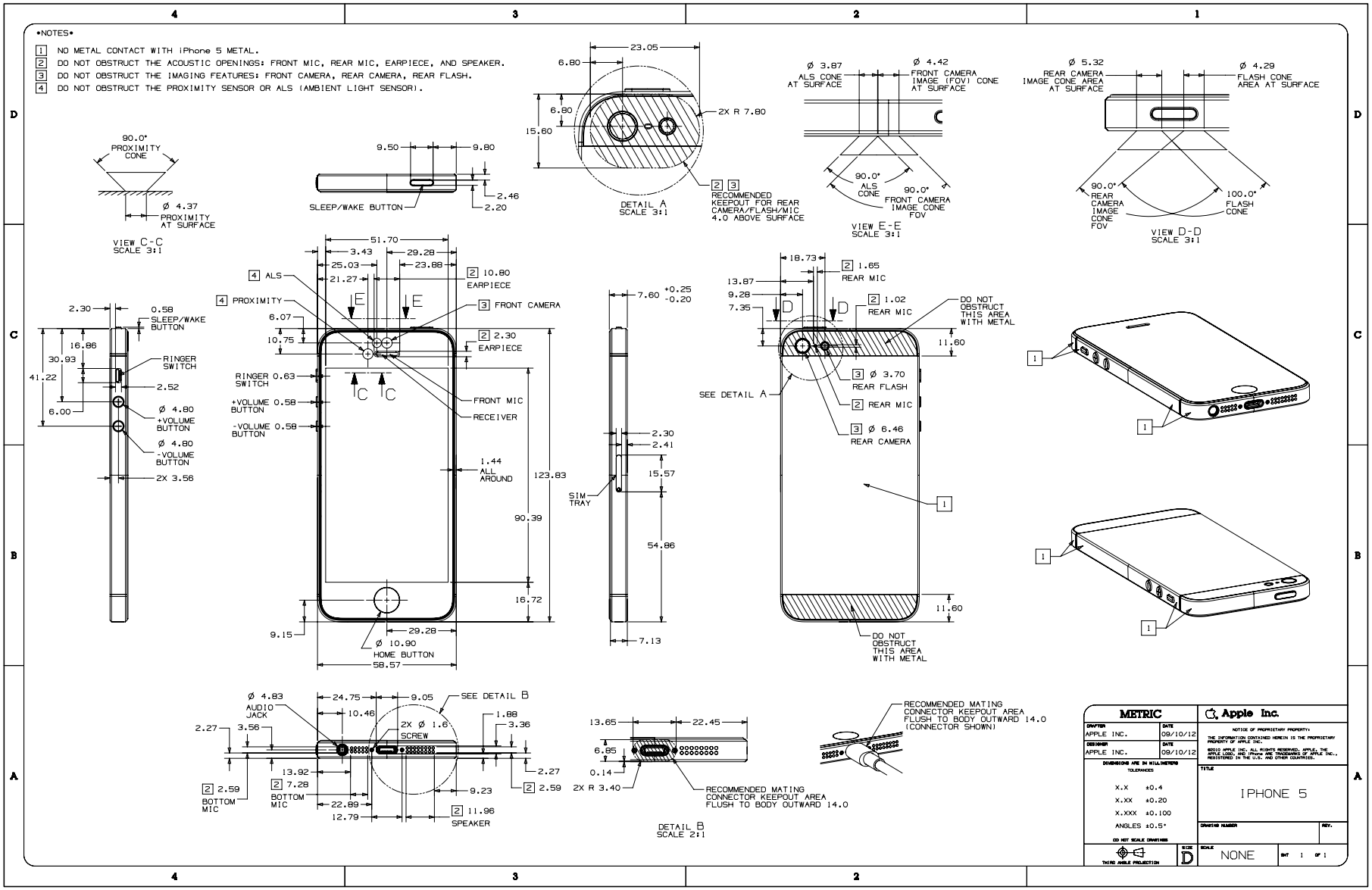
•NOTES•
1 NO METAL CONTACT WITH iPhone 5 METAL.
2 DO NOT OBSTRUCT THE ACOUSTIC OPENINGS: FRONT MIC, REAR MIC, EARPIECE, AND SPEAKER.
3 DO NOT OBSTRUCT THE IMAGING FEATURES: FRONT CAMERA, REAR CAMERA, REAR FLASH.
4 DO NOT OBSTRUCT THE PROXIMITY SENSOR OR ALS (AMBIENT LIGHT SENSOR).
90.0° PROXIMITY CONE
Ø 4.37 PROXIMITY AT SURFACE
VIEW C-C SCALE 3:1
SLEEP/WAKE BUTTON
DETAIL A SCALE 3:1
2X R 7.80
RECOMMENDED KEEPOUT FOR REAR CAMERA/FLASH/MIC 4.0 ABOVE SURFACE
Ø 3.87 ALS CONE AT SURFACE
Ø 4.42 FRONT CAMERA IMAGE (FOV) CONE AT SURFACE
VIEW E-E SCALE 3:1
Ø 5.32 REAR CAMERA IMAGE CONE AREA AT SURFACE
Ø 4.29 FLASH CONE AREA AT SURFACE
VIEW D-D SCALE 3:1
ALS
PROXIMITY
EARPIECE
FRONT CAMERA
FRONT MIC
RECEIVER
RINGER SWITCH
+VOLUME BUTTON
-VOLUME BUTTON
HOME BUTTON
SIM TRAY
REAR MIC
REAR FLASH
REAR CAMERA
DO NOT OBSTRUCT THIS AREA WITH METAL
SEE DETAIL A
AUDIO JACK
SCREW
BOTTOM MIC
SPEAKER
SEE DETAIL B
DETAIL B SCALE 2:1
RECOMMENDED MATING CONNECTOR KEEPOUT AREA FLUSH TO BODY OUTWARD 14.0
RECOMMENDED MATING CONNECTOR KEEPOUT AREA FLUSH TO BODY OUTWARD 14.0 (CONNECTOR SHOWN)
METRIC
Apple Inc.
APPLE INC.
09/10/12
DIMENSIONS ARE IN MILLIMETERS
TOLERANCES
x.x ±0.4
x.xx ±0.20
x.xxx ±0.100
ANGLES ±0.5°
THIRD ANGLE PROJECTION
SIZE D
SCALE NONE
IPHONE 5

56.60 12.9 英寸 iPad Pro（第 6 代）1/5

[英语]

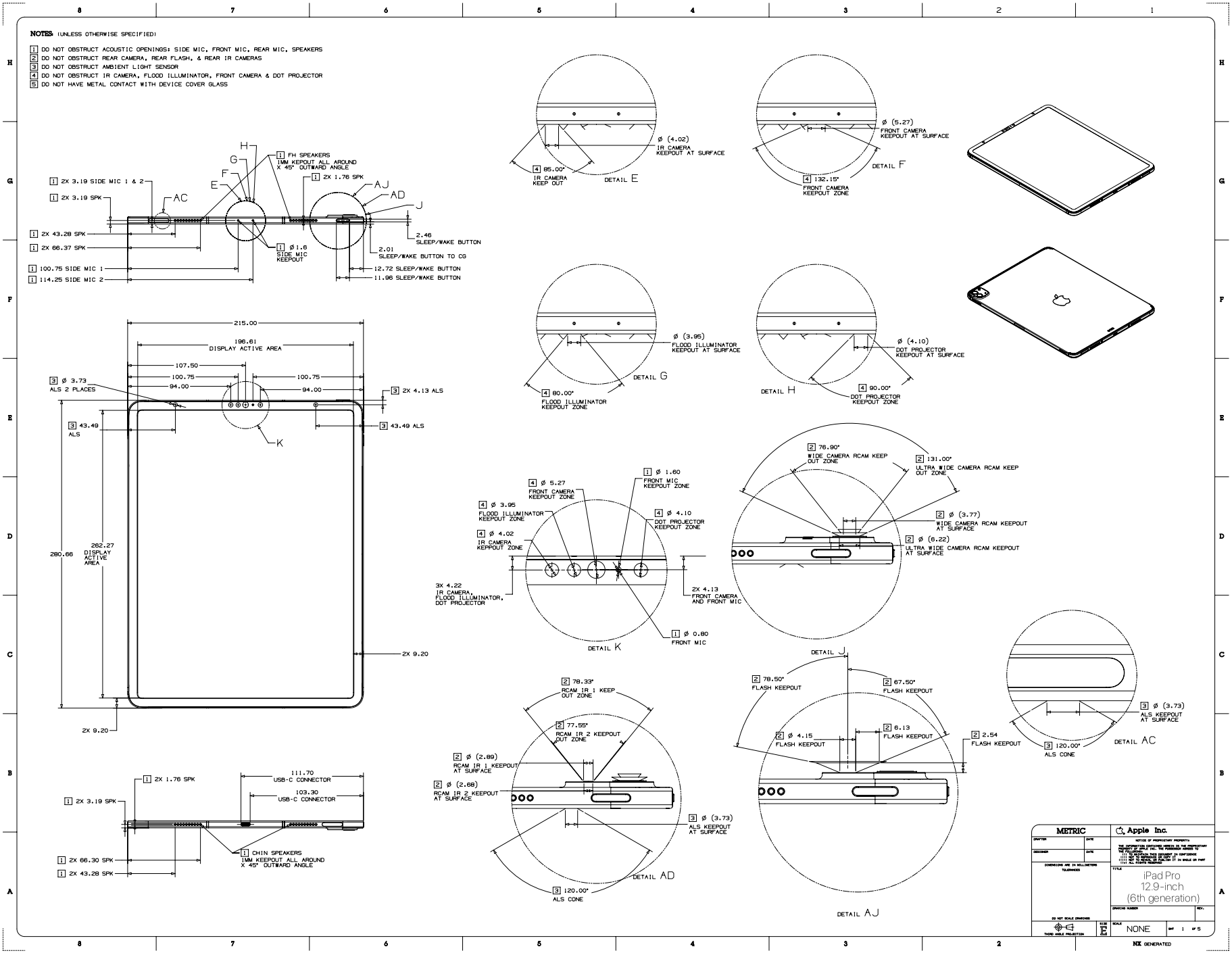

56.61 12.9 英寸 iPad Pro（第 6 代）2/5

[英语]

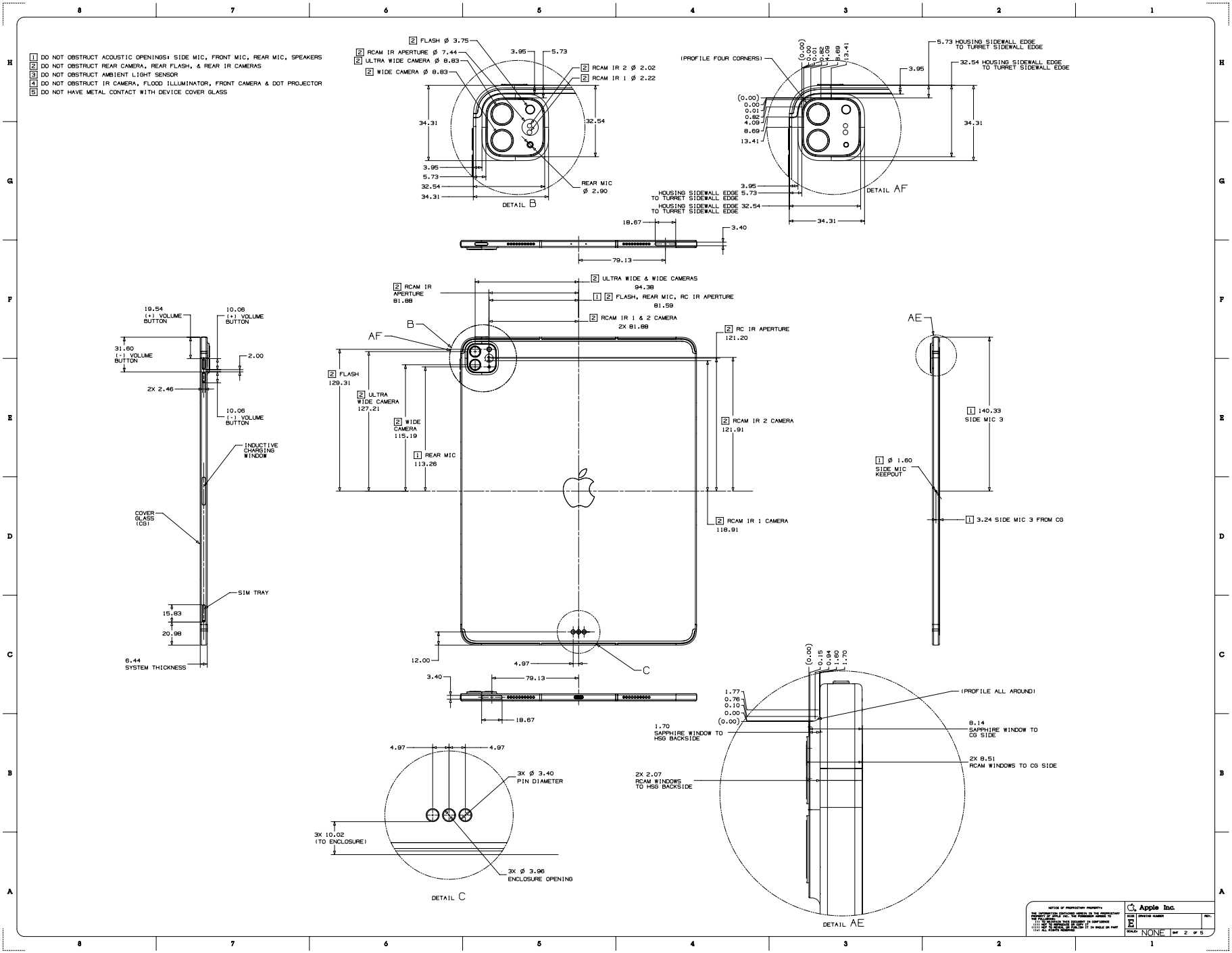

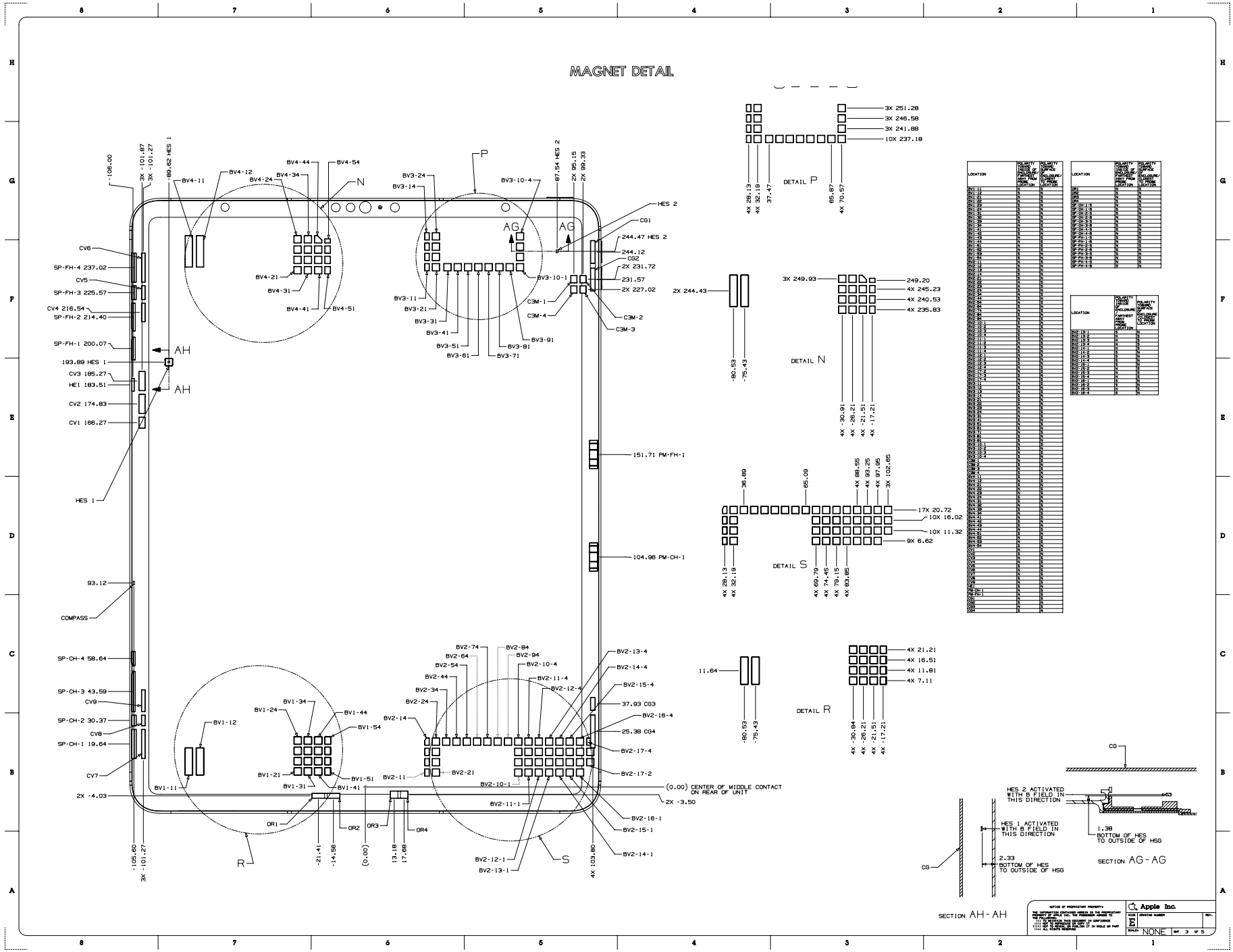
MAGNET DETAIL
DETAIL P
DETAIL N
DETAIL S
DETAIL R
SECTION AG - AG
SECTION AH - AH
(0.00) CENTER OF MIDDLE CONTACT ON REAR OF UNIT
HES 2 ACTIVATED WITH B FIELD IN THIS DIRECTION
HES 1 ACTIVATED WITH B FIELD IN THIS DIRECTION
Apple Inc.

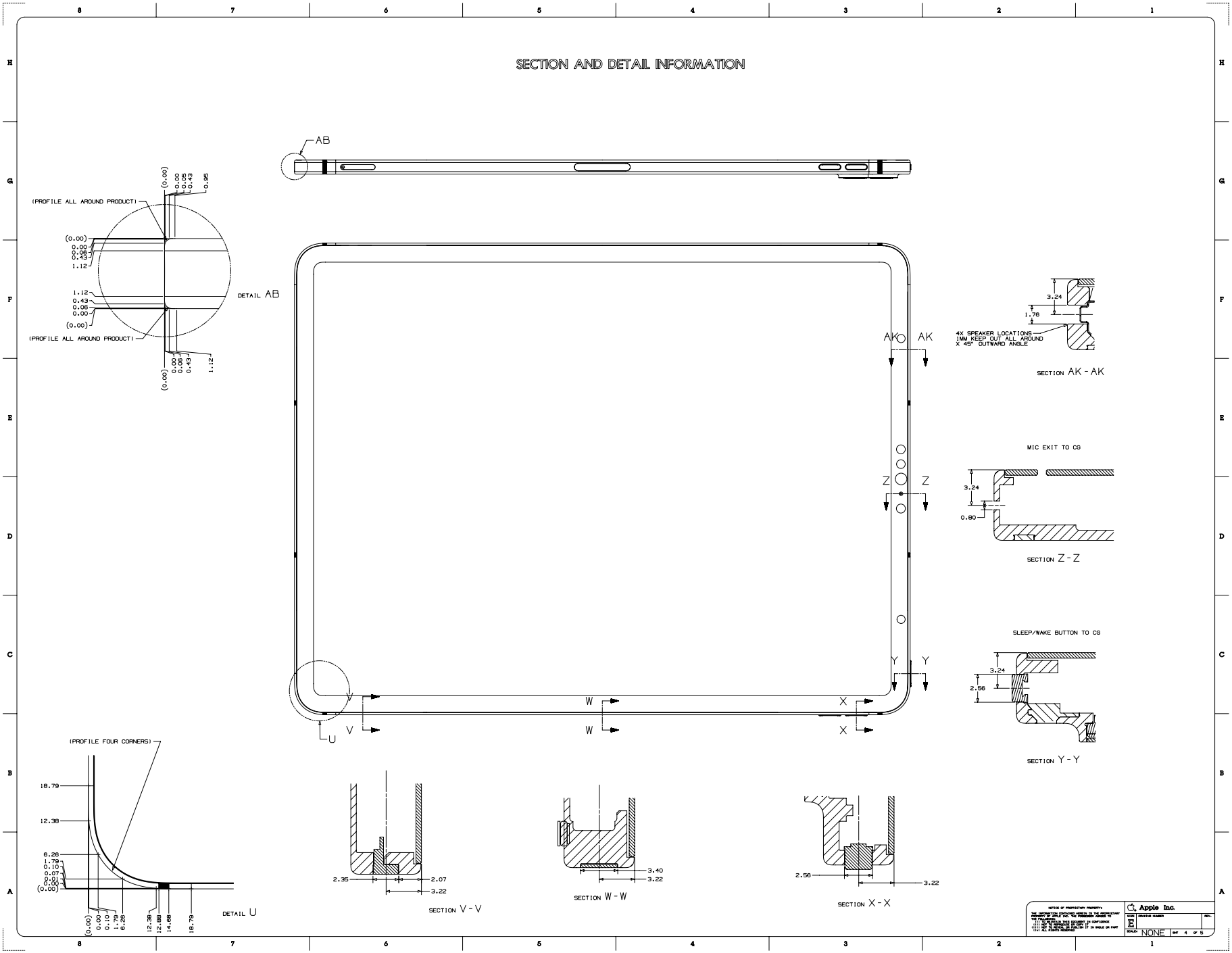
SECTION AND DETAIL INFORMATION
AB
DETAIL AB
(PROFILE ALL AROUND PRODUCT)
AK
AK
4X SPEAKER LOCATIONS
1MM KEEP OUT ALL AROUND
X 45° OUTWARD ANGLE
SECTION AK - AK
MIC EXIT TO CG
SECTION Z - Z
SLEEP/WAKE BUTTON TO CG
SECTION Y - Y
(PROFILE FOUR CORNERS)
DETAIL U
SECTION V - V
SECTION W - W
SECTION X - X
Apple Inc.
NONE

56.64 12.9 英寸 iPad Pro（第 6 代）5/5

[英语]

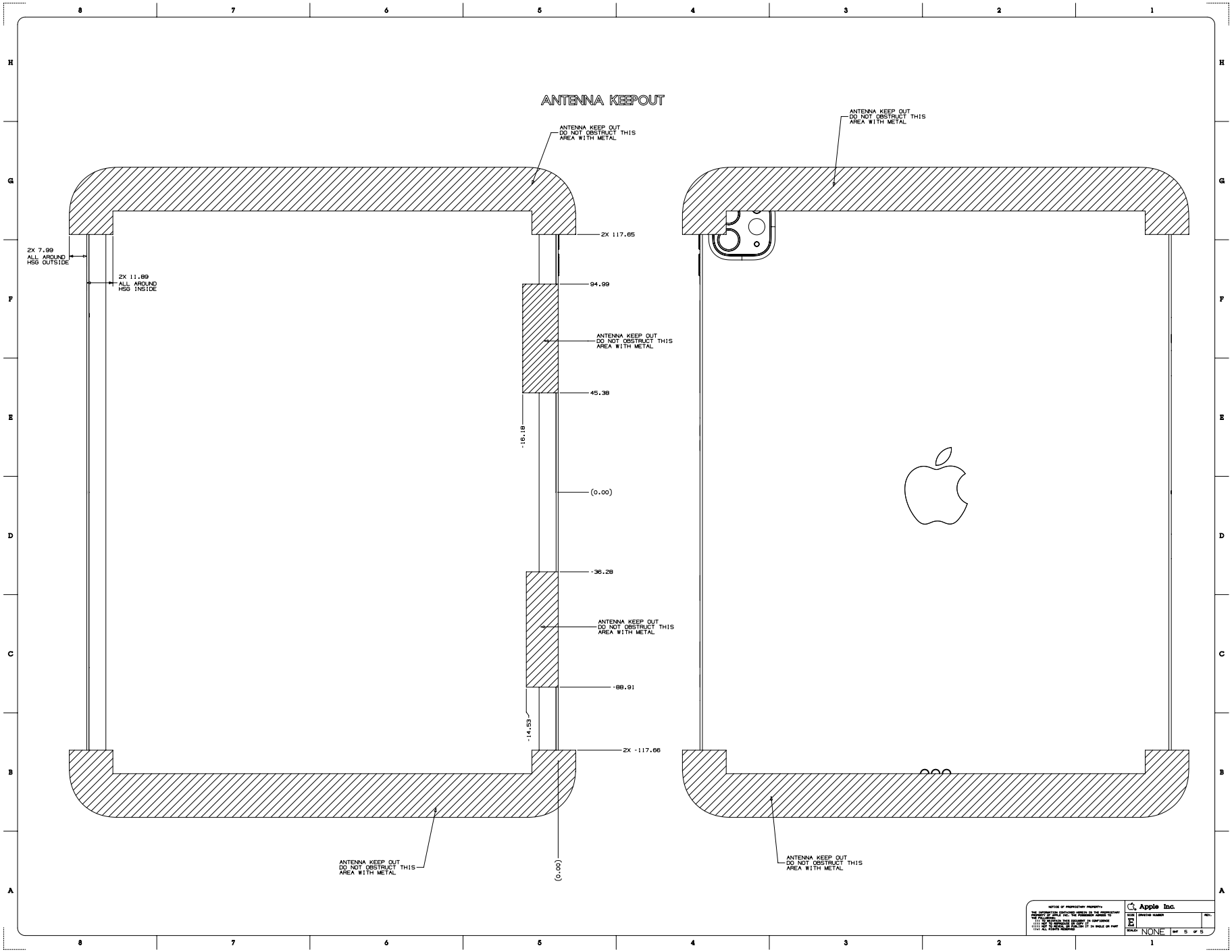

56.65 11 英寸 iPad Pro（第 4 代）1/5

[英语]

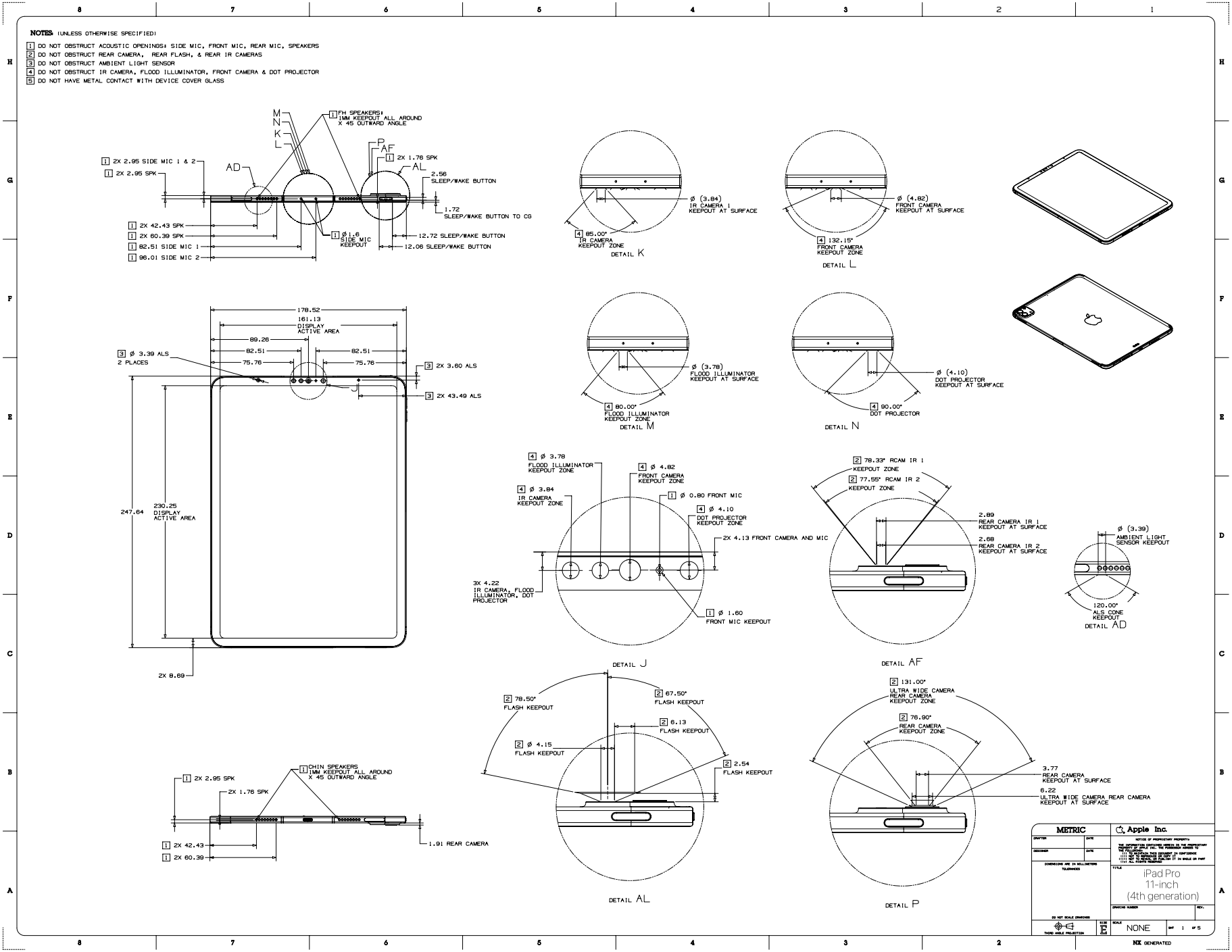

56.66 11 英寸 iPad Pro（第 4 代）2/5

[英语]

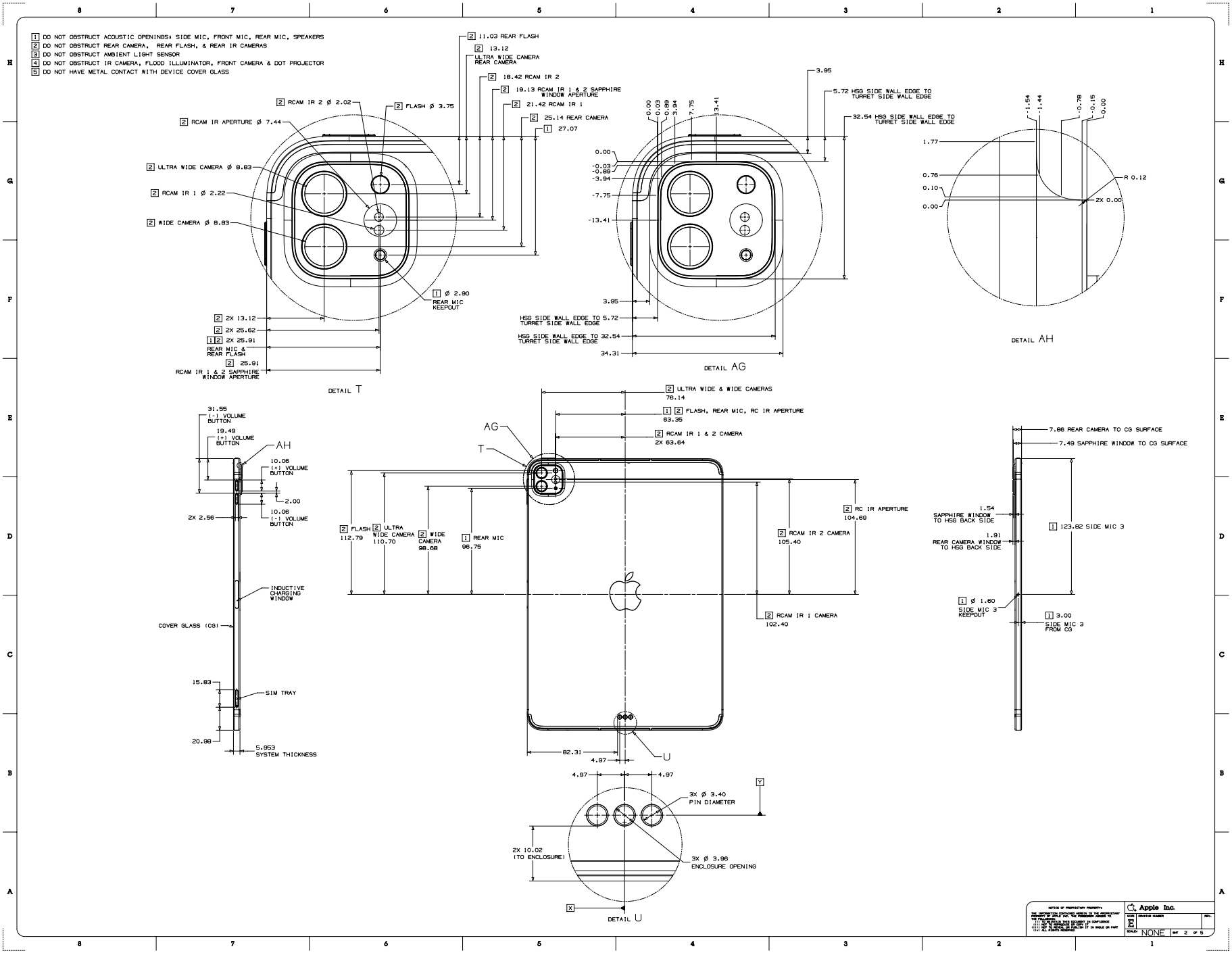

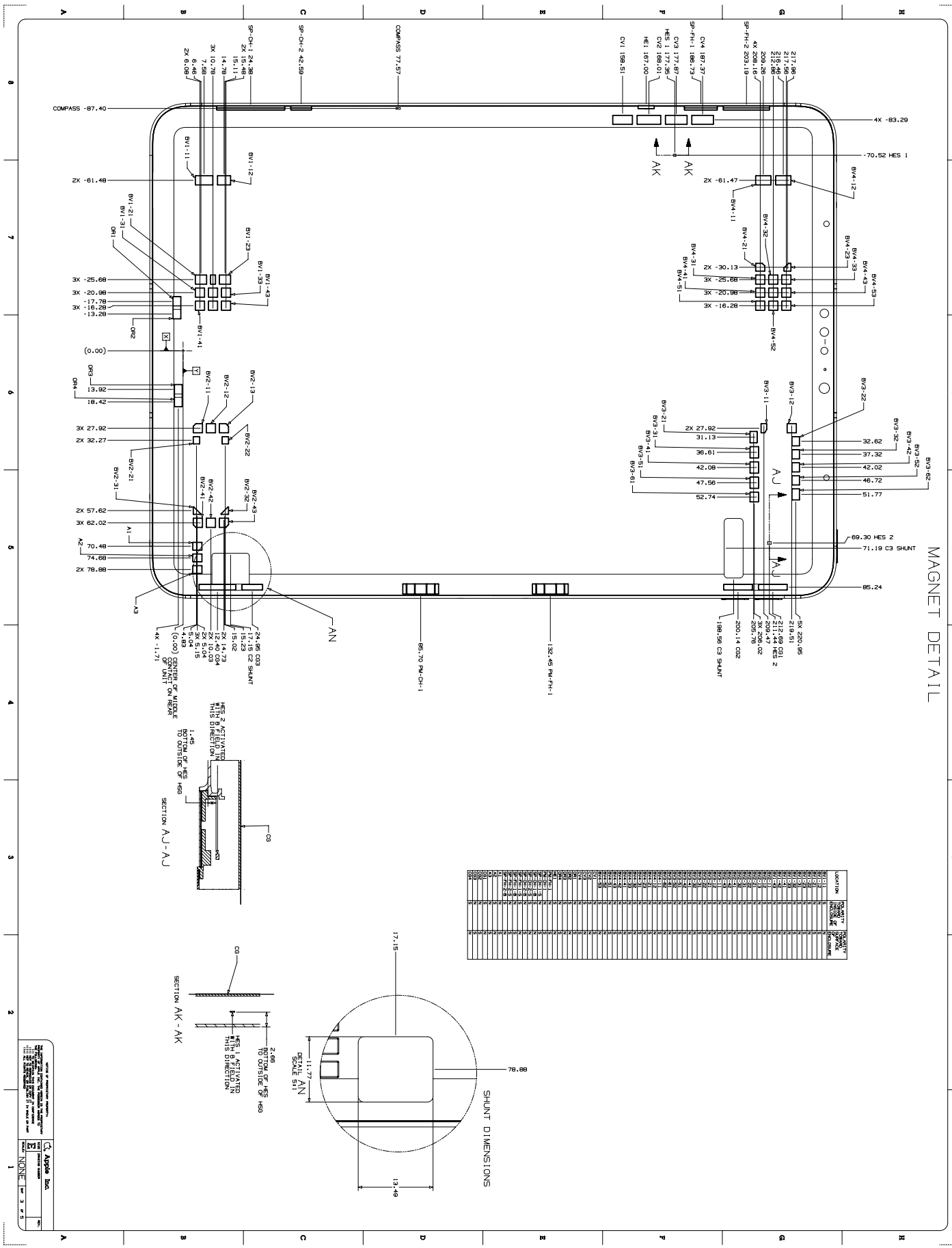
MAGNET DETAIL
SHUNT DIMENSIONS
SECTION AJ - AJ
SECTION AK - AK
DETAIL AN
SCALE 5:1
Apple Inc.
NONE

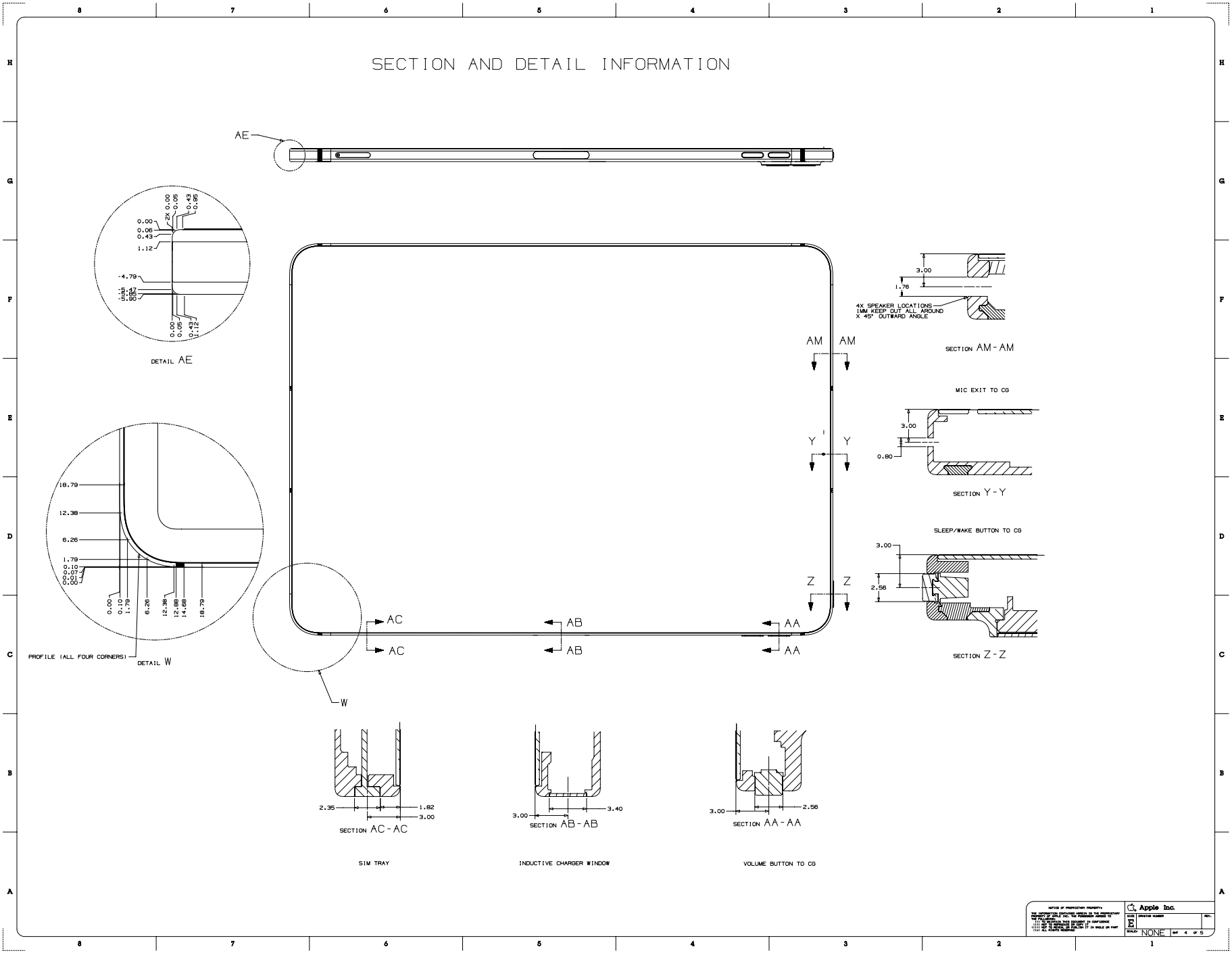
SECTION AND DETAIL INFORMATION
AE
DETAIL AE
PROFILE (ALL FOUR CORNERS)
DETAIL W
W
AM AM
Y Y
Z Z
AC AC
AB AB
AA AA
SECTION AM-AM
4X SPEAKER LOCATIONS
1MM KEEP OUT ALL AROUND
X 45° OUTWARD ANGLE
MIC EXIT TO CG
SECTION Y-Y
SLEEP/WAKE BUTTON TO CG
SECTION Z-Z
SECTION AC-AC
SIM TRAY
SECTION AB-AB
INDUCTIVE CHARGER WINDOW
SECTION AA-AA
VOLUME BUTTON TO CG
Apple Inc.
NONE

56.69 11 英寸 iPad Pro（第 4 代）5/5

[英语]

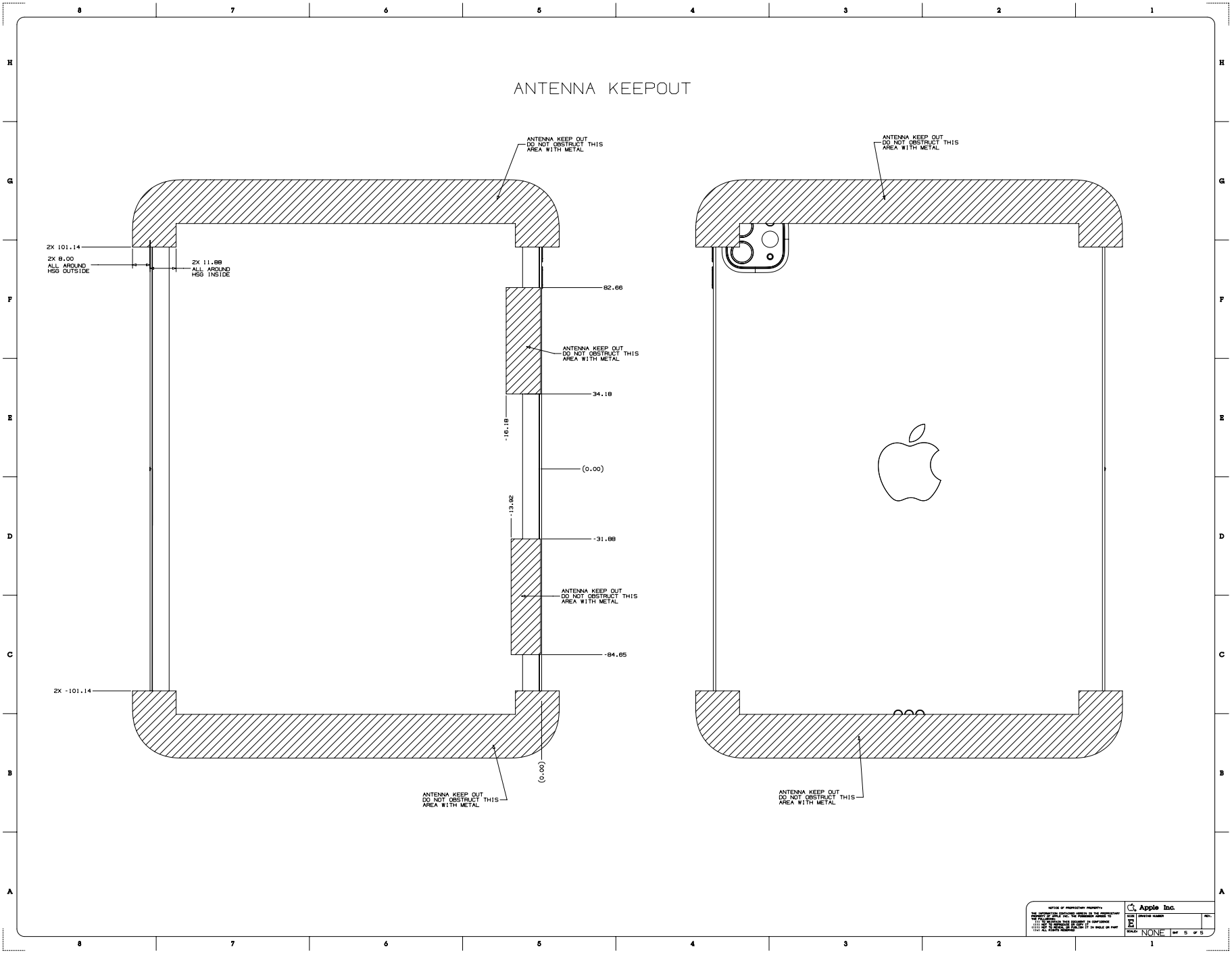

56.70 iPad（第 10 代）1/6

[英语]

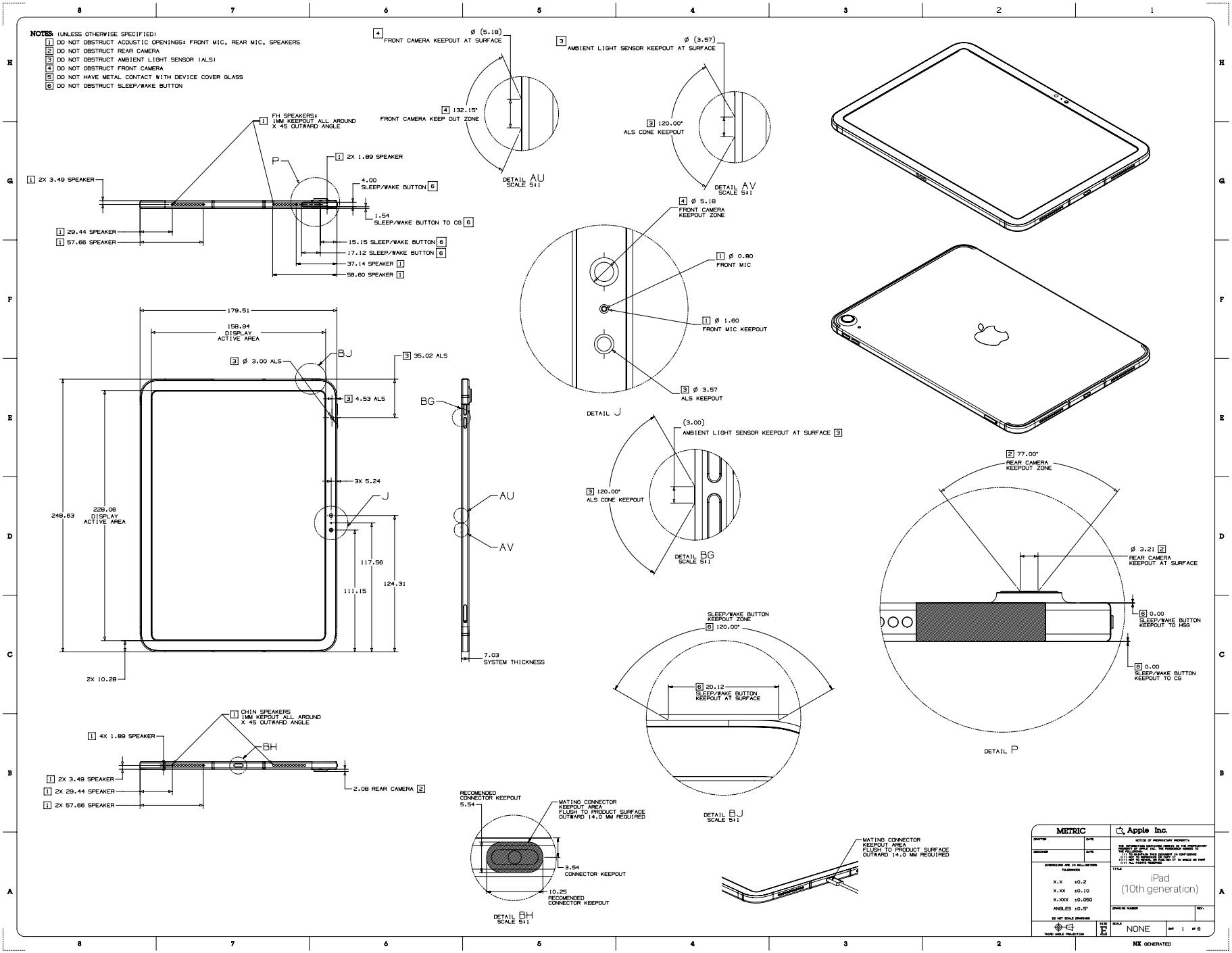

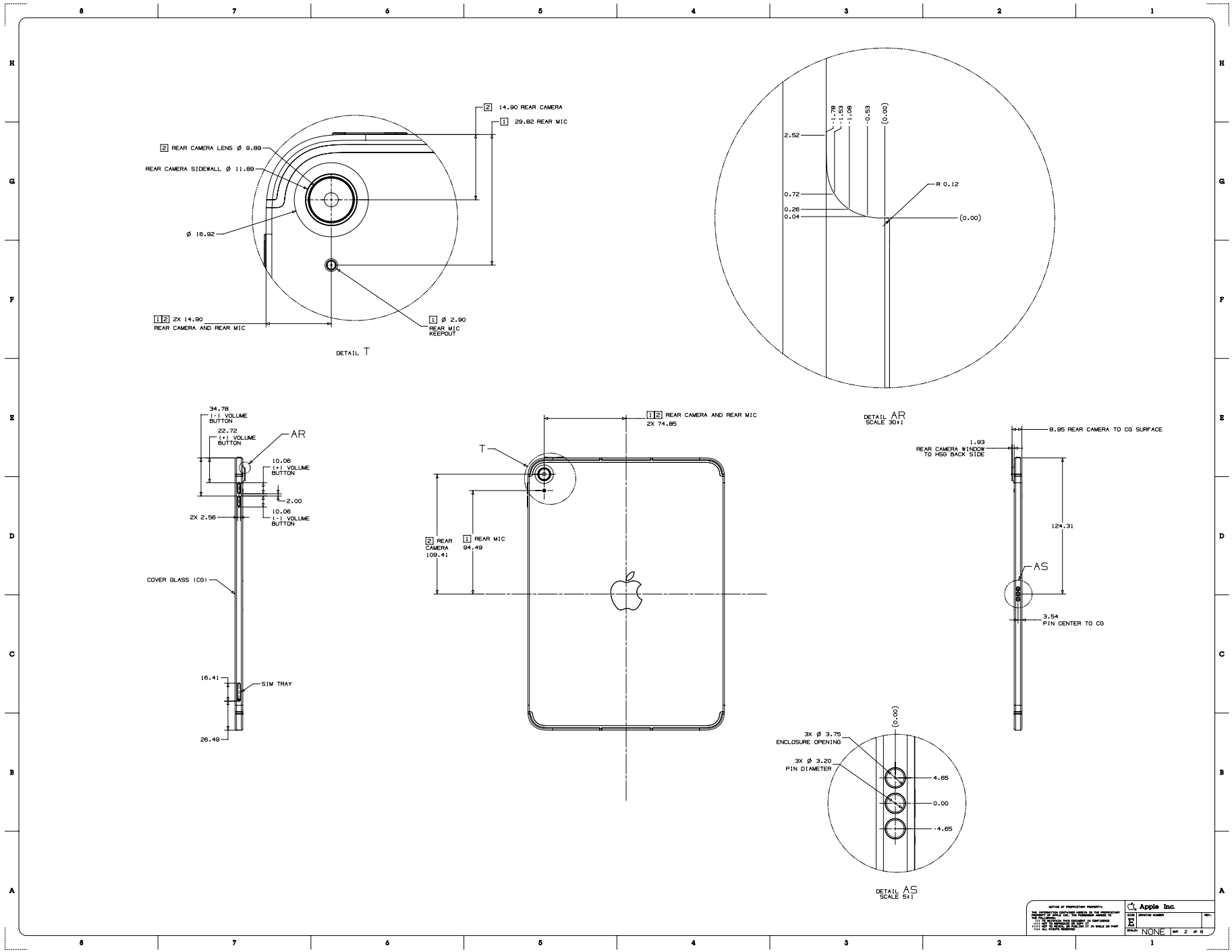
[2] 14.90 REAR CAMERA
[1] 29.82 REAR MIC
[2] REAR CAMERA LENS Ø 9.89
REAR CAMERA SIDEWALL Ø 11.89
Ø 16.92
[1][2] 2X 14.90
REAR CAMERA AND REAR MIC
[1] Ø 2.90
REAR MIC
KEEPOUT
DETAIL T
2.52
1.78
1.53
1.08
0.53
(0.00)
0.72
0.26
0.04
R 0.12
(0.00)
DETAIL AR
SCALE 30:1
34.78
[-] VOLUME
BUTTON
22.72
[+] VOLUME
BUTTON
AR
10.06
[+] VOLUME
BUTTON
2.00
2X 2.56
10.06
[-] VOLUME
BUTTON
COVER GLASS (CG)
16.41
SIM TRAY
26.49
[1][2] REAR CAMERA AND REAR MIC
2X 74.85
T
[2] REAR
CAMERA
109.41
[1] REAR MIC
94.49
8.95 REAR CAMERA TO CG SURFACE
1.93
REAR CAMERA WINDOW
TO HSG BACK SIDE
124.31
AS
3.54
PIN CENTER TO CG
(0.00)
3X Ø 3.75
ENCLOSURE OPENING
3X Ø 3.20
PIN DIAMETER
4.65
0.00
-4.65
DETAIL AS
SCALE 5:1
Apple Inc.
SIZE
E
SCALE
NONE
SHT 2 OF 6

HALL EFFECT SENSORS AND COMPASS

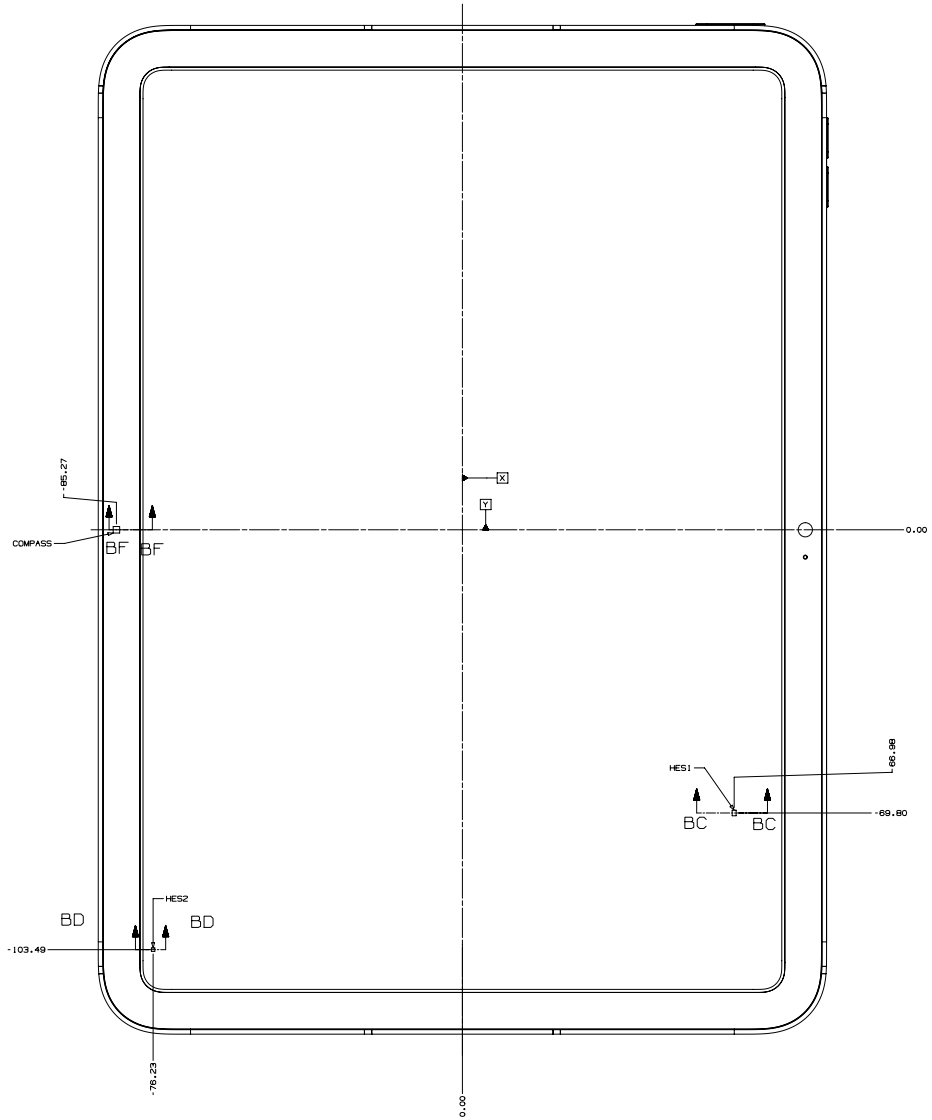

HALL EFFECT SENSOR TABLE

SENSOR	TRIGGERING FIELD (mT)	RELEASE FIELD (mT)
HES1	2.3-3.7	1.5-2.9
HES2	7.4-11.6	6.5-10.7

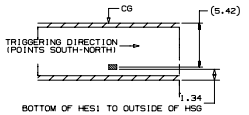

SECTION BC-BC

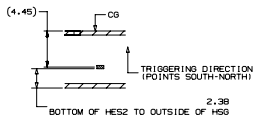

SECTION BD-BD

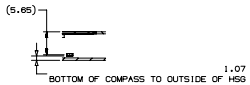

SECTION BF-BF

NOTICE OF PROPRIETARY PROPERTY
THE INFORMATION CONTAINED HEREIN IS THE PROPRIETARY PROPERTY OF APPLE INC. THE POSSESSOR AGREES TO:
(1) NOT REPRODUCE THIS DOCUMENT IN WHOLE OR IN PART;
(2) NOT TO DISCLOSE OR DISTRIBUTE IT IN WHOLE OR PART TO ANY THIRD PARTY;
(3) ALL RIGHTS RESERVED

Apple Inc.
SIZE E
SCALE NONE
SHT 3 OF 6

MAGNET DETAIL

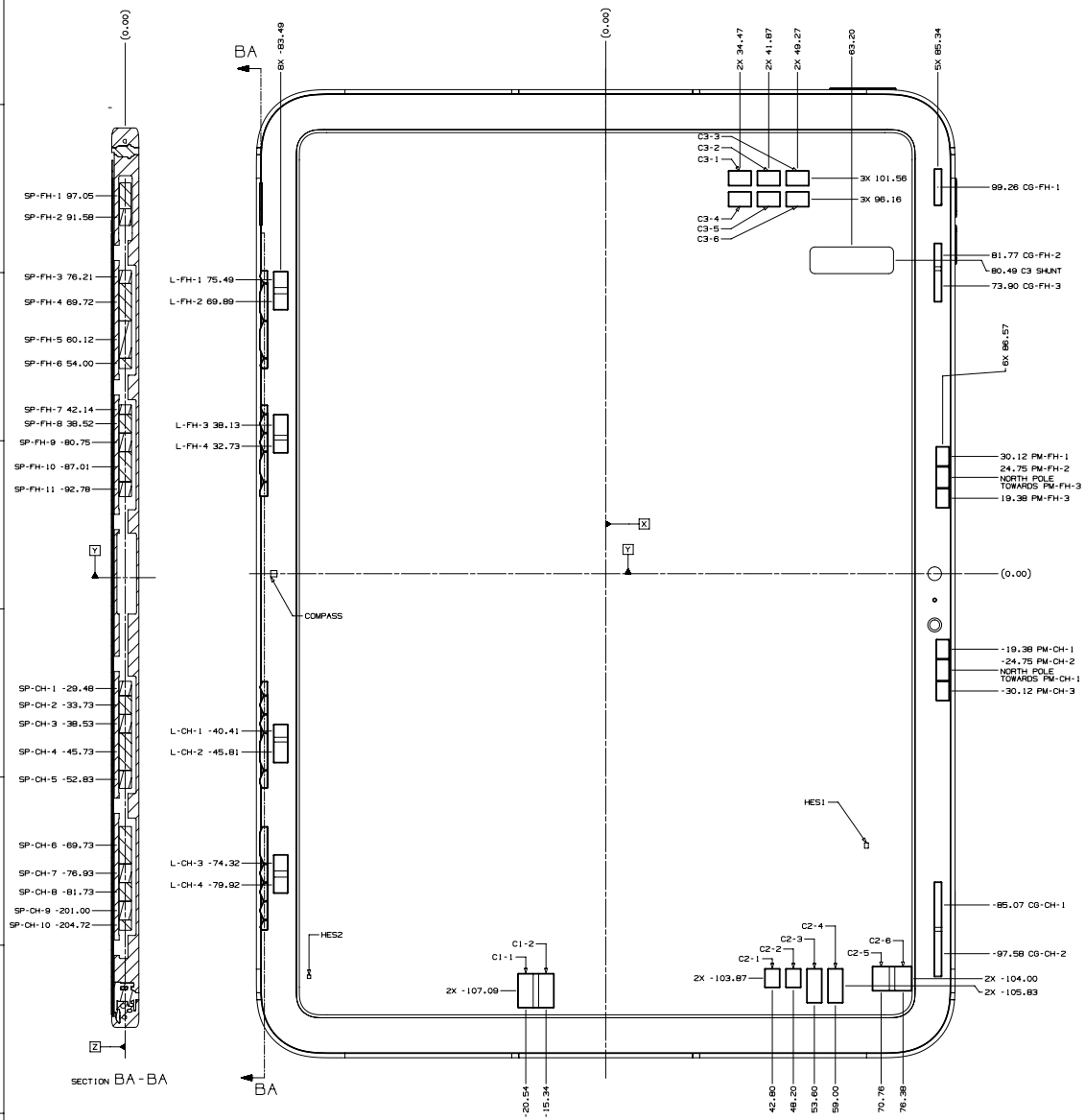

COORDINATES ARE FOR MAGNET CENTER POSITION

MAGNET TABLE

LOCATION	POLARITY TOWARDS INSIDE OF ENCLOSURE	POLARITY TOWARDS OUTSIDE OF ENCLOSURE	MAGNET GRADE	MAGNET CENTER Z DIST. TO CG TOP (MM)	THICKNESS (Z,MM)	WIDTH (Y,MM)	LENGTH (X,MM)
PM-FH-1	N	S	N50M	3.540	3.183	3.500	5.110
PM-FH-2	SEE DWG DETAIL	SEE DWG DETAIL	N50M	3.540	3.183	3.500	5.591
PM-FH-3	S	N	N50M	3.540	3.183	3.500	5.110
PM-CH-1	S	N	N50M	3.540	3.183	3.500	5.110
PM-CH-2	SEE DWG DETAIL	SEE DWG DETAIL	N50M	3.540	3.183	3.500	5.591
PM-CH-3	N	S	N50M	3.540	3.183	3.500	5.110
CG-FH-1	S	N	N45SH	1.137	0.850	2.050	9.530
CG-FH-2	S	N	N45SH	1.137	0.850	2.050	8.069
CG-FH-3	N	S	N45SH	1.137	0.850	2.050	8.081
CG-CH-1	N	S	N45SH	1.137	0.850	2.050	11.076
CG-CH-2	S	N	N45SH	1.137	0.850	2.050	11.076
SP-FH-1	N	S	N45SH	3.540	2.962	0.718	6.880
SP-FH-2	S	N	N45SH	3.540	2.962	0.718	4.300
SP-FH-3	N	S	N45SH	3.540	3.183	2.125	3.378
SP-FH-4	S	N	N45SH	3.540	3.183	2.125	9.600
SP-FH-5	N	S	N45SH	3.540	3.183	2.125	9.600
SP-FH-6	S	N	N45SH	3.540	3.183	2.125	2.640
SP-FH-7	N	S	N45SH	3.540	3.183	2.125	2.440
SP-FH-8	S	N	N45SH	3.540	3.183	2.125	4.800
SP-FH-9	N	S	N45SH	3.540	3.183	2.125	4.800
SP-FH-10	S	N	N45SH	3.540	3.183	2.125	7.730
SP-FH-11	N	S	N45SH	3.540	3.183	2.125	3.800
SP-CH-1	S	N	N45SH	3.540	3.183	2.125	3.691
SP-CH-2	N	S	N45SH	3.540	3.183	2.125	4.800
SP-CH-3	S	N	N45SH	3.540	3.183	2.125	4.800
SP-CH-4	N	S	N45SH	3.540	3.183	2.125	9.600
SP-CH-5	S	N	N45SH	3.540	3.183	2.125	4.800
SP-CH-6	S	N	N45SH	3.540	3.183	2.125	9.600
SP-CH-7	N	S	N45SH	3.540	3.183	2.125	4.800
SP-CH-8	S	N	N45SH	3.540	3.183	2.125	4.800
SP-CH-9	N	S	N45SH	3.540	3.183	2.125	4.800
SP-CH-10	S	N	N45SH	3.540	3.183	2.125	2.640
L-FH-1	N	S	N45SH	5.979	0.800	3.800	4.200
L-FH-2	S	N	N45SH	5.979	0.800	3.800	4.200
L-FH-3	N	S	N45SH	5.979	0.800	3.800	5.400
L-FH-4	S	N	N45SH	5.979	0.800	3.800	3.400
L-CH-1	S	N	N45SH	5.979	0.800	3.800	3.400
L-CH-2	N	S	N45SH	5.979	0.800	3.800	5.400
L-CH-3	S	N	N45SH	5.979	0.800	3.800	4.200
L-CH-4	N	S	N45SH	5.979	0.800	3.800	4.200
C1-1	N	S	N45SH	5.979	0.800	4.000	8.906
C1-2	S	N	N45SH	5.979	0.800	4.000	8.906
C2-1	S	N	N45SH	5.979	0.800	4.000	4.973
C2-2	N	S	N45SH	5.979	0.800	4.000	4.973
C2-3	S	N	N45SH	5.979	0.800	4.000	8.906
C2-4	N	S	N45SH	5.979	0.800	4.000	8.906
C2-5	S	N	N45SH	5.979	0.800	4.420	6.399
C2-6	N	S	N45SH	5.979	0.800	4.420	6.399
C3-1	N	S	N45SH	5.979	0.800	6.000	4.000
C3-2	S	N	N45SH	5.979	0.800	6.000	4.000
C3-3	N	S	N45SH	5.979	0.800	6.000	4.000
C3-4	N	S	N45SH	5.979	0.800	6.000	4.000
C3-5	N	S	N45SH	5.979	0.800	6.000	4.000
C3-6	S	N	N45SH	5.979	0.800	6.000	4.000

SHUNT TABLE

LOCATION	STEEL GRADE	SHUNT CENTER Z DIST. TO CG TOP SURFACE (MM)	THICKNESS (Z,MM)	WIDTH (Y,MM)	LENGTH (X,MM)
C3 SHUNT	1010	6.444	0.15	6.84	21.47

NOTICE OF PROPRIETARY PROPERTY
THE INFORMATION CONTAINED HEREIN IS THE PROPRIETARY PROPERTY OF APPLE INC. THE POSSESSOR AGREES TO:
(1) NOT REPRODUCE, COPY OR USE THIS DRAWING IN WHOLE OR IN PART,
(2) NOT SCALE THIS DRAWING IN CONFORMANCE WITH THE ABOVE, AND
(3) RETURN THIS DRAWING UPON REQUEST.
(4) NOT DISCLOSE ANY INFORMATION CONTAINED HEREIN WITHOUT THE PRIOR WRITTEN CONSENT OF APPLE INC.
(5) ALL RIGHTS RESERVED.

Apple Inc.
SIZE: E | DRAWING NUMBER | REV:
SCALE: NONE | SHT 4 OF 6

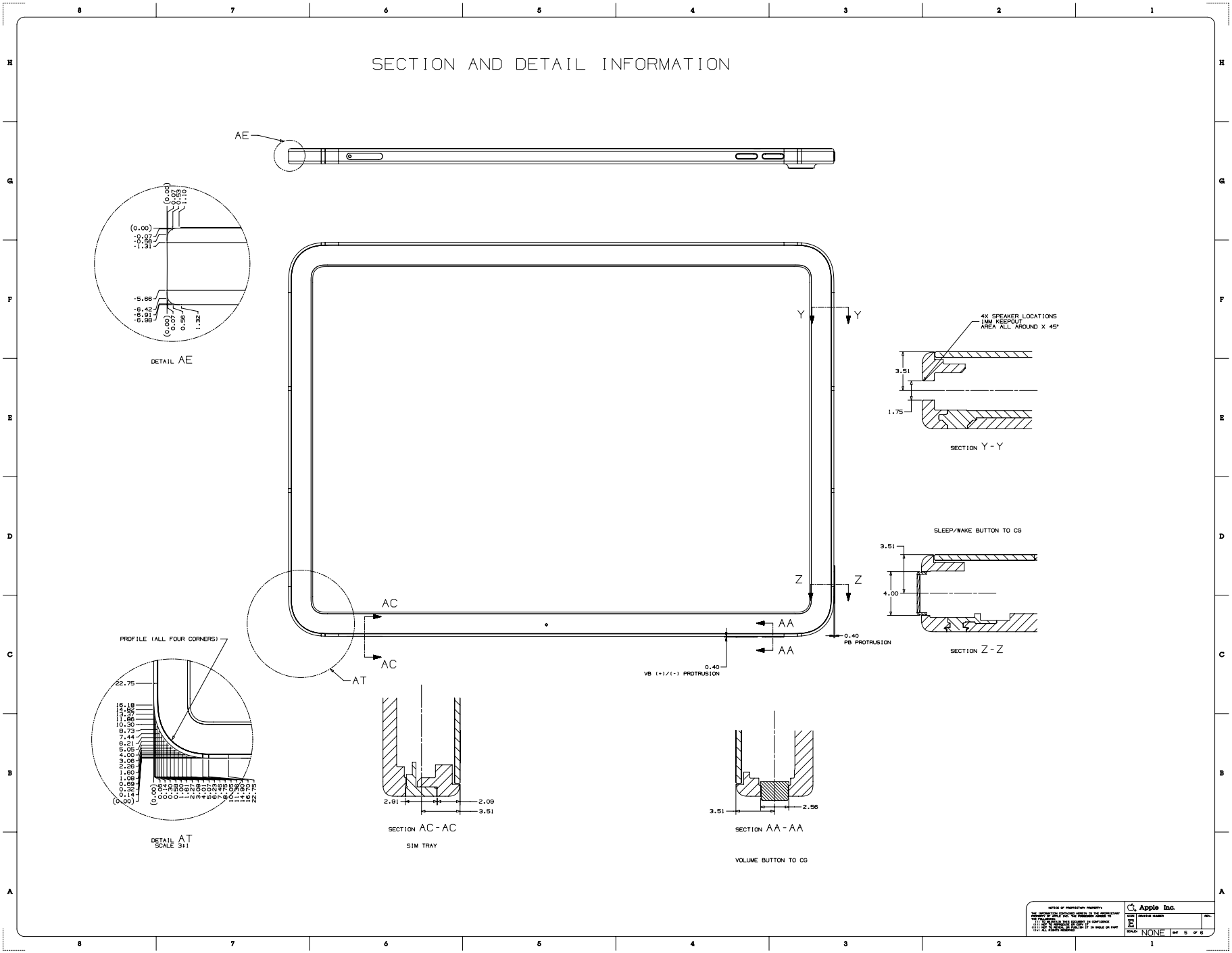
SECTION AND DETAIL INFORMATION
AE
DETAIL AE
Y
Y
4X SPEAKER LOCATIONS
1MM KEEPOUT
AREA ALL AROUND X 45°
SECTION Y-Y
SLEEP/WAKE BUTTON TO CG
SECTION Z-Z
Z
Z
AC
AC
AT
AA
AA
0.40
PB PROTRUSION
0.40
VB (+)/(-) PROTRUSION
PROFILE (ALL FOUR CORNERS)
DETAIL AT
SCALE 3:1
SECTION AC-AC
SIM TRAY
SECTION AA-AA
VOLUME BUTTON TO CG
Apple Inc.
NONE

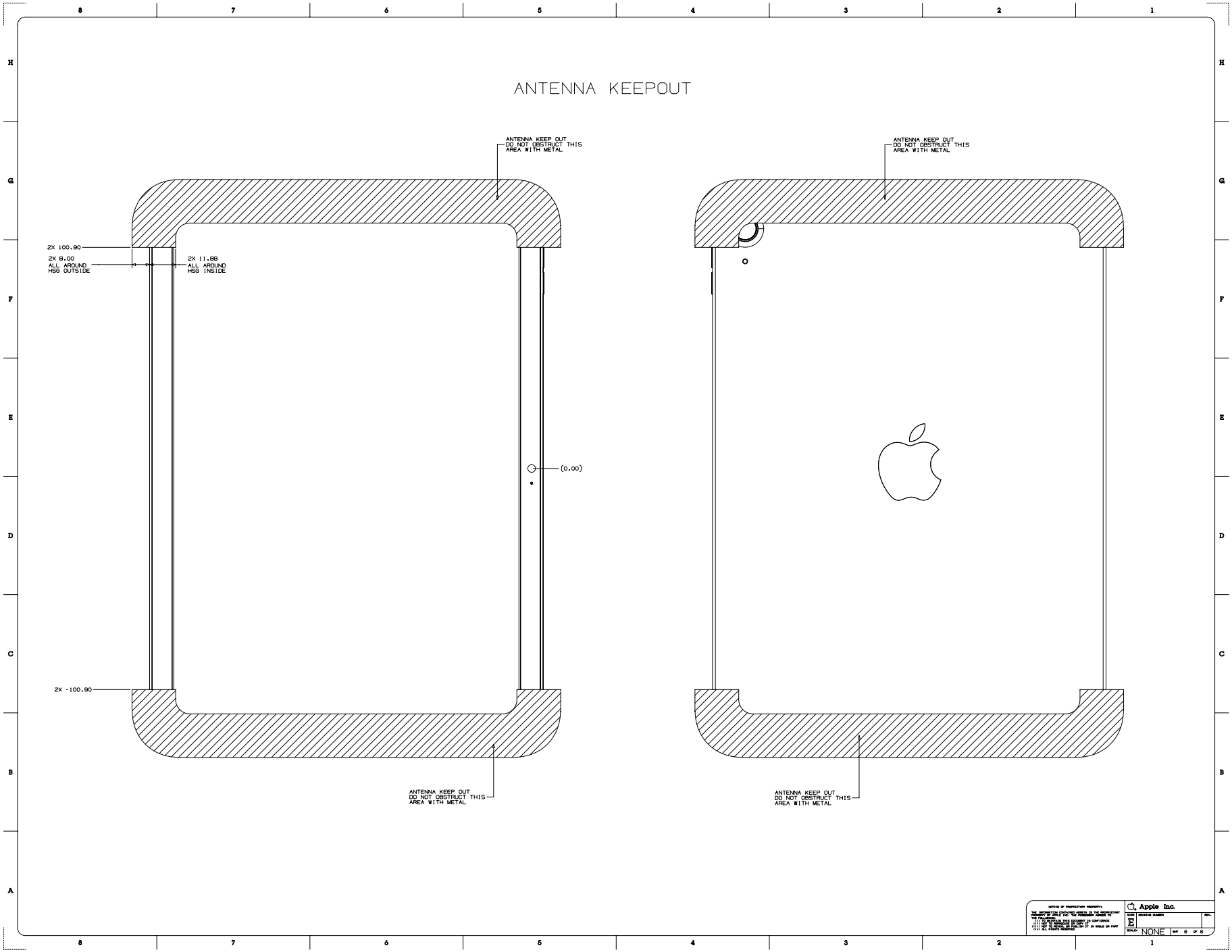
ANTENNA KEEPOUT
ANTENNA KEEP OUT
DO NOT OBSTRUCT THIS
AREA WITH METAL
2X 100.90
2X 8.00
ALL AROUND
HSG OUTSIDE
2X 11.88
ALL AROUND
HSG INSIDE
(0.00)
2X -100.90
ANTENNA KEEP OUT
DO NOT OBSTRUCT THIS
AREA WITH METAL
ANTENNA KEEP OUT
DO NOT OBSTRUCT THIS
AREA WITH METAL
ANTENNA KEEP OUT
DO NOT OBSTRUCT THIS
AREA WITH METAL
Apple Inc.
NONE

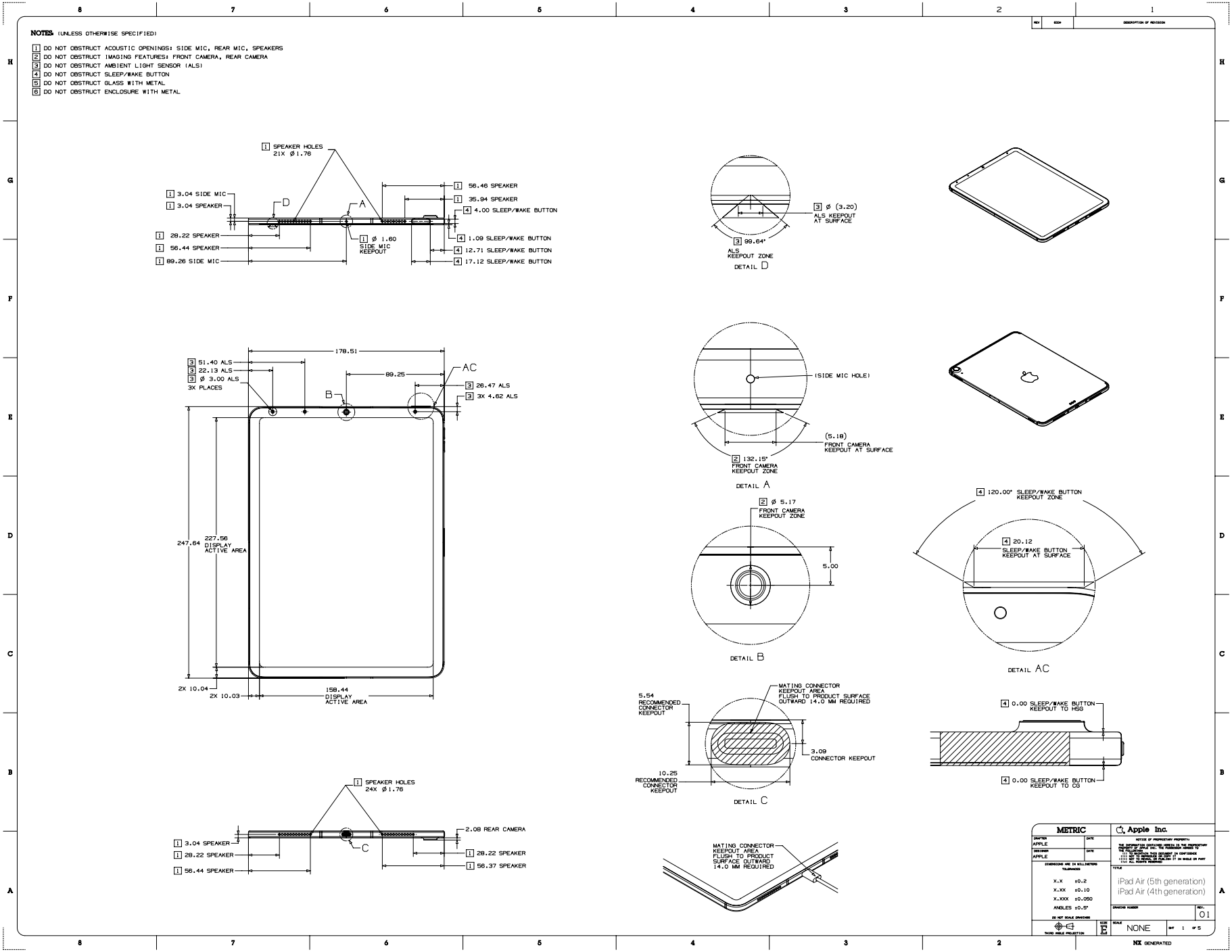
NOTES: (UNLESS OTHERWISE SPECIFIED)
[1] DO NOT OBSTRUCT ACOUSTIC OPENINGS: SIDE MIC, REAR MIC, SPEAKERS
[2] DO NOT OBSTRUCT IMAGING FEATURES: FRONT CAMERA, REAR CAMERA
[3] DO NOT OBSTRUCT AMBIENT LIGHT SENSOR (ALS)
[4] DO NOT OBSTRUCT SLEEP/WAKE BUTTON
[5] DO NOT OBSTRUCT GLASS WITH METAL
[6] DO NOT OBSTRUCT ENCLOSURE WITH METAL
[1] SPEAKER HOLES 21X Ø1.76
[1] 3.04 SIDE MIC
[1] 3.04 SPEAKER
[1] 28.22 SPEAKER
[1] 58.44 SPEAKER
[1] 89.26 SIDE MIC
[1] Ø 1.60 SIDE MIC KEEPOUT
[1] 56.46 SPEAKER
[1] 35.94 SPEAKER
[4] 4.00 SLEEP/WAKE BUTTON
[4] 1.09 SLEEP/WAKE BUTTON
[4] 12.71 SLEEP/WAKE BUTTON
[4] 17.12 SLEEP/WAKE BUTTON
[3] Ø (3.20) ALS KEEPOUT AT SURFACE
[3] 99.64° ALS KEEPOUT ZONE
DETAIL D
[3] 51.40 ALS
[3] 22.13 ALS
[3] Ø 3.00 ALS 3X PLACES
178.51
89.25
[3] 26.47 ALS
[3] 3X 4.62 ALS
247.64
227.56 DISPLAY ACTIVE AREA
2X 10.04
2X 10.03
158.44 DISPLAY ACTIVE AREA
(SIDE MIC HOLE)
(5.18) FRONT CAMERA KEEPOUT AT SURFACE
[2] 132.15° FRONT CAMERA KEEPOUT ZONE
DETAIL A
[2] Ø 5.17 FRONT CAMERA KEEPOUT ZONE
5.00
DETAIL B
[4] 120.00° SLEEP/WAKE BUTTON KEEPOUT ZONE
[4] 20.12 SLEEP/WAKE BUTTON KEEPOUT AT SURFACE
DETAIL AC
[1] SPEAKER HOLES 24X Ø1.76
[1] 3.04 SPEAKER
[1] 28.22 SPEAKER
[1] 56.44 SPEAKER
2.08 REAR CAMERA
[1] 28.22 SPEAKER
[1] 56.37 SPEAKER
5.54 RECOMMENDED CONNECTOR KEEPOUT
MATING CONNECTOR KEEPOUT AREA FLUSH TO PRODUCT SURFACE OUTWARD 14.0 MM REQUIRED
3.09 CONNECTOR KEEPOUT
10.25 RECOMMENDED CONNECTOR KEEPOUT
DETAIL C
[4] 0.00 SLEEP/WAKE BUTTON KEEPOUT TO HSG
[4] 0.00 SLEEP/WAKE BUTTON KEEPOUT TO CG
MATING CONNECTOR KEEPOUT AREA FLUSH TO PRODUCT SURFACE OUTWARD 14.0 MM REQUIRED
METRIC
Apple Inc.
X.X ±0.2
X.XX ±0.10
X.XXX ±0.050
ANGLES ±0.5°
iPad Air (5th generation)
iPad Air (4th generation)
NONE
NX GENERATED

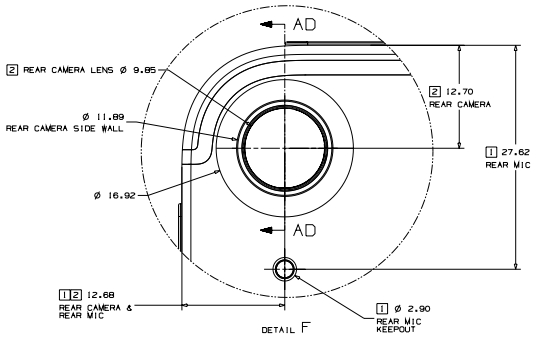

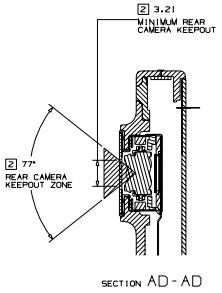

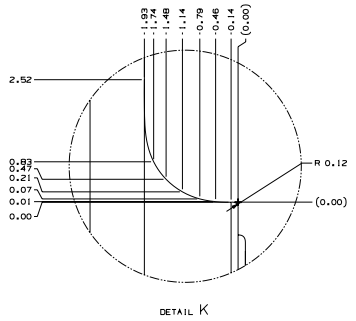

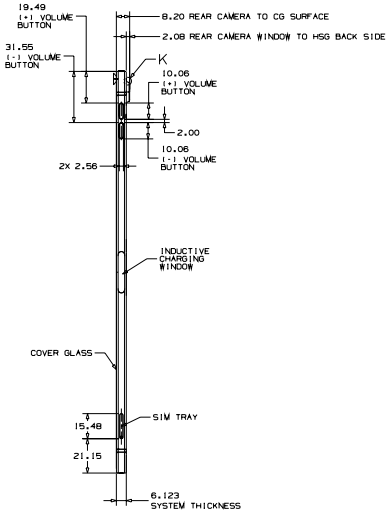

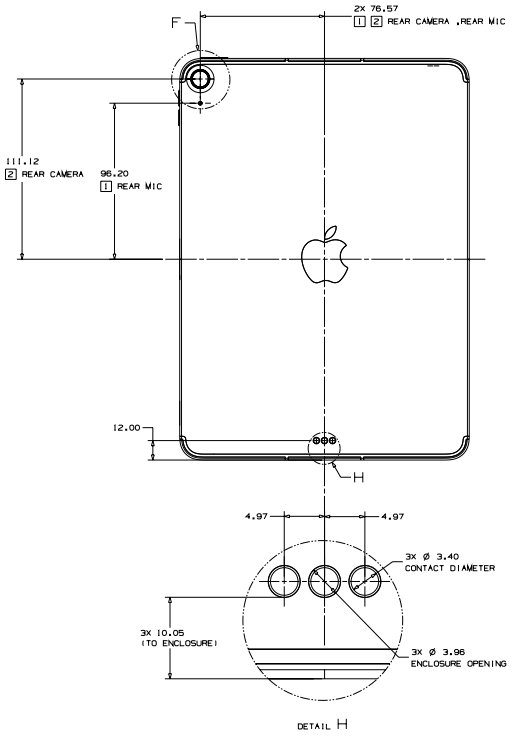

NOTICE OF PROPRIETARY PROPERTY
THE INFORMATION CONTAINED HEREIN IS THE PROPRIETARY PROPERTY OF APPLE INC. THE POSSESSOR AGREES TO THE FOLLOWING:
(1) TO MAINTAIN THIS DOCUMENT IN CONFIDENCE
(2) NOT TO REPRODUCE OR COPY IT IN WHOLE OR PART
(3) NOT TO REVEAL OR PUBLISH IT IN WHOLE OR PART
IN ALL RIGHTS RESERVED

Apple Inc.
SIZE E | DRAWING NUMBER | REV.
SCALE NONE | SHT 2 OF 5

56.78 iPad Air（第 5 代）和 iPad Air（第 4 代）3/5

[英语]

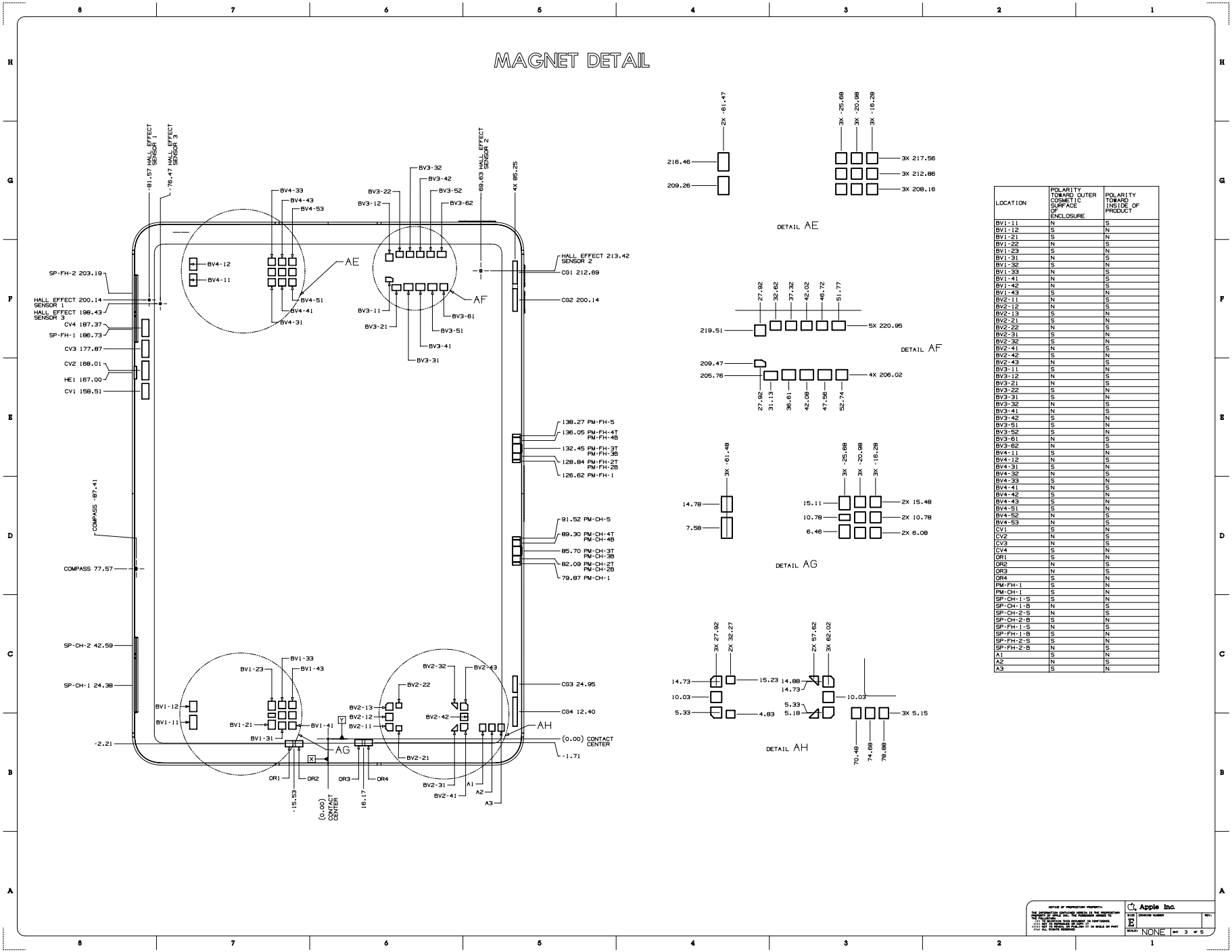

LOCATION	POLARITY TOWARD OUTER COSMETIC SURFACE OF ENCLOSURE	POLARITY TOWARD INSIDE OF PRODUCT
BV1-11	N	S
BV1-12	S	N
BV1-21	S	N
BV1-22	N	S
BV1-23	S	N
BV1-31	N	S
BV1-32	S	N
BV1-33	N	S
BV1-41	N	S
BV1-42	N	S
BV1-43	S	N
BV2-11	N	S
BV2-12	N	S
BV2-13	S	N
BV2-21	S	N
BV2-22	N	S
BV2-31	S	N
BV2-32	S	N
BV2-41	N	S
BV2-42	S	N
BV2-43	N	S
BV3-11	S	N
BV3-12	N	S
BV3-21	N	S
BV3-22	S	N
BV3-31	S	N
BV3-32	N	S
BV3-41	N	S
BV3-42	S	N
BV3-51	S	N
BV3-52	S	N
BV3-61	N	S
BV3-62	N	S
BV4-11	S	N
BV4-12	N	S
BV4-31	S	N
BV4-32	N	S
BV4-33	S	N
BV4-41	N	S
BV4-42	S	N
BV4-43	S	N
BV4-51	S	N
BV4-52	N	S
BV4-53	N	S
CV1	S	N
CV2	N	S
CV3	N	S
CV4	S	N
OR1	S	N
OR2	N	S
OR3	N	S
OR4	S	N
PM-FH-1	S	N
PM-CH-1	S	N
SP-CH-1-S	S	N
SP-CH-1-B	N	S
SP-CH-2-S	N	S
SP-CH-2-B	S	N
SP-FH-1-S	N	S
SP-FH-1-B	S	N
SP-FH-2-S	S	N
SP-FH-2-B	N	S
A1	S	N
A2	N	S
A3	S	N

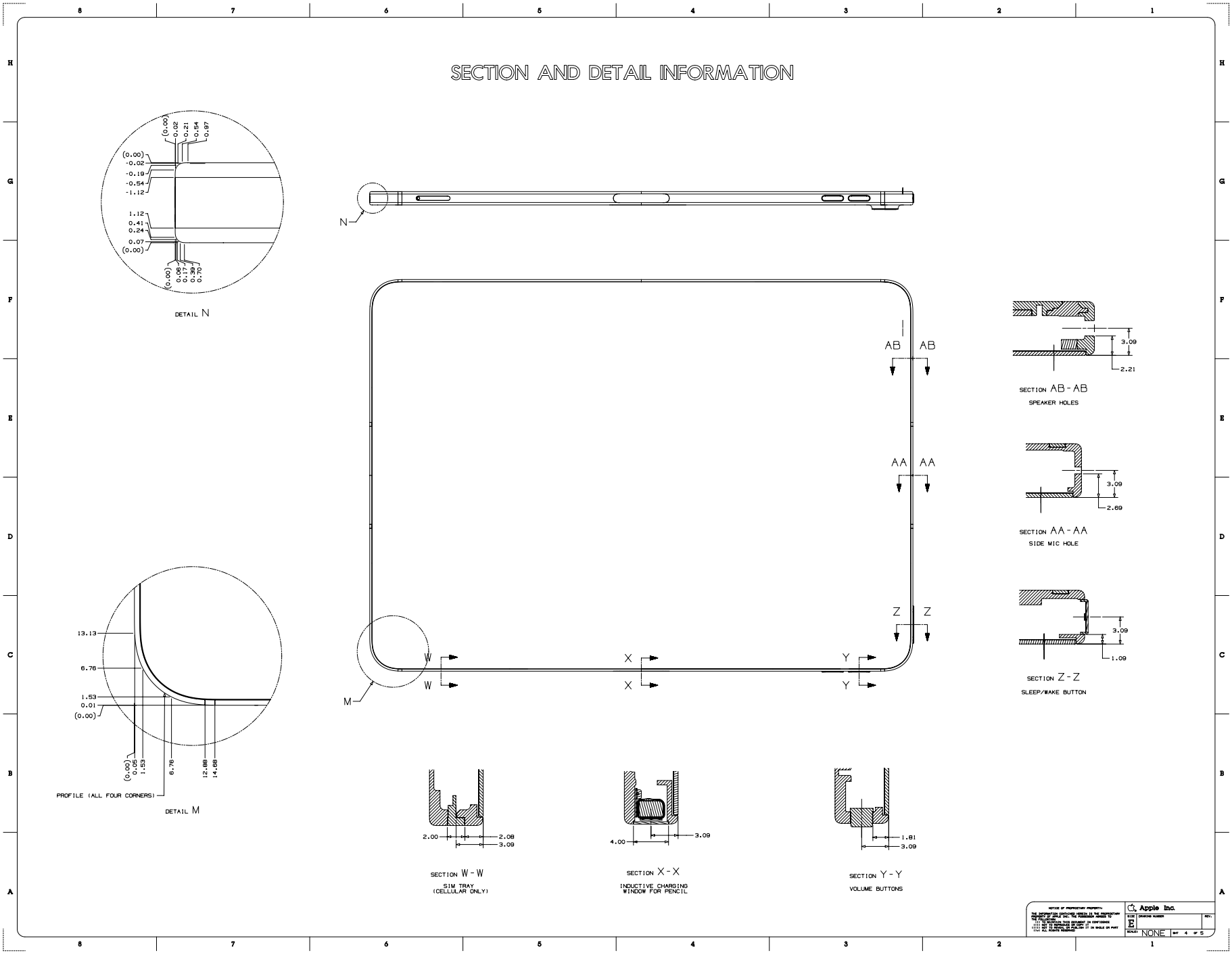
SECTION AND DETAIL INFORMATION
DETAIL N
DETAIL M
PROFILE (ALL FOUR CORNERS)
SECTION AB - AB
SPEAKER HOLES
SECTION AA - AA
SIDE MIC HOLE
SECTION Z - Z
SLEEP/WAKE BUTTON
SECTION W - W
SIM TRAY
(CELLULAR ONLY)
SECTION X - X
INDUCTIVE CHARGING
WINDOW FOR PENCIL
SECTION Y - Y
VOLUME BUTTONS
Apple Inc.
NONE

56.80 iPad Air（第 5 代）和 iPad Air（第 4 代）5/5

[英语]

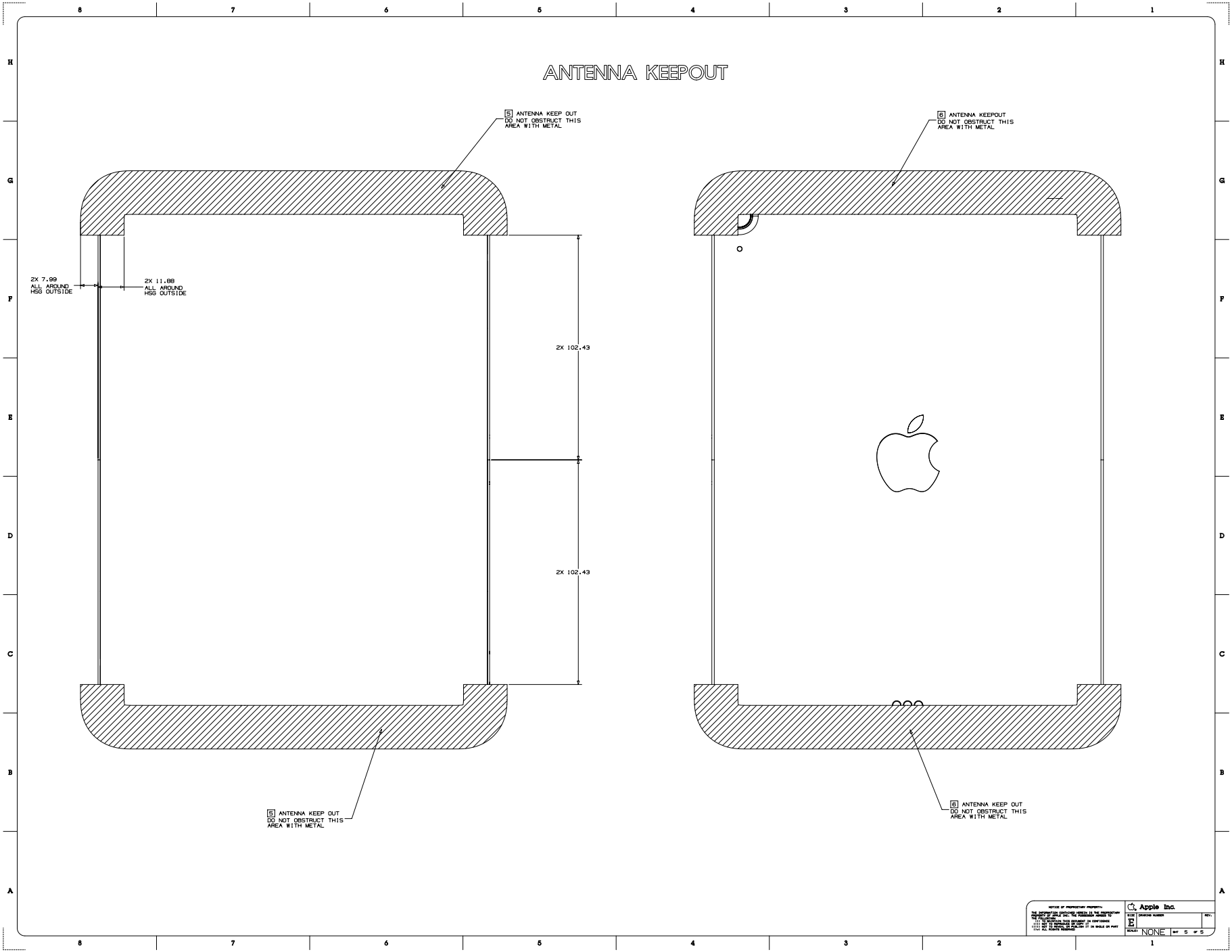

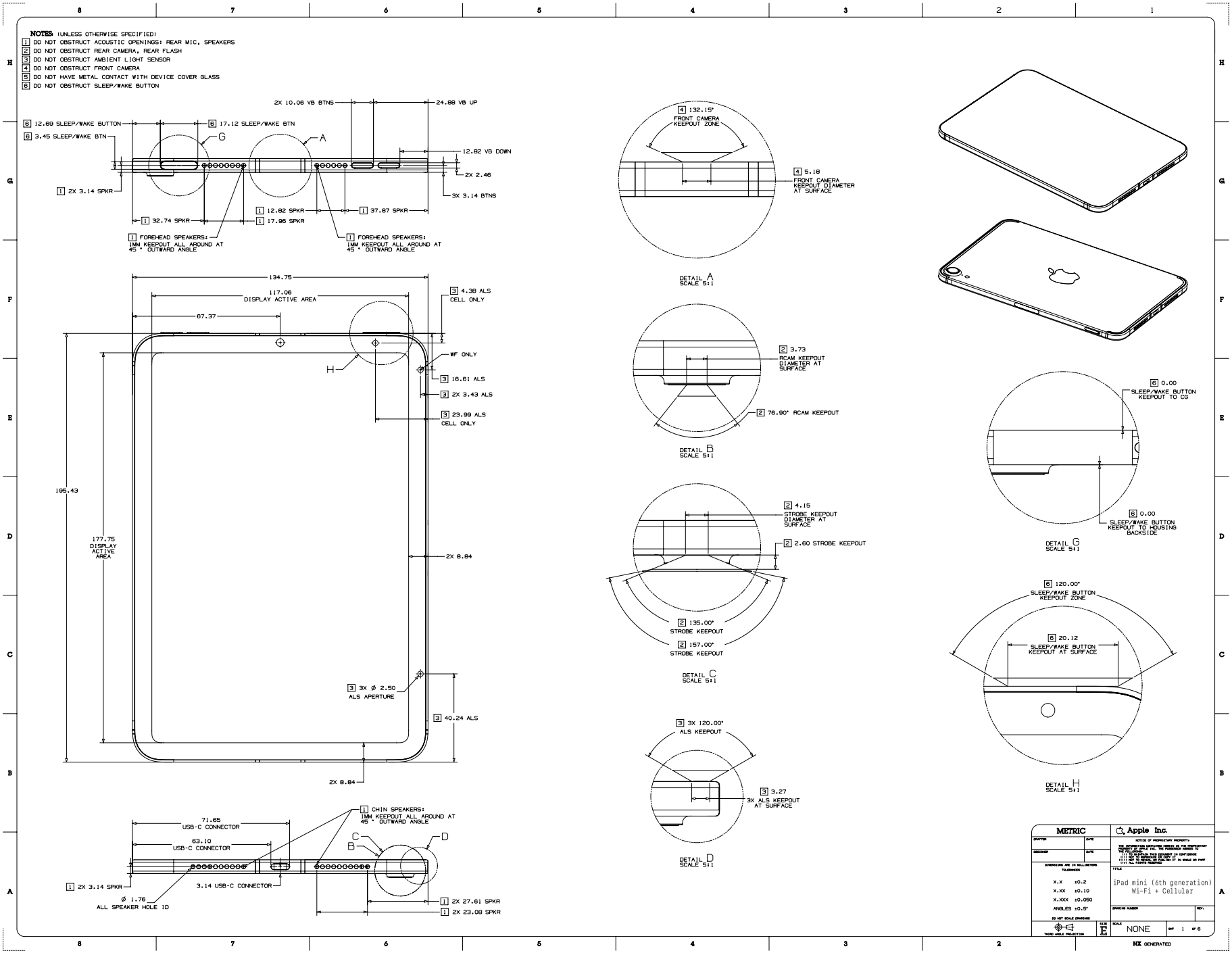
NOTES: (UNLESS OTHERWISE SPECIFIED)
1 DO NOT OBSTRUCT ACOUSTIC OPENINGS: REAR MIC, SPEAKERS
2 DO NOT OBSTRUCT REAR CAMERA, REAR FLASH
3 DO NOT OBSTRUCT AMBIENT LIGHT SENSOR
4 DO NOT OBSTRUCT FRONT CAMERA
5 DO NOT HAVE METAL CONTACT WITH DEVICE COVER GLASS
6 DO NOT OBSTRUCT SLEEP/WAKE BUTTON
2X 10.06 VB BTNS
24.88 VB UP
6 12.69 SLEEP/WAKE BUTTON
6 17.12 SLEEP/WAKE BTN
6 3.45 SLEEP/WAKE BTN
12.82 VB DOWN
2X 2.46
3X 3.14 BTNS
1 2X 3.14 SPKR
1 32.74 SPKR
1 12.82 SPKR
1 17.98 SPKR
1 37.87 SPKR
1 FOREHEAD SPEAKERS: 1MM KEEPOUT ALL AROUND AT 45 ° OUTWARD ANGLE
134.75
117.06 DISPLAY ACTIVE AREA
67.37
3 4.38 ALS CELL ONLY
WF ONLY
3 16.61 ALS
3 2X 3.43 ALS
3 23.99 ALS CELL ONLY
195.43
177.75 DISPLAY ACTIVE AREA
2X 8.84
3 3X Ø 2.50 ALS APERTURE
3 40.24 ALS
2X 8.84
1 CHIN SPEAKERS: 1MM KEEPOUT ALL AROUND AT 45 ° OUTWARD ANGLE
71.65 USB-C CONNECTOR
63.10 USB-C CONNECTOR
1 2X 3.14 SPKR
3.14 USB-C CONNECTOR
Ø 1.76 ALL SPEAKER HOLE ID
1 2X 27.61 SPKR
1 2X 23.08 SPKR
4 132.15° FRONT CAMERA KEEPOUT ZONE
4 5.18 FRONT CAMERA KEEPOUT DIAMETER AT SURFACE
DETAIL A SCALE 5:1
2 3.73 RCAM KEEPOUT DIAMETER AT SURFACE
2 76.90° RCAM KEEPOUT
DETAIL B SCALE 5:1
2 4.15 STROBE KEEPOUT DIAMETER AT SURFACE
2 2.60 STROBE KEEPOUT
2 135.00° STROBE KEEPOUT
2 157.00° STROBE KEEPOUT
DETAIL C SCALE 5:1
3 3X 120.00° ALS KEEPOUT
3 3.27 3X ALS KEEPOUT AT SURFACE
DETAIL D SCALE 5:1
6 0.00 SLEEP/WAKE BUTTON KEEPOUT TO CG
6 0.00 SLEEP/WAKE BUTTON KEEPOUT TO HOUSING BACKSIDE
DETAIL G SCALE 5:1
6 120.00° SLEEP/WAKE BUTTON KEEPOUT ZONE
6 20.12 SLEEP/WAKE BUTTON KEEPOUT AT SURFACE
DETAIL H SCALE 5:1
METRIC
Apple Inc.
X.X ±0.2
X.XX ±0.10
X.XXX ±0.050
ANGLES ±0.5°
iPad mini (6th generation)
Wi-Fi + Cellular
NONE
NX GENERATED

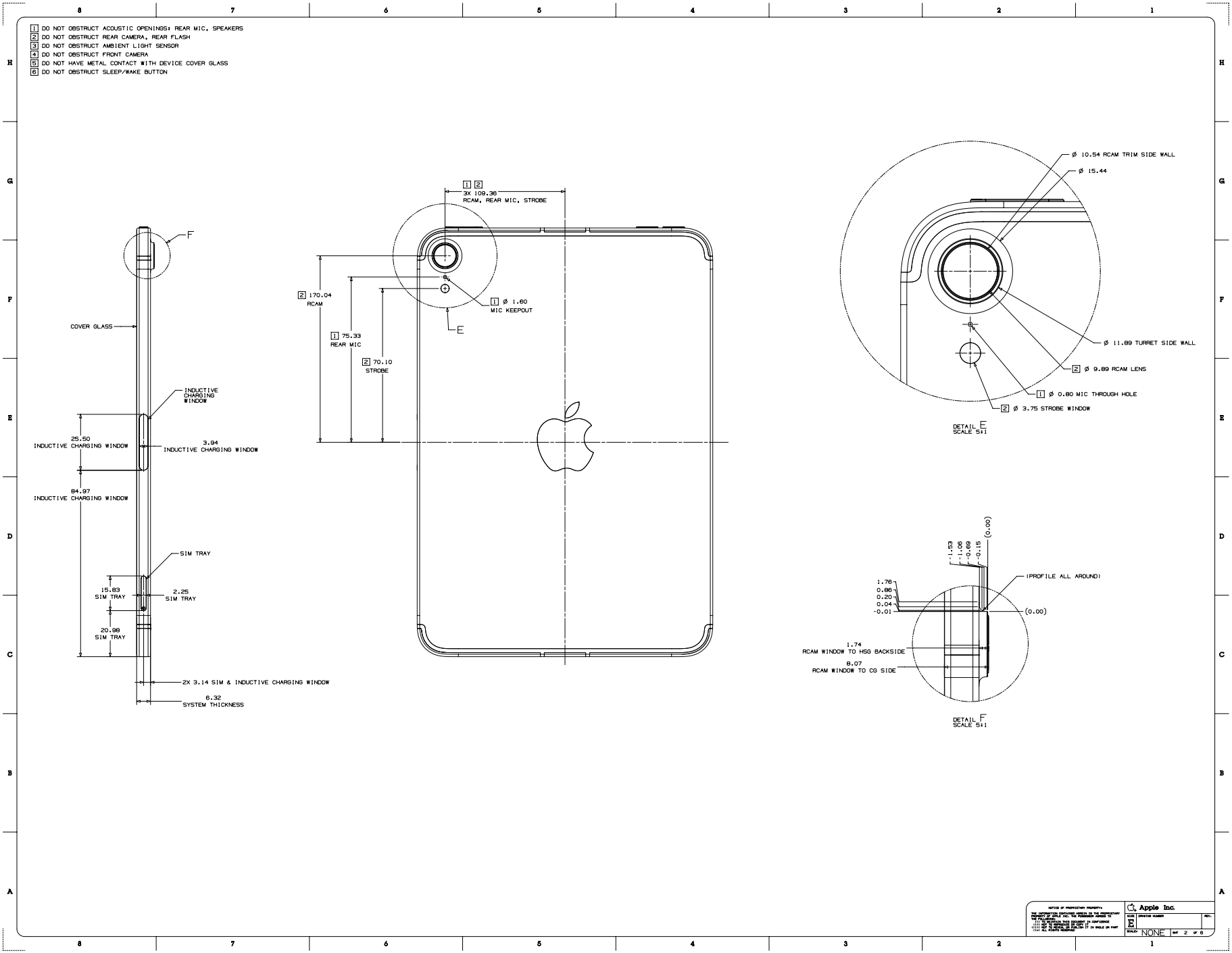
1 DO NOT OBSTRUCT ACOUSTIC OPENINGS: REAR MIC, SPEAKERS
2 DO NOT OBSTRUCT REAR CAMERA, REAR FLASH
3 DO NOT OBSTRUCT AMBIENT LIGHT SENSOR
4 DO NOT OBSTRUCT FRONT CAMERA
5 DO NOT HAVE METAL CONTACT WITH DEVICE COVER GLASS
6 DO NOT OBSTRUCT SLEEP/WAKE BUTTON
COVER GLASS
INDUCTIVE CHARGING WINDOW
25.50 INDUCTIVE CHARGING WINDOW
3.94 INDUCTIVE CHARGING WINDOW
84.97 INDUCTIVE CHARGING WINDOW
SIM TRAY
15.83 SIM TRAY
2.25 SIM TRAY
20.98 SIM TRAY
2X 3.14 SIM & INDUCTIVE CHARGING WINDOW
6.32 SYSTEM THICKNESS
3X 109.38 RCAM, REAR MIC, STROBE
170.04 RCAM
Ø 1.60 MIC KEEPOUT
75.33 REAR MIC
70.10 STROBE
Ø 10.54 RCAM TRIM SIDE WALL
Ø 15.44
Ø 11.89 TURRET SIDE WALL
Ø 9.89 RCAM LENS
Ø 0.80 MIC THROUGH HOLE
Ø 3.75 STROBE WINDOW
DETAIL E SCALE 5:1
1.76
0.86
0.20
0.04
-0.01
-1.53
-1.68
-0.68
-0.15
(0.00)
(PROFILE ALL AROUND)
1.74 RCAM WINDOW TO HSG BACKSIDE
8.07 RCAM WINDOW TO CG SIDE
DETAIL F SCALE 5:1
Apple Inc.
NONE

MAGNET, HES, COMPASS DETAIL

SYSTEM/ENCLOSURE SIDE MAGNETS AND SENSORS

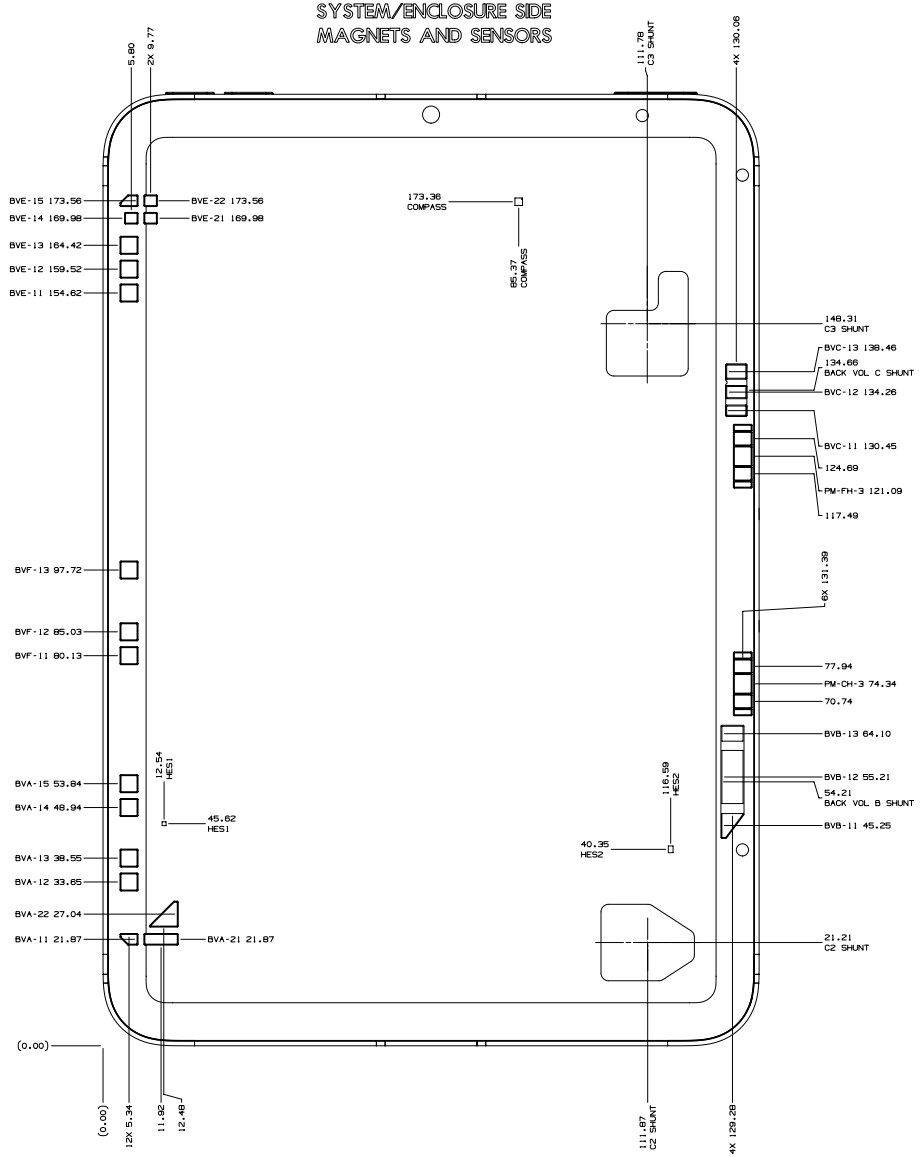

LOCATION	POLARITY TOWARD SURFACE OF ENCLOSURE
PM-FH-3	S
PM-CH-3	S
BVA-11	N
BVA-12	N
BVA-13	S
BVA-14	N
BVA-15	S
BVA-21	S
BVA-22	N
BVB-11	N
BVB-12	S
BVB-13	N
BVC-11	S
BVC-12	N
BVC-13	S
BVE-11	S
BVE-12	N
BVE-13	S
BVE-14	N
BVE-15	S
BVE-21	S
BVE-22	N
BVF-11	N
BVF-12	S
BVF-13	N

Apple Inc.

SCALE NONE SHT 3 OF 8

MAGNET, HES, COMPASS DETAIL -PT 2

TOP MODULE MAGNETS
POLARITY AT SURFACE OF COVER GLASS INDICATED

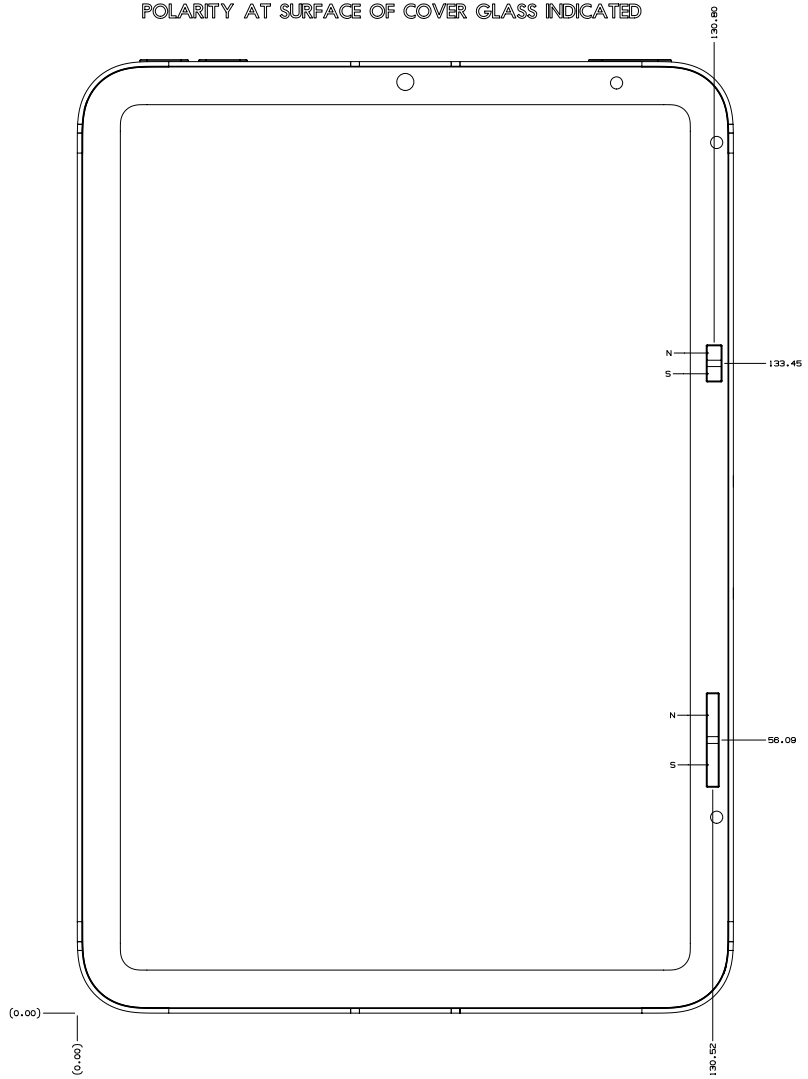

Apple Inc.
SIZE E
SCALE NONE

56.85 iPad mini（第 6 代）5/6

[英语]

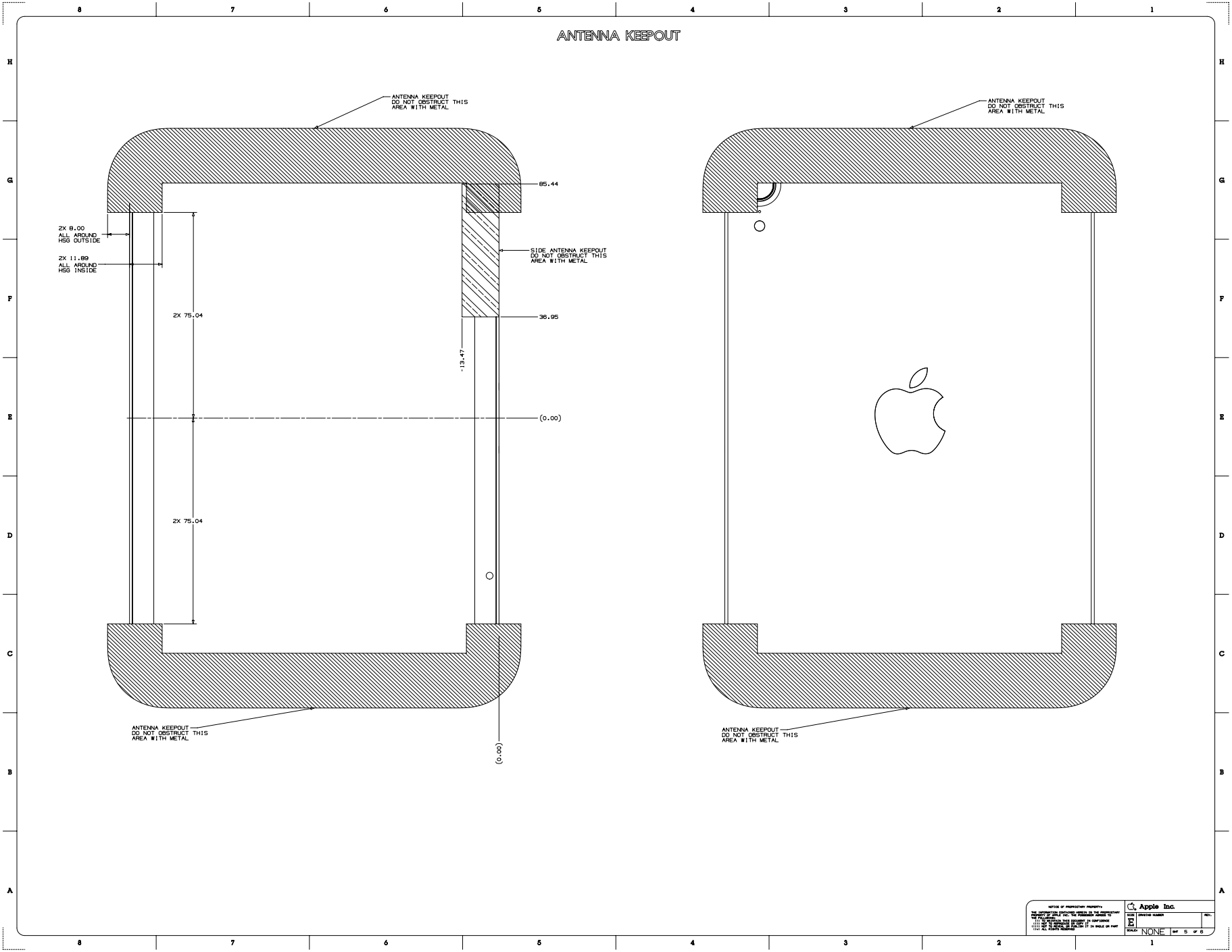

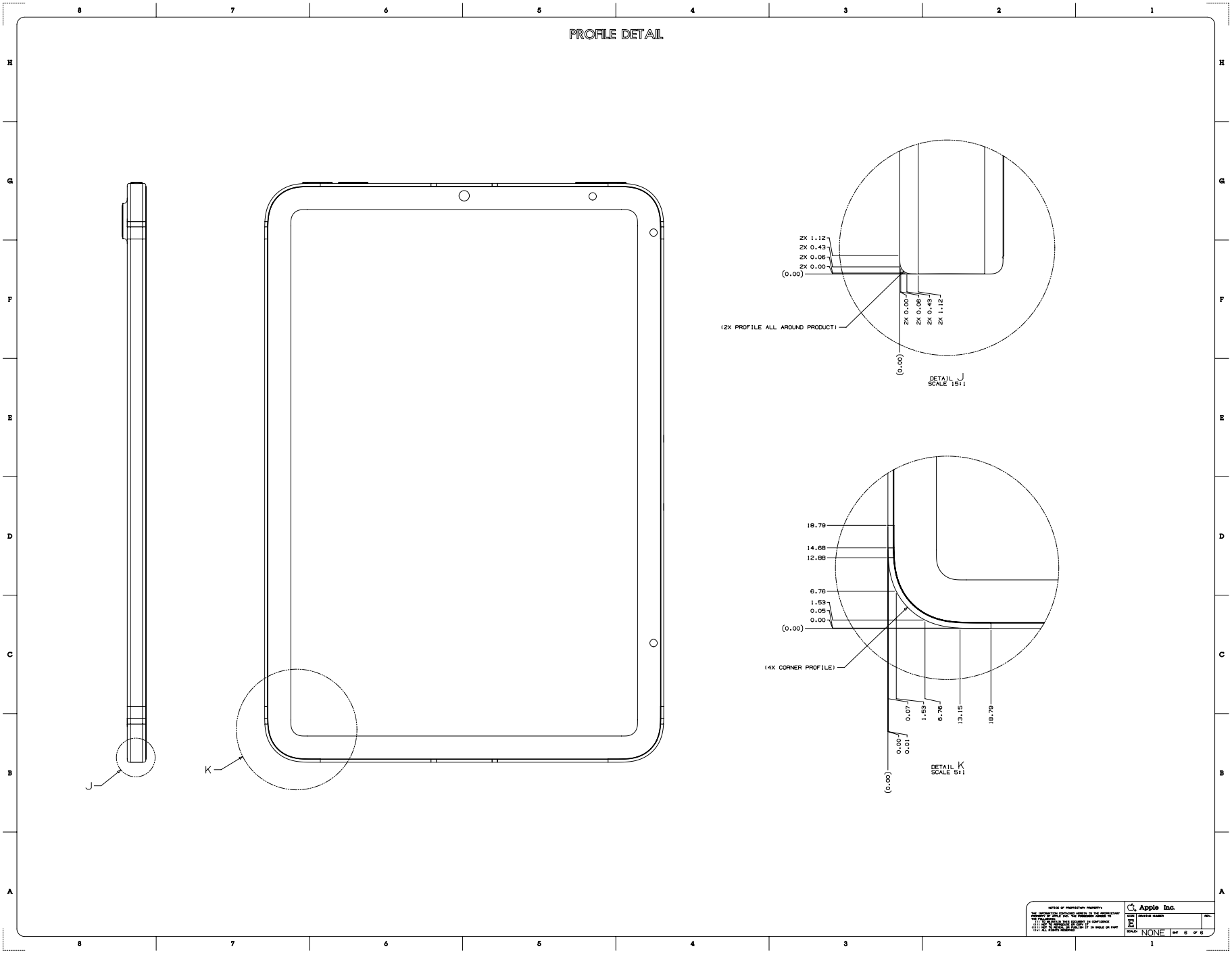
PROFILE DETAIL
J
K
2X 1.12
2X 0.43
2X 0.06
2X 0.00
(0.00)
(2X PROFILE ALL AROUND PRODUCT)
DETAIL J
SCALE 15:1
18.79
14.68
12.88
6.76
1.53
0.05
0.00
(0.00)
(4X CORNER PROFILE)
DETAIL K
SCALE 5:1
Apple Inc.
NONE

56.87 iPad（第 9 代）、iPad（第 8 代）和 iPad（第 7 代）1/4

[英语]

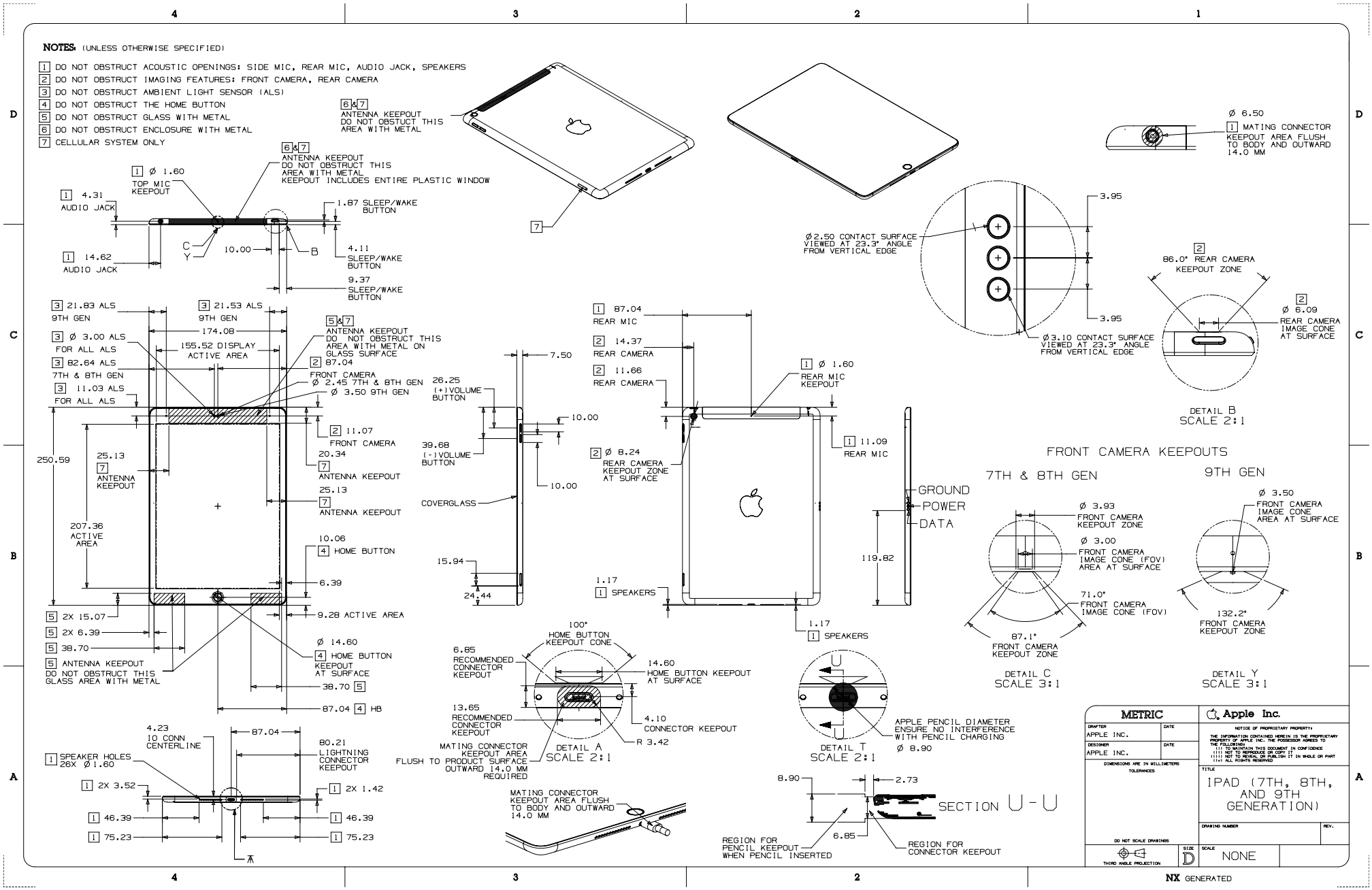

56.88 iPad（第 9 代）、iPad（第 8 代）和 iPad（第 7 代）2/4

[英语]

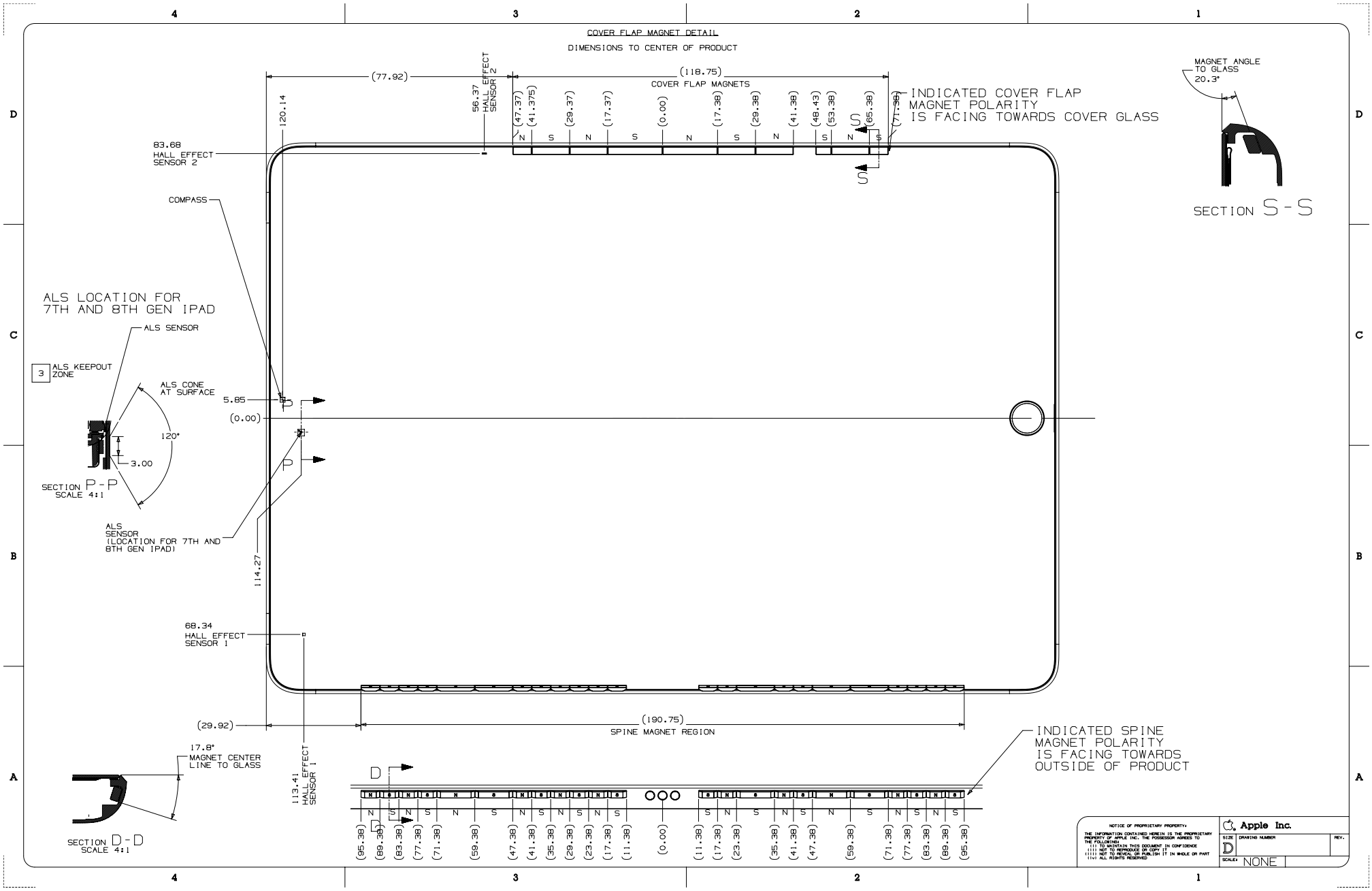

56.89 iPad（第 9 代）、iPad（第 8 代）和 iPad（第 7 代）3/4

[英语]

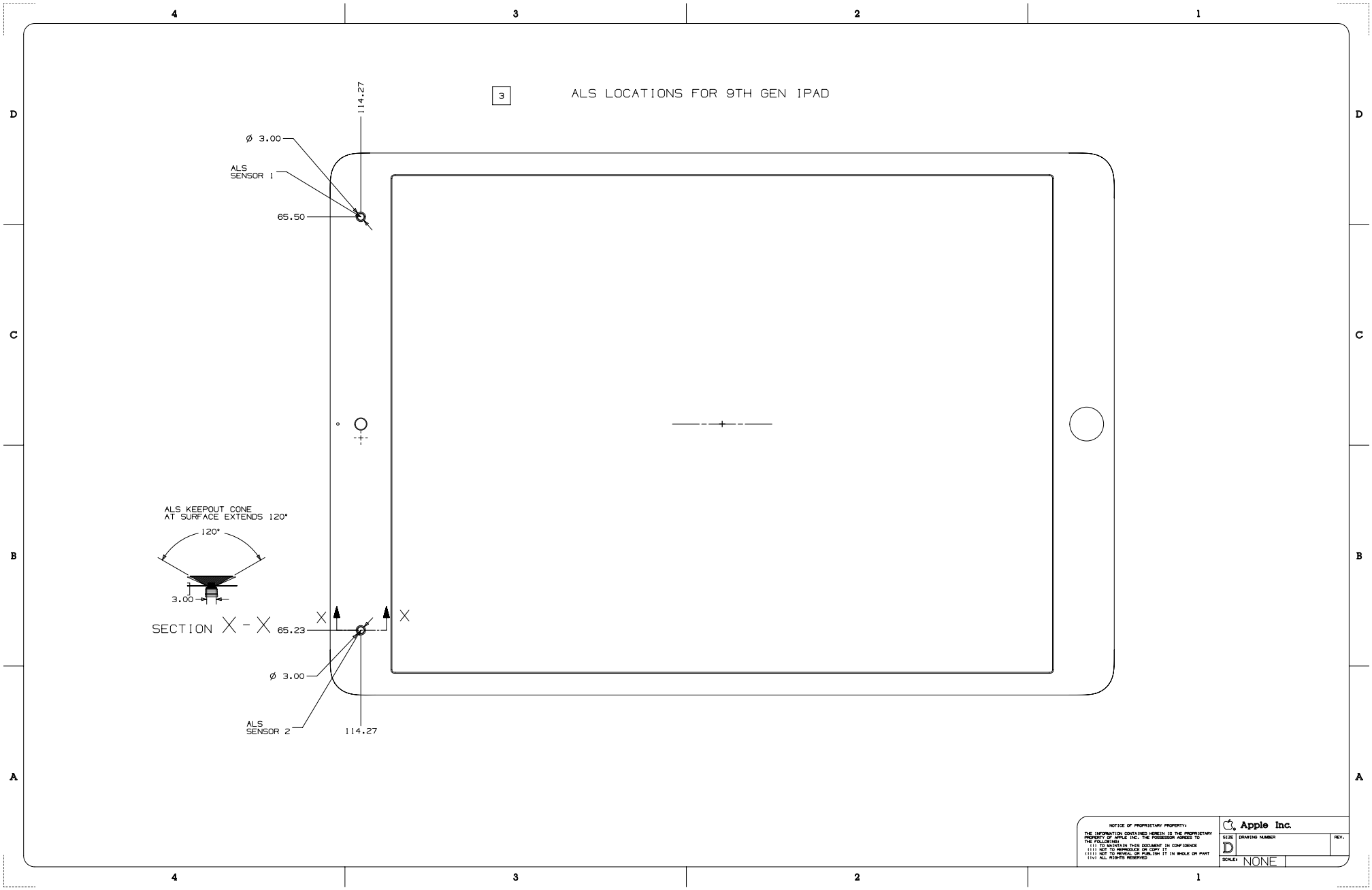

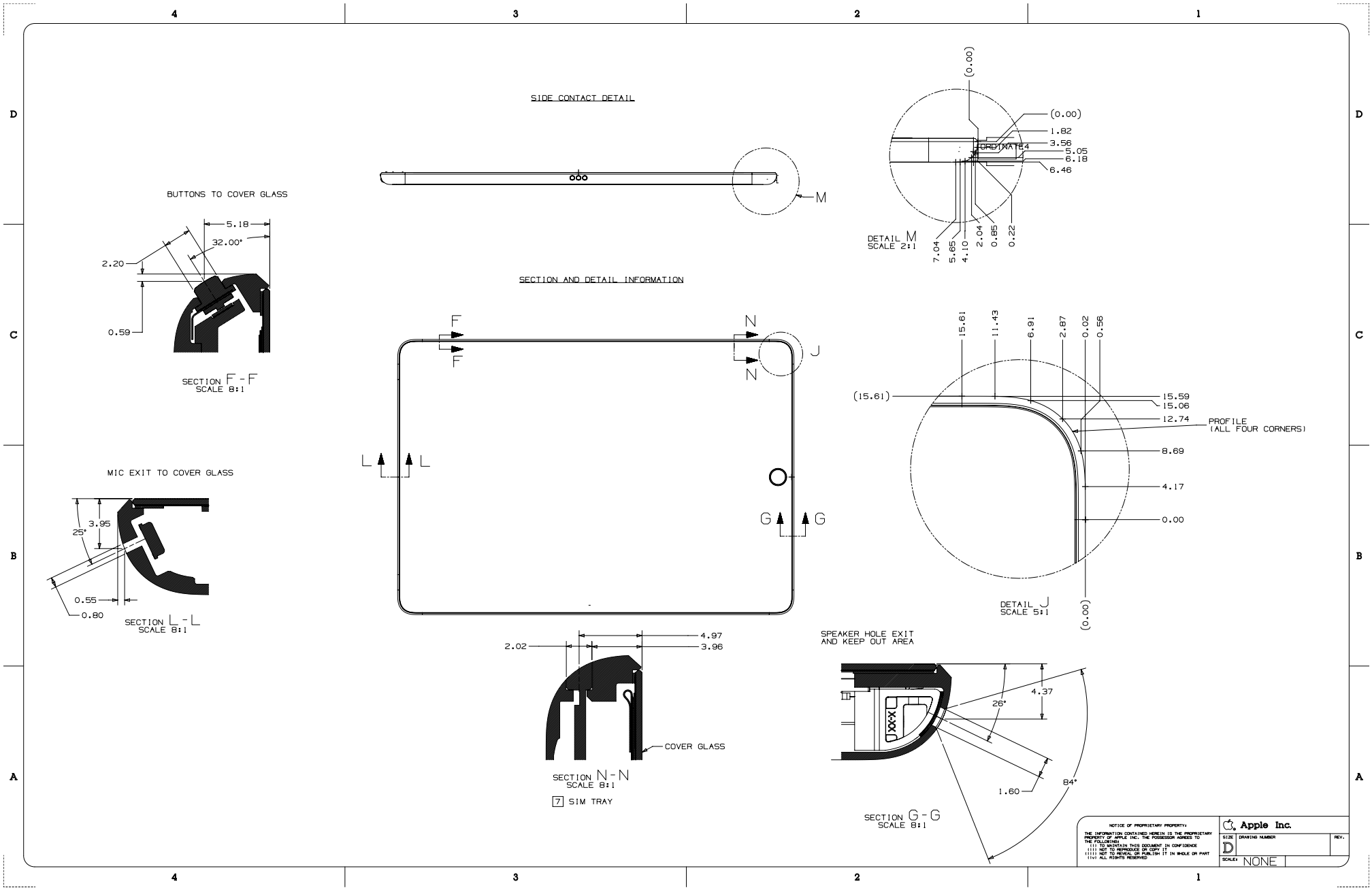
SIDE CONTACT DETAIL
M
DETAIL M
SCALE 2:1
(0.00)
(0.00)
1.82
3.56
5.05
6.18
6.46
COORDINATE4
7.04
5.65
4.10
2.04
0.85
0.22
BUTTONS TO COVER GLASS
5.18
32.00°
2.20
0.59
SECTION F - F
SCALE 8:1
SECTION AND DETAIL INFORMATION
F
F
N
N
J
L
L
G
G
MIC EXIT TO COVER GLASS
3.95
25°
0.55
0.80
SECTION L - L
SCALE 8:1
15.61
11.43
6.91
2.87
0.02
0.56
(15.61)
15.59
15.06
12.74
PROFILE
(ALL FOUR CORNERS)
8.69
4.17
0.00
(0.00)
DETAIL J
SCALE 5:1
4.97
2.02
3.96
COVER GLASS
SECTION N - N
SCALE 8:1
7 SIM TRAY
SPEAKER HOLE EXIT
AND KEEP OUT AREA
4.37
26°
1.60
84°
SECTION G - G
SCALE 8:1
NOTICE OF PROPRIETARY PROPERTY:
THE INFORMATION CONTAINED HEREIN IS THE PROPRIETARY PROPERTY OF APPLE INC. THE POSSESSOR AGREES TO THE FOLLOWING:
(i) TO MAINTAIN THIS DOCUMENT IN CONFIDENCE
(ii) NOT TO REPRODUCE OR COPY IT
(iii) NOT TO REVEAL OR PUBLISH IT IN WHOLE OR PART
(iv) ALL RIGHTS RESERVED
Apple Inc.
SIZE
D
DRAWING NUMBER
REV.
SCALE: NONE

56.91 12.9 英寸 iPad Pro（第 5 代）1/5

[英语]

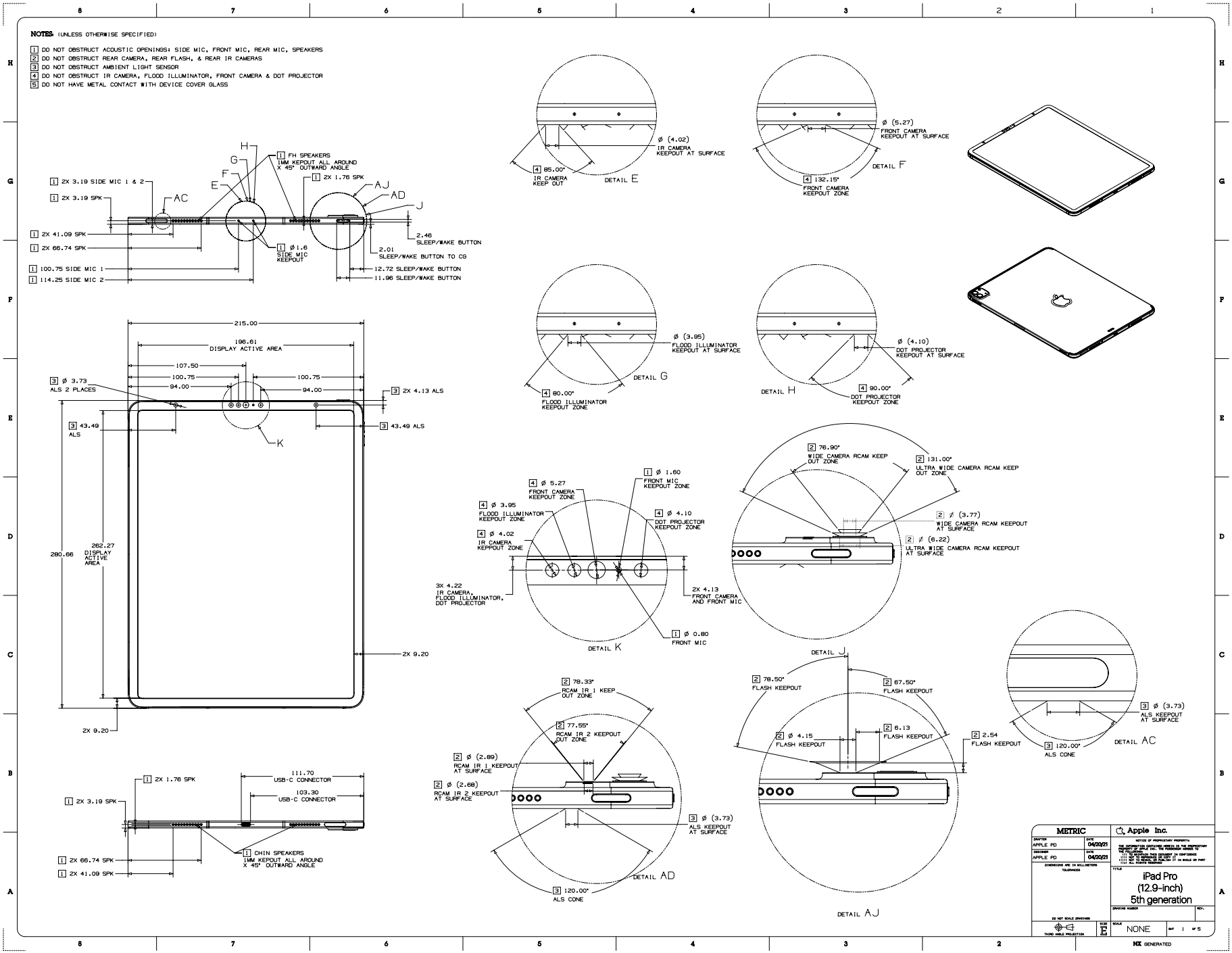

56.92 12.9 英寸 iPad Pro（第 5 代）2/5

[英语]

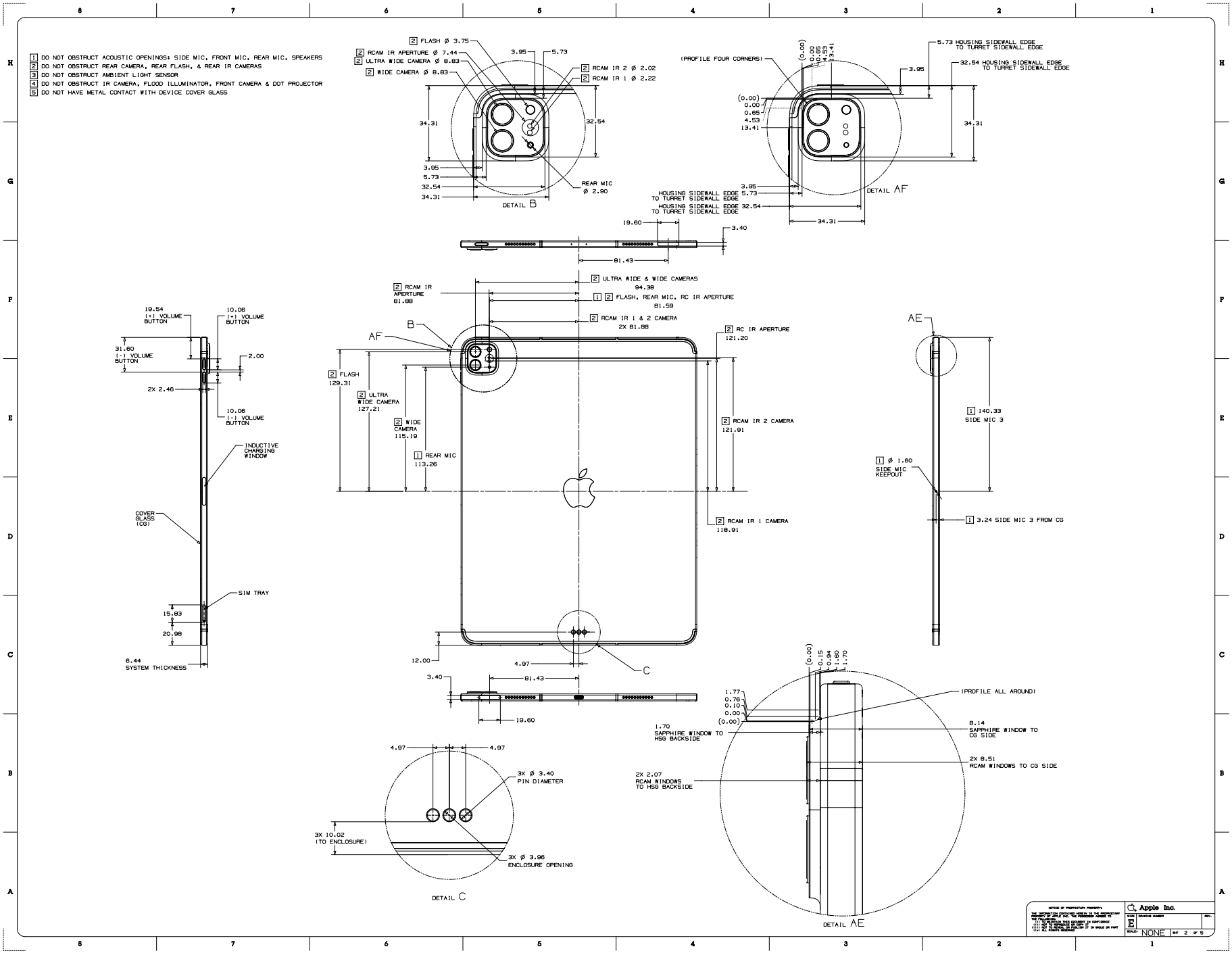

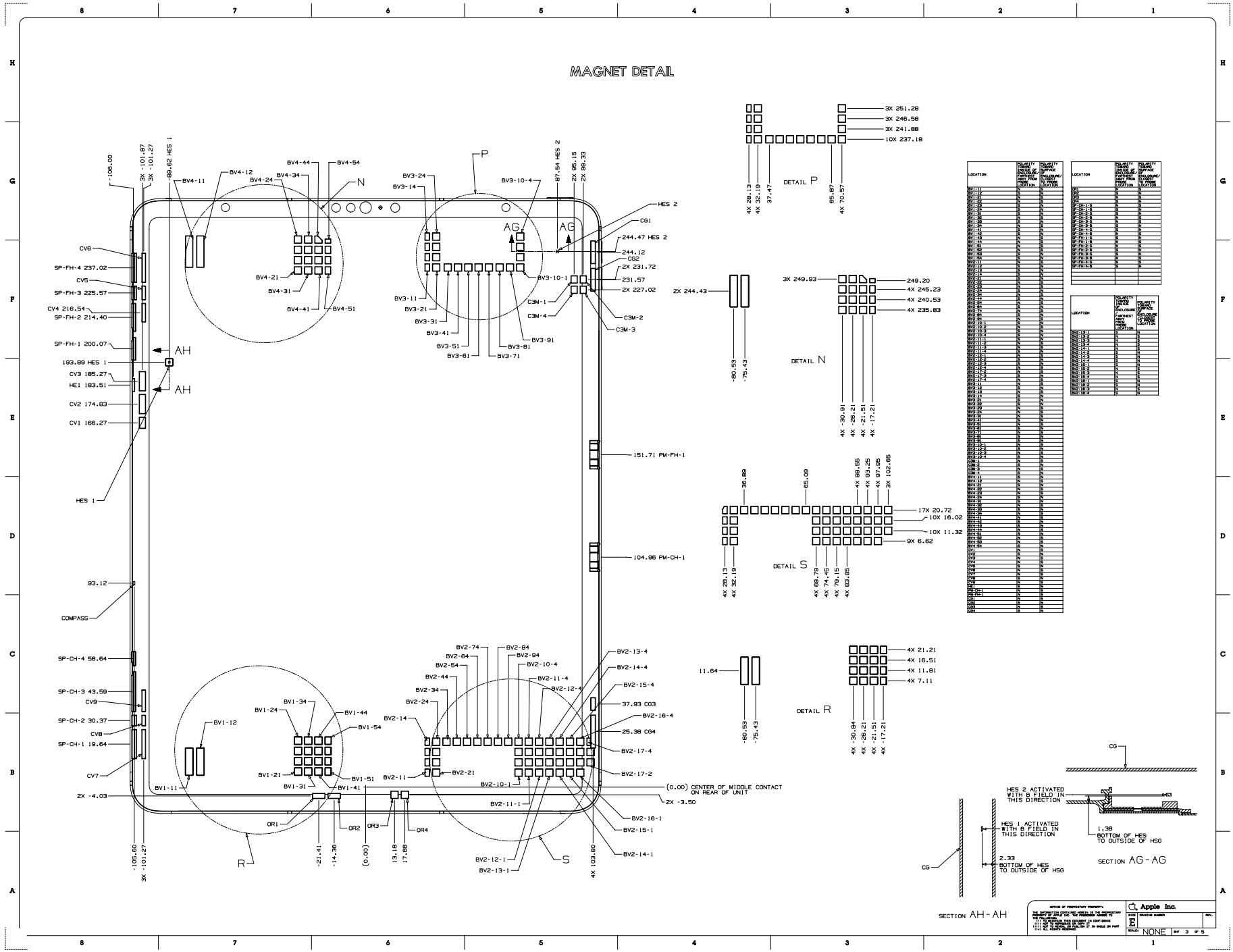
MAGNET DETAIL
DETAIL P
DETAIL N
DETAIL S
DETAIL R
SECTION AG - AG
SECTION AH - AH
HES 2 ACTIVATED WITH B FIELD IN THIS DIRECTION
HES 1 ACTIVATED WITH B FIELD IN THIS DIRECTION
1.38 BOTTOM OF HES TO OUTSIDE OF HSG
2.33 BOTTOM OF HES TO OUTSIDE OF HSG
(0.00) CENTER OF MIDDLE CONTACT ON REAR OF UNIT
Apple Inc.

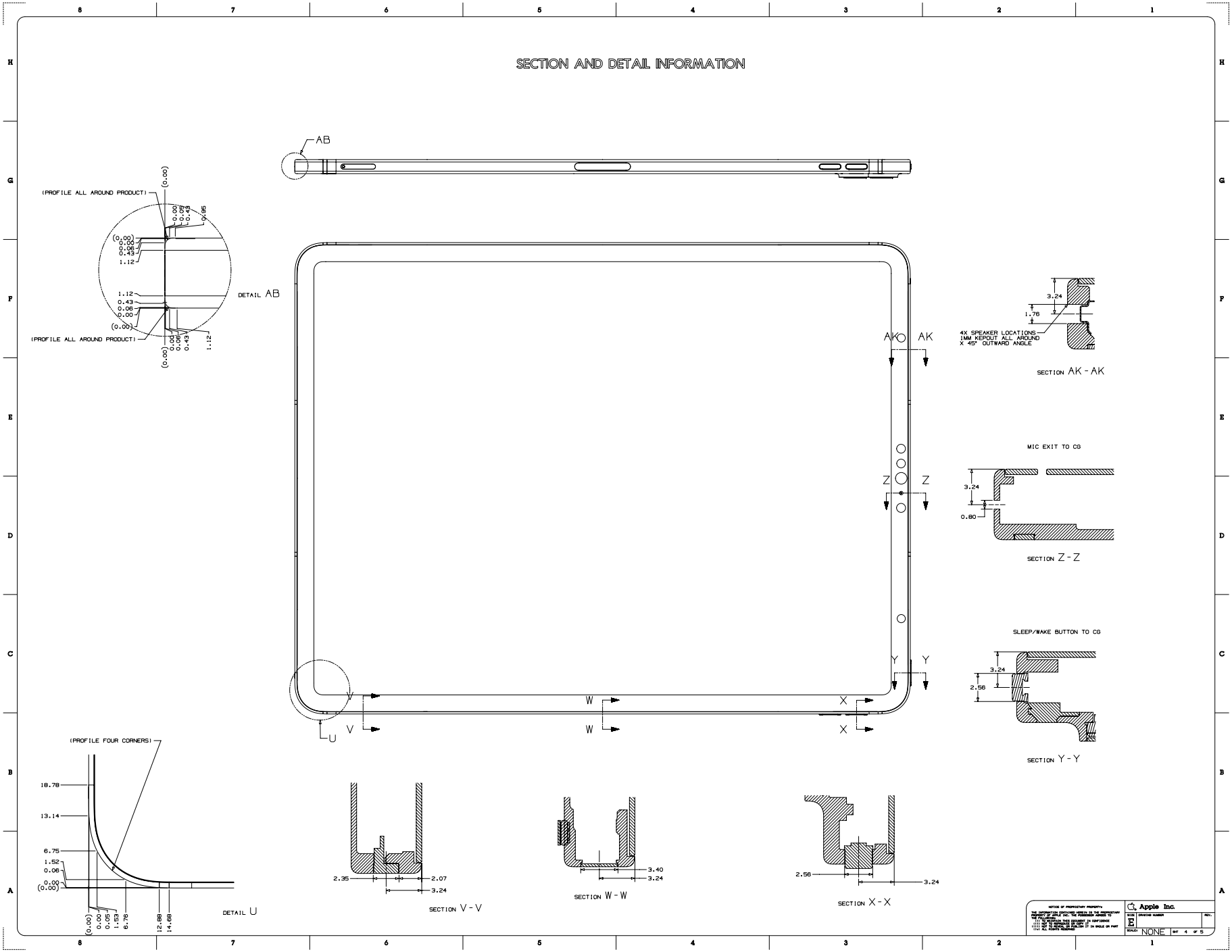
SECTION AND DETAIL INFORMATION
AB
DETAIL AB
(PROFILE ALL AROUND PRODUCT)
AK
AK
SECTION AK - AK
4X SPEAKER LOCATIONS
1MM KEPOUT ALL AROUND
X 45° OUTWARD ANGLE
MIC EXIT TO CG
Z
Z
SECTION Z - Z
SLEEP/WAKE BUTTON TO CG
Y
Y
SECTION Y - Y
U
V
V
W
W
X
X
(PROFILE FOUR CORNERS)
DETAIL U
SECTION V - V
SECTION W - W
SECTION X - X
Apple Inc.
NONE

56.95 12.9 英寸 iPad Pro（第 5 代）5/5

[英语]

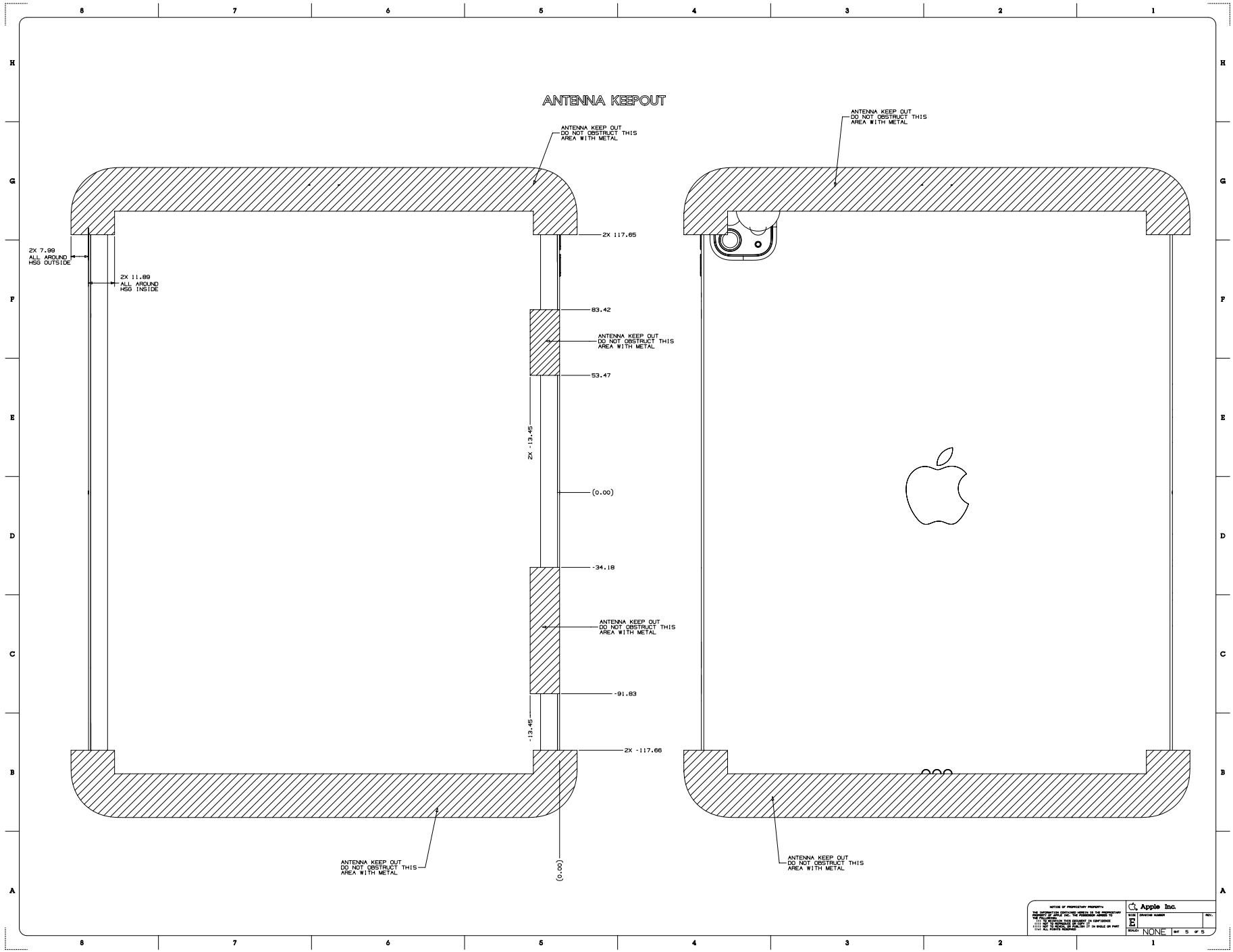

56.96 11 英寸 iPad Pro（第 3 代）1/5

[英语]

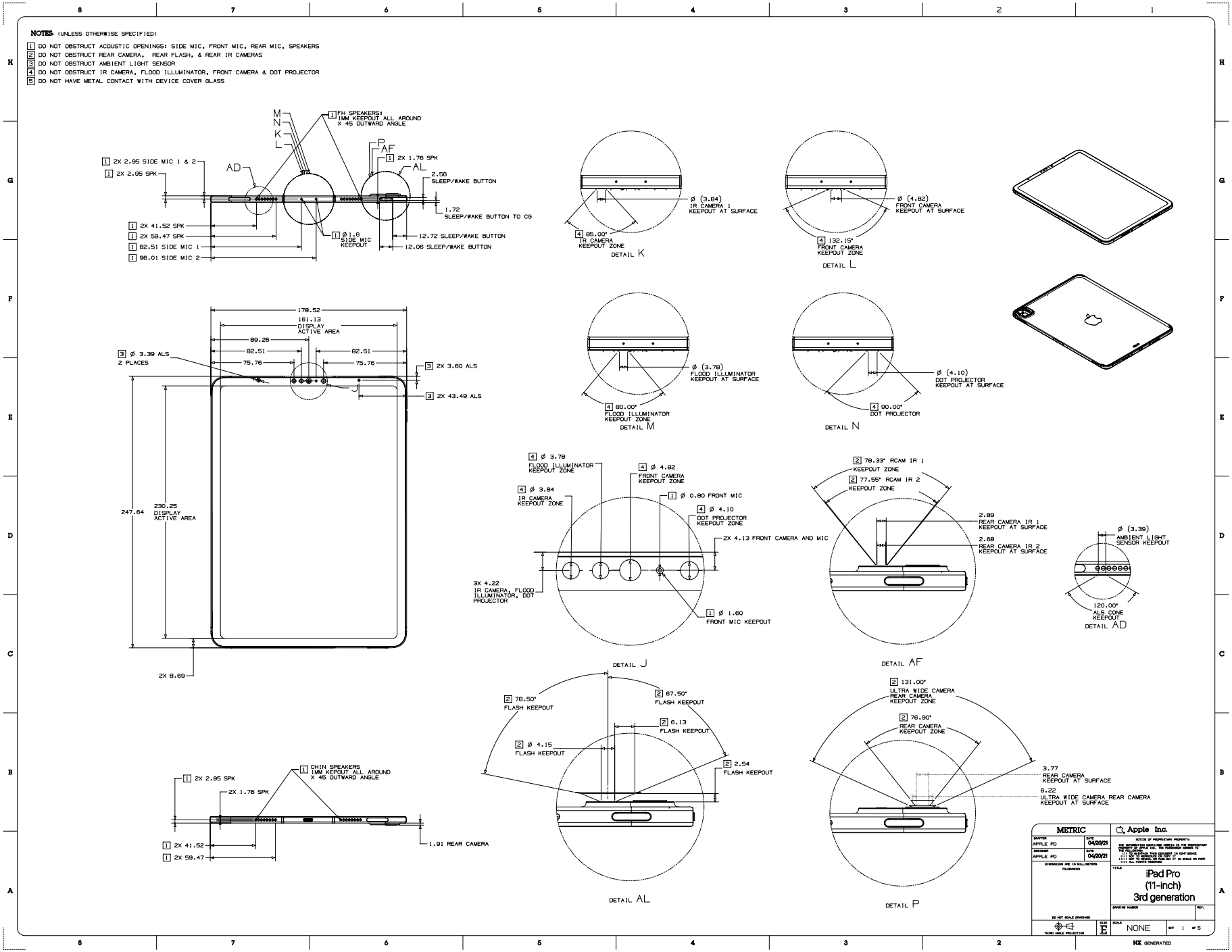

56.97 11 英寸 iPad Pro（第 3 代）2/5

[英语]

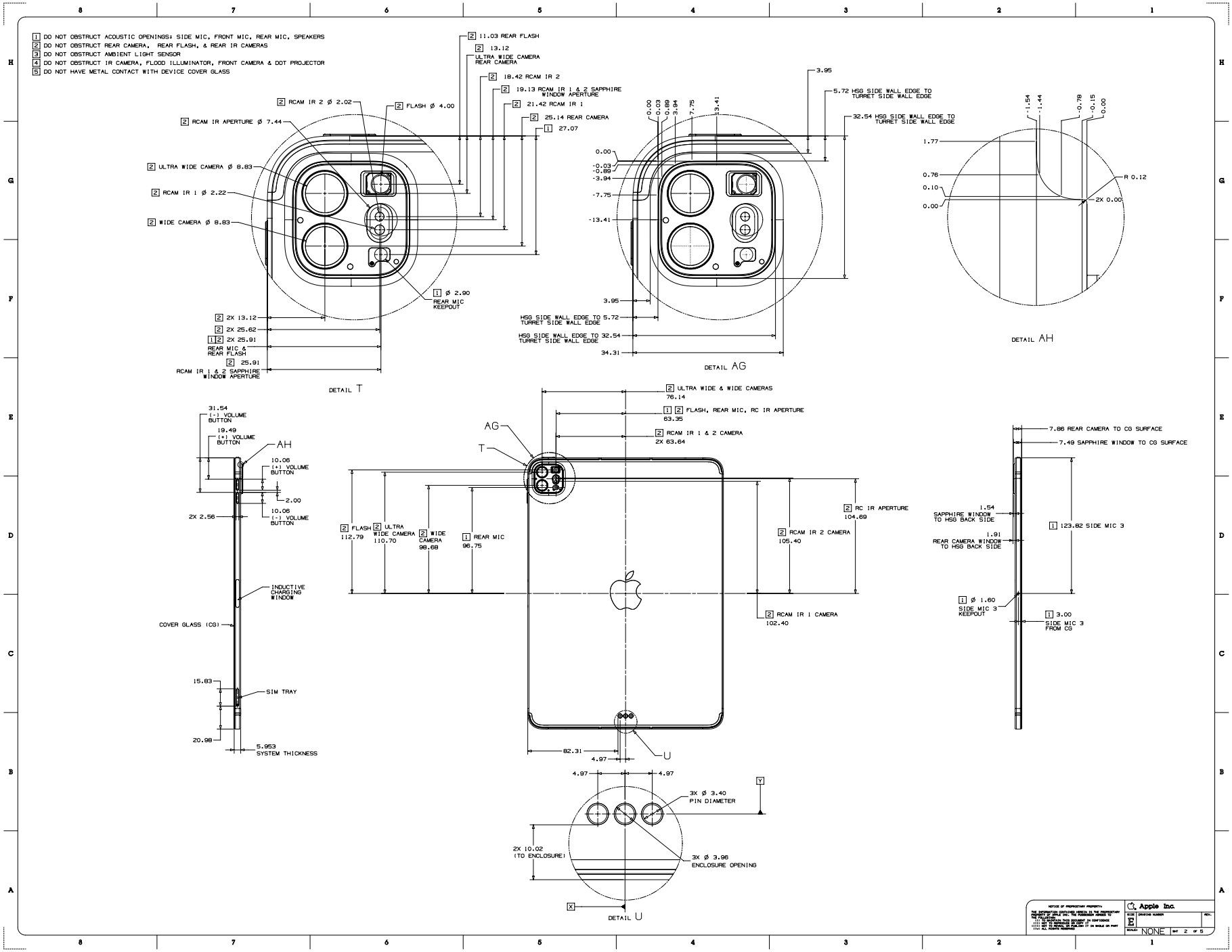

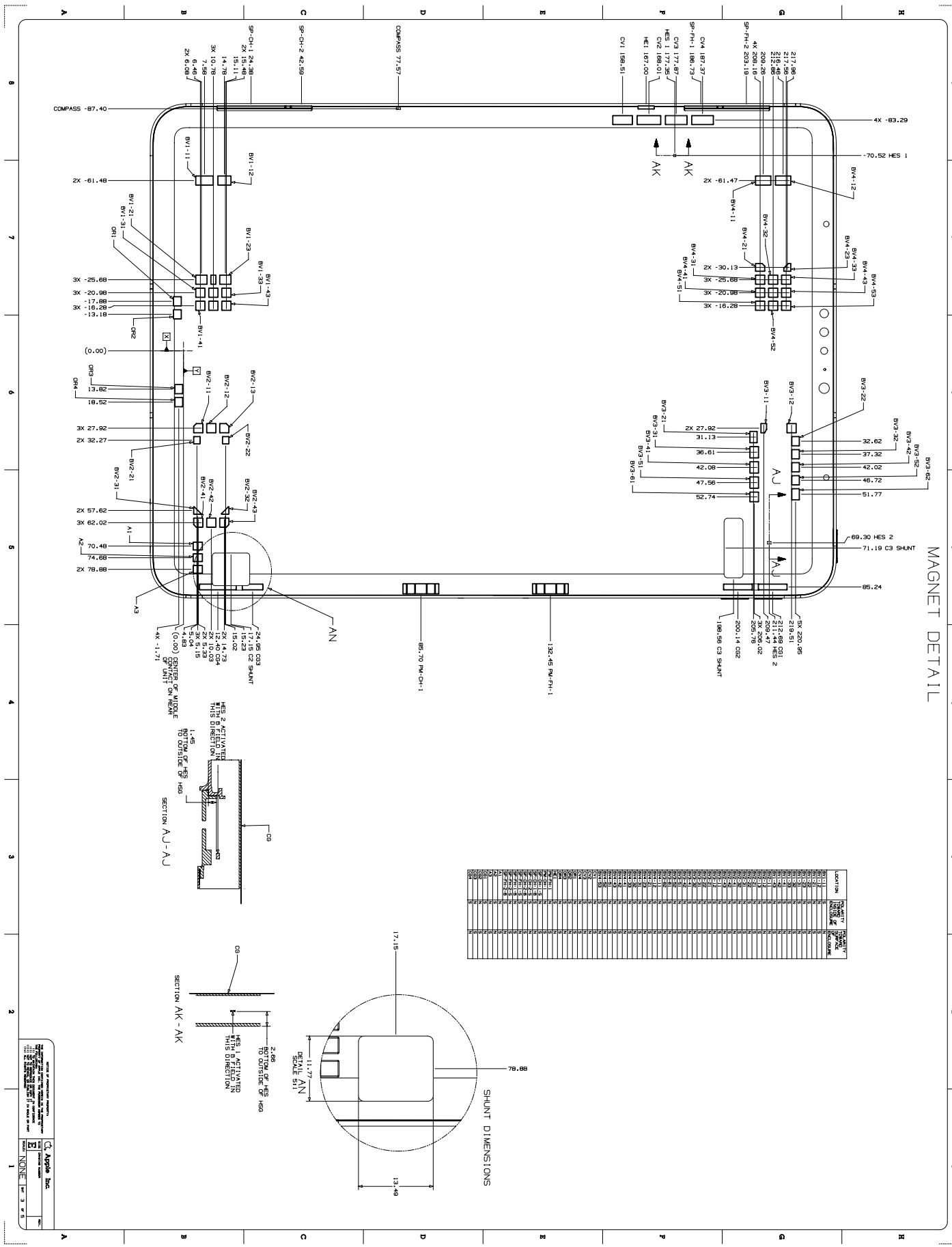
MAGNET DETAIL
SHUNT DIMENSIONS
SECTION AJ - AJ
SECTION AK - AK
DETAIL AN
SCALE 5:1
HES 2 ACTIVATED WITH B FIELD IN THIS DIRECTION
BOTTOM OF HES TO OUTSIDE OF HSG
HES 1 ACTIVATED THIS DIRECTION
CENTER OF MIDDLE CONTACT ON REAR UNIT
69.30 HES 2
71.19 C3 SHUNT
85.24
78.88
17.15
13.49
11.77
2.66
1.45
Apple Inc.
NONE

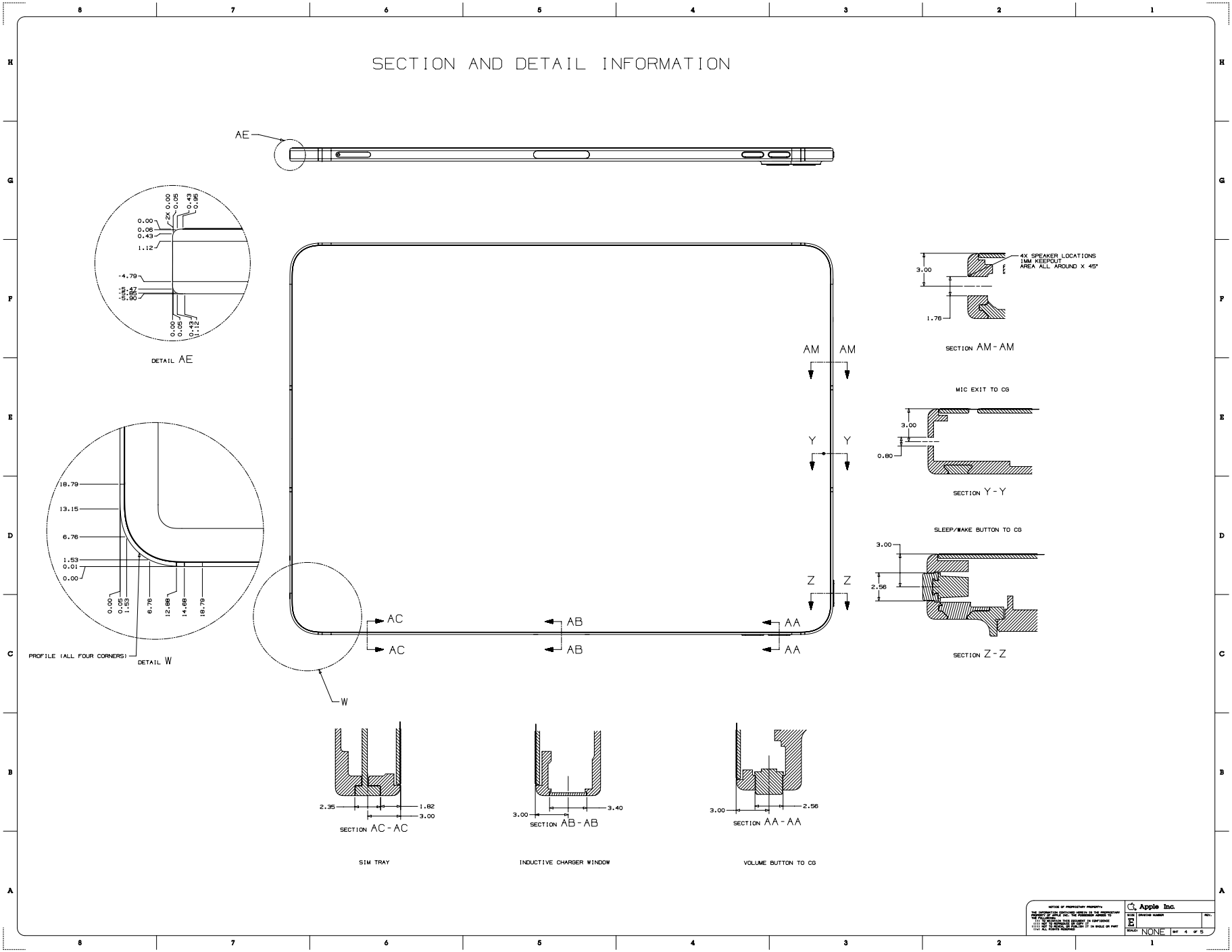
SECTION AND DETAIL INFORMATION
AE
DETAIL AE
PROFILE (ALL FOUR CORNERS)
DETAIL W
W
AC
AC
AB
AB
AA
AA
AM
AM
Y
Y
Z
Z
4X SPEAKER LOCATIONS
1MM KEEPOUT
AREA ALL AROUND X 45°
SECTION AM-AM
MIC EXIT TO CG
SECTION Y-Y
SLEEP/WAKE BUTTON TO CG
SECTION Z-Z
SECTION AC-AC
SIM TRAY
SECTION AB-AB
INDUCTIVE CHARGER WINDOW
SECTION AA-AA
VOLUME BUTTON TO CG
Apple Inc.

56.100 11 英寸 iPad Pro（第 3 代）5/5

[英语]

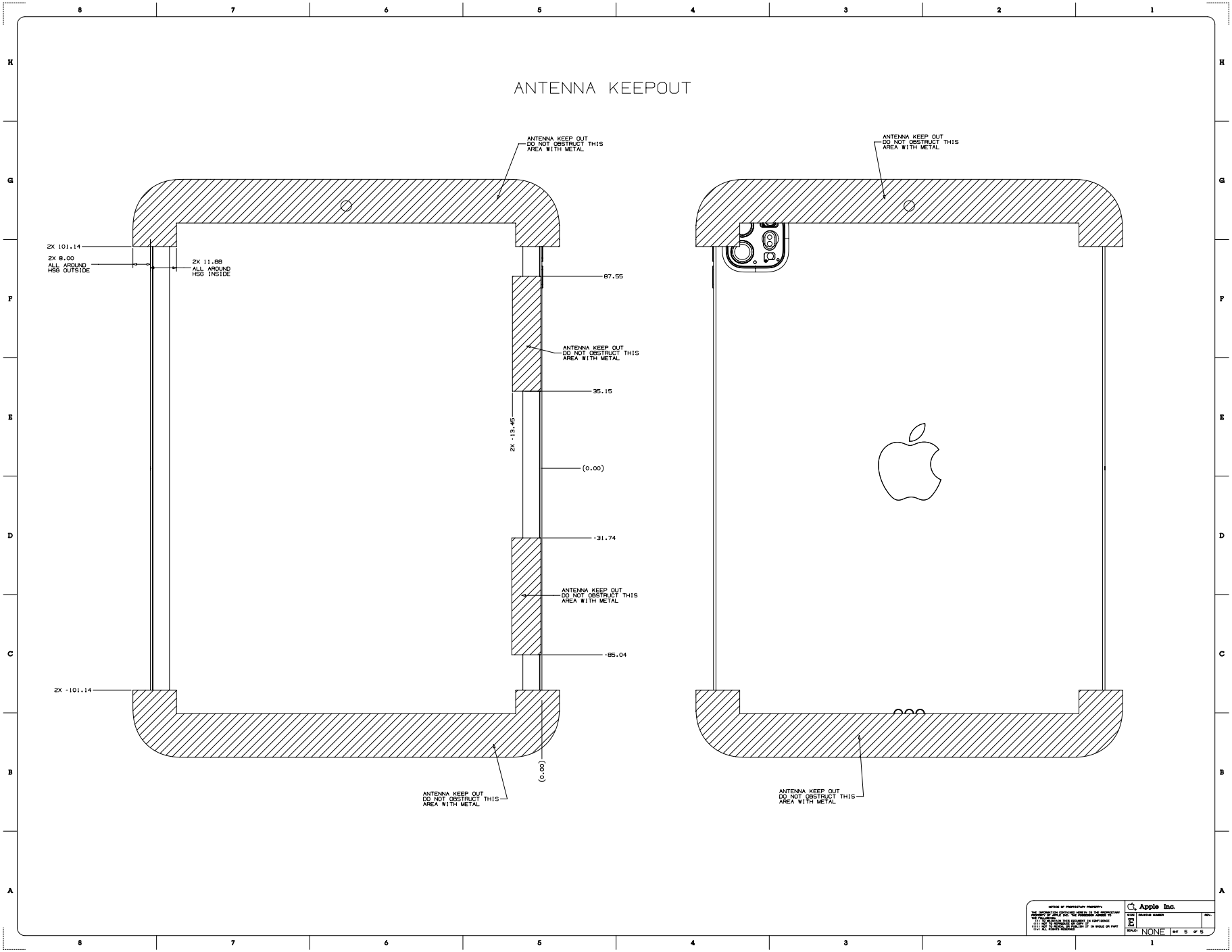

56.101 12.9 英寸 iPad Pro（第 4 代）1/5

[英语]

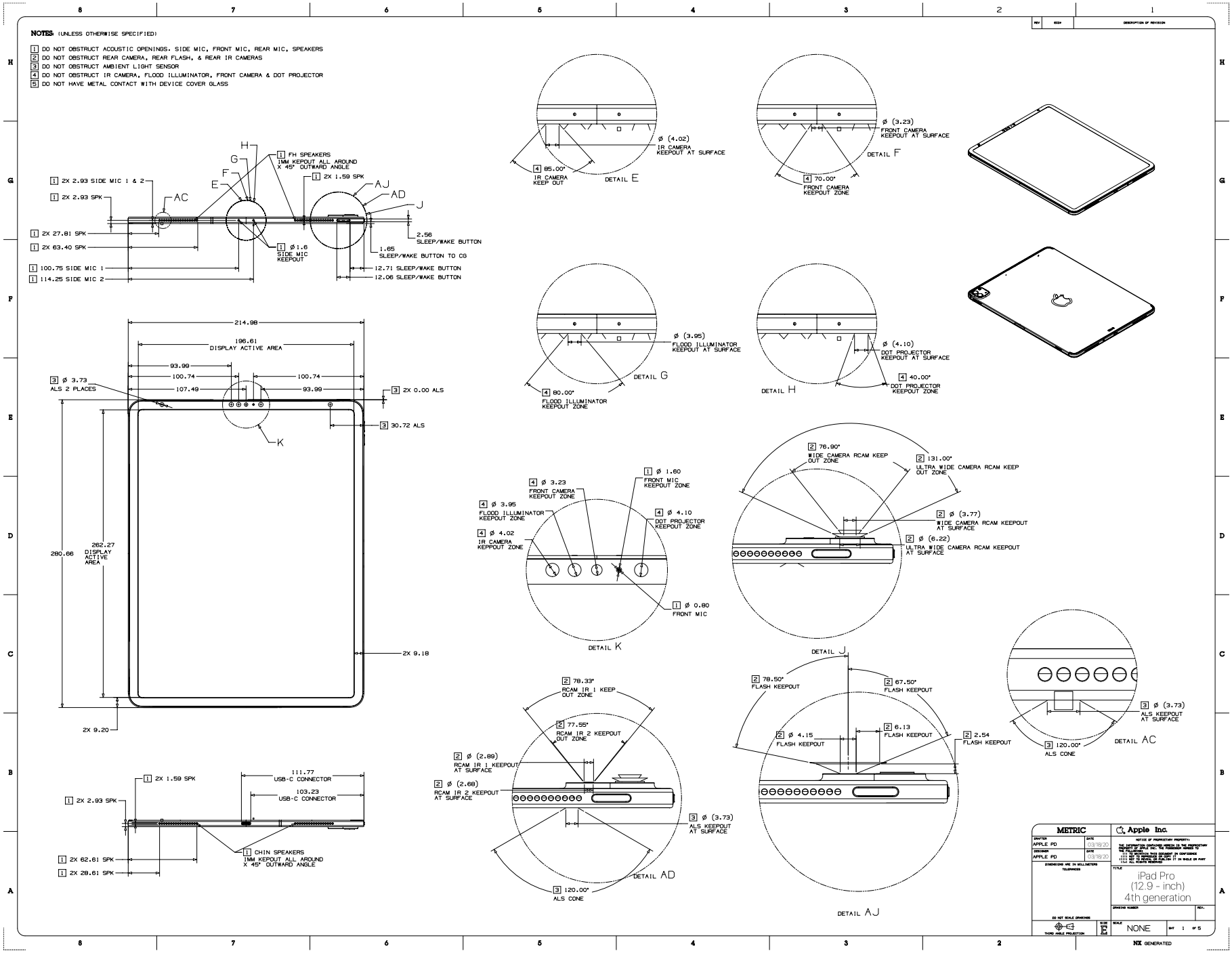

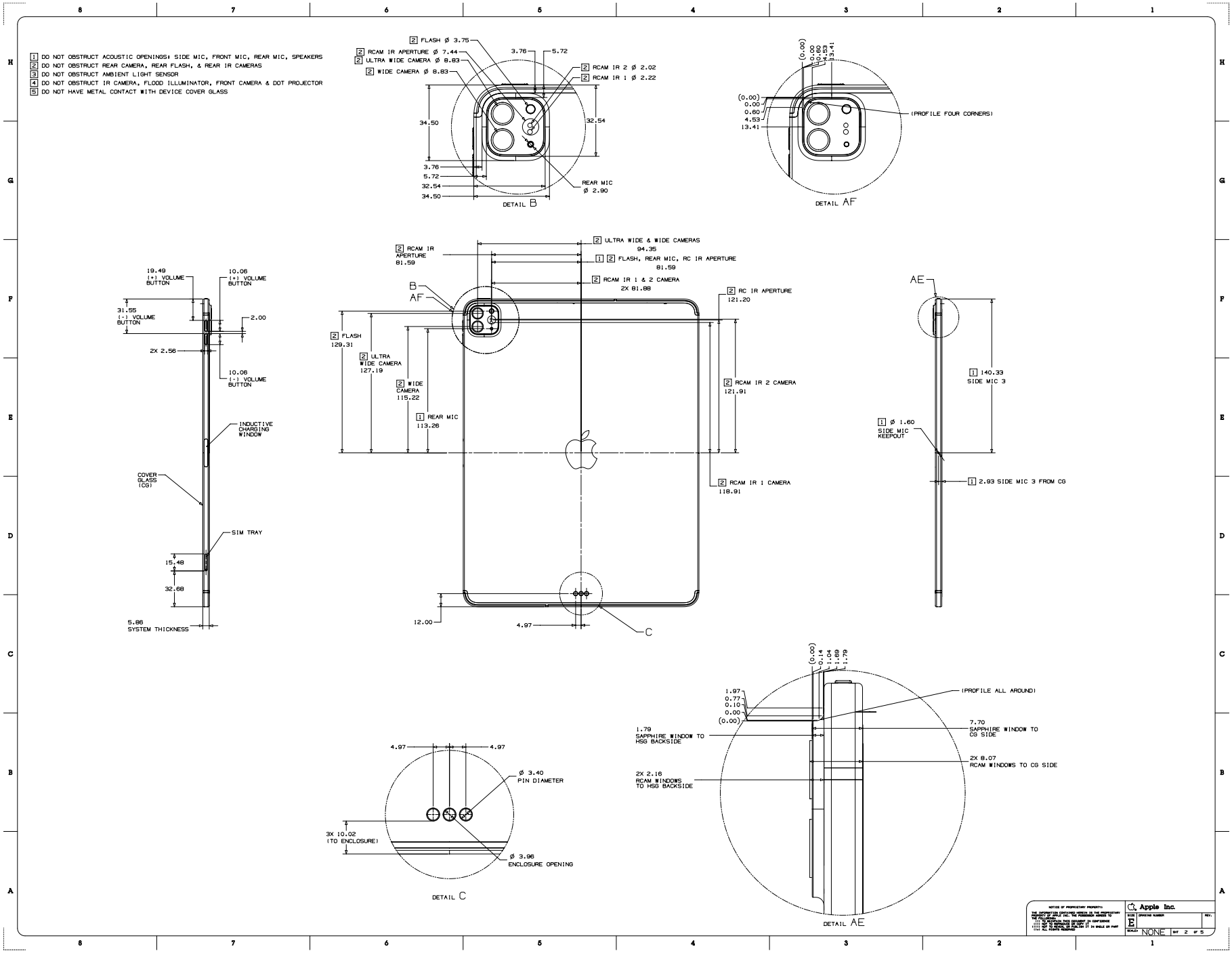
[1] DO NOT OBSTRUCT ACOUSTIC OPENINGS: SIDE MIC, FRONT MIC, REAR MIC, SPEAKERS
[2] DO NOT OBSTRUCT REAR CAMERA, REAR FLASH, & REAR IR CAMERAS
[3] DO NOT OBSTRUCT AMBIENT LIGHT SENSOR
[4] DO NOT OBSTRUCT IR CAMERA, FLOOD ILLUMINATOR, FRONT CAMERA & DOT PROJECTOR
[5] DO NOT HAVE METAL CONTACT WITH DEVICE COVER GLASS
[2] FLASH Ø 3.75
[2] RCAM IR APERTURE Ø 7.44
[2] ULTRA WIDE CAMERA Ø 8.83
[2] WIDE CAMERA Ø 8.83
[2] RCAM IR 2 Ø 2.02
[2] RCAM IR 1 Ø 2.22
REAR MIC Ø 2.90
DETAIL B
(PROFILE FOUR CORNERS)
DETAIL AF
19.49 (+) VOLUME BUTTON
10.06 (+) VOLUME BUTTON
31.55 (-) VOLUME BUTTON
2.00
2X 2.56
10.06 (-) VOLUME BUTTON
INDUCTIVE CHARGING WINDOW
COVER GLASS (CG)
SIM TRAY
15.48
32.68
5.86 SYSTEM THICKNESS
[2] RCAM IR APERTURE 81.59
[2] ULTRA WIDE & WIDE CAMERAS 94.35
[1] [2] FLASH, REAR MIC, RC IR APERTURE 81.59
[2] RCAM IR 1 & 2 CAMERA 2X 81.88
[2] RC IR APERTURE 121.20
[2] FLASH 129.31
[2] ULTRA WIDE CAMERA 127.19
[2] WIDE CAMERA 115.22
[1] REAR MIC 113.26
[2] RCAM IR 2 CAMERA 121.91
[2] RCAM IR 1 CAMERA 118.91
12.00
4.97
[1] 140.33 SIDE MIC 3
[1] Ø 1.60 SIDE MIC KEEPOUT
[1] 2.93 SIDE MIC 3 FROM CG
4.97
4.97
Ø 3.40 PIN DIAMETER
3X 10.02 (TO ENCLOSURE)
Ø 3.96 ENCLOSURE OPENING
DETAIL C
(PROFILE ALL AROUND)
1.79 SAPPHIRE WINDOW TO HSG BACKSIDE
7.70 SAPPHIRE WINDOW TO CG SIDE
2X 8.07 RCAM WINDOWS TO CG SIDE
2X 2.16 RCAM WINDOWS TO HSG BACKSIDE
DETAIL AE
Apple Inc.
NONE

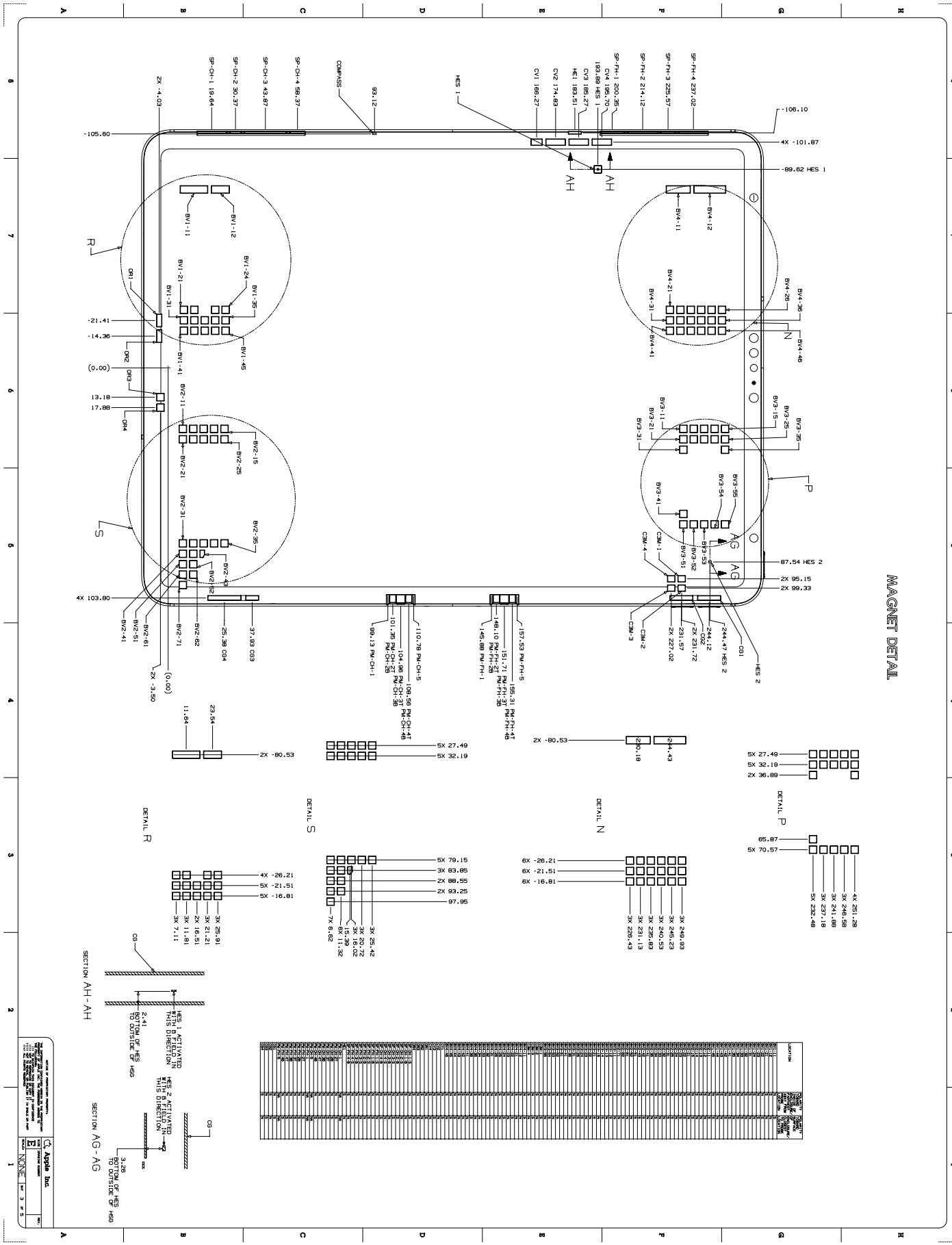
MAGNET DETAIL
DETAIL R
DETAIL S
DETAIL N
DETAIL P
SECTION AH - AH
SECTION AG - AG
HES 1 ACTIVATED THIS DIRECTION
HES 2 ACTIVATED THIS DIRECTION
2.41 BOTTOM OF HES TO OUTSIDE OF HSG
3.28 BOTTOM OF HES TO OUTSIDE OF HSG
Apple Inc.
NONE

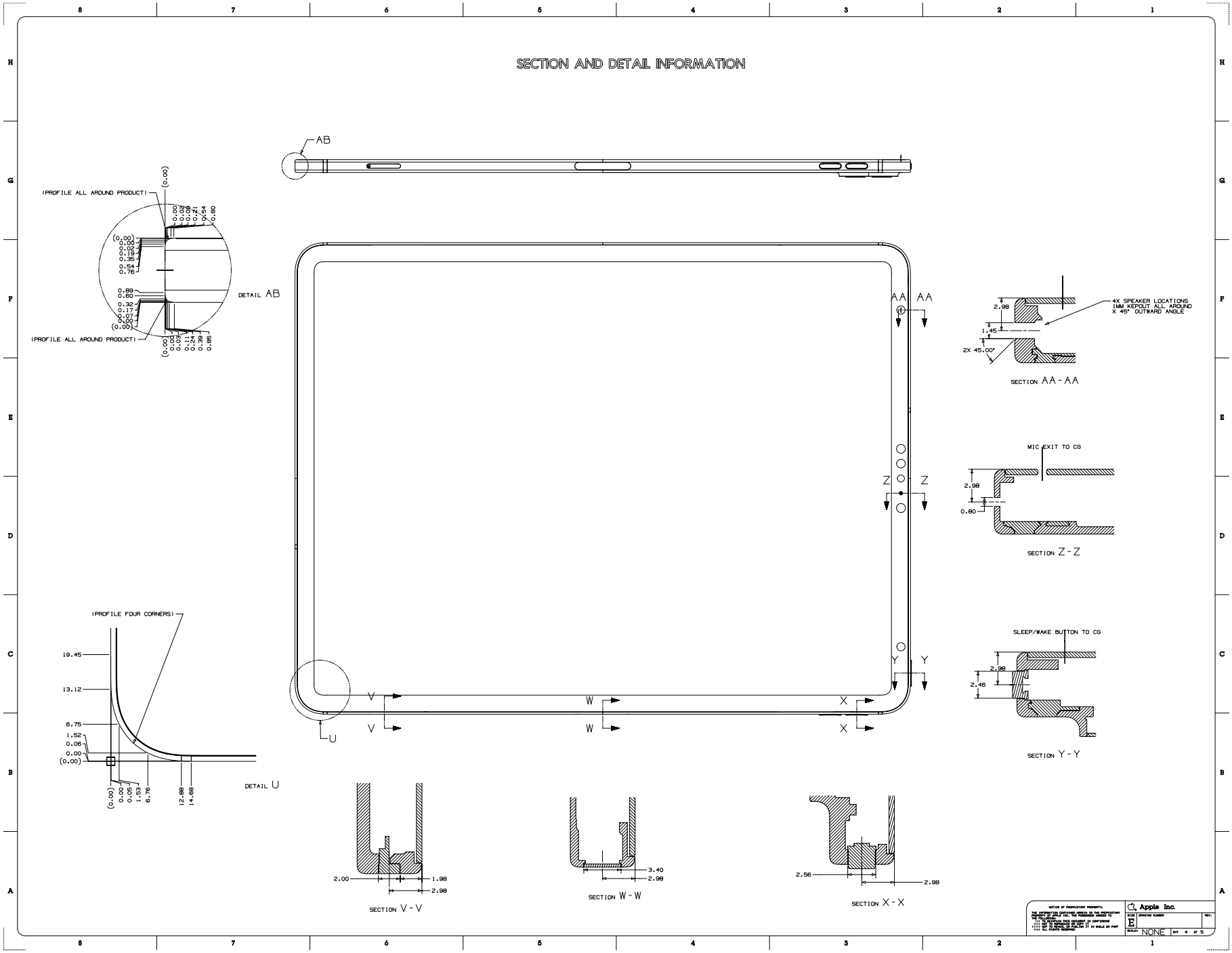
SECTION AND DETAIL INFORMATION
AB
DETAIL AB
(PROFILE ALL AROUND PRODUCT)
AA
Z
Y
V
W
X
U
4X SPEAKER LOCATIONS
1MM KEPOUT ALL AROUND
X 45° OUTWARD ANGLE
2X 45.00°
SECTION AA - AA
MIC EXIT TO CG
SECTION Z - Z
SLEEP/WAKE BUTTON TO CG
SECTION Y - Y
(PROFILE FOUR CORNERS)
DETAIL U
SECTION V - V
SECTION W - W
SECTION X - X
Apple Inc.
NONE

56.105 12.9 英寸 iPad Pro（第 4 代）5/5

[英语]

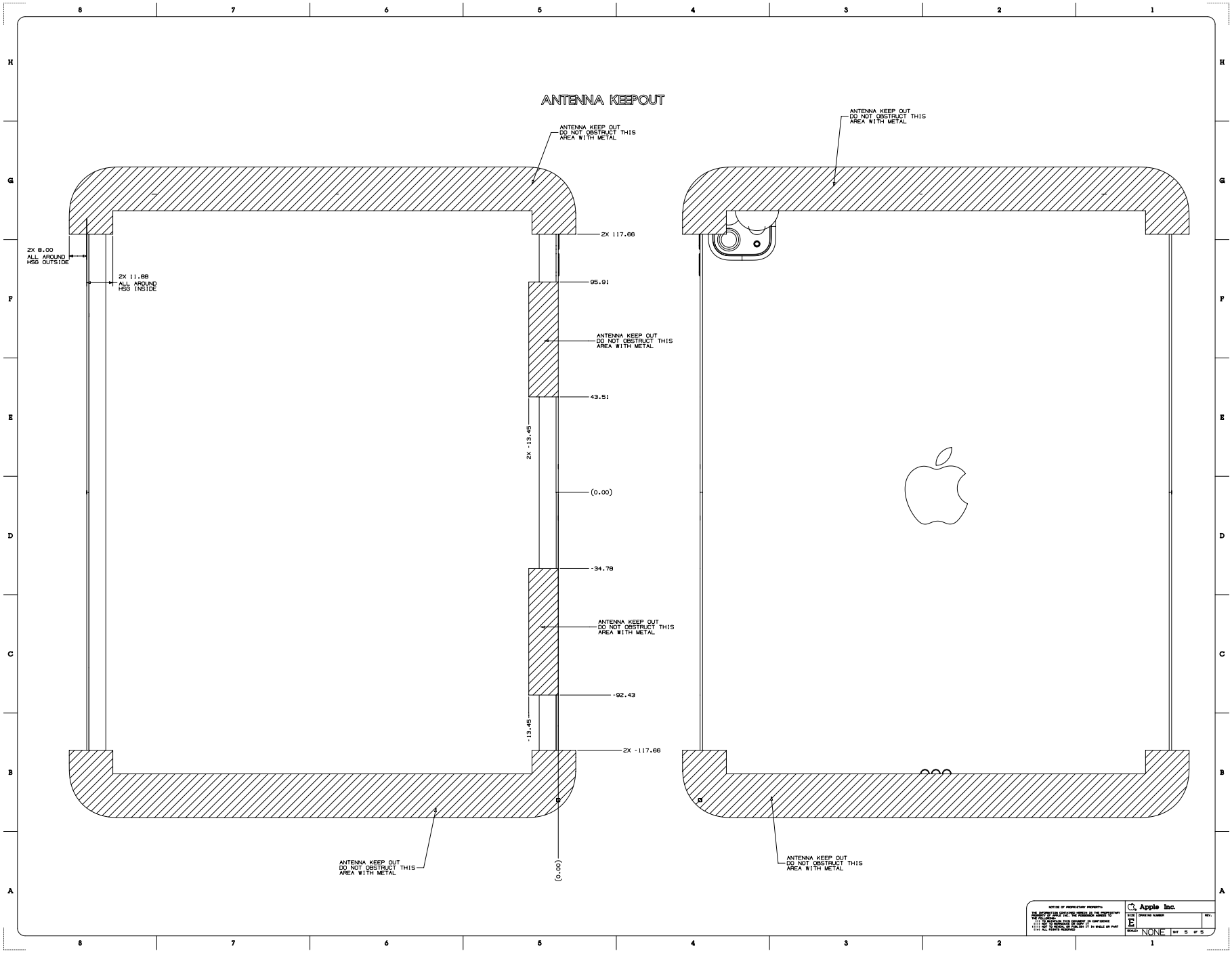

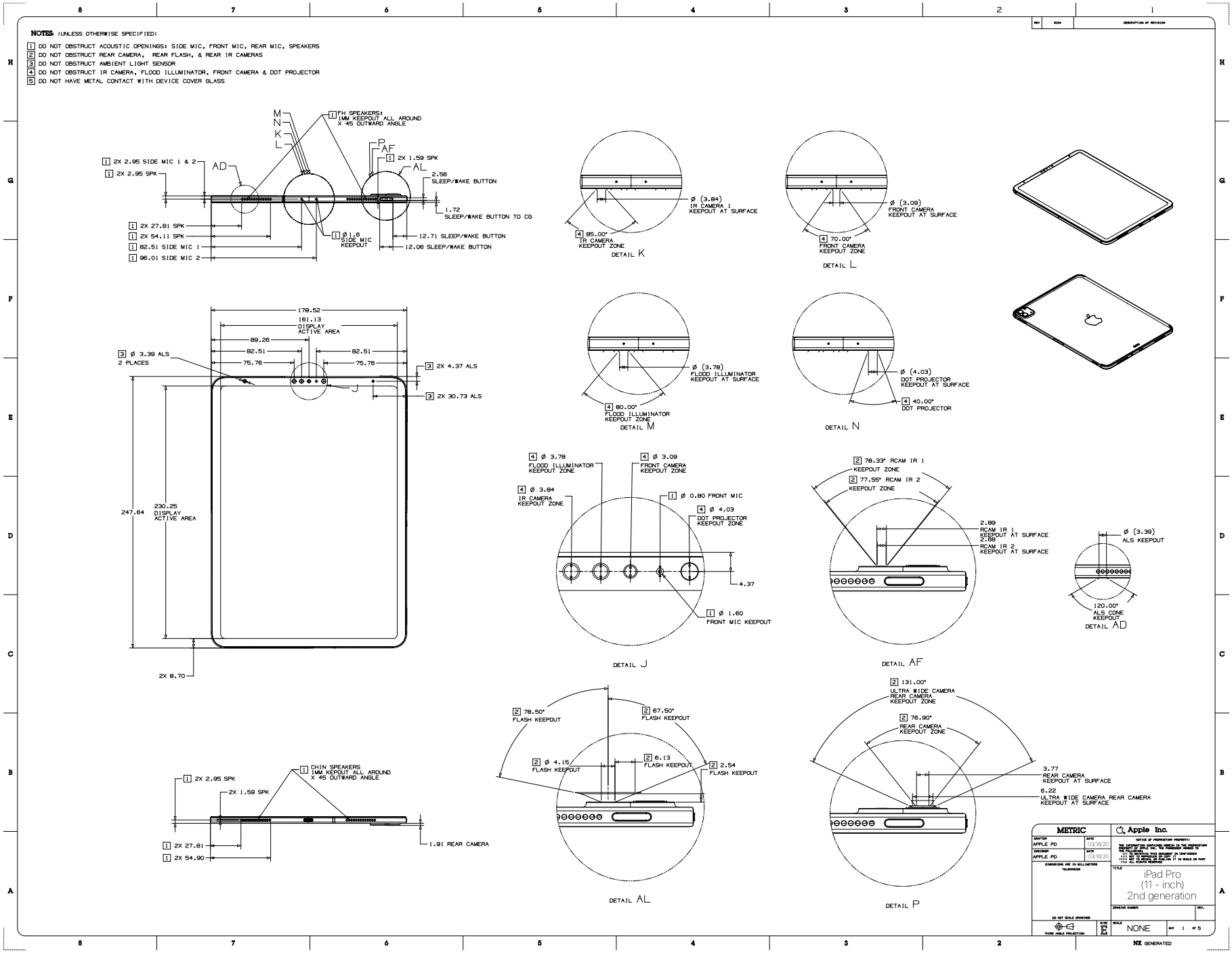
NOTES: (UNLESS OTHERWISE SPECIFIED)
1 DO NOT OBSTRUCT ACOUSTIC OPENINGS: SIDE MIC, FRONT MIC, REAR MIC, SPEAKERS
2 DO NOT OBSTRUCT REAR CAMERA, REAR FLASH, & REAR IR CAMERAS
3 DO NOT OBSTRUCT AMBIENT LIGHT SENSOR
4 DO NOT OBSTRUCT IR CAMERA, FLOOD ILLUMINATOR, FRONT CAMERA & DOT PROJECTOR
5 DO NOT HAVE METAL CONTACT WITH DEVICE COVER GLASS
1 FH SPEAKERS: 1MM KEEPOUT ALL AROUND X 45 OUTWARD ANGLE
1 2X 2.95 SIDE MIC 1 & 2
1 2X 2.95 SPK
1 2X 1.59 SPK
2.56 SLEEP/WAKE BUTTON
1.72 SLEEP/WAKE BUTTON TO CG
1 2X 27.81 SPK
1 2X 54.11 SPK
1 82.51 SIDE MIC 1
1 98.01 SIDE MIC 2
1 Ø 1.6 SIDE MIC KEEPOUT
12.71 SLEEP/WAKE BUTTON
12.06 SLEEP/WAKE BUTTON
DETAIL K
Ø (3.09) FRONT CAMERA KEEPOUT AT SURFACE
4 70.00° FRONT CAMERA KEEPOUT ZONE
DETAIL L
178.52
161.13 DISPLAY ACTIVE AREA
89.26
82.51
82.51
75.76
75.76
3 Ø 3.39 ALS 2 PLACES
3 2X 4.37 ALS
3 2X 30.73 ALS
247.64
230.25 DISPLAY ACTIVE AREA
2X 8.70
Ø (3.78) FLOOD ILLUMINATOR KEEPOUT AT SURFACE
4 80.00° FLOOD ILLUMINATOR KEEPOUT ZONE
DETAIL M
Ø (4.03) DOT PROJECTOR KEEPOUT AT SURFACE
4 40.00° DOT PROJECTOR
DETAIL N
4 Ø 3.78 FLOOD ILLUMINATOR KEEPOUT ZONE
4 Ø 3.09 FRONT CAMERA KEEPOUT ZONE
4 Ø 3.84 IR CAMERA KEEPOUT ZONE
1 Ø 0.80 FRONT MIC
4 Ø 4.03 DOT PROJECTOR KEEPOUT ZONE
4.37
1 Ø 1.60 FRONT MIC KEEPOUT
DETAIL J
2 78.33° RCAM IR 1 KEEPOUT ZONE
2 77.55° RCAM IR 2 KEEPOUT ZONE
2.89 RCAM IR 1 KEEPOUT AT SURFACE
2.89 RCAM IR 2 KEEPOUT AT SURFACE
DETAIL AF
Ø (3.39) ALS KEEPOUT
120.00° ALS CONE KEEPOUT
DETAIL AD
1 CHIN SPEAKERS 1MM KEPOUT ALL AROUND X 45 OUTWARD ANGLE
1 2X 2.95 SPK
2X 1.59 SPK
1 2X 27.81
1 2X 54.90
1.91 REAR CAMERA
2 78.50° FLASH KEEPOUT
2 67.50° FLASH KEEPOUT
2 Ø 4.15 FLASH KEEPOUT
2 6.13 FLASH KEEPOUT
2 2.54 FLASH KEEPOUT
DETAIL AL
2 131.00° ULTRA WIDE CAMERA REAR CAMERA KEEPOUT ZONE
2 76.90° REAR CAMERA KEEPOUT ZONE
3.77 REAR CAMERA KEEPOUT AT SURFACE
6.22 ULTRA WIDE CAMERA REAR CAMERA KEEPOUT AT SURFACE
DETAIL P
METRIC
Apple Inc.
APPLE PD 03/19/20
APPLE PD 03/19/20
iPad Pro (11 - inch) 2nd generation
NONE
NX GENERATED

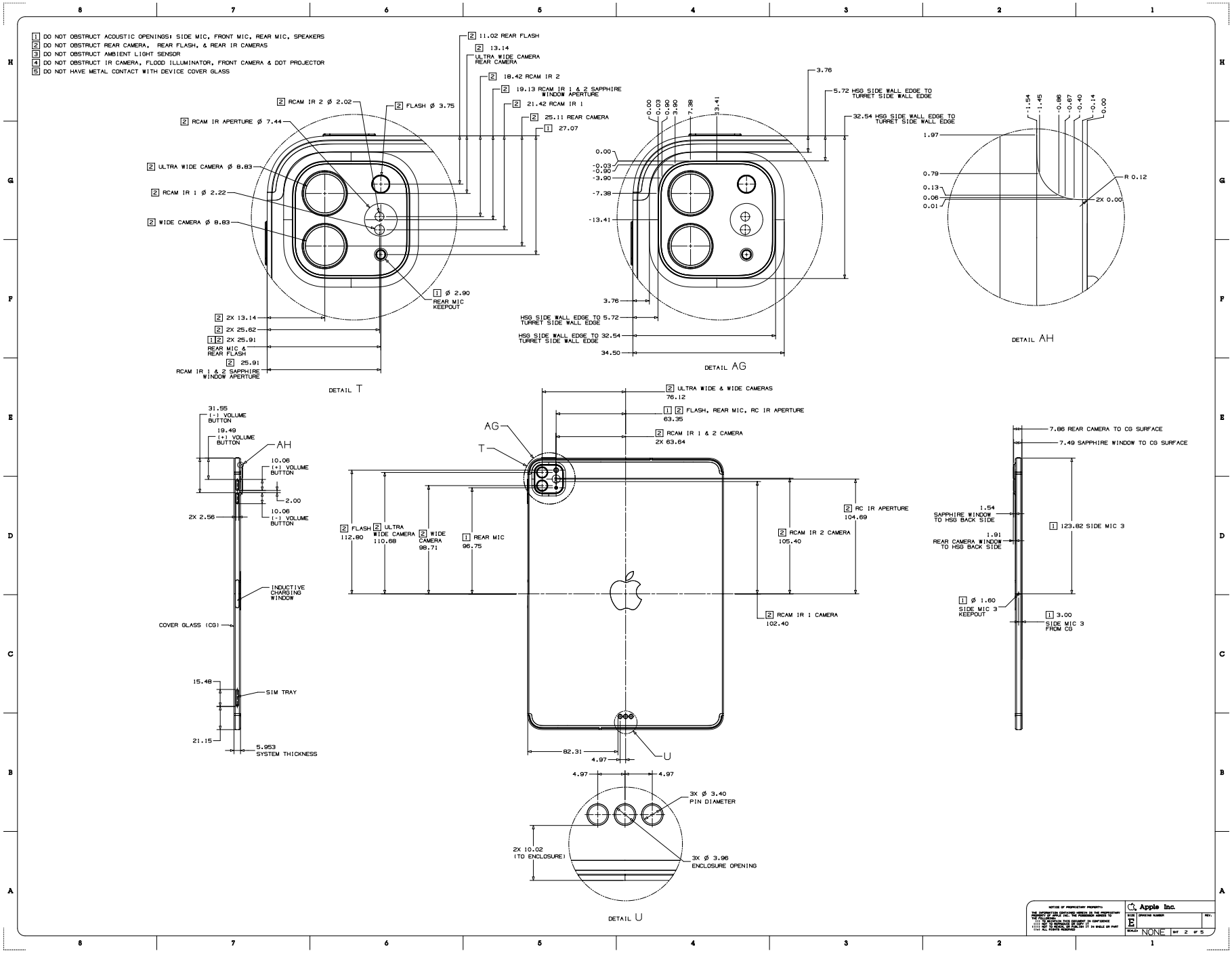
1 DO NOT OBSTRUCT ACOUSTIC OPENINGS: SIDE MIC, FRONT MIC, REAR MIC, SPEAKERS
2 DO NOT OBSTRUCT REAR CAMERA, REAR FLASH, & REAR IR CAMERAS
3 DO NOT OBSTRUCT AMBIENT LIGHT SENSOR
4 DO NOT OBSTRUCT IR CAMERA, FLOOD ILLUMINATOR, FRONT CAMERA & DOT PROJECTOR
5 DO NOT HAVE METAL CONTACT WITH DEVICE COVER GLASS
DETAIL T
DETAIL AG
DETAIL AH
DETAIL U
Apple Inc.

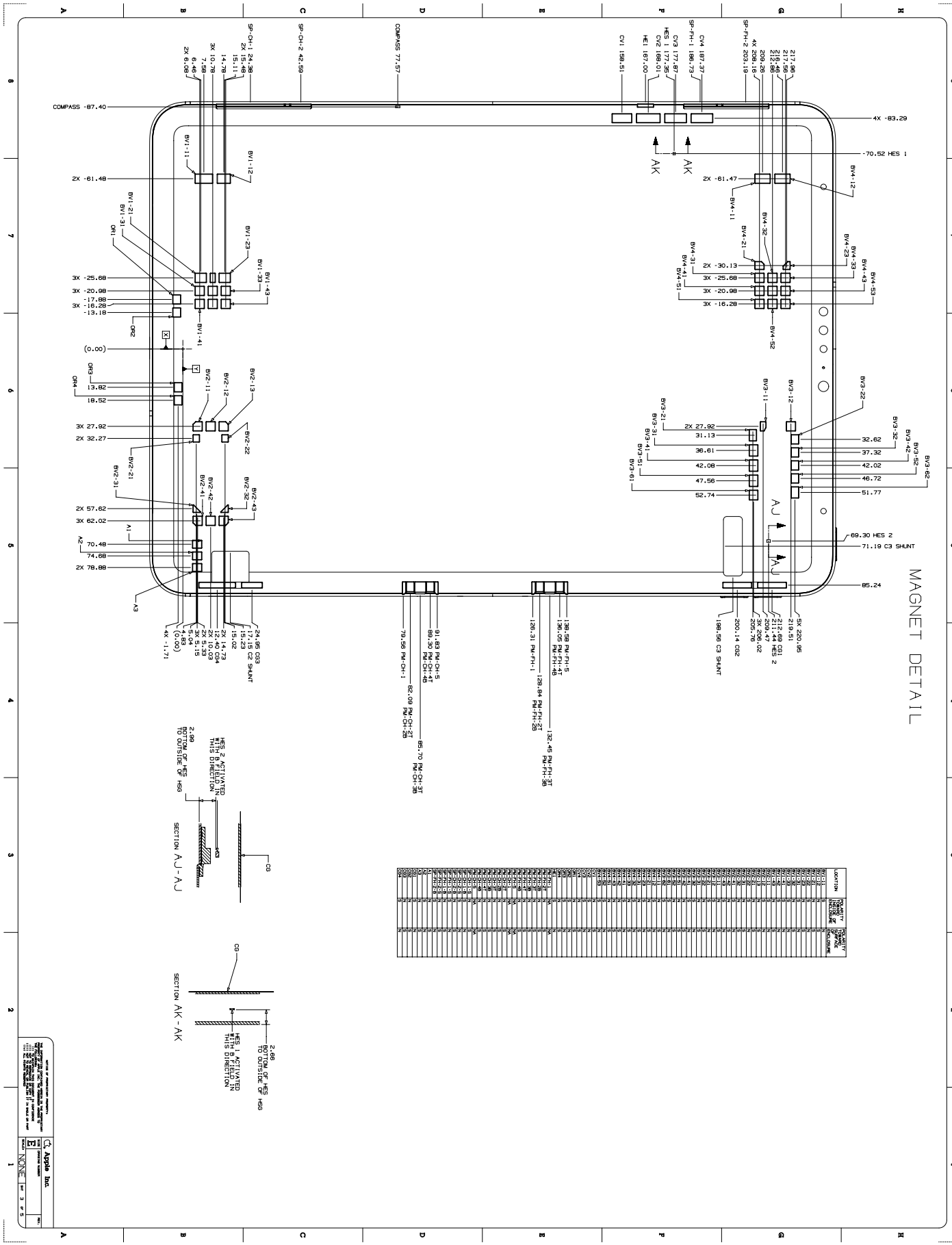
MAGNET DETAIL
SECTION AJ - AJ
SECTION AK - AK
HES 2 ACTIVATED WITH B FIELD IN THIS DIRECTION
2.99 BOTTOM OF HES TO OUTSIDE OF HSG
HES 1 ACTIVATED WITH B FIELD IN THIS DIRECTION
2.88 BOTTOM OF HES TO OUTSIDE OF HSG
Apple Inc.
NONE

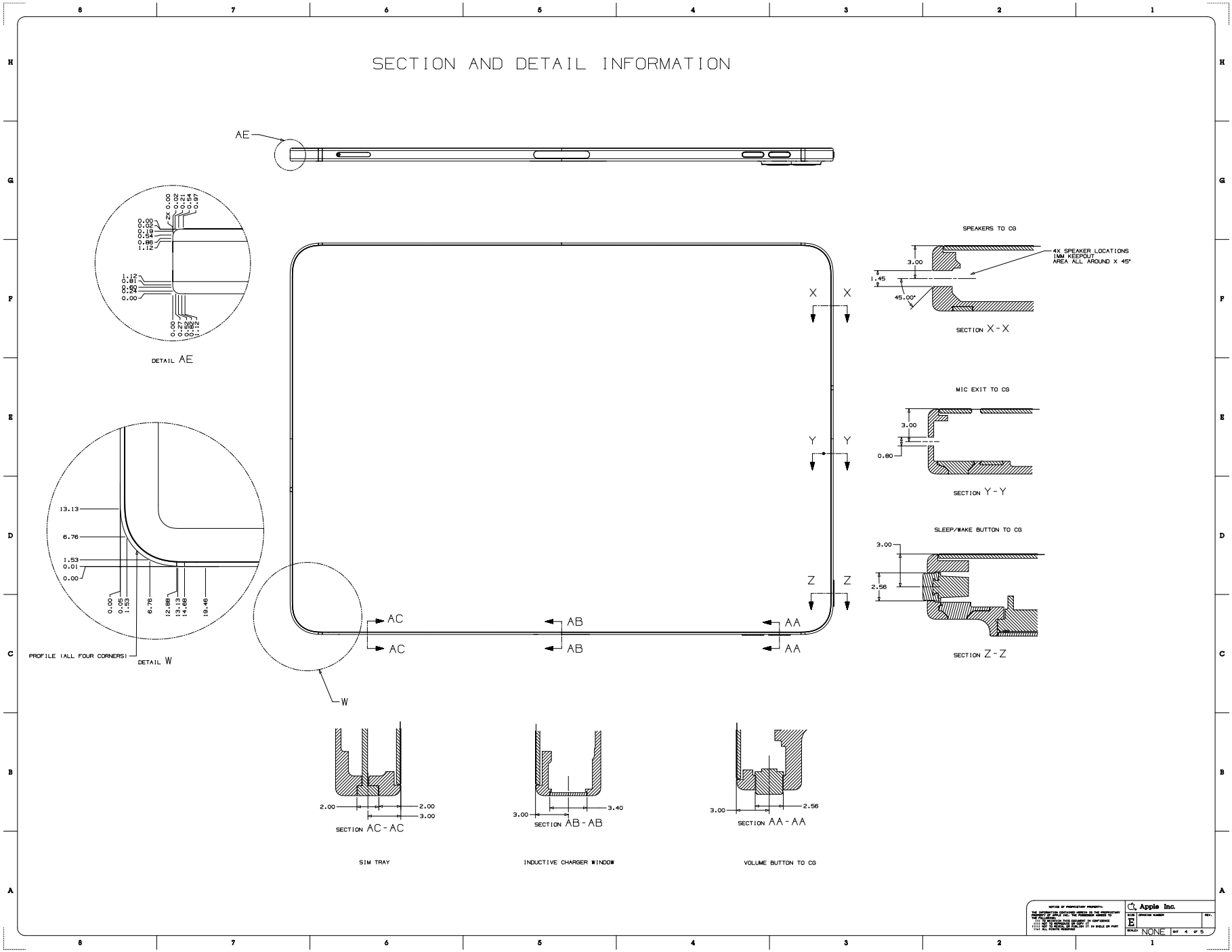
SECTION AND DETAIL INFORMATION
AE
DETAIL AE
W
DETAIL W
PROFILE (ALL FOUR CORNERS)
X X
Y Y
Z Z
AC AC
AB AB
AA AA
SPEAKERS TO CG
4X SPEAKER LOCATIONS 1MM KEEPOUT AREA ALL AROUND X 45°
SECTION X-X
MIC EXIT TO CG
SECTION Y-Y
SLEEP/WAKE BUTTON TO CG
SECTION Z-Z
SECTION AC-AC
SECTION AB-AB
SECTION AA-AA
SIM TRAY
INDUCTIVE CHARGER WINDOW
VOLUME BUTTON TO CG
Apple Inc.

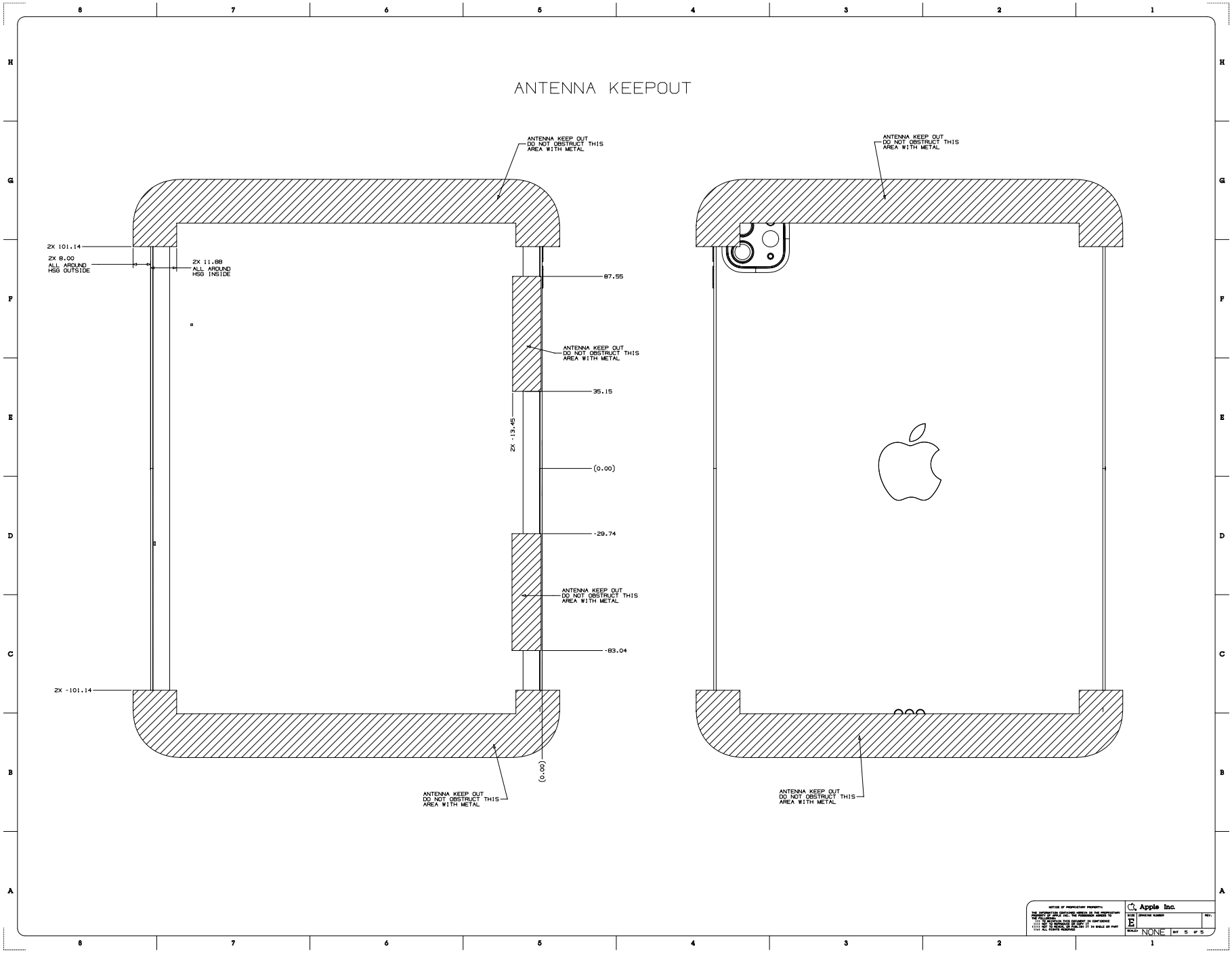
ANTENNA KEEPOUT
ANTENNA KEEP OUT
DO NOT OBSTRUCT THIS
AREA WITH METAL
2X 101.14
2X 8.00
ALL AROUND
HSG OUTSIDE
2X 11.88
ALL AROUND
HSG INSIDE
87.55
35.15
2X -13.45
(0.00)
-29.74
-83.04
2X -101.14
(0.00)
Apple Inc.
NONE

56.111 iPad Air（第 3 代）无线局域网机型 1/3

[英语]

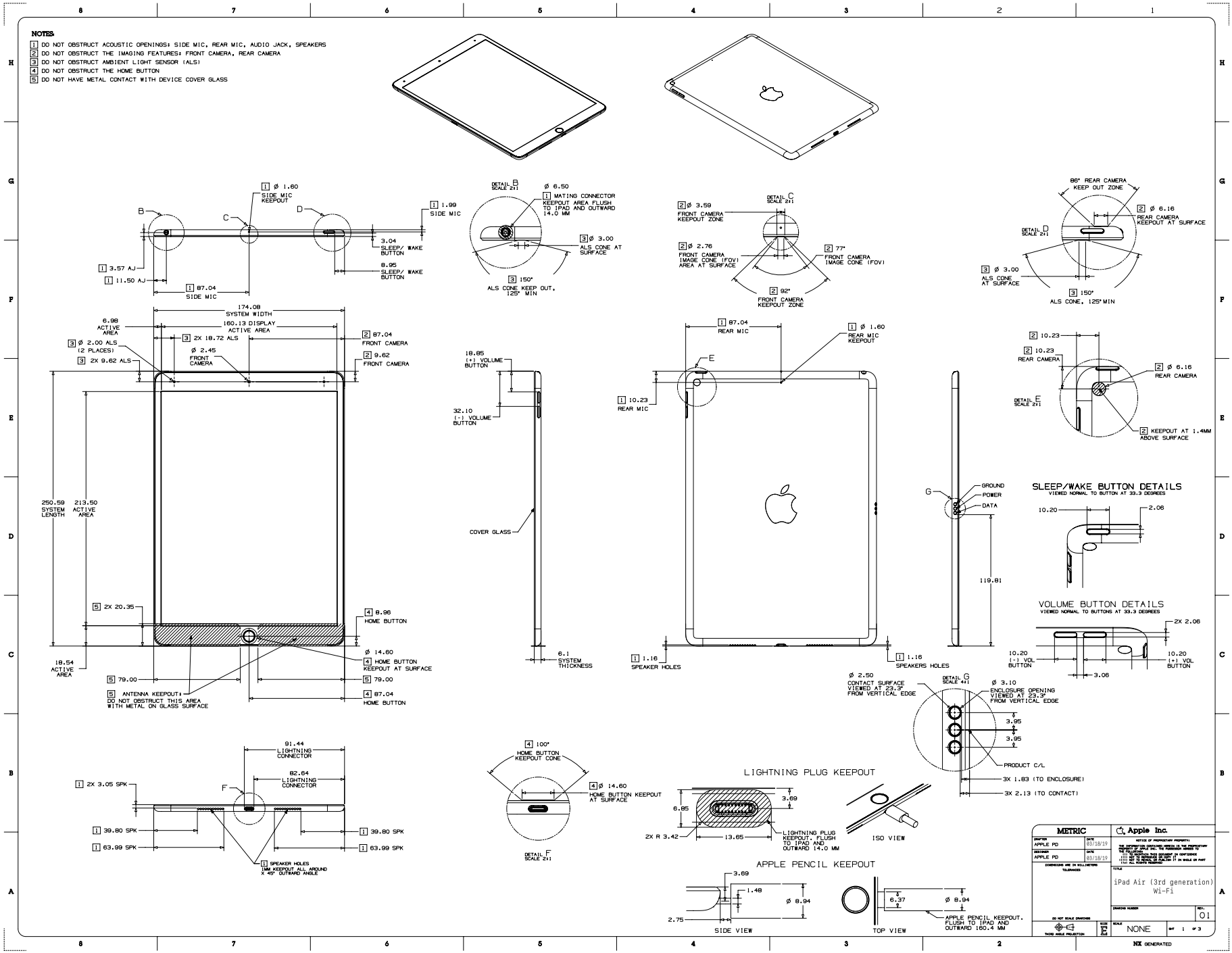

版权所有 © 2023 Apple Inc. 保留所有权利。

56.112 iPad Air（第 3 代）无线局域网机型 2/3

[英语]

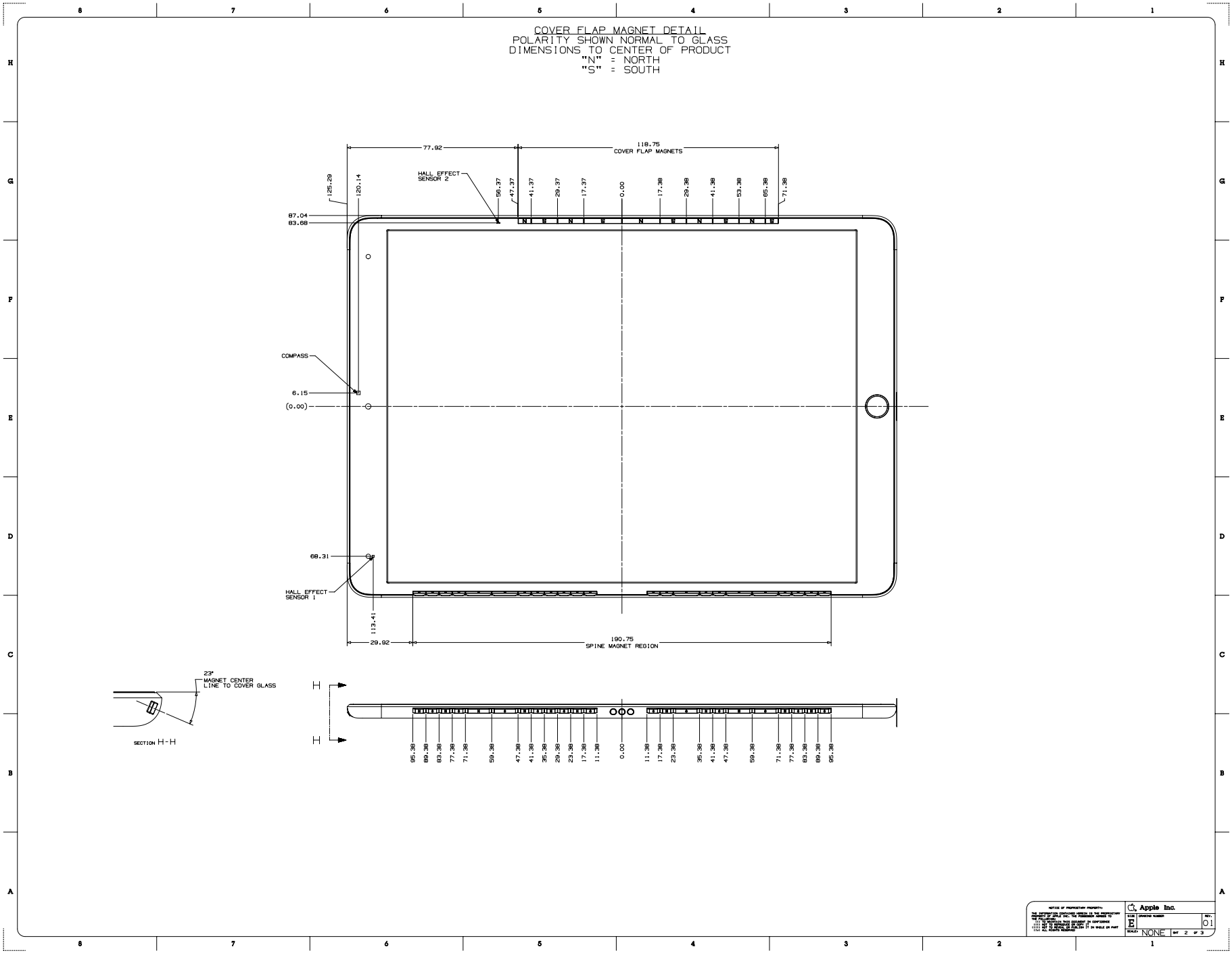

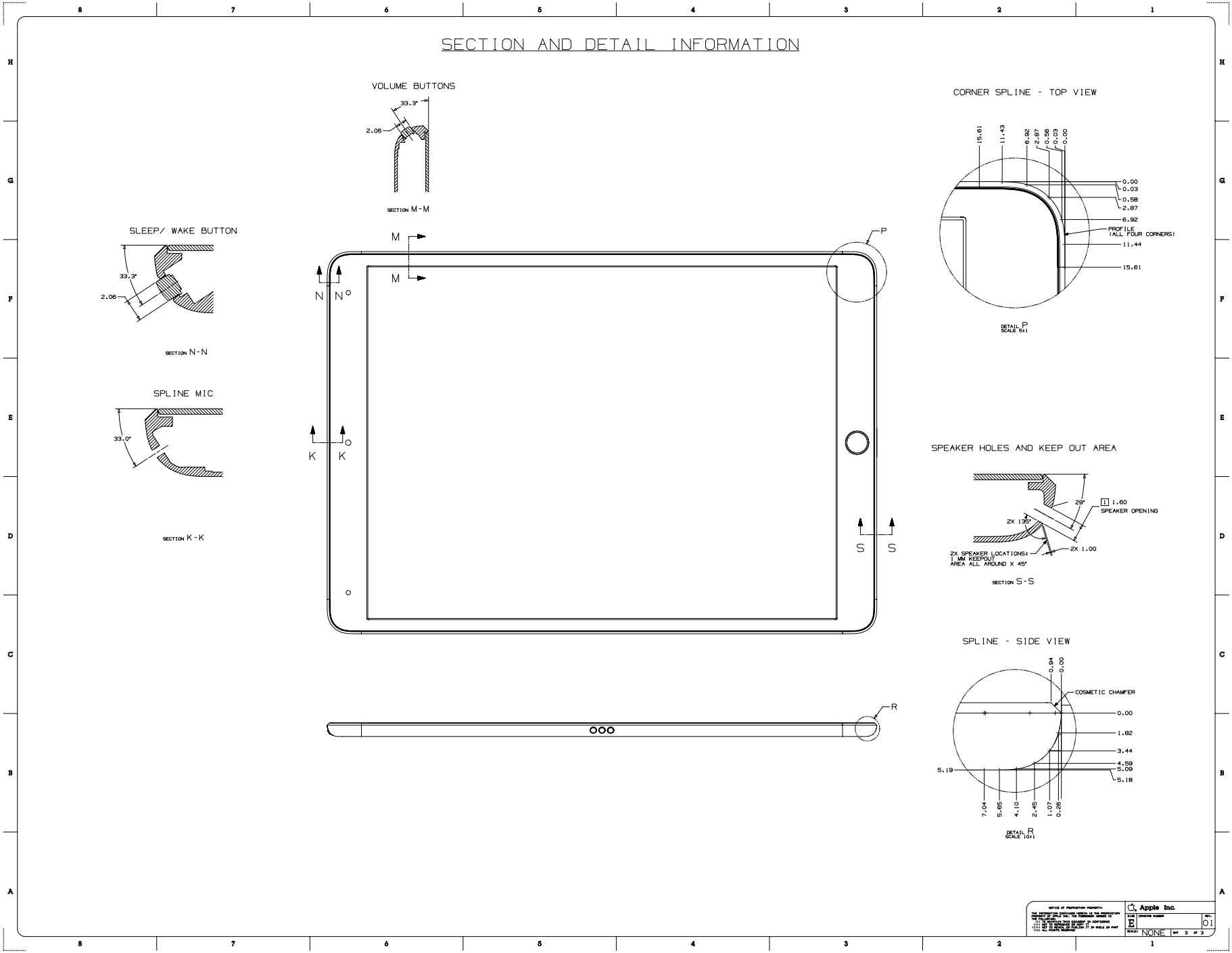
SECTION AND DETAIL INFORMATION
VOLUME BUTTONS
33.3°
2.06
SECTION M-M
SLEEP/ WAKE BUTTON
33.3°
2.06
SECTION N-N
SPLINE MIC
33.0°
SECTION K-K
M
M
N
N°
K
K°
P
S
S
R
CORNER SPLINE - TOP VIEW
15.61
11.43
6.92
2.87
0.58
0.03
0.00
PROFILE (ALL FOUR CORNERS)
DETAIL P SCALE 5:1
SPEAKER HOLES AND KEEP OUT AREA
29°
1.60
SPEAKER OPENING
2X 135°
2X 1.00
2X SPEAKER LOCATIONS: 1 MM KEEPOUT AREA ALL AROUND X 45°
SECTION S-S
SPLINE - SIDE VIEW
0.94
0.00
COSMETIC CHAMFER
1.82
3.44
4.59
5.09
5.18
5.19
7.04
5.85
4.10
2.45
1.07
0.28
DETAIL R SCALE 10:1
Apple Inc.
NONE

56.114 iPad Air（第 3 代）无线局域网 + 蜂窝网络机型 1/3

[英语]

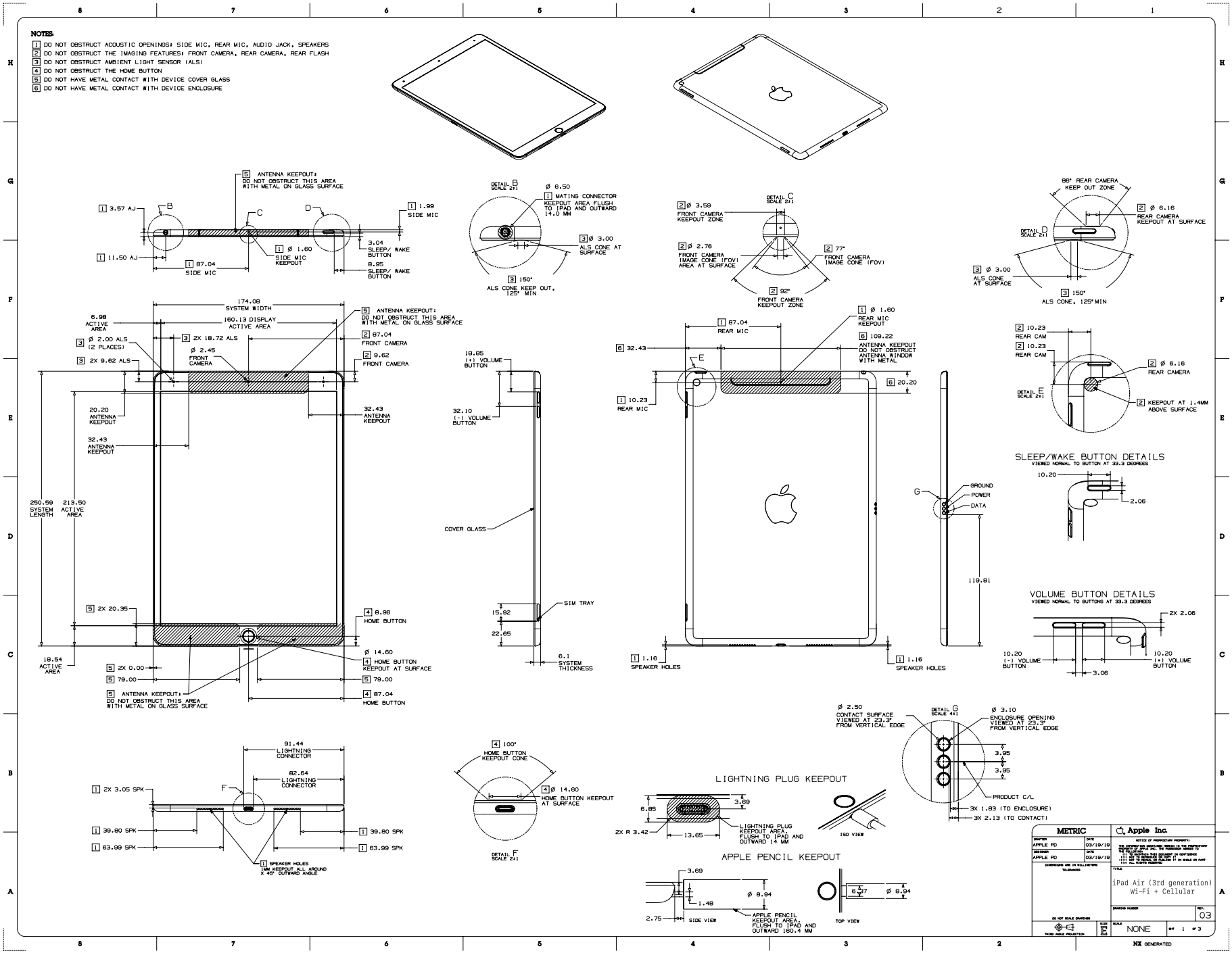

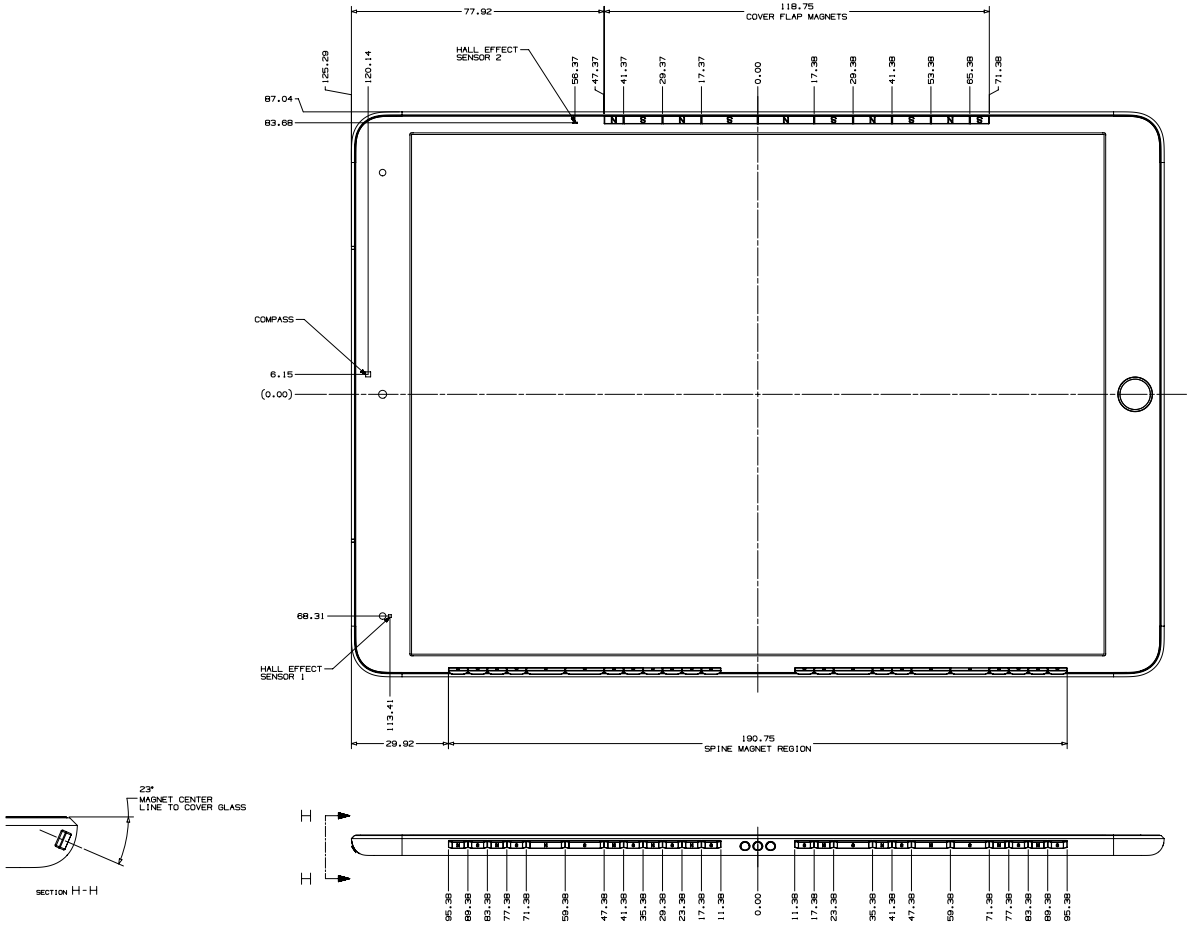
COVER FLAP MAGNET DETAIL
POLARITY SHOWN NORMAL TO GLASS
DIMENSIONS TO CENTER OF PRODUCT
"N" = NORTH
"S" = SOUTH
77.92
118.75
COVER FLAP MAGNETS
HALL EFFECT SENSOR 2
125.29
120.14
87.04
83.68
56.37
47.37
41.37
29.37
17.37
0.00
17.38
29.38
41.38
53.38
65.38
71.38
COMPASS
6.15
(0.00)
68.31
HALL EFFECT SENSOR 1
113.41
29.92
190.75
SPINE MAGNET REGION
23°
MAGNET CENTER LINE TO COVER GLASS
SECTION H-H
H
H
95.38
89.38
83.38
77.38
71.38
59.38
47.38
41.38
35.38
29.38
23.38
17.38
11.38
0.00
11.38
17.38
23.38
35.38
41.38
47.38
59.38
71.38
77.38
83.38
89.38
95.38
Apple Inc.
NONE
03

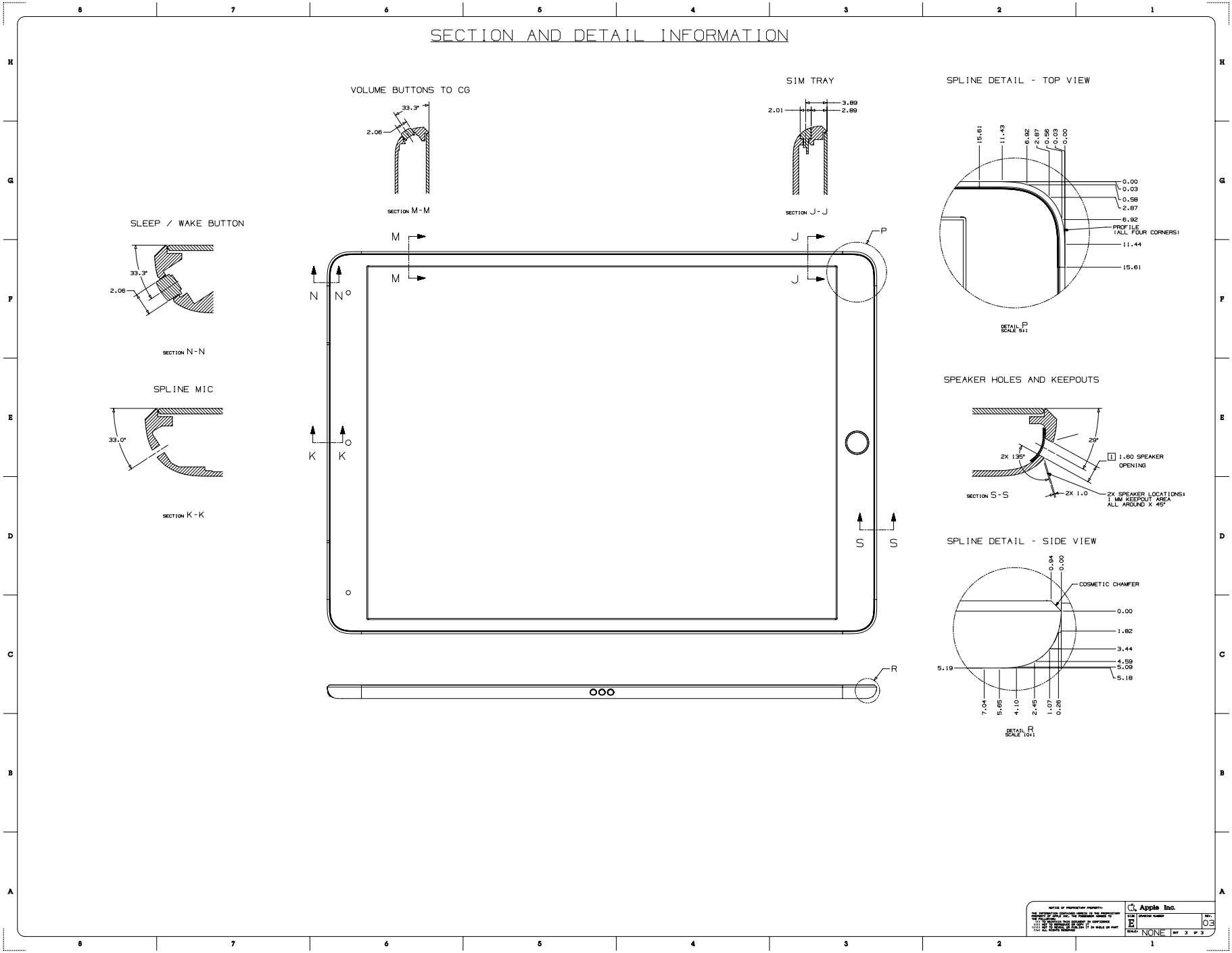
SECTION AND DETAIL INFORMATION
VOLUME BUTTONS TO CG
33.3°
2.06
SECTION M-M
SIM TRAY
3.89
2.89
2.01
SECTION J-J
SPLINE DETAIL - TOP VIEW
15.61
11.43
6.92
2.87
0.58
0.03
0.00
PROFILE (ALL FOUR CORNERS)
11.44
DETAIL P SCALE 5:1
SLEEP / WAKE BUTTON
33.3°
2.06
SECTION N-N
SPLINE MIC
33.0°
SECTION K-K
M
N
K
J
P
S
R
SPEAKER HOLES AND KEEPOUTS
29°
2X 135°
1.60 SPEAKER OPENING
2X 1.0
2X SPEAKER LOCATIONS: 1 MM KEEPOUT AREA ALL AROUND X 45°
SECTION S-S
SPLINE DETAIL - SIDE VIEW
0.94
0.00
COSMETIC CHAMFER
1.82
3.44
4.59
5.09
5.18
5.19
7.04
5.65
4.10
2.45
1.07
0.26
DETAIL R SCALE 10:1
Apple Inc.
SIZE E
REV. 03
SCALE NONE
SHT 3 OF 3

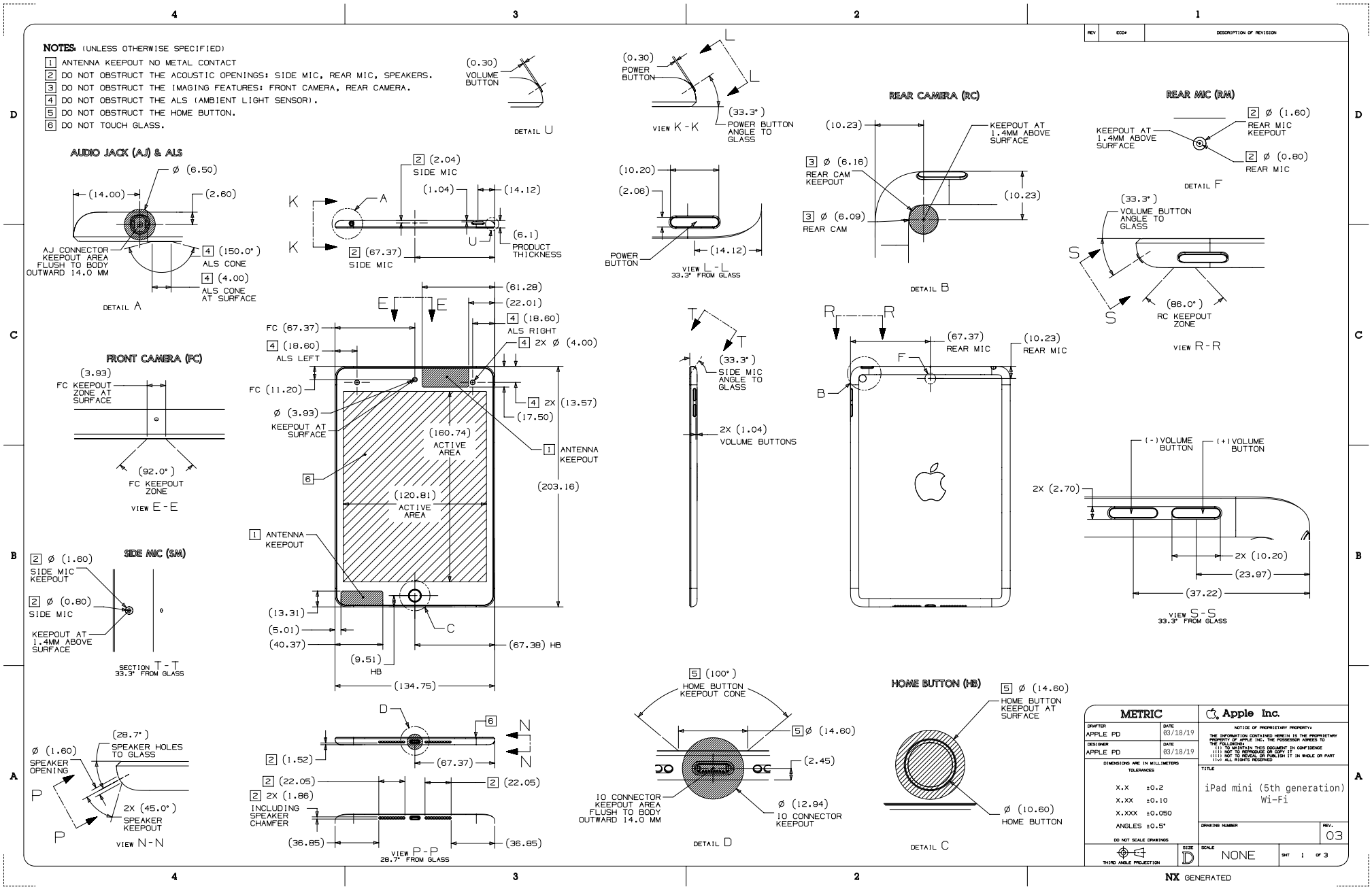
NOTES: (UNLESS OTHERWISE SPECIFIED)
1 ANTENNA KEEPOUT NO METAL CONTACT
2 DO NOT OBSTRUCT THE ACOUSTIC OPENINGS: SIDE MIC, REAR MIC, SPEAKERS.
3 DO NOT OBSTRUCT THE IMAGING FEATURES: FRONT CAMERA, REAR CAMERA.
4 DO NOT OBSTRUCT THE ALS (AMBIENT LIGHT SENSOR).
5 DO NOT OBSTRUCT THE HOME BUTTON.
6 DO NOT TOUCH GLASS.
AUDIO JACK (AJ) & ALS
DETAIL A
DETAIL U
VIEW K-K
VIEW L-L
REAR CAMERA (RC)
DETAIL B
REAR MIC (RM)
DETAIL F
VIEW R-R
FRONT CAMERA (FC)
VIEW E-E
SIDE MIC (SM)
SECTION T-T
VIEW S-S
VIEW N-N
VIEW P-P
DETAIL D
HOME BUTTON (HB)
DETAIL C
METRIC
Apple Inc.
iPad mini (5th generation)
Wi-Fi
NX GENERATED

56.118 iPad mini（第 5 代）无线局域网机型 2/3

[英语]

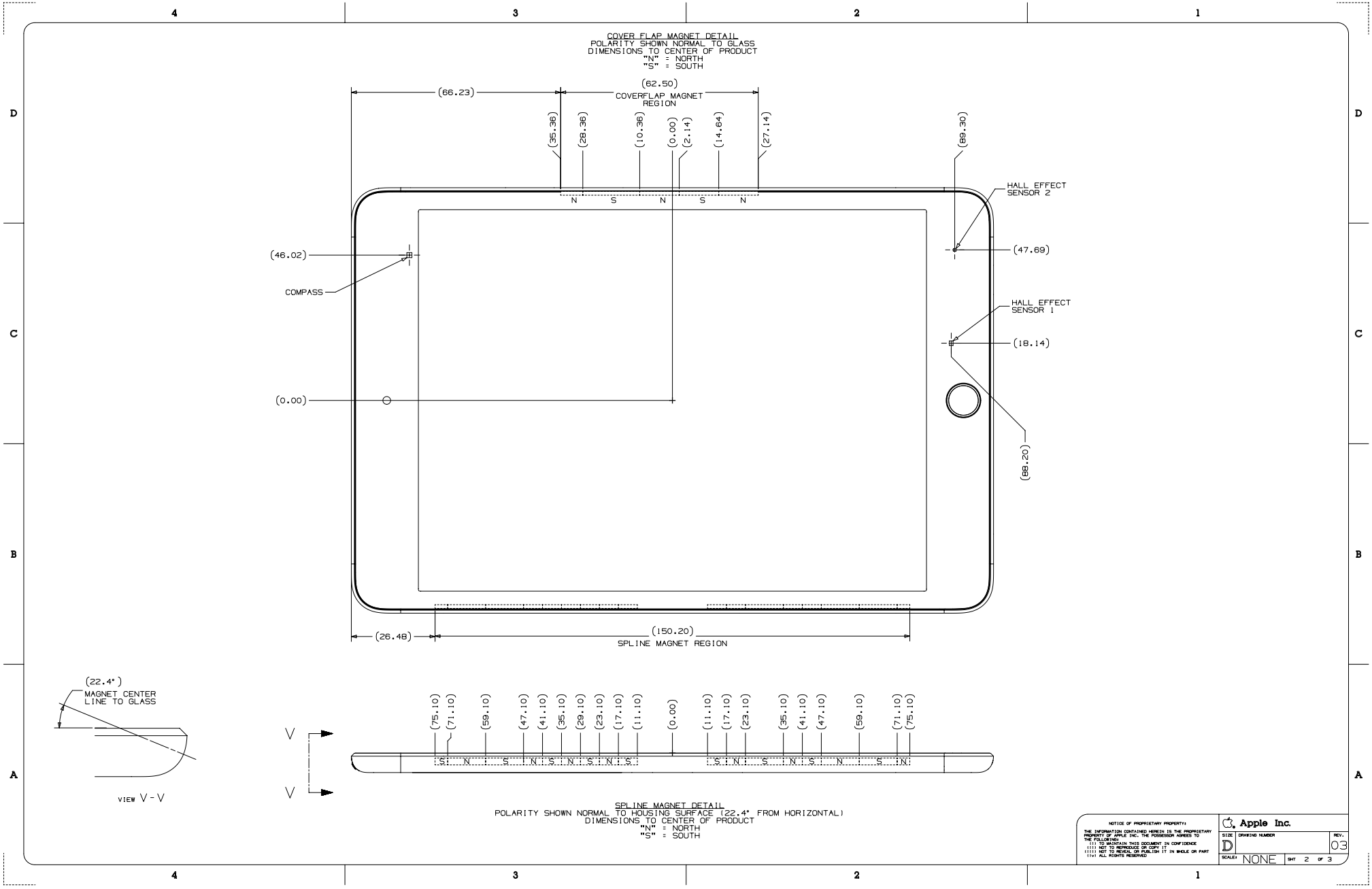

56.119 iPad mini（第 5 代）无线局域网机型 3/3

[英语]

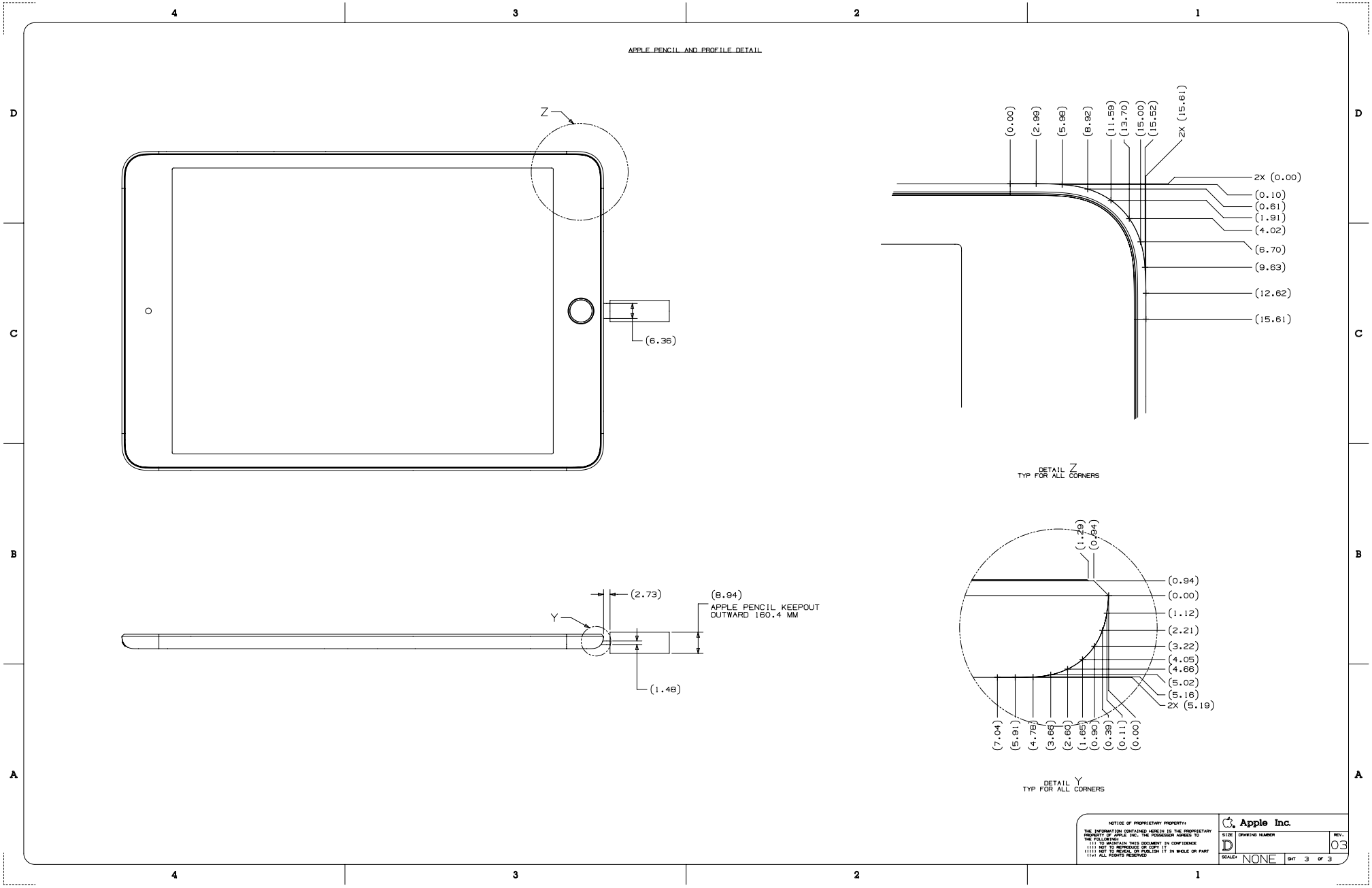

56.120 iPad mini（第 5 代）无线局域网 + 蜂窝网络机型 1/3

[英语]

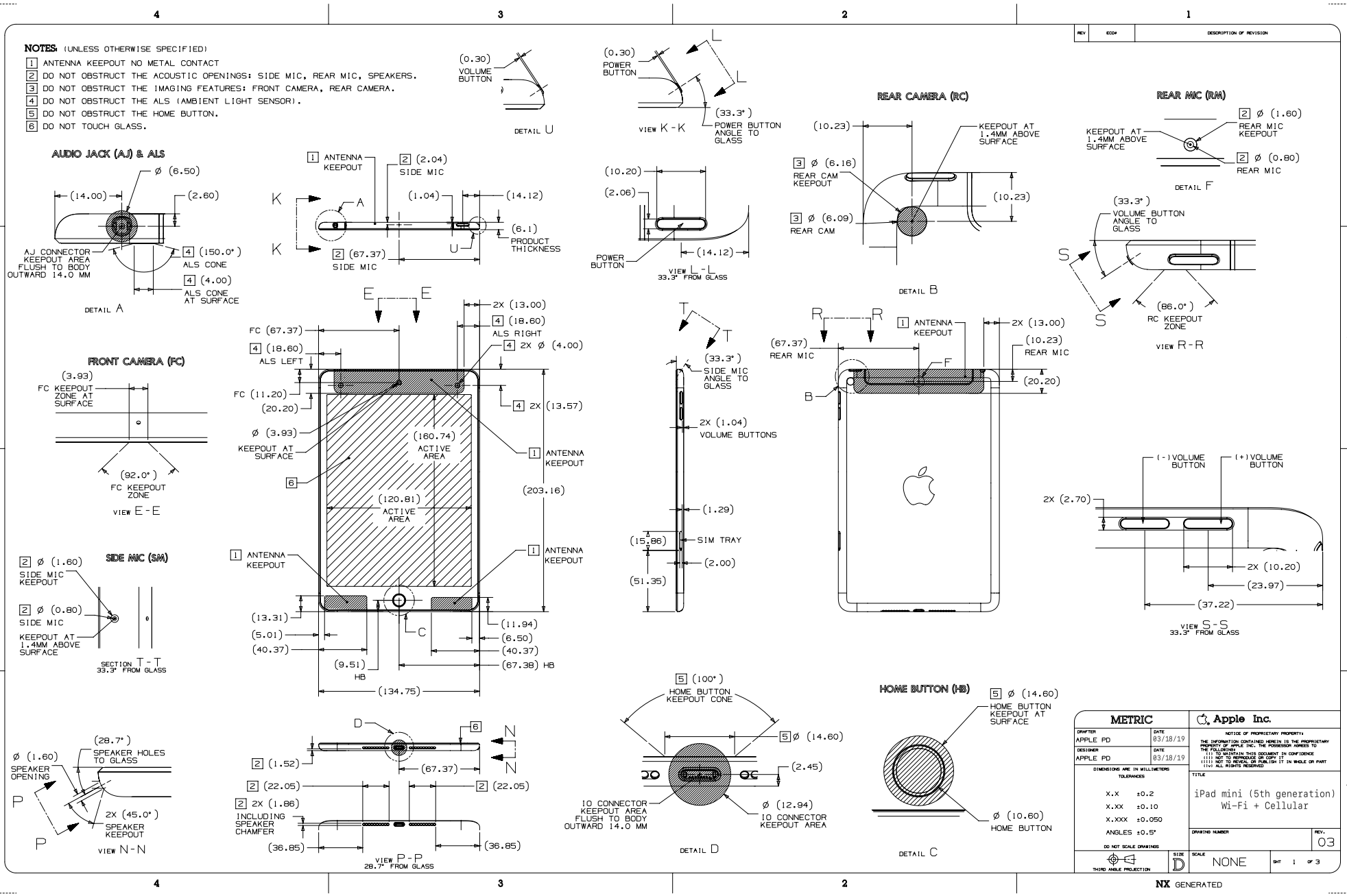

56.121 iPad mini（第 5 代）无线局域网 + 蜂窝网络机型 2/3

[英语]

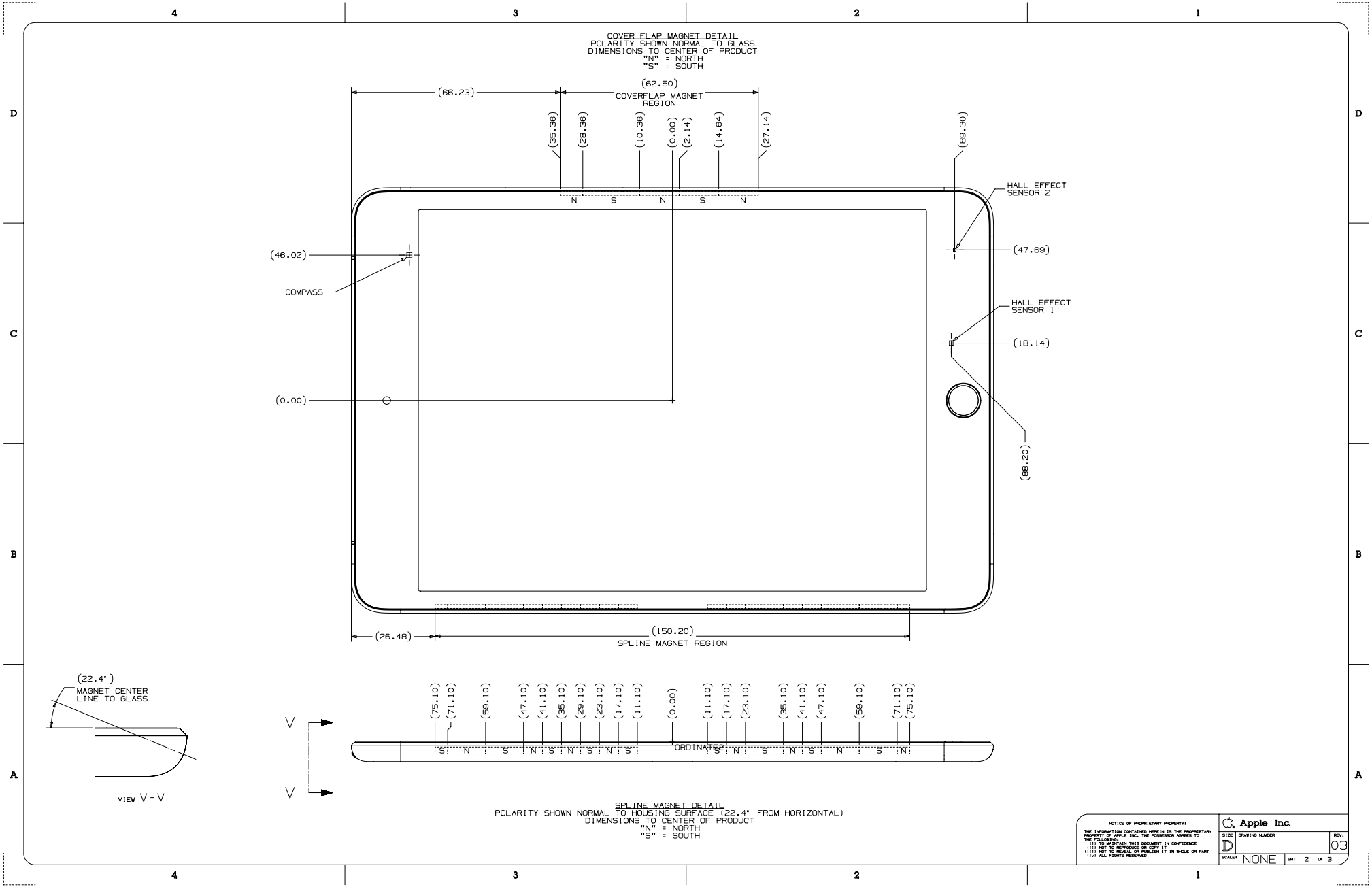
COVER FLAP MAGNET DETAIL
POLARITY SHOWN NORMAL TO GLASS
DIMENSIONS TO CENTER OF PRODUCT
"N" = NORTH
"S" = SOUTH
(66.23)
(62.50)
COVERFLAP MAGNET REGION
(35.36)
(28.36)
(10.36)
(0.00)
(2.14)
(14.64)
(27.14)
(89.30)
N S N S N
HALL EFFECT SENSOR 2
(46.02)
COMPASS
(47.69)
HALL EFFECT SENSOR 1
(18.14)
(0.00)
(68.20)
(26.48)
(150.20)
SPLINE MAGNET REGION
(22.4°)
MAGNET CENTER LINE TO GLASS
VIEW V - V
(75.10) (71.10) (59.10) (47.10) (41.10) (35.10) (29.10) (23.10) (17.10) (11.10) (0.00) (11.10) (17.10) (23.10) (35.10) (41.10) (47.10) (59.10) (71.10) (75.10)
S N S N S N

56.122 iPad mini（第 5 代）无线局域网 + 蜂窝网络机型 3/3

[英语]

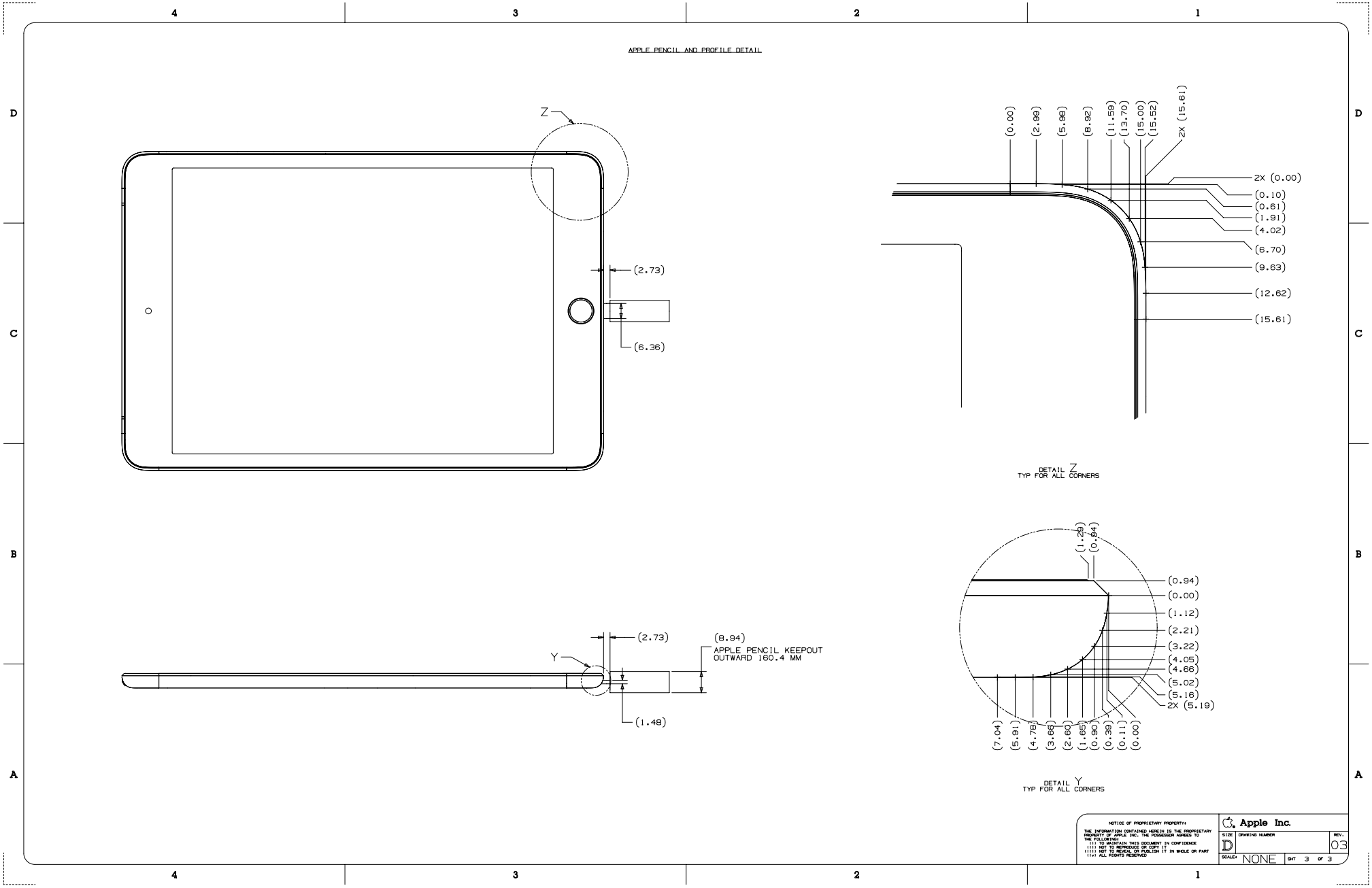

56.123 12.9 英寸 iPad Pro（第 3 代）1/3

[英语]

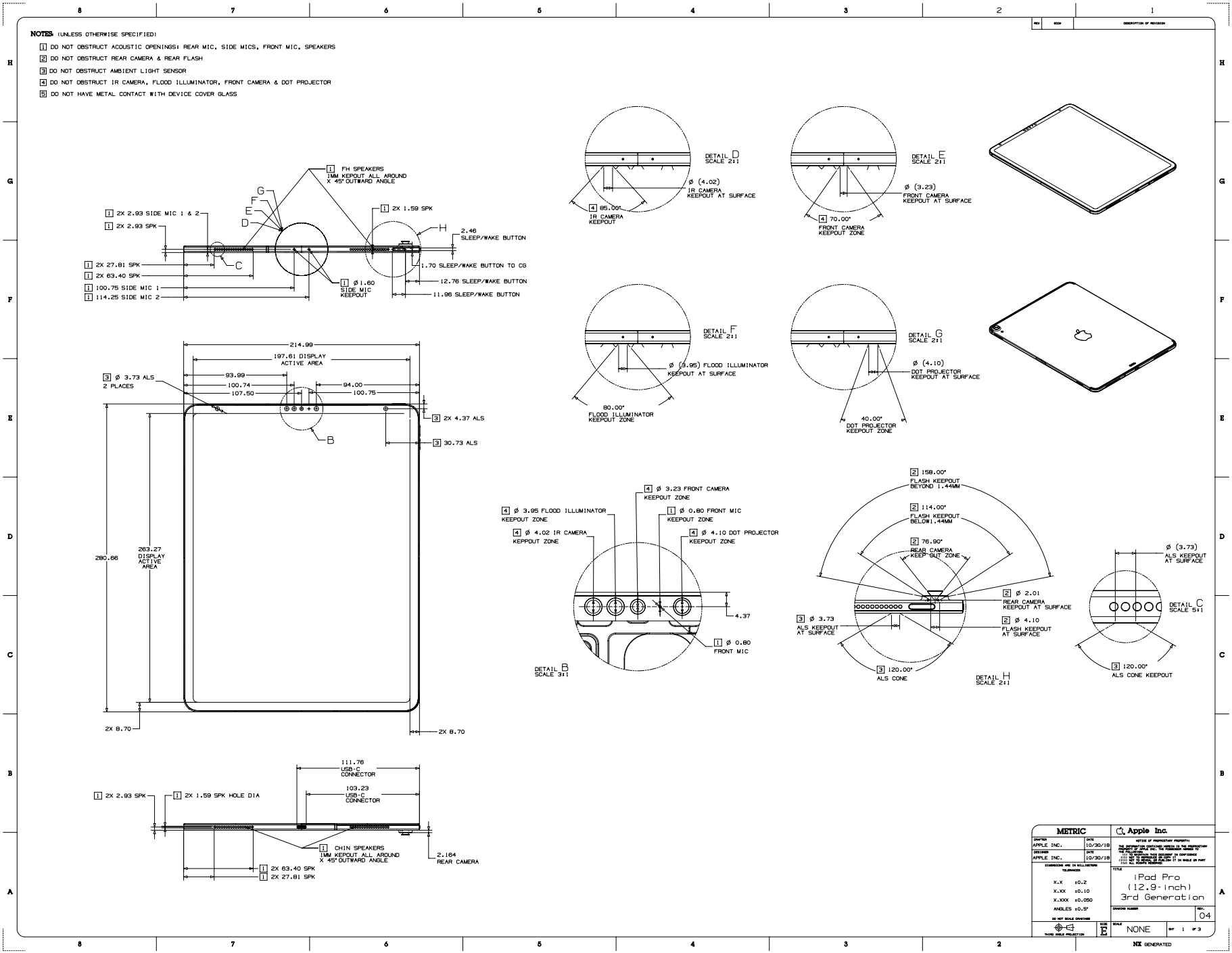

56.124 12.9 英寸 iPad Pro（第 3 代）2/3

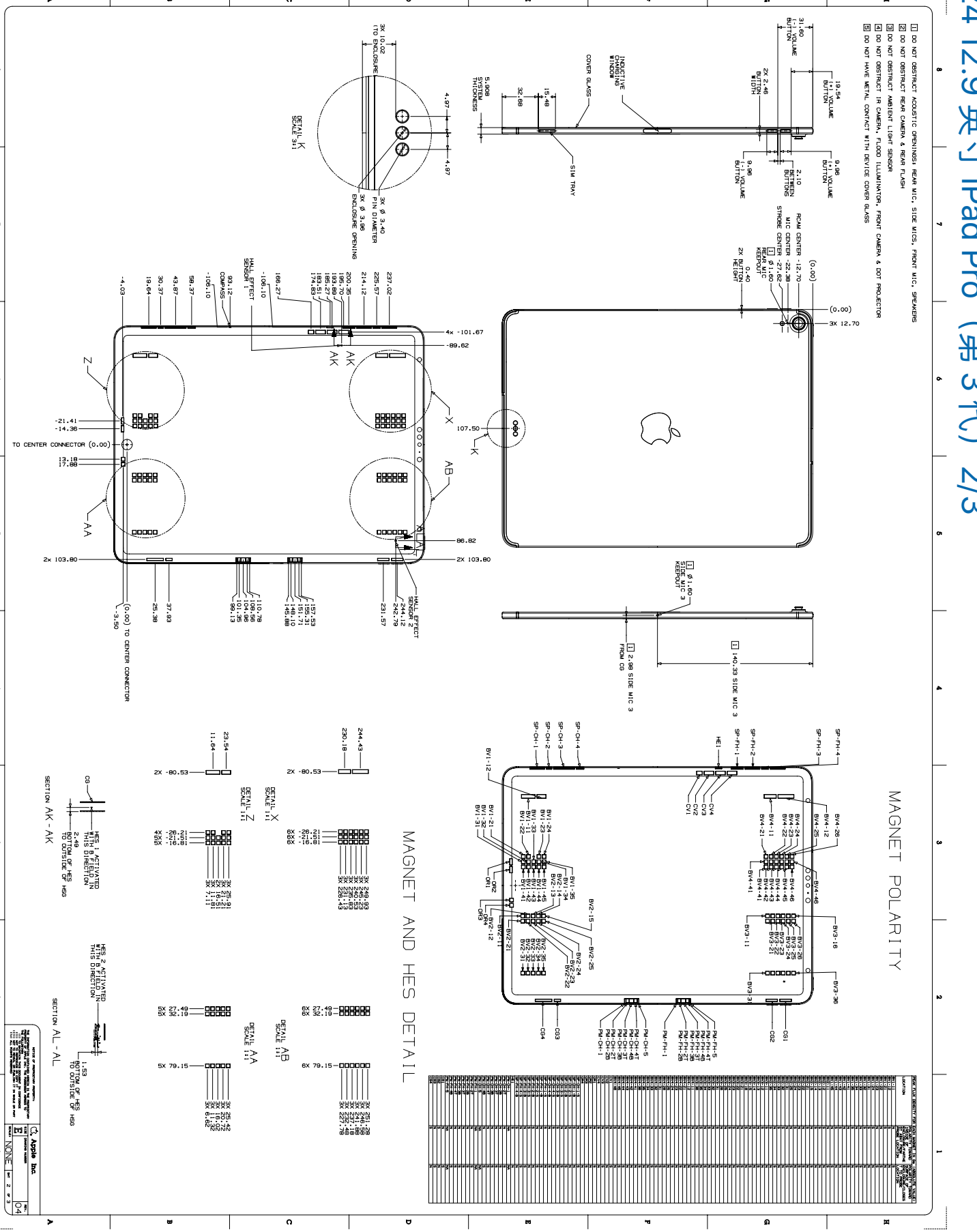

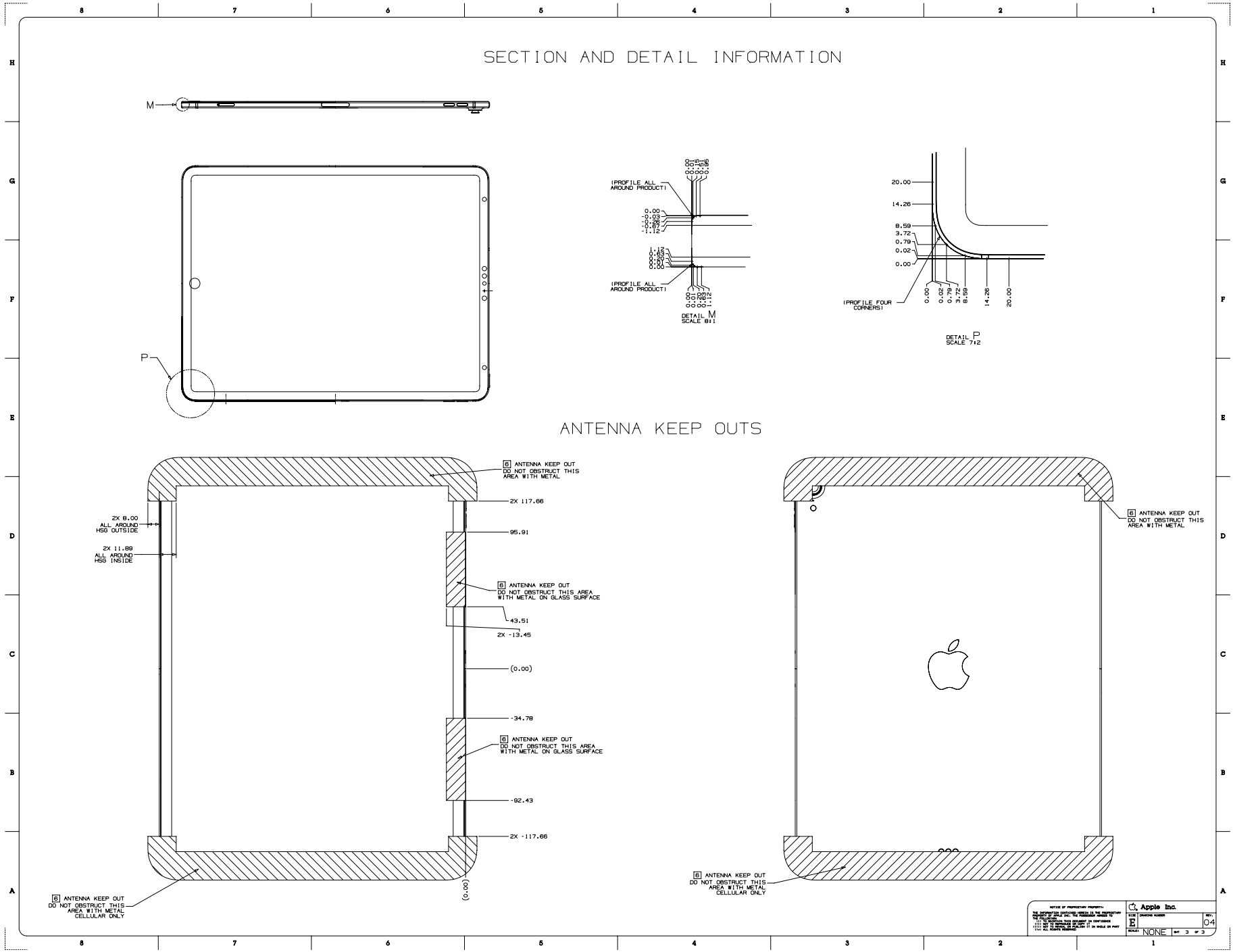
SECTION AND DETAIL INFORMATION
M
P
DETAIL M
SCALE 8:1
DETAIL P
SCALE 7:2
ANTENNA KEEP OUTS
6 ANTENNA KEEP OUT DO NOT OBSTRUCT THIS AREA WITH METAL
2X 117.66
95.91
6 ANTENNA KEEP OUT DO NOT OBSTRUCT THIS AREA WITH METAL ON GLASS SURFACE
43.51
2X -13.45
(0.00)
-34.78
6 ANTENNA KEEP OUT DO NOT OBSTRUCT THIS AREA WITH METAL ON GLASS SURFACE
-92.43
2X -117.66
2X 8.00 ALL AROUND HSG OUTSIDE
2X 11.89 ALL AROUND HSG INSIDE
6 ANTENNA KEEP OUT DO NOT OBSTRUCT THIS AREA WITH METAL CELLULAR ONLY
6 ANTENNA KEEP OUT DO NOT OBSTRUCT THIS AREA WITH METAL
6 ANTENNA KEEP OUT DO NOT OBSTRUCT THIS AREA WITH METAL CELLULAR ONLY
Apple Inc.
NONE

56.126 11 英寸 iPad Pro（第 1 代）1/3

[英语]

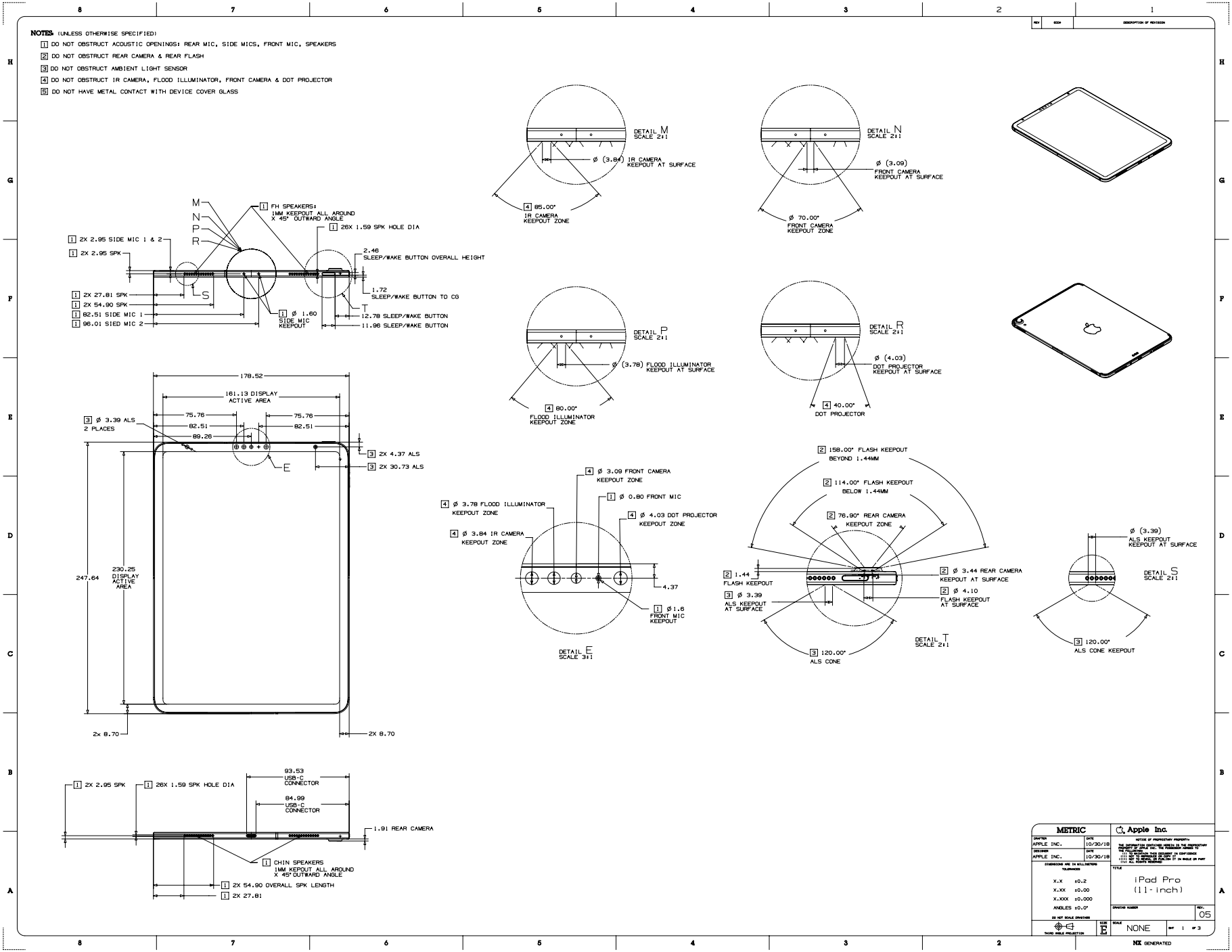

56.127 11 英寸 iPad Pro（第 1 代）2/3

[英语]

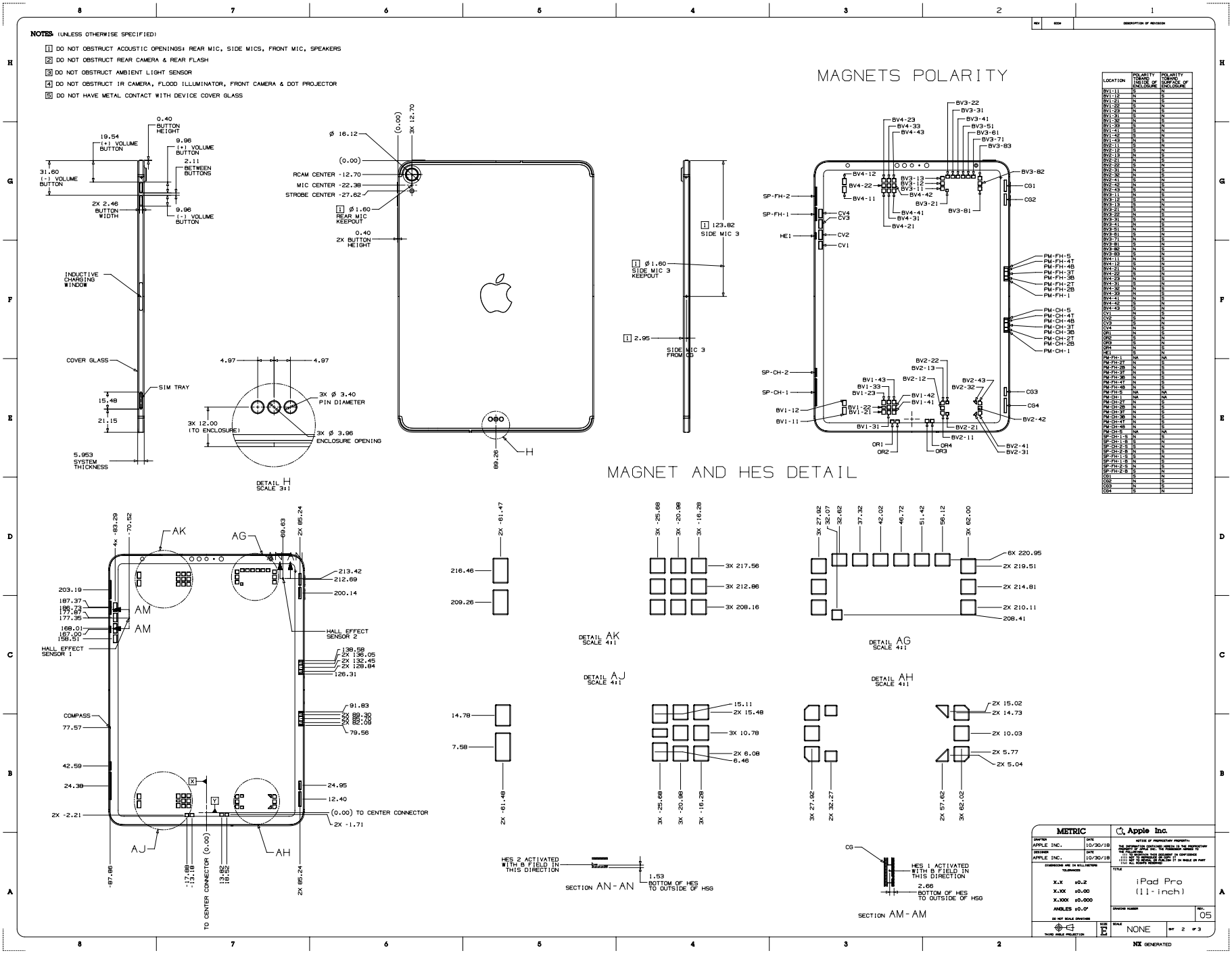

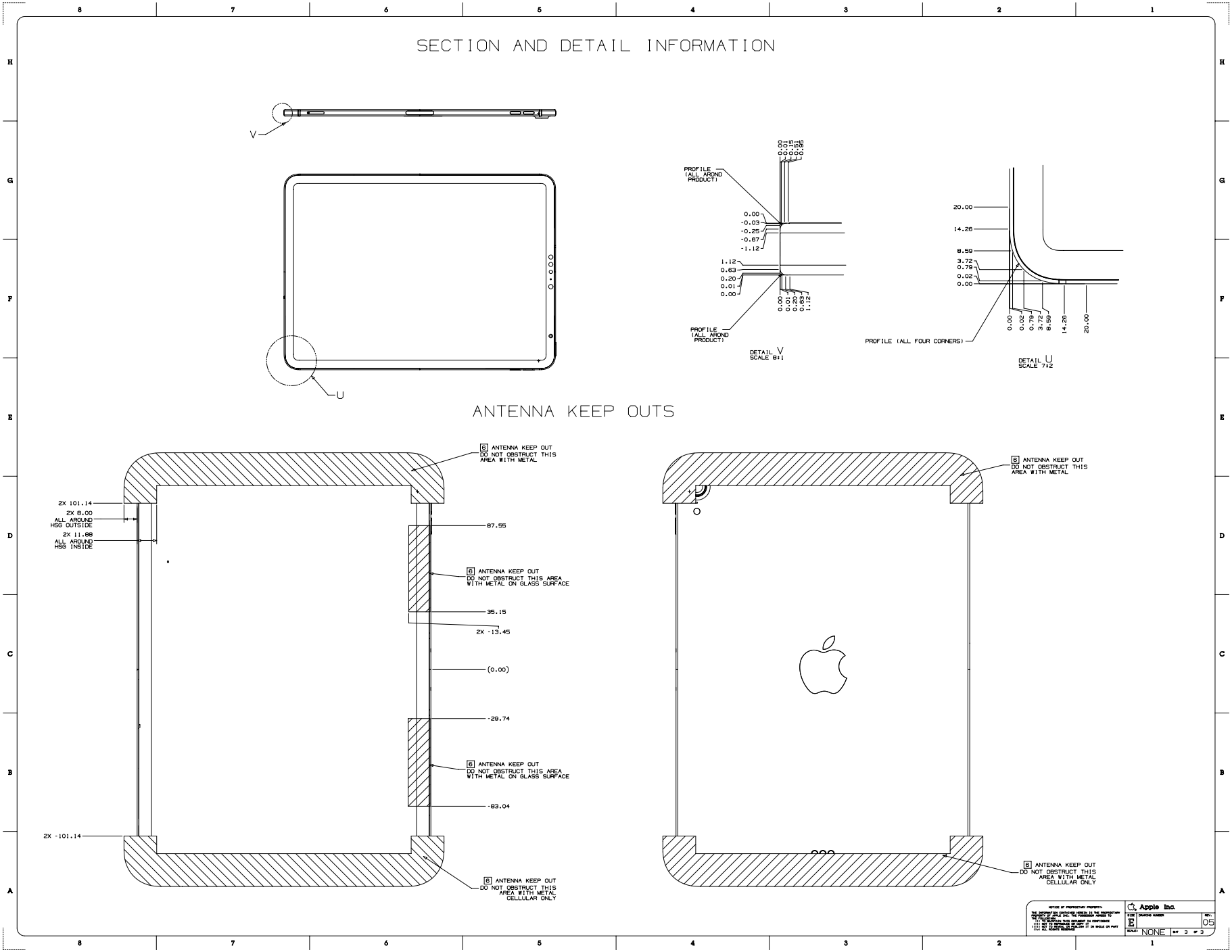
SECTION AND DETAIL INFORMATION
V
U
PROFILE (ALL AROND PRODUCT)
0.00
-0.03
-0.25
-0.67
-1.12
1.12
0.63
0.20
0.01
0.00
DETAIL V
SCALE 8:1
20.00
14.26
8.59
3.72
0.79
0.02
0.00
PROFILE (ALL FOUR CORNERS)
DETAIL U
SCALE 7:2
ANTENNA KEEP OUTS
6 ANTENNA KEEP OUT DO NOT OBSTRUCT THIS AREA WITH METAL
2X 101.14
2X 8.00 ALL AROUND HSG OUTSIDE
2X 11.88 ALL AROUND HSG INSIDE
87.55
6 ANTENNA KEEP OUT DO NOT OBSTRUCT THIS AREA WITH METAL ON GLASS SURFACE
35.15
2X -13.45
(0.00)
-29.74
6 ANTENNA KEEP OUT DO NOT OBSTRUCT THIS AREA WITH METAL ON GLASS SURFACE
-83.04
2X -101.14
6 ANTENNA KEEP OUT DO NOT OBSTRUCT THIS AREA WITH METAL CELLULAR ONLY
6 ANTENNA KEEP OUT DO NOT OBSTRUCT THIS AREA WITH METAL
6 ANTENNA KEEP OUT DO NOT OBSTRUCT THIS AREA WITH METAL CELLULAR ONLY
Apple Inc.
NONE
05

56.129 12.9 英寸 iPad Pro（第 2 代）无线局域网机型

[英语]

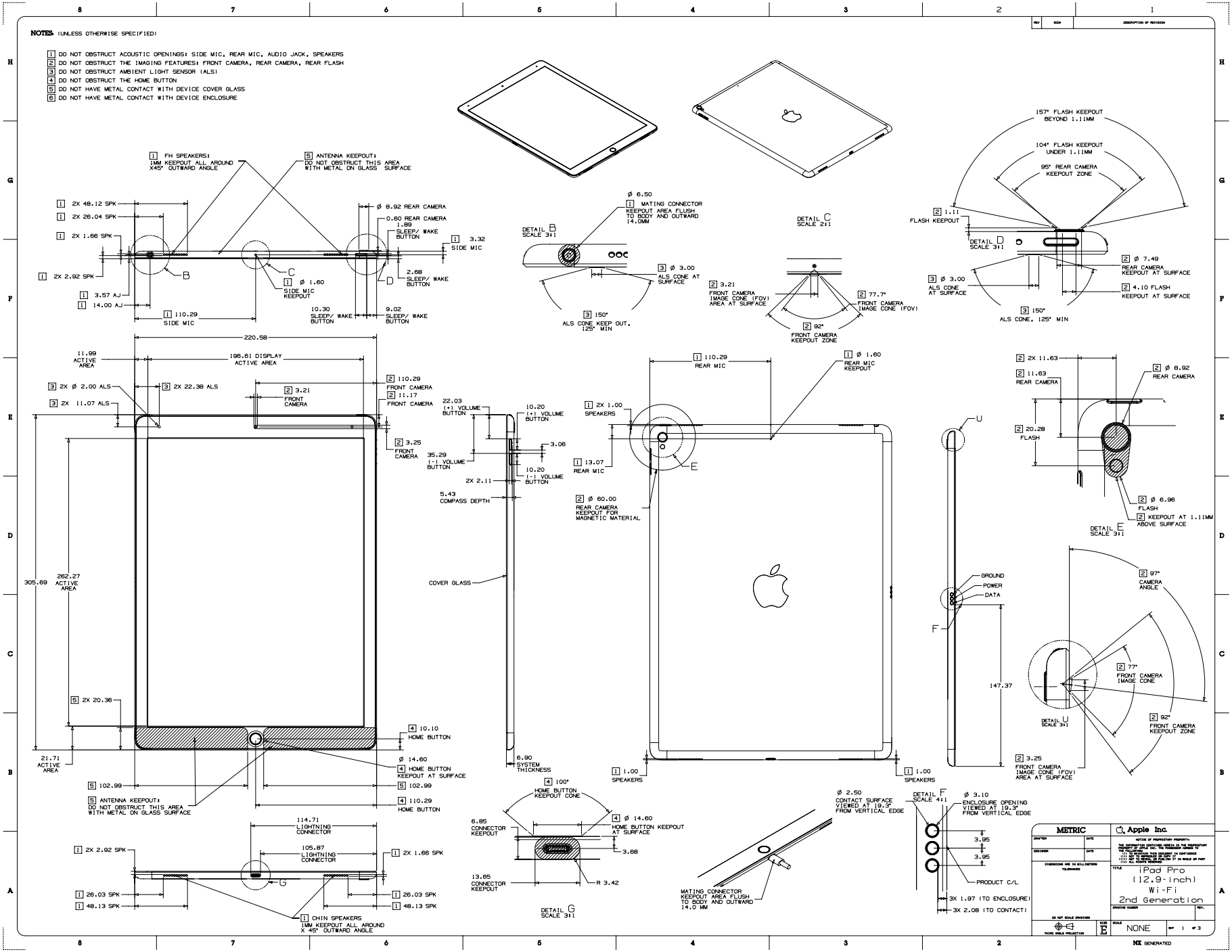

56.130 12.9 英寸 iPad Pro（第 2 代）无线局域网 + 蜂窝网络机型

[英语]

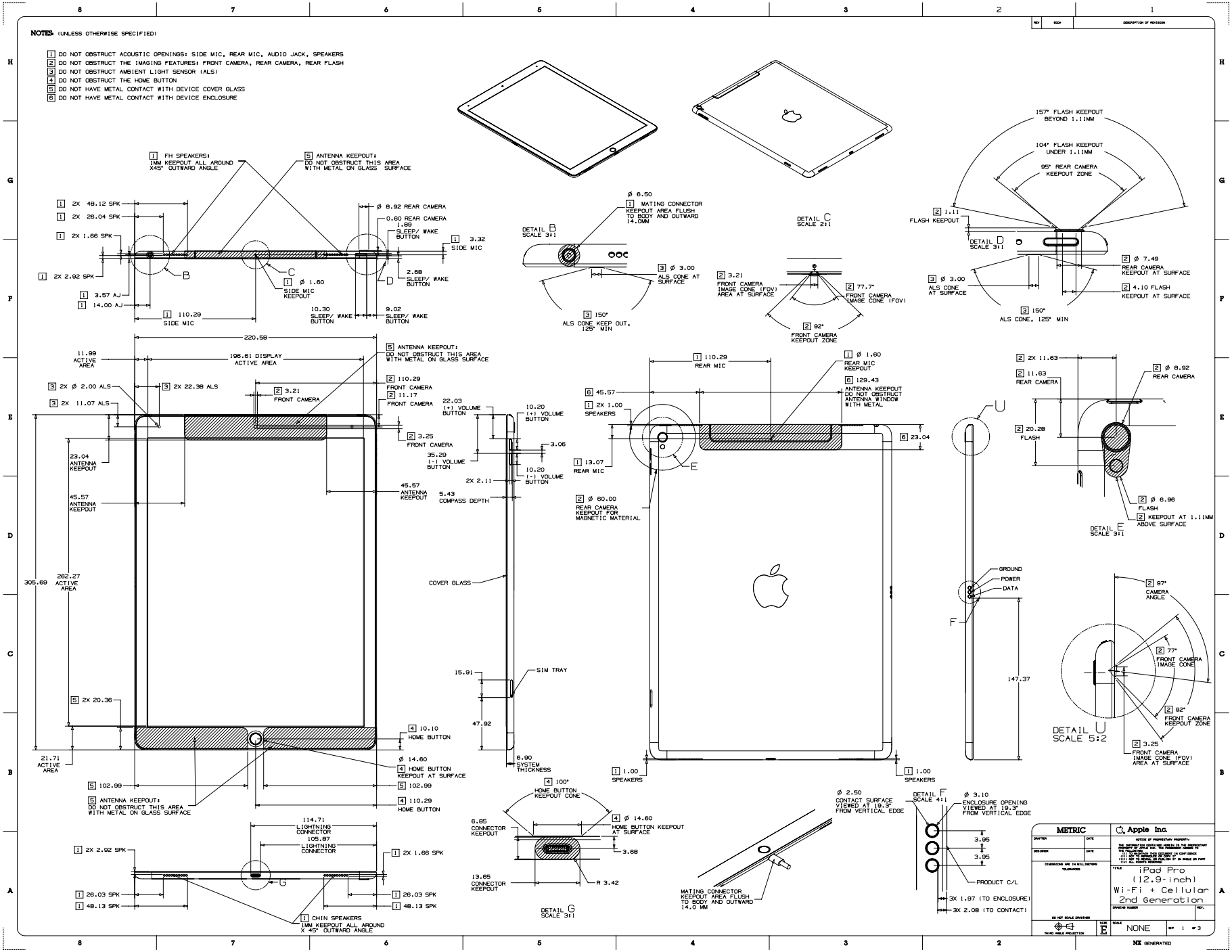

版权所有 © 2023 Apple Inc. 保留所有权利。

56.131 12.9 英寸 iPad Pro（第 2 代）磁体/霍尔效应传感器 1/2

[英语]

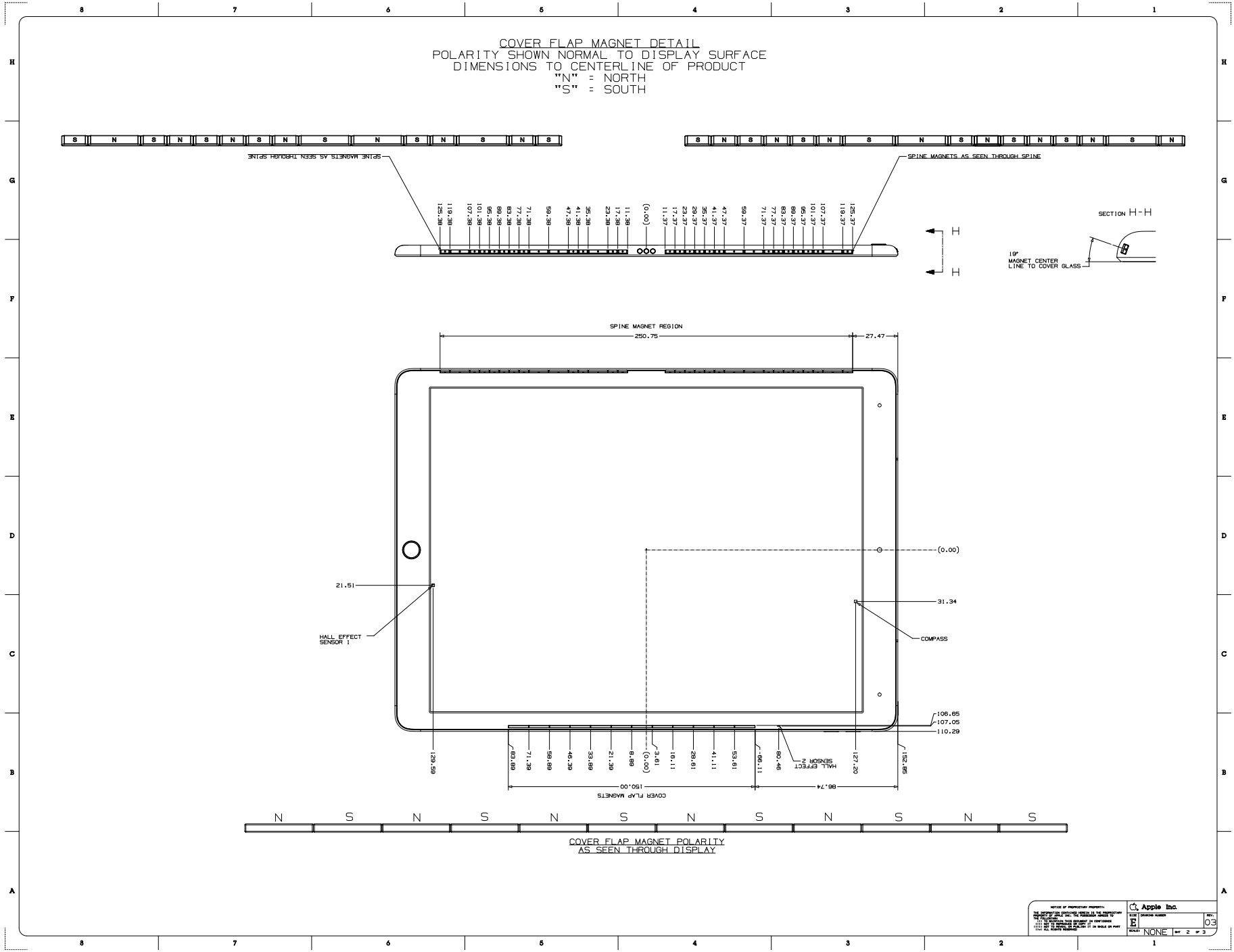

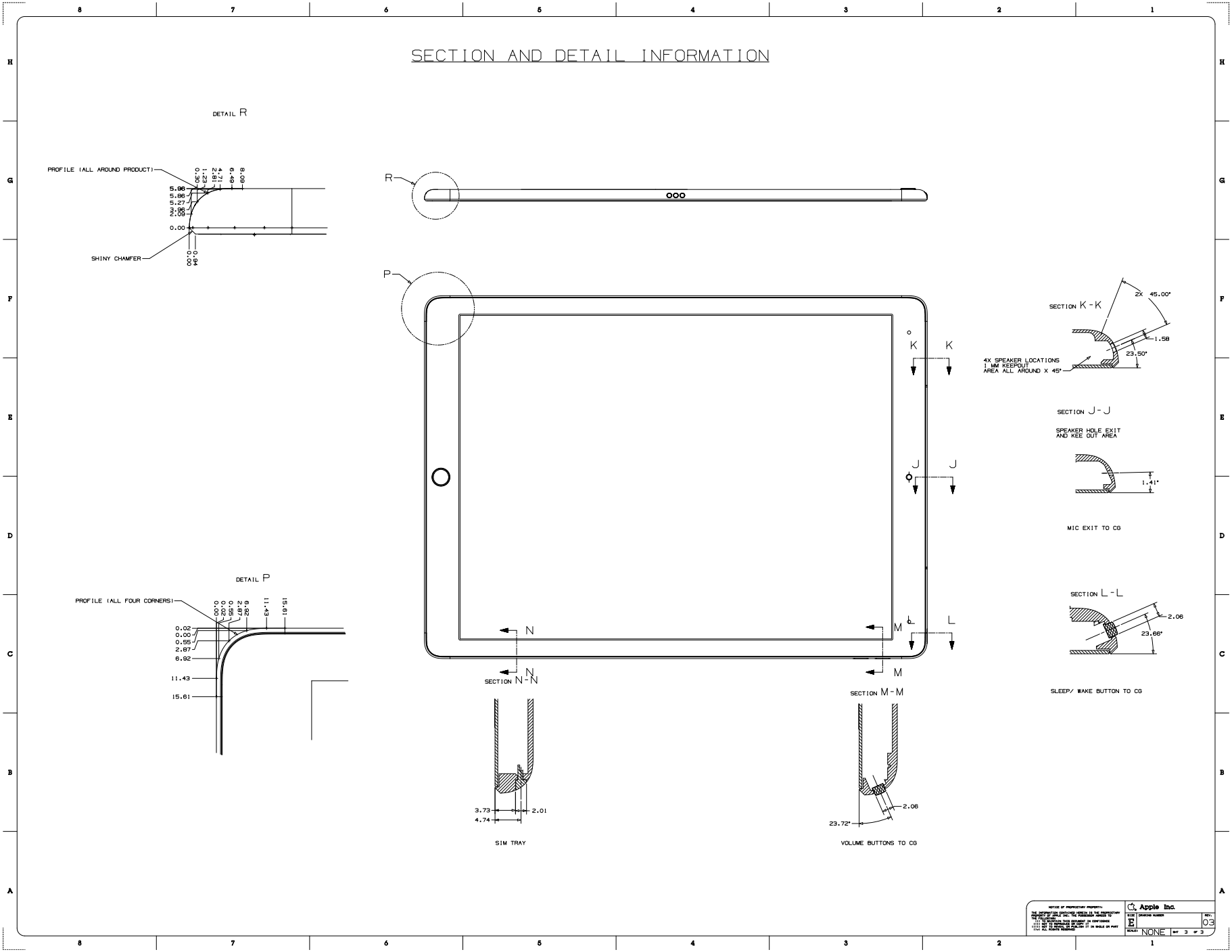
SECTION AND DETAIL INFORMATION
DETAIL R
PROFILE (ALL AROUND PRODUCT)
SHINY CHAMFER
DETAIL P
PROFILE (ALL FOUR CORNERS)
SECTION N-N
SIM TRAY
SECTION M-M
VOLUME BUTTONS TO CG
SECTION K-K
4X SPEAKER LOCATIONS
1 MM KEEPOUT
AREA ALL AROUND X 45°
SECTION J-J
SPEAKER HOLE EXIT
AND KEE OUT AREA
MIC EXIT TO CG
SECTION L-L
SLEEP/ WAKE BUTTON TO CG
Apple Inc.
NONE

56.133 10.5 英寸 iPad Pro 无线局域网机型

[英语]

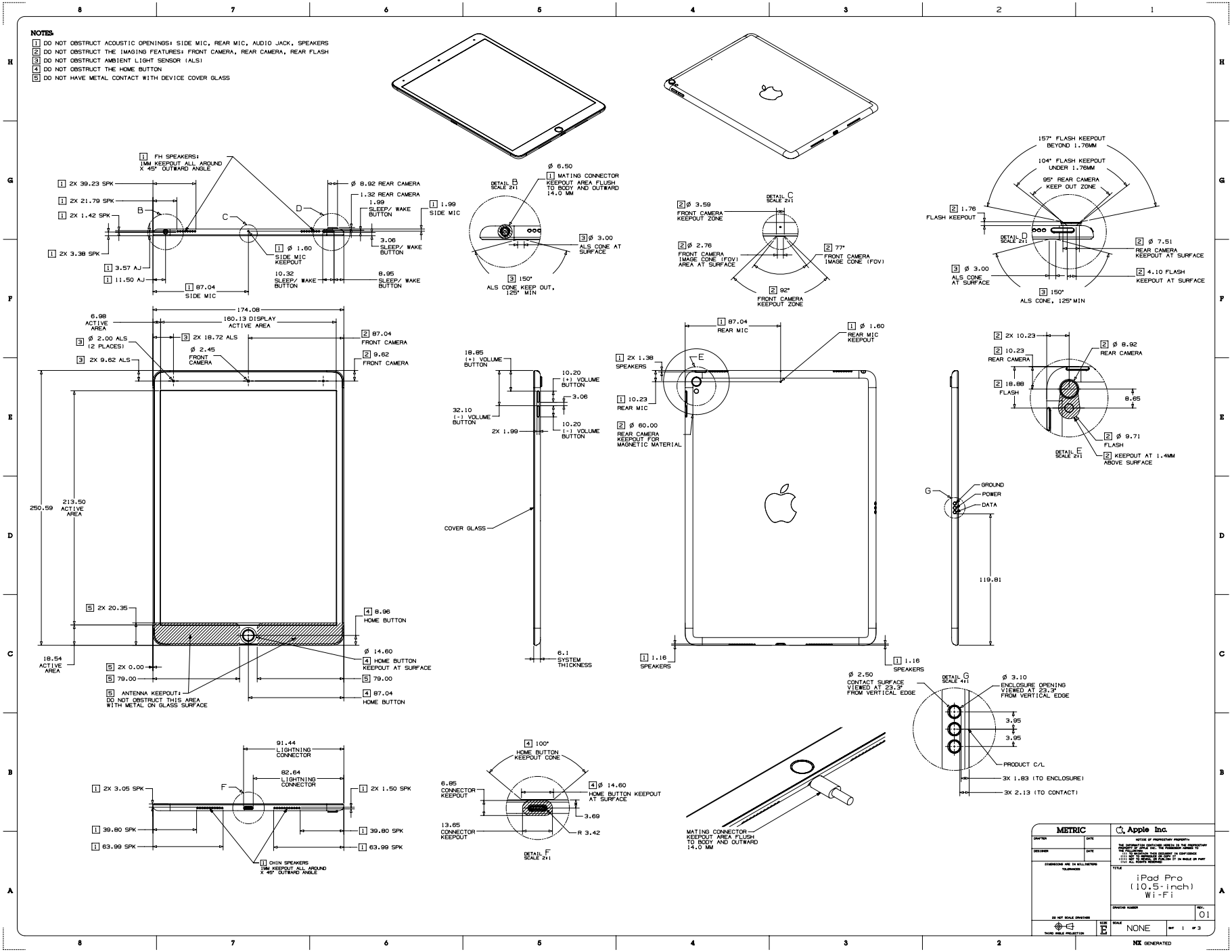

56.134 10.5 英寸 iPad Pro 无线局域网 + 蜂窝网络机型

[英语]

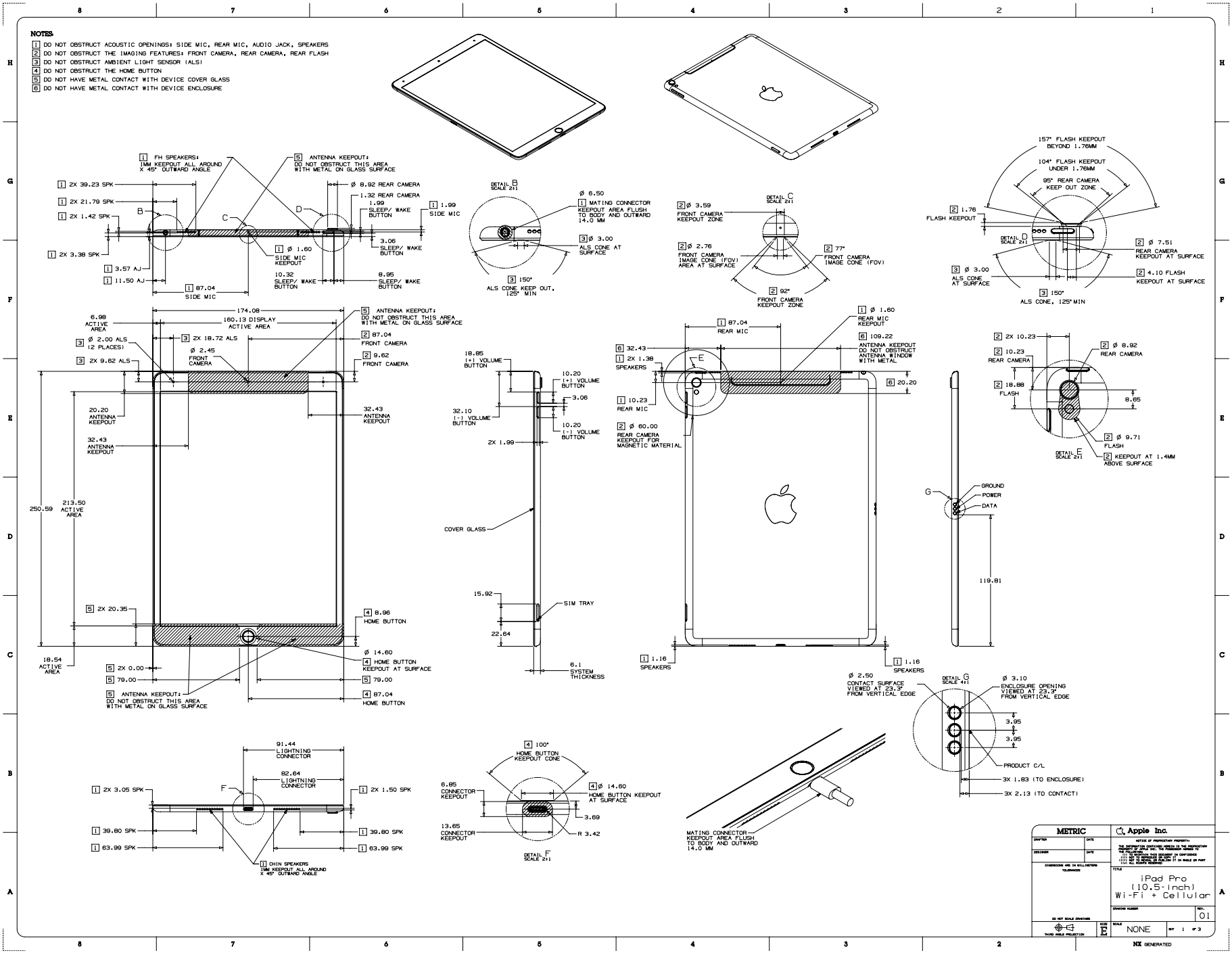

56.135 10.5 英寸 iPad Pro 磁体/霍尔效应传感器 1/2

[英语]

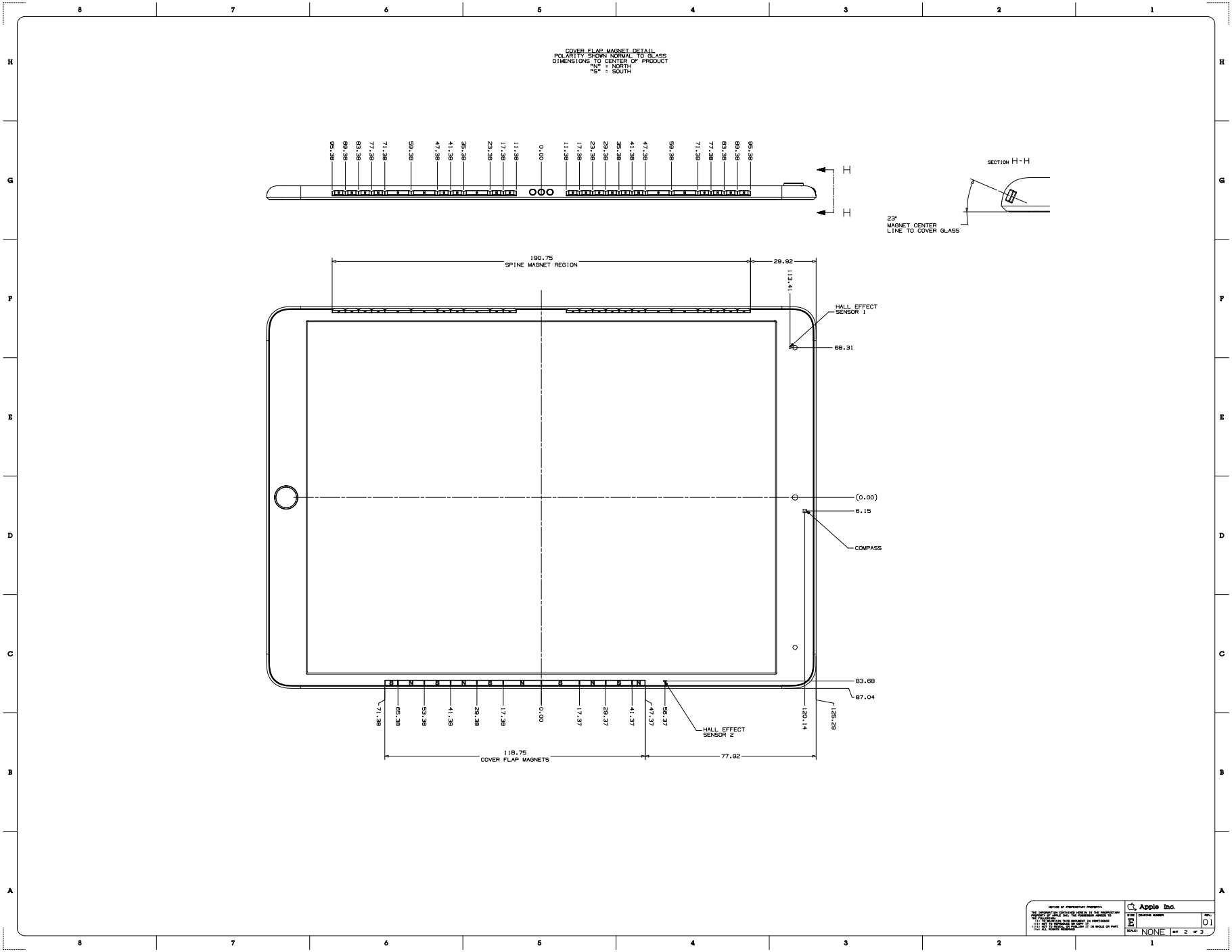

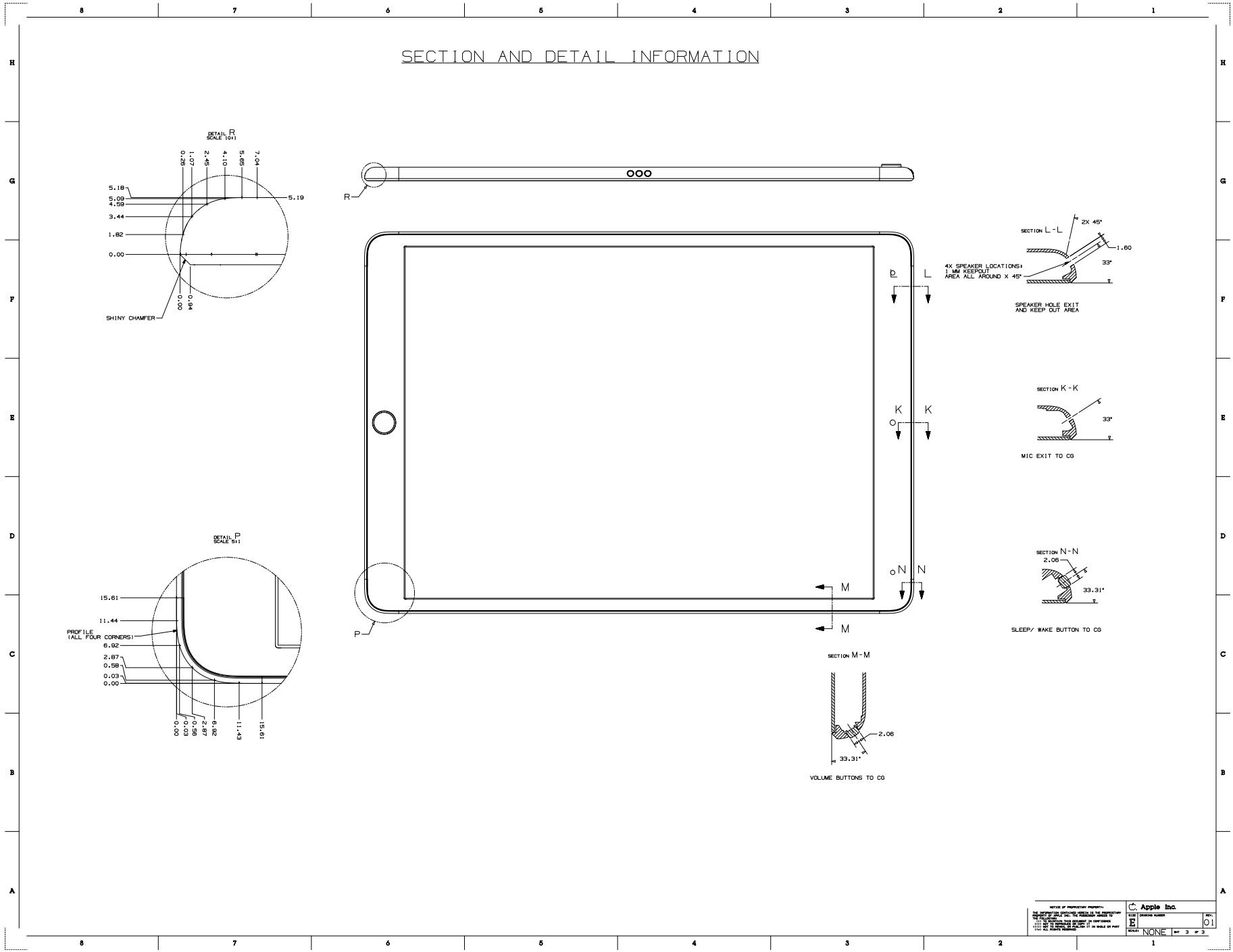
SECTION AND DETAIL INFORMATION
DETAIL R
SCALE 10:1
SHINY CHAMFER
DETAIL P
SCALE 5:1
PROFILE
(ALL FOUR CORNERS)
SECTION L-L
4X SPEAKER LOCATIONS:
1 MM KEEPOUT
AREA ALL AROUND X 45°
SPEAKER HOLE EXIT
AND KEEP OUT AREA
SECTION K-K
MIC EXIT TO CG
SECTION N-N
SLEEP/ WAKE BUTTON TO CG
SECTION M-M
VOLUME BUTTONS TO CG
Apple Inc.
NONE

56.137 iPad（第 5 代和第 6 代）无线局域网 + 蜂窝网络机型

[英语]

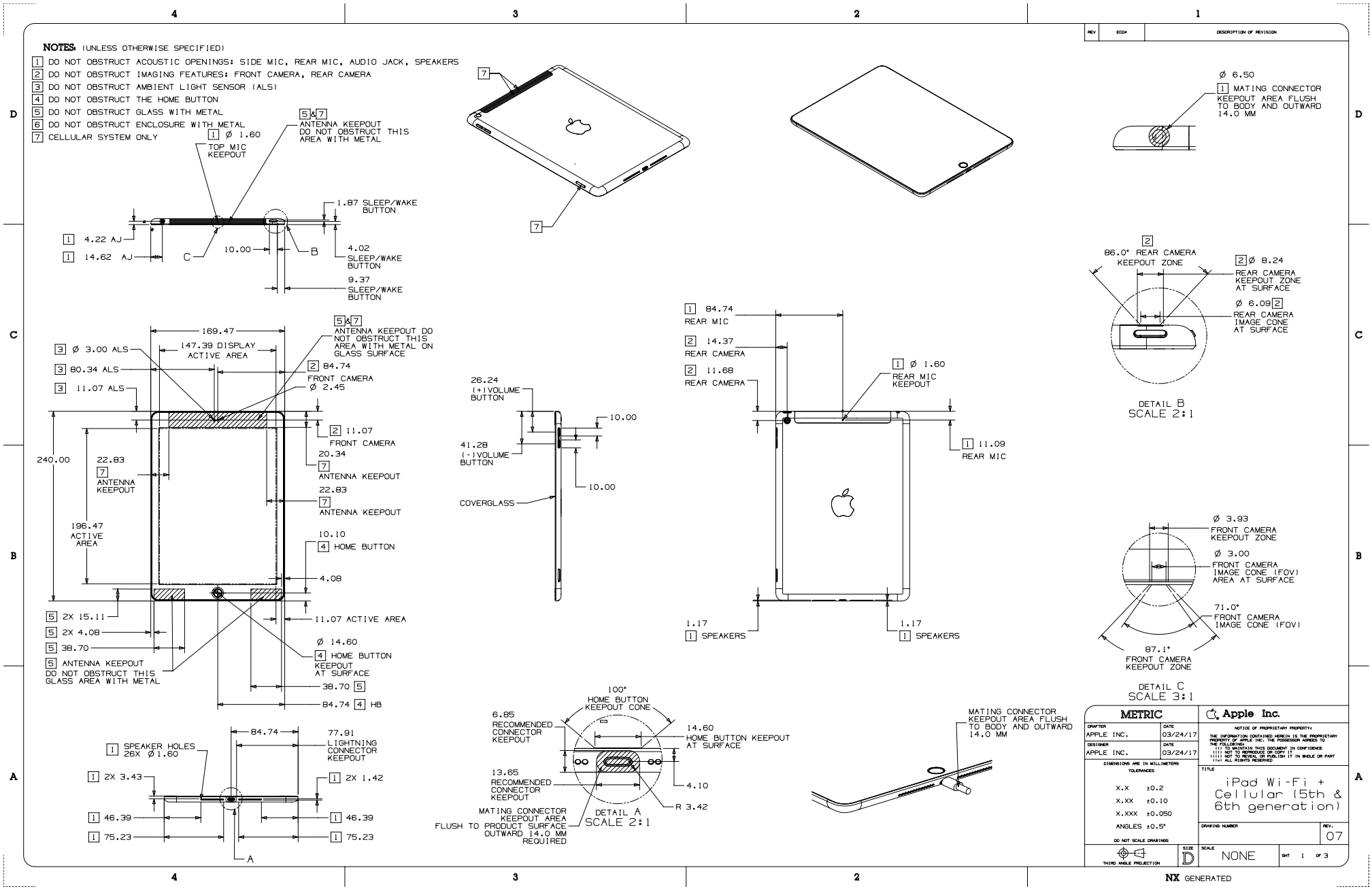

56.138 iPad（第 5 代和第 6 代）磁体/霍尔效应传感器 1/2

[英语]

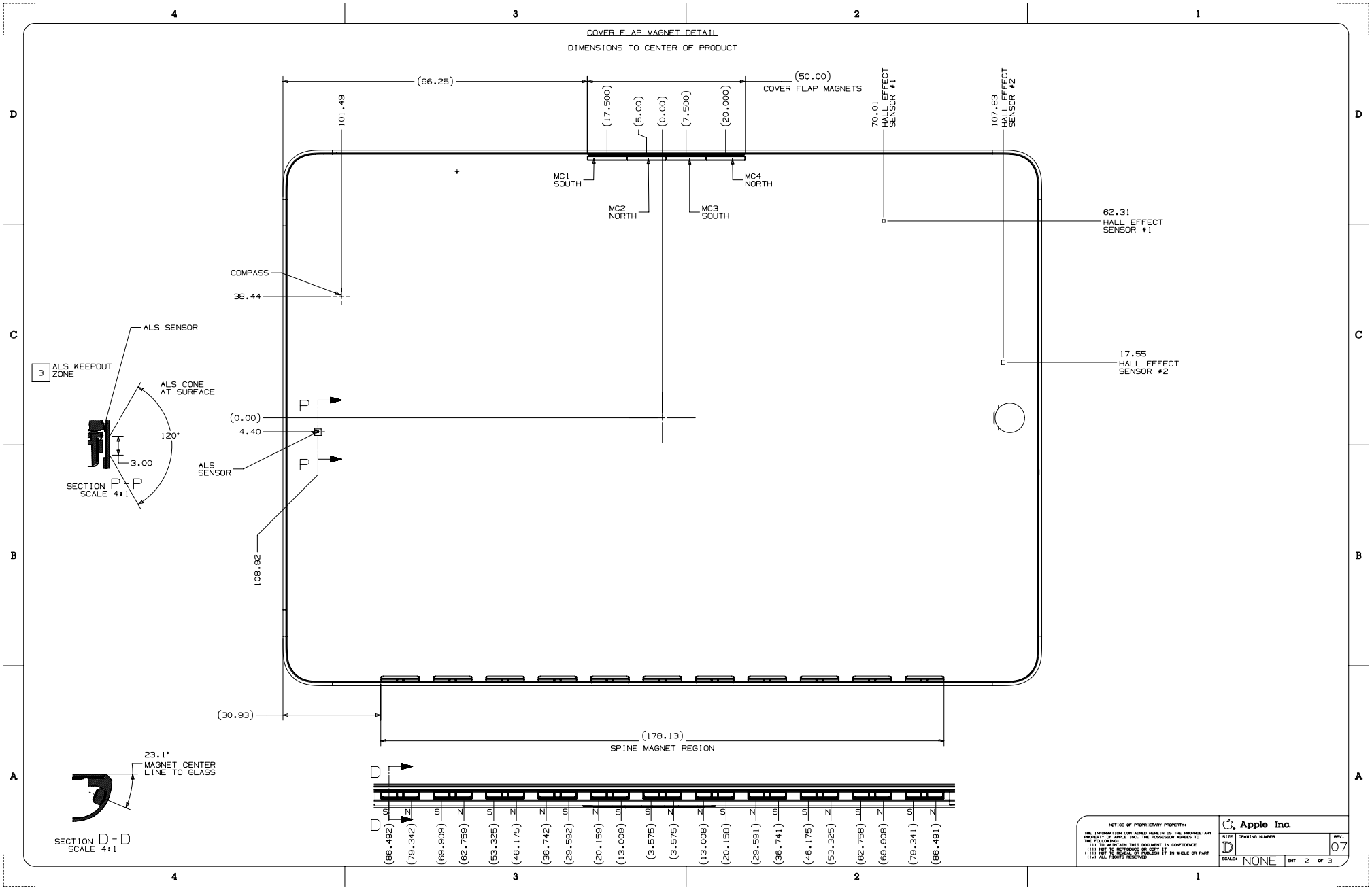

56.139 iPad（第 5 代和第 6 代）磁体/霍尔效应传感器 2/2

[英语]

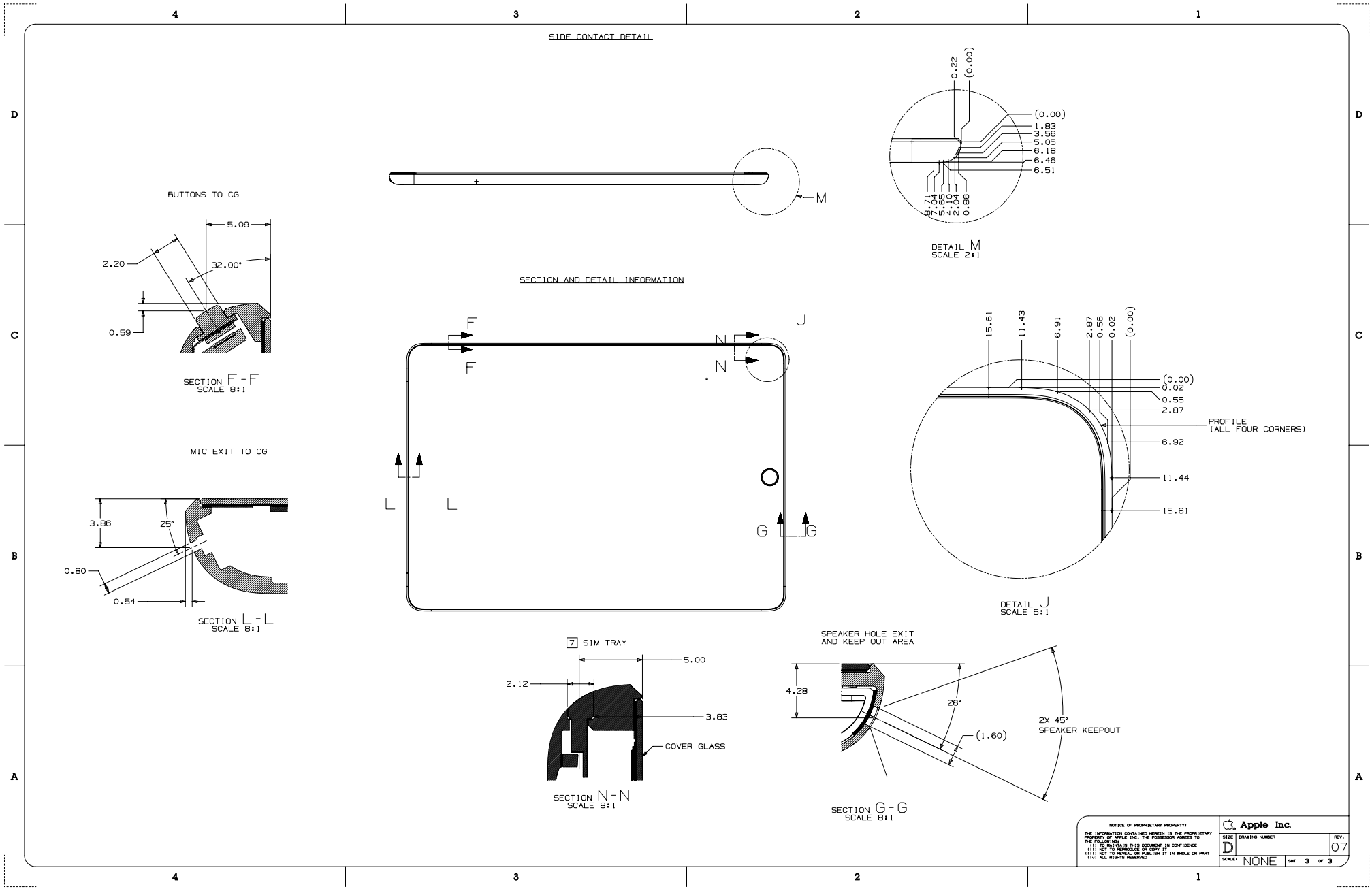

56.140 9.7 英寸 iPad Pro 无线局域网机型

[英语]

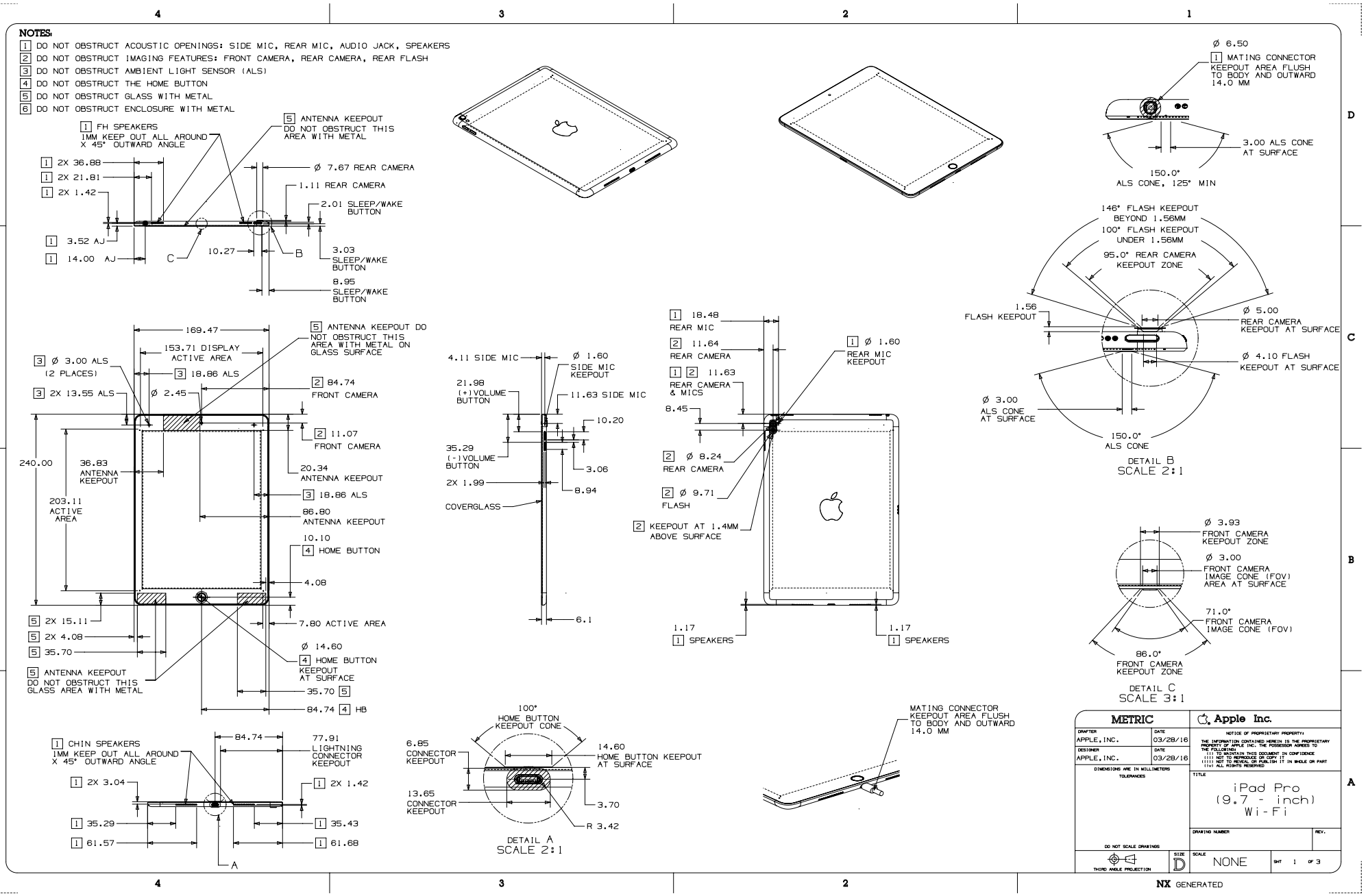

56.141 9.7 英寸 iPad Pro 无线局域网 + 蜂窝网络机型

[英语]

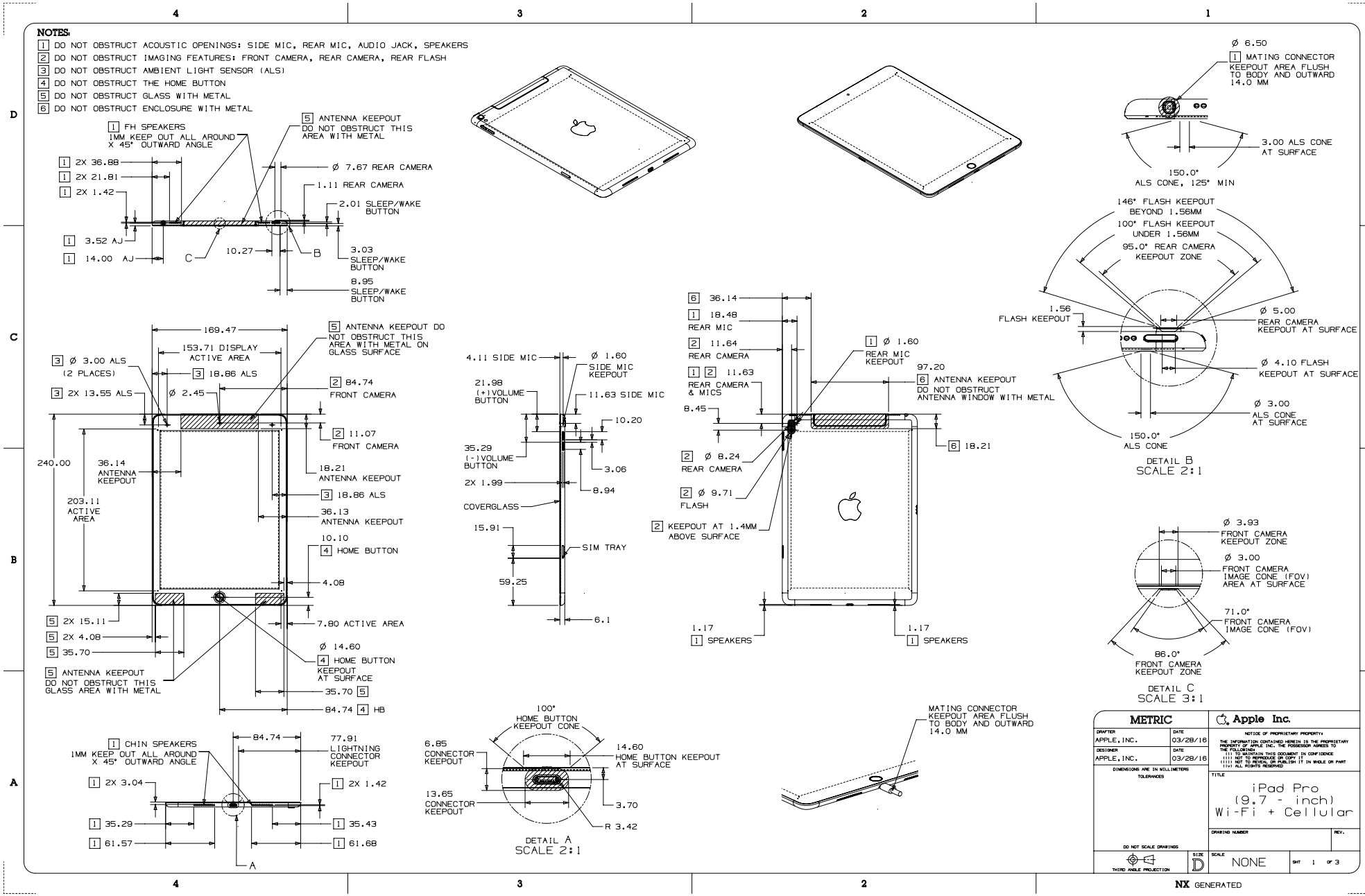

56.142 9.7 英寸 iPad Pro 磁体/霍尔效应传感器 1/2

[英语]

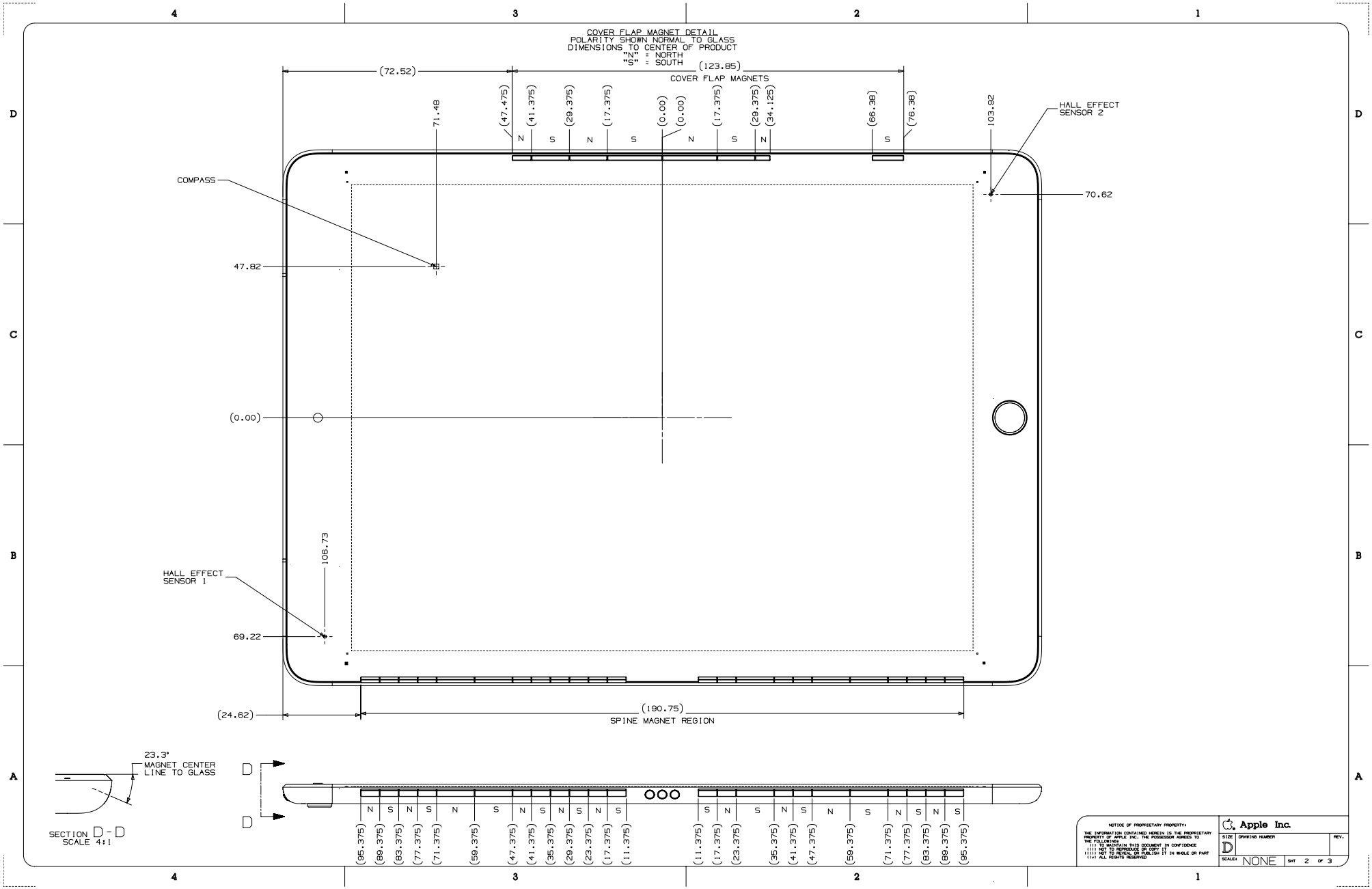

56.143 9.7 英寸 iPad Pro 磁体/霍尔效应传感器 2/2

[英语]

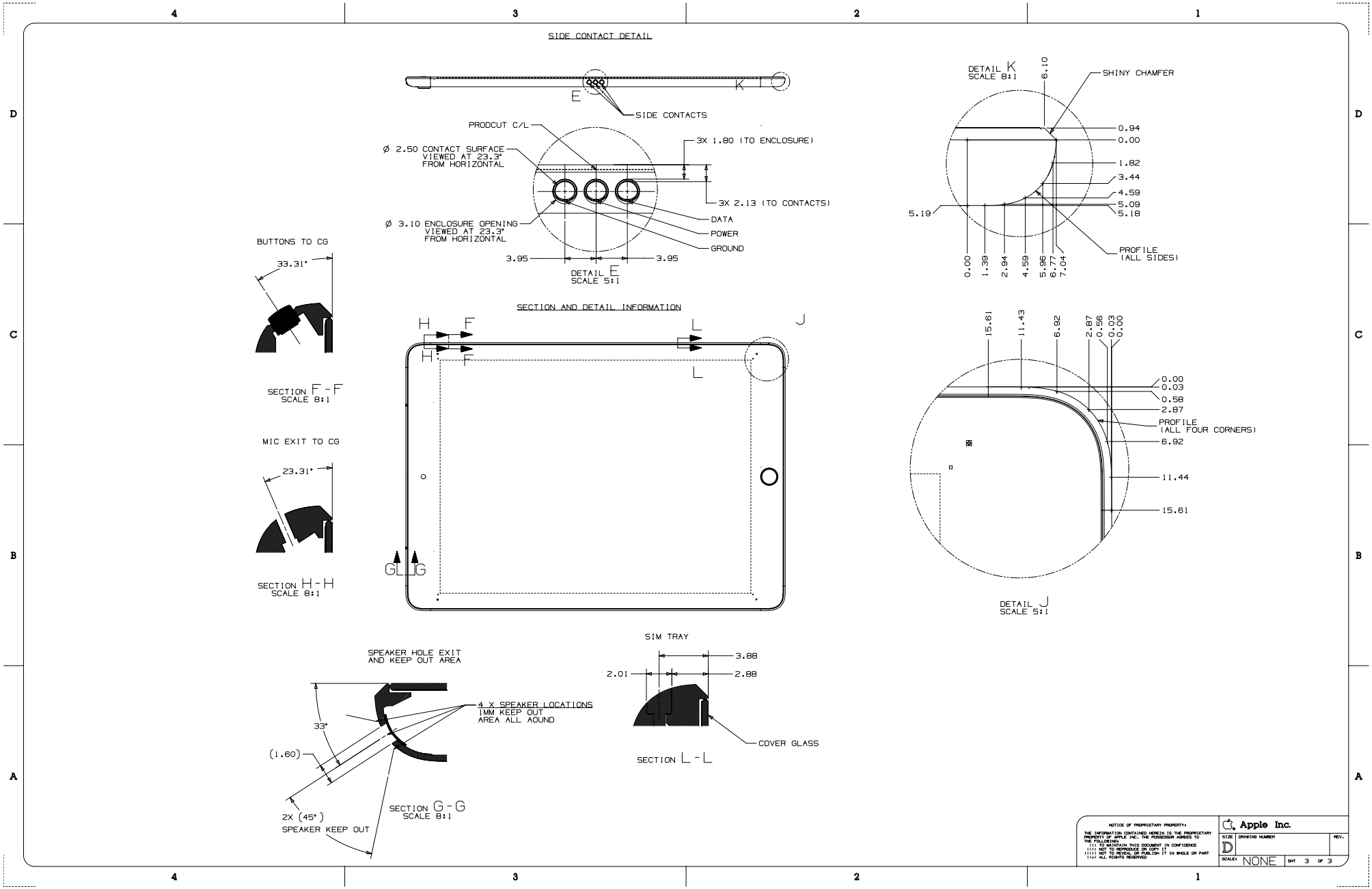

56.144 12.9 英寸 iPad Pro（第 1 代）无线局域网机型

[英语]

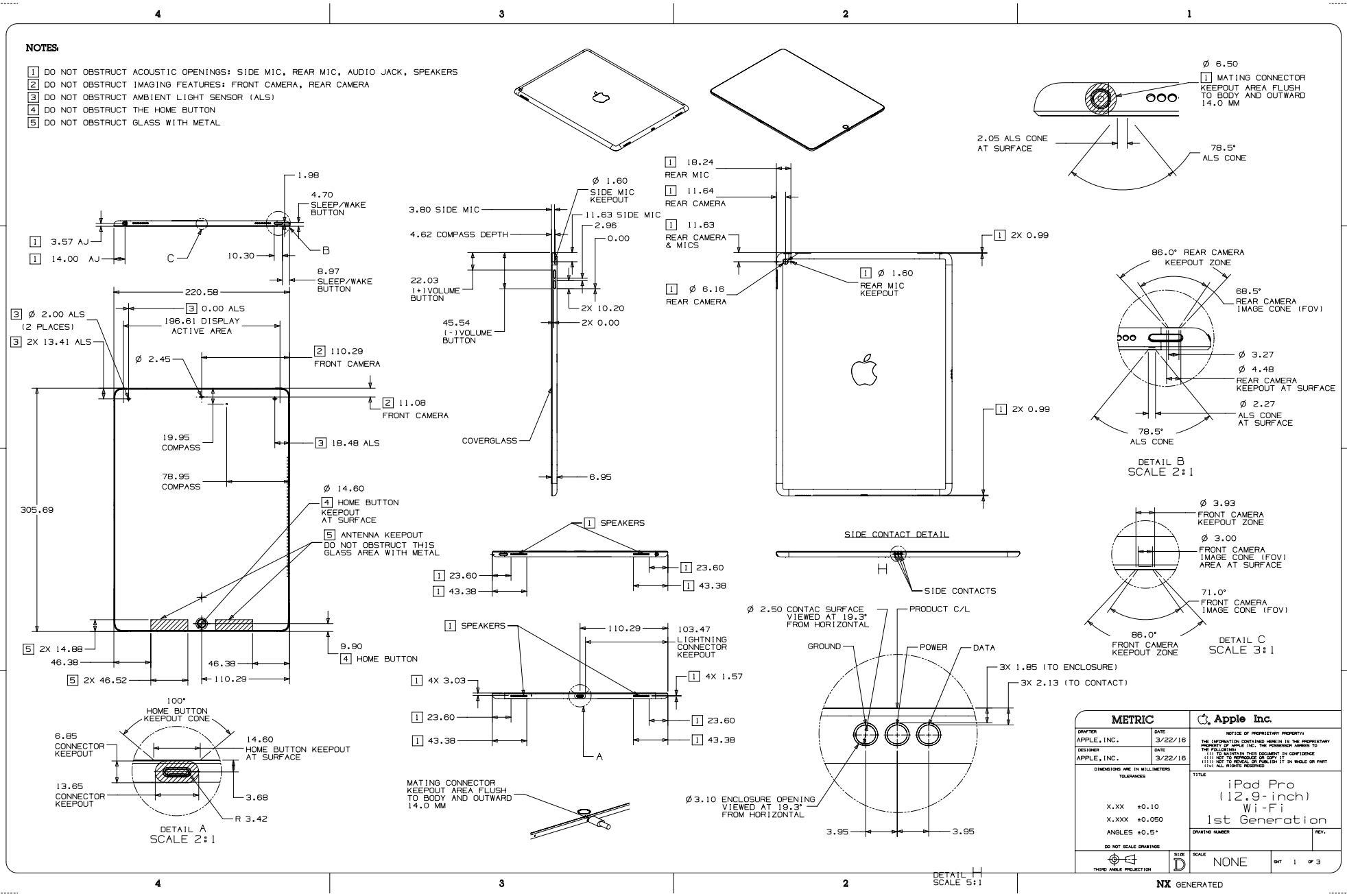

56.145 12.9 英寸 iPad Pro（第 1 代）无线局域网 + 蜂窝网络机型

[英语]

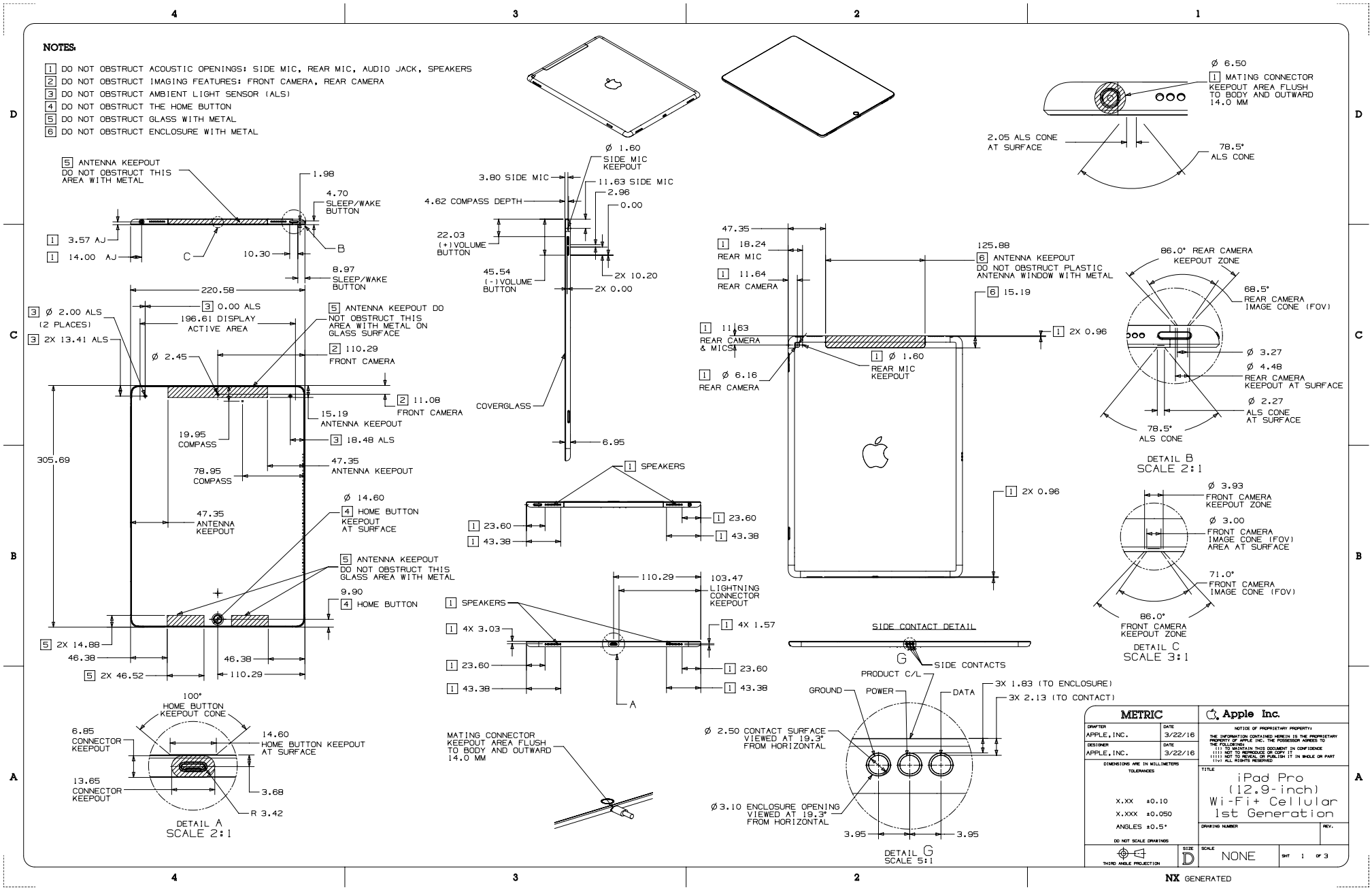

56.146 12.9 英寸 iPad Pro（第 1 代）磁体/霍尔效应传感器 1/2

[英语]

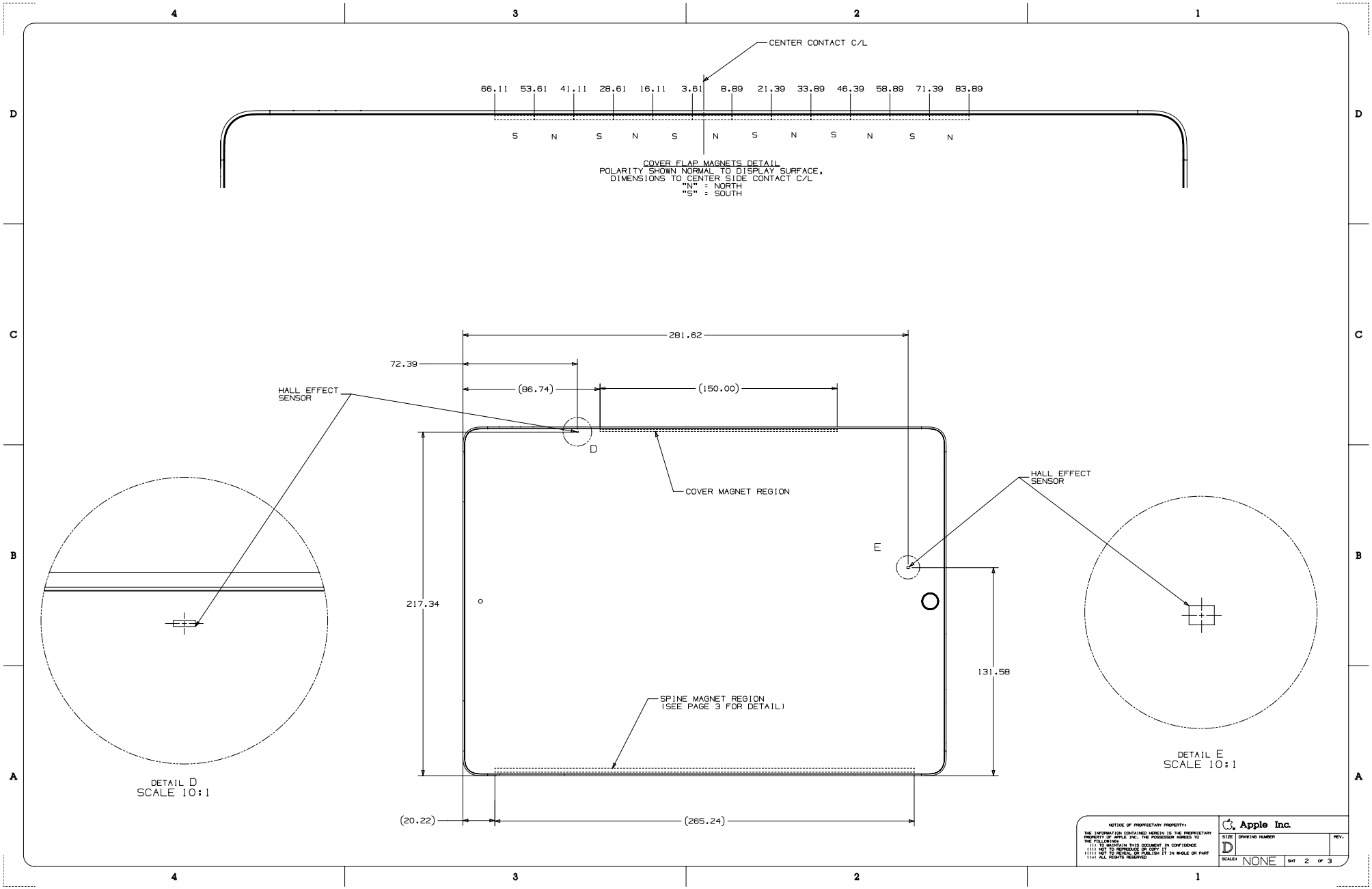

56.147 12.9 英寸 iPad Pro（第 1 代）磁体/霍尔效应传感器 2/2

[英语]

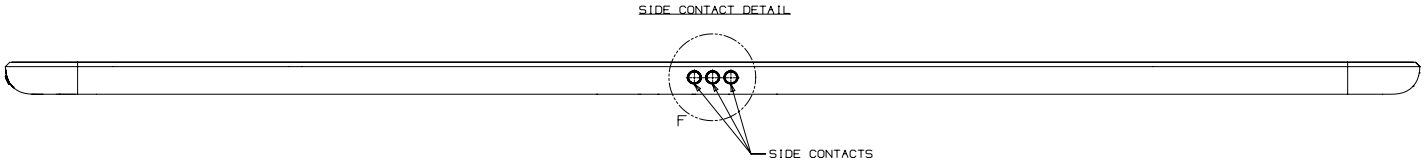

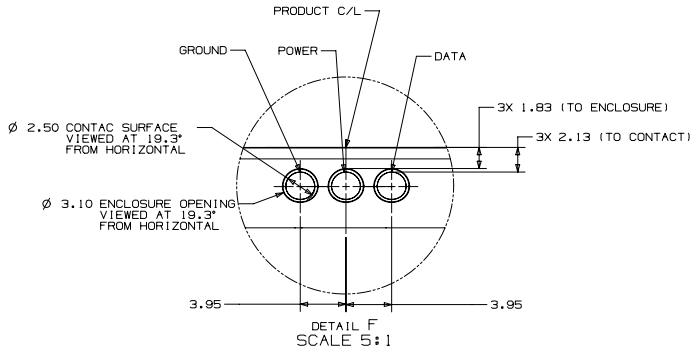

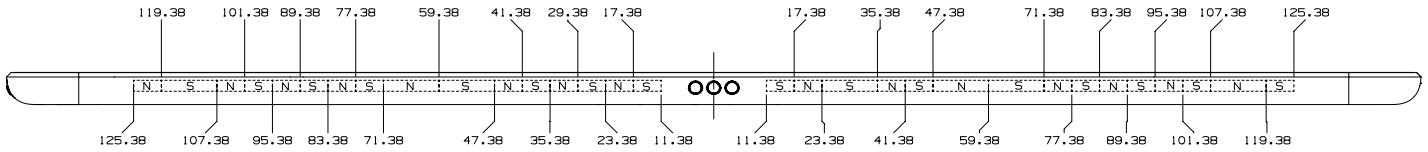

SPINE MAGNETS DETAIL
POLARITY SHOWN NORMAL TO HOUSING SURFACE AT CONTACT C/L (19.3° FROM HORIZONTAL)
DIMENSIONS TO CENTER SIDE CONTACT C/L
"N" = NORTH
"S" = SOUTH

NOTICE OF PROPRIETARY PROPERTY:
THE INFORMATION CONTAINED HEREIN IS THE PROPRIETARY PROPERTY OF APPLE INC. THE POSSESSOR AGREES TO THE FOLLOWING:
(i) TO MAINTAIN THIS DOCUMENT IN CONFIDENCE
(ii) NOT TO REPRODUCE OR COPY IT
(iii) NOT TO REVEAL OR PUBLISH IT IN WHOLE OR PART
(iv) ALL RIGHTS RESERVED

Apple Inc.
SIZE D | DRAWING NUMBER | REV.
SCALE: NONE | SHT 3 OF 3

56.148 iPad mini 4 无线局域网机型

[英语]

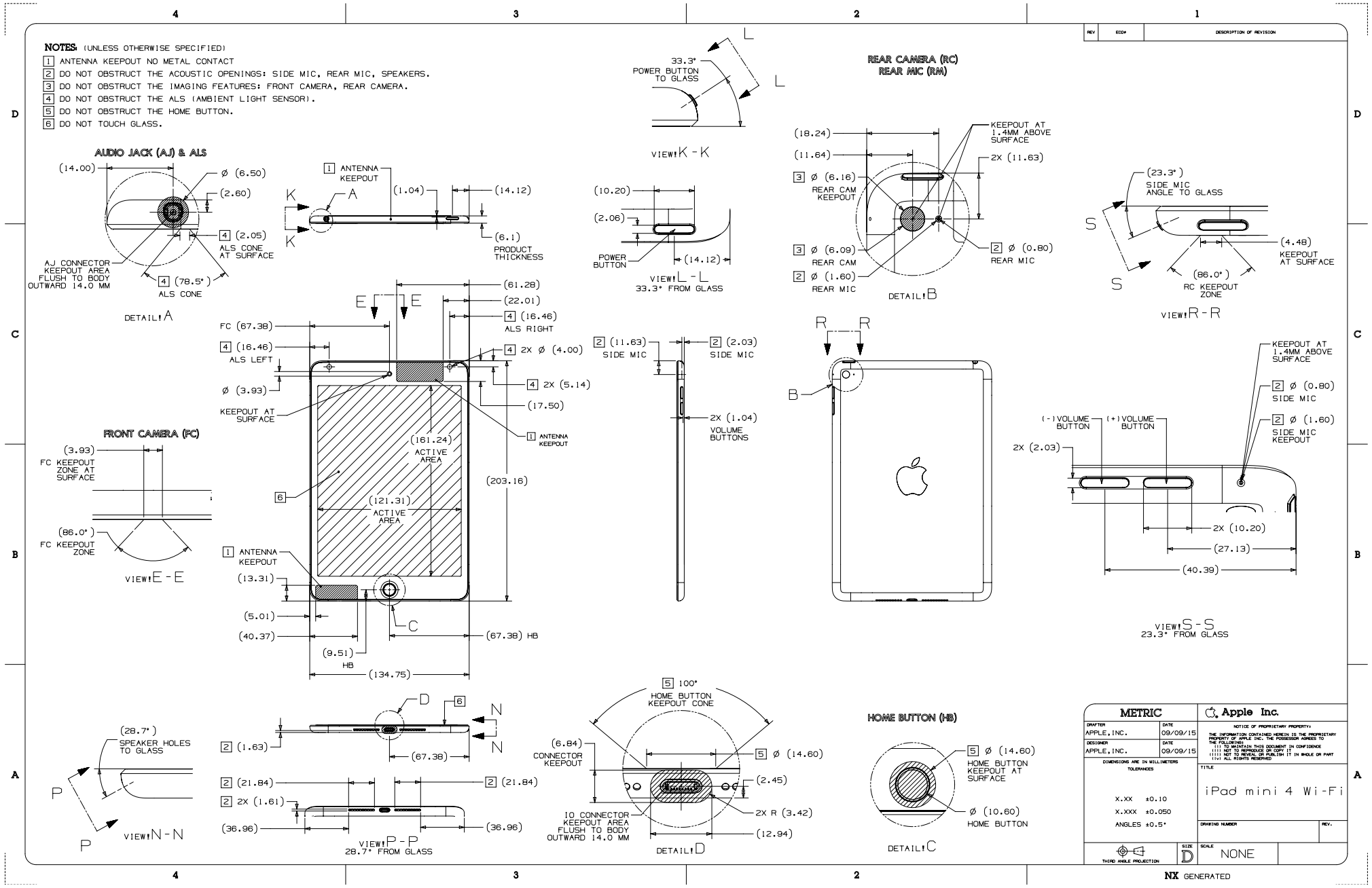

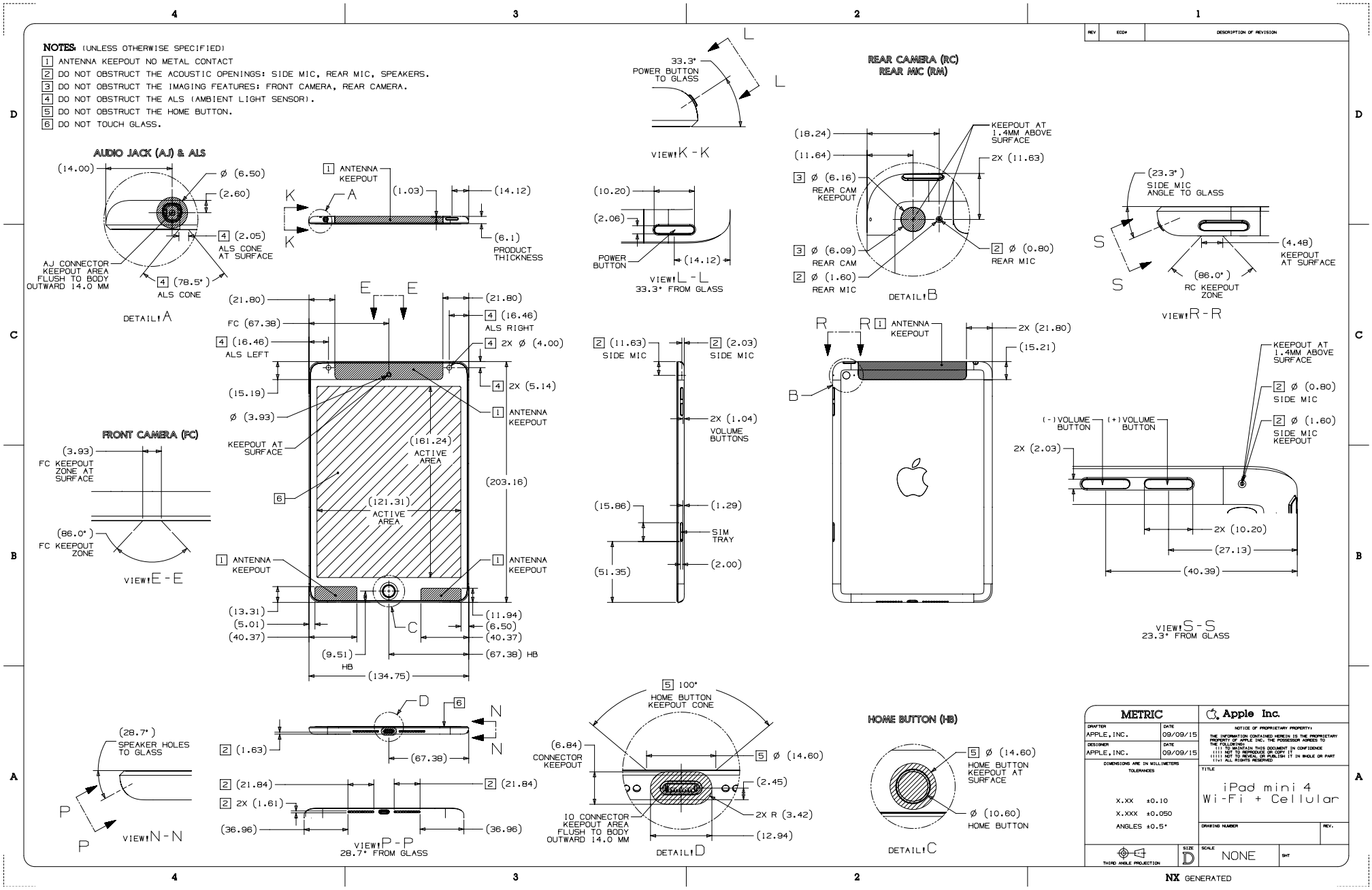
NOTES: (UNLESS OTHERWISE SPECIFIED)
1 ANTENNA KEEPOUT NO METAL CONTACT
2 DO NOT OBSTRUCT THE ACOUSTIC OPENINGS: SIDE MIC, REAR MIC, SPEAKERS.
3 DO NOT OBSTRUCT THE IMAGING FEATURES: FRONT CAMERA, REAR CAMERA.
4 DO NOT OBSTRUCT THE ALS (AMBIENT LIGHT SENSOR).
5 DO NOT OBSTRUCT THE HOME BUTTON.
6 DO NOT TOUCH GLASS.
AUDIO JACK (AJ) & ALS
DETAIL A
FRONT CAMERA (FC)
VIEW E-E
VIEW K-K
VIEW L-L
33.3° FROM GLASS
REAR CAMERA (RC)
REAR MIC (RM)
DETAIL B
VIEW R-R
VIEW S-S
23.3° FROM GLASS
VIEW N-N
VIEW P-P
28.7° FROM GLASS
DETAIL D
HOME BUTTON (HB)
DETAIL C
METRIC
Apple Inc.
APPLE, INC.
09/09/15
iPad mini 4
Wi-Fi + Cellular
NONE
NX GENERATED

56.150 iPad mini 4 磁体/霍尔效应传感器

[英语]

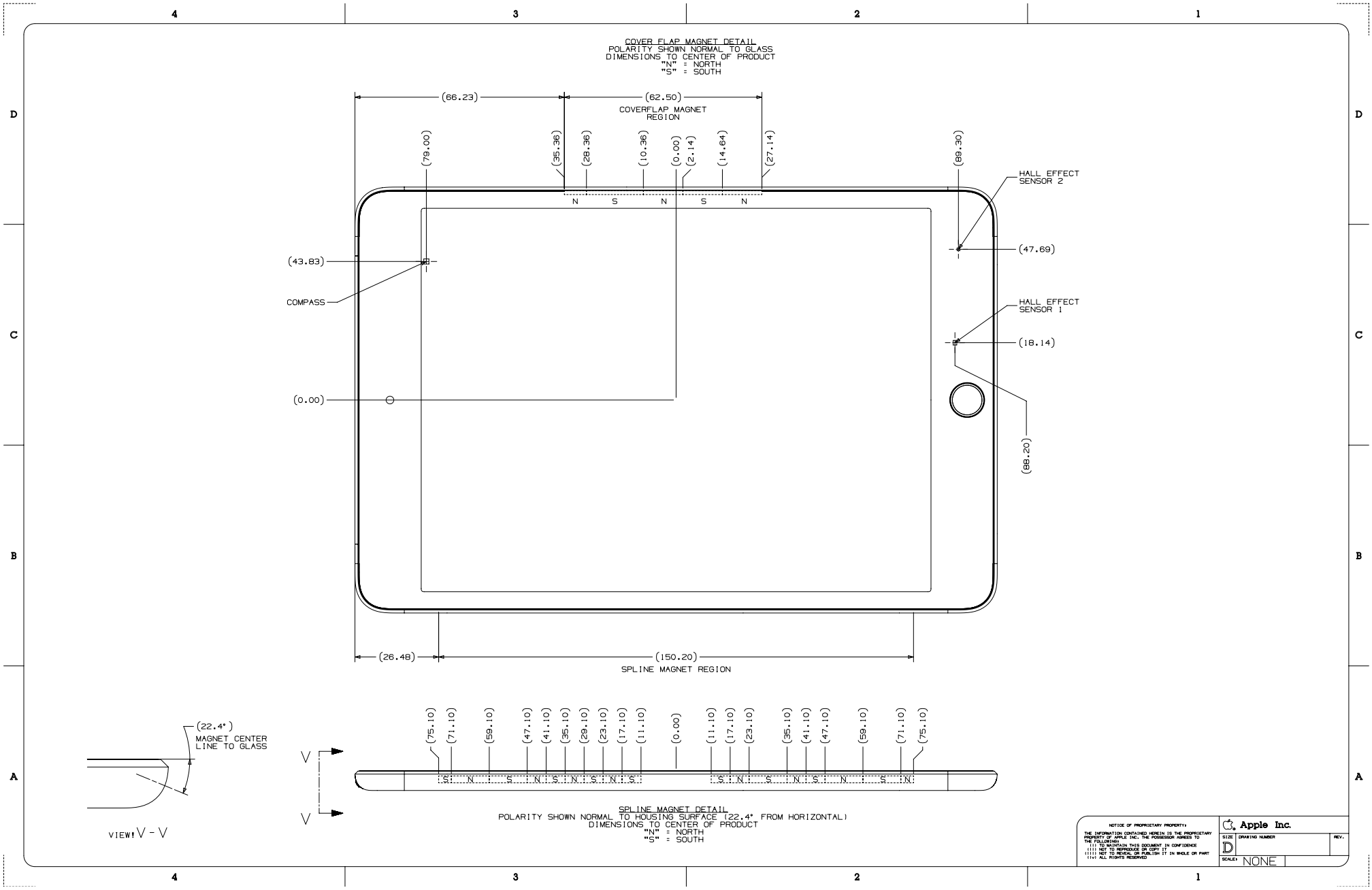

56.151 iPad Air 2 无线局域网机型

[英语]

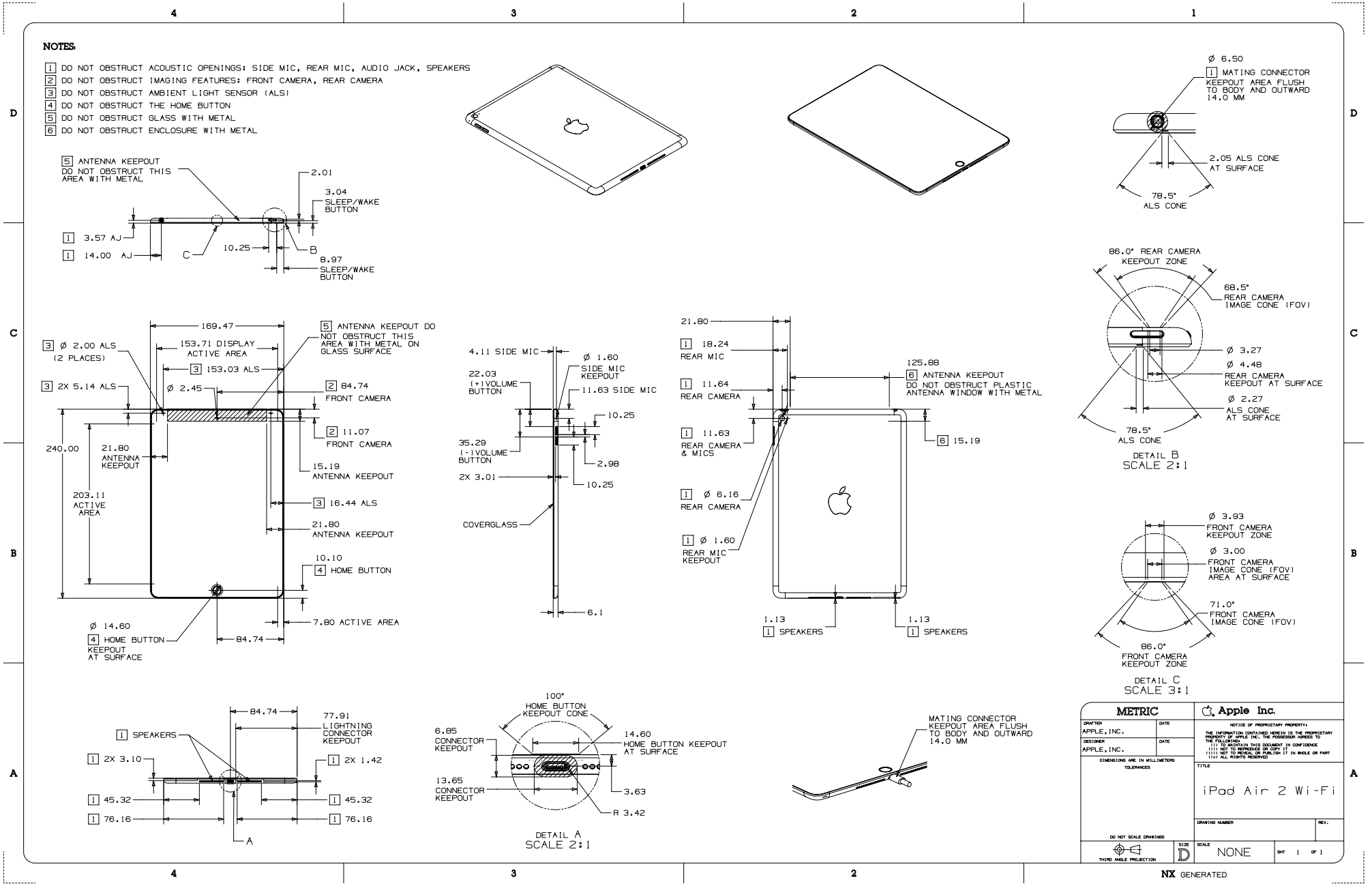

56.152 iPad Air 2 无线局域网 + 蜂窝网络机型

[英语]

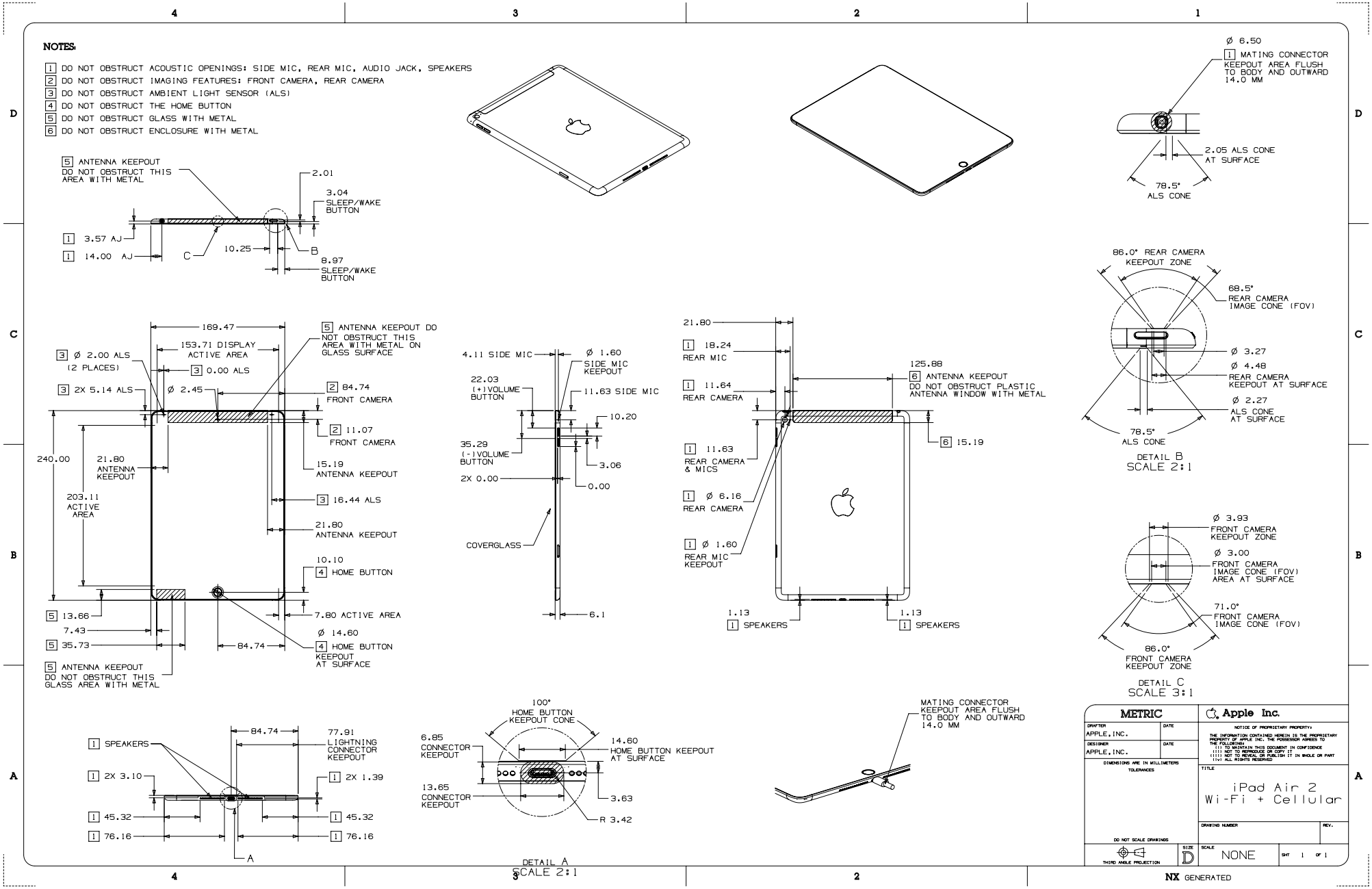

56.153 iPad mini 2 和 iPad mini 3 无线局域网机型

[英语]

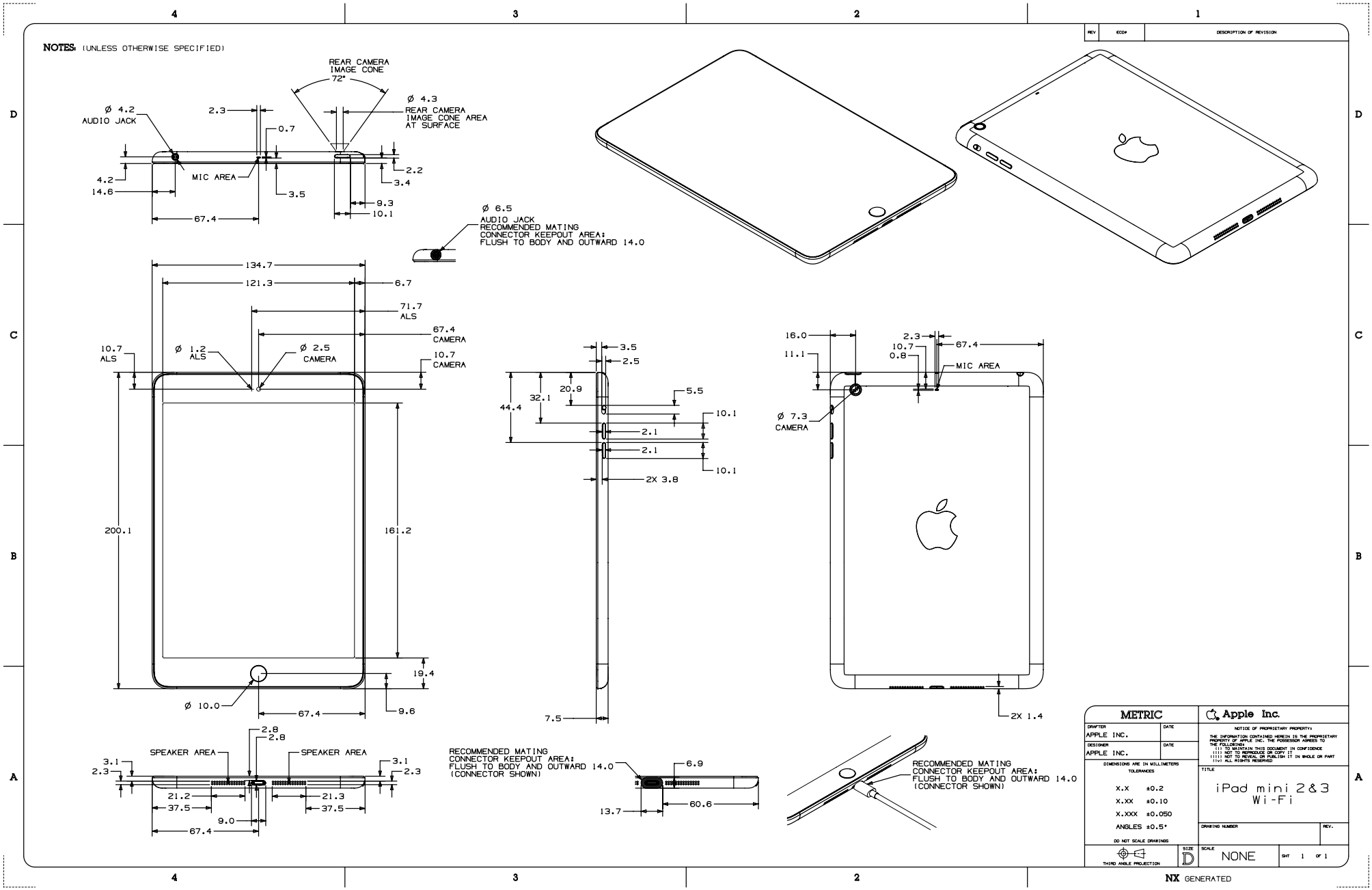

56.154 iPad mini 2 和 iPad mini 3 无线局域网 + 蜂窝网络机型

[英语]

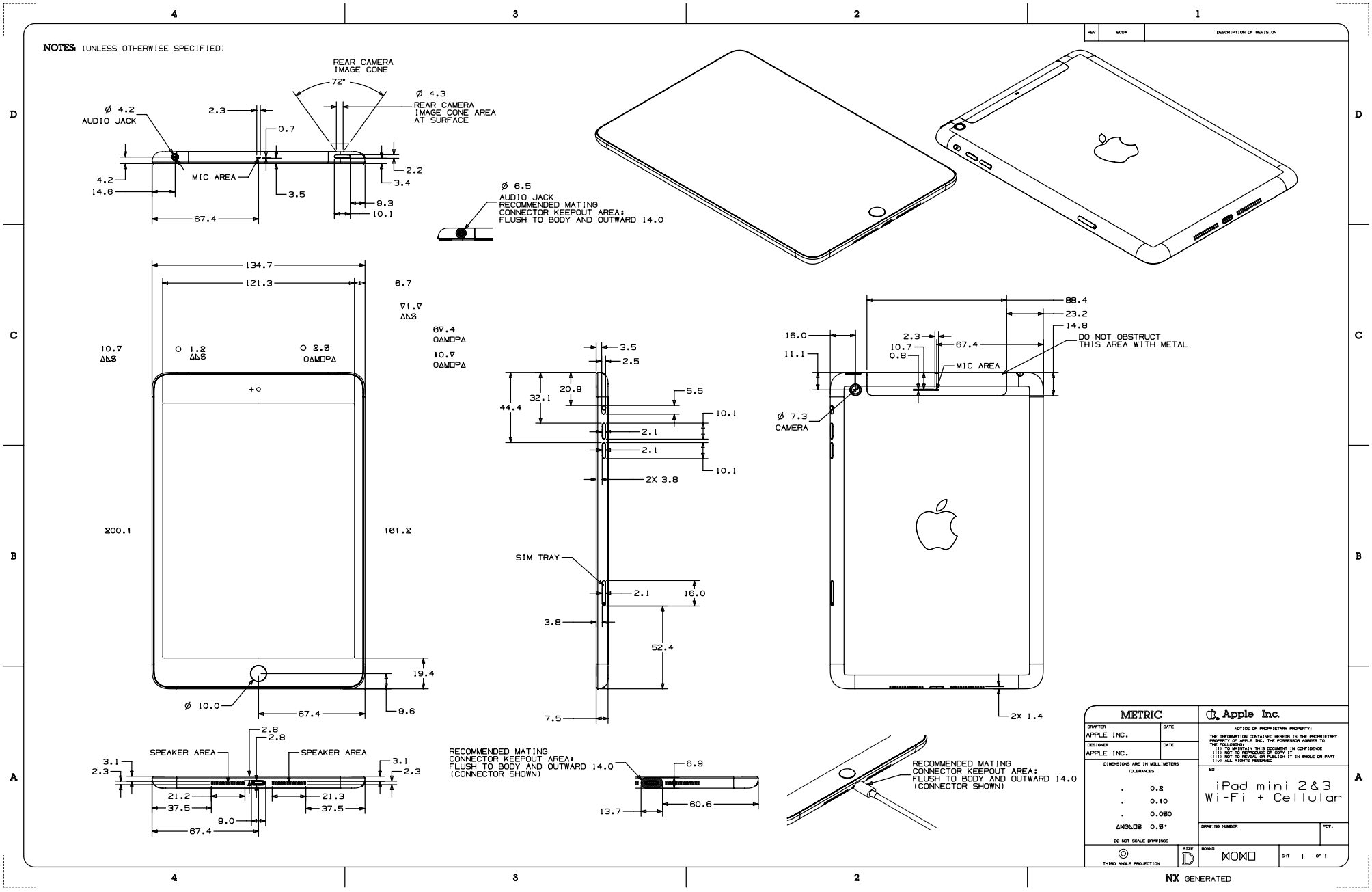

56.155 iPad Air 无线局域网机型

[英语]

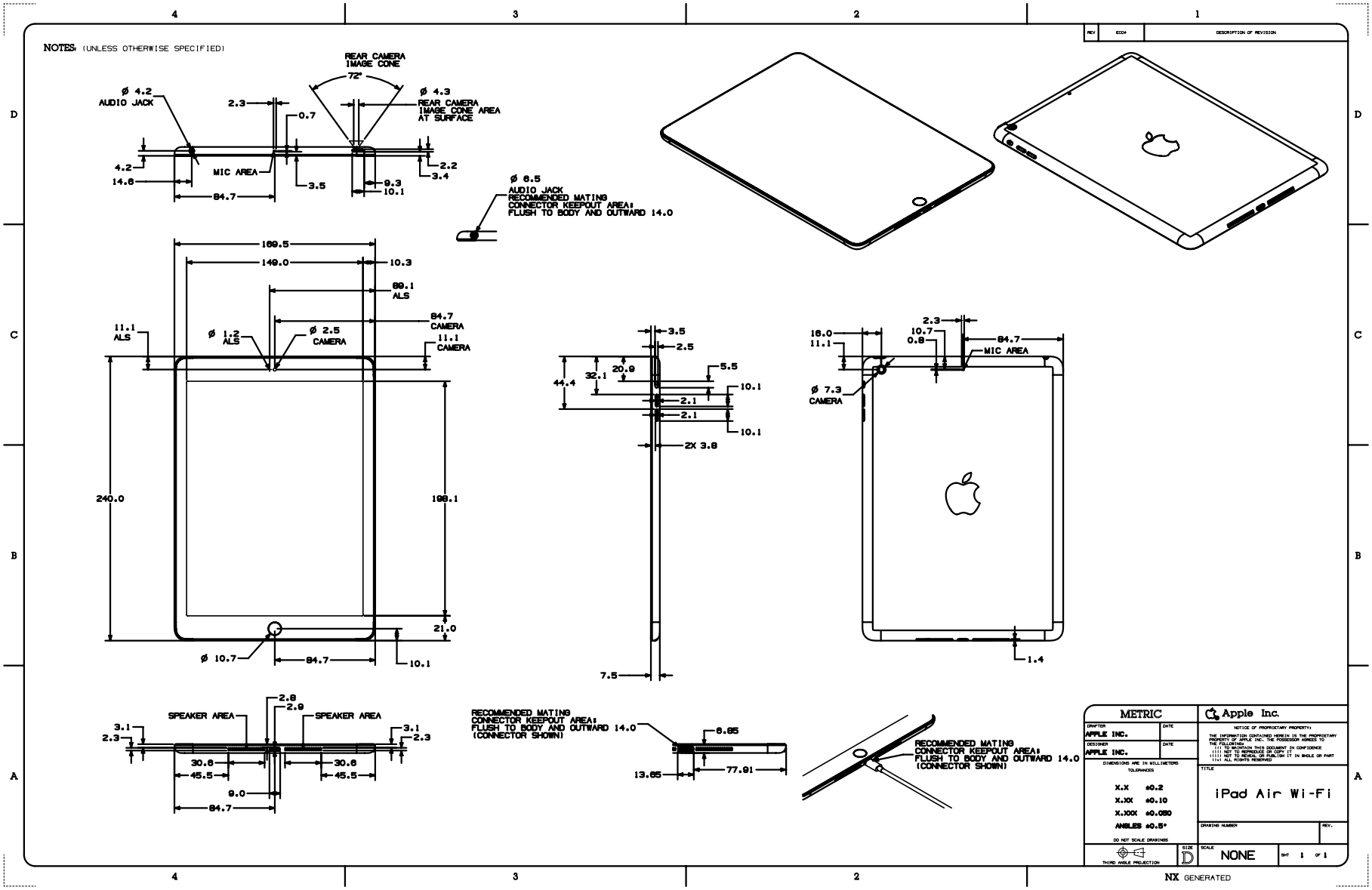

56.156 iPad Air 无线局域网 + 蜂窝网络机型

[英语]

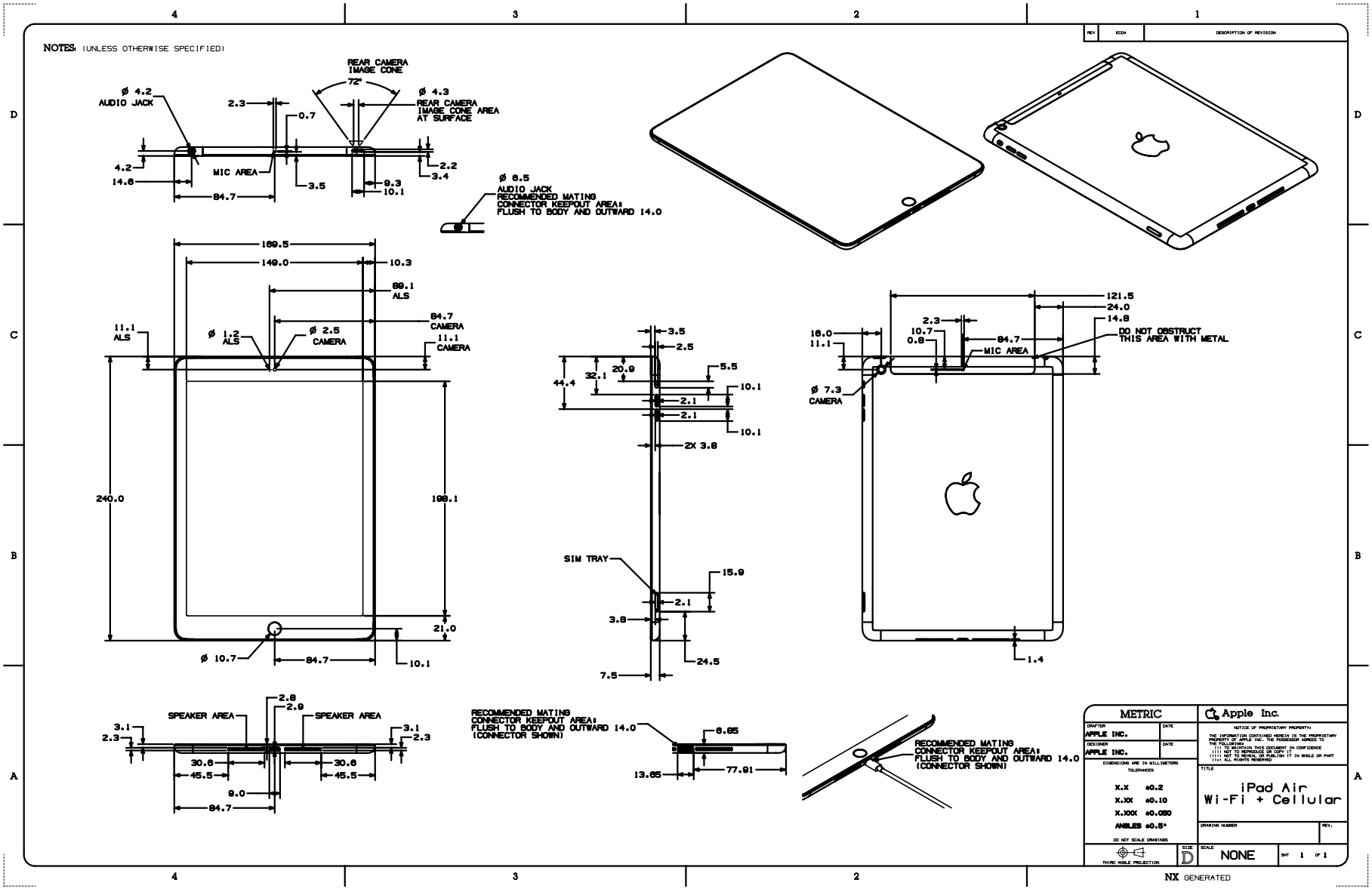

56.157 iPad mini 无线局域网机型

[英语]

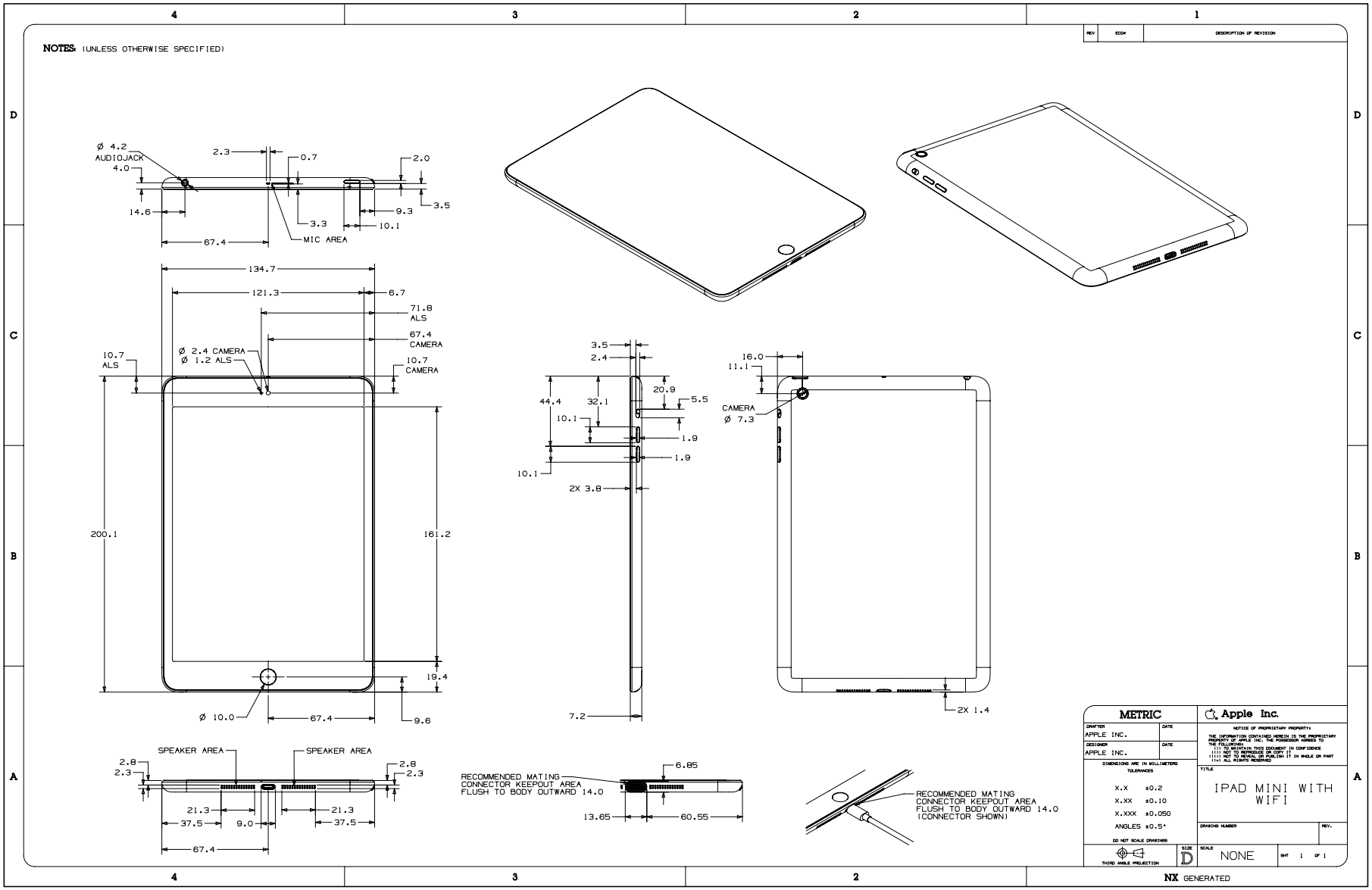

56.158 iPad mini 无线局域网 + 蜂窝网络机型

[英语]

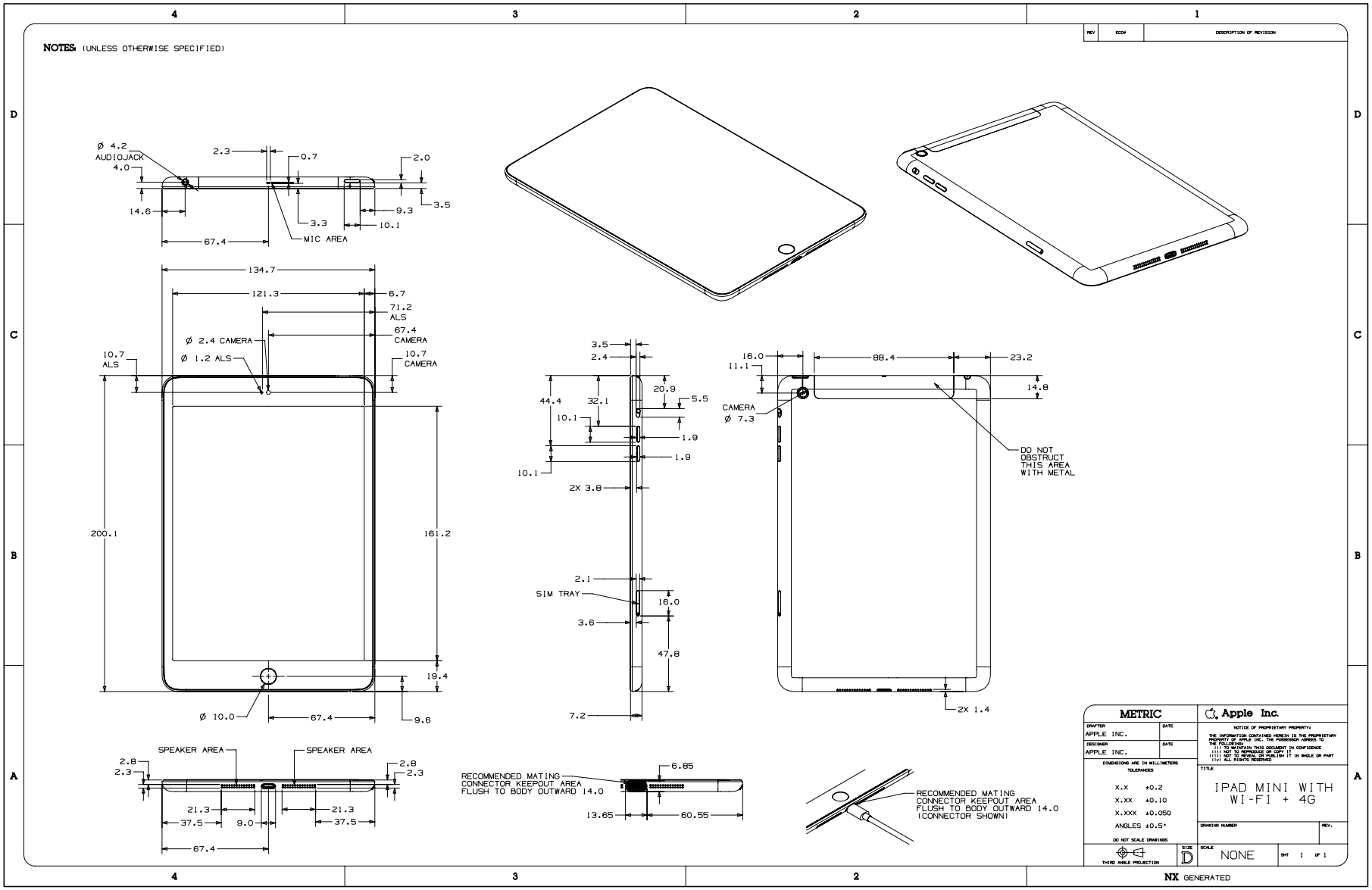

56.159 iPad（第 4 代）无线局域网机型

[英语]

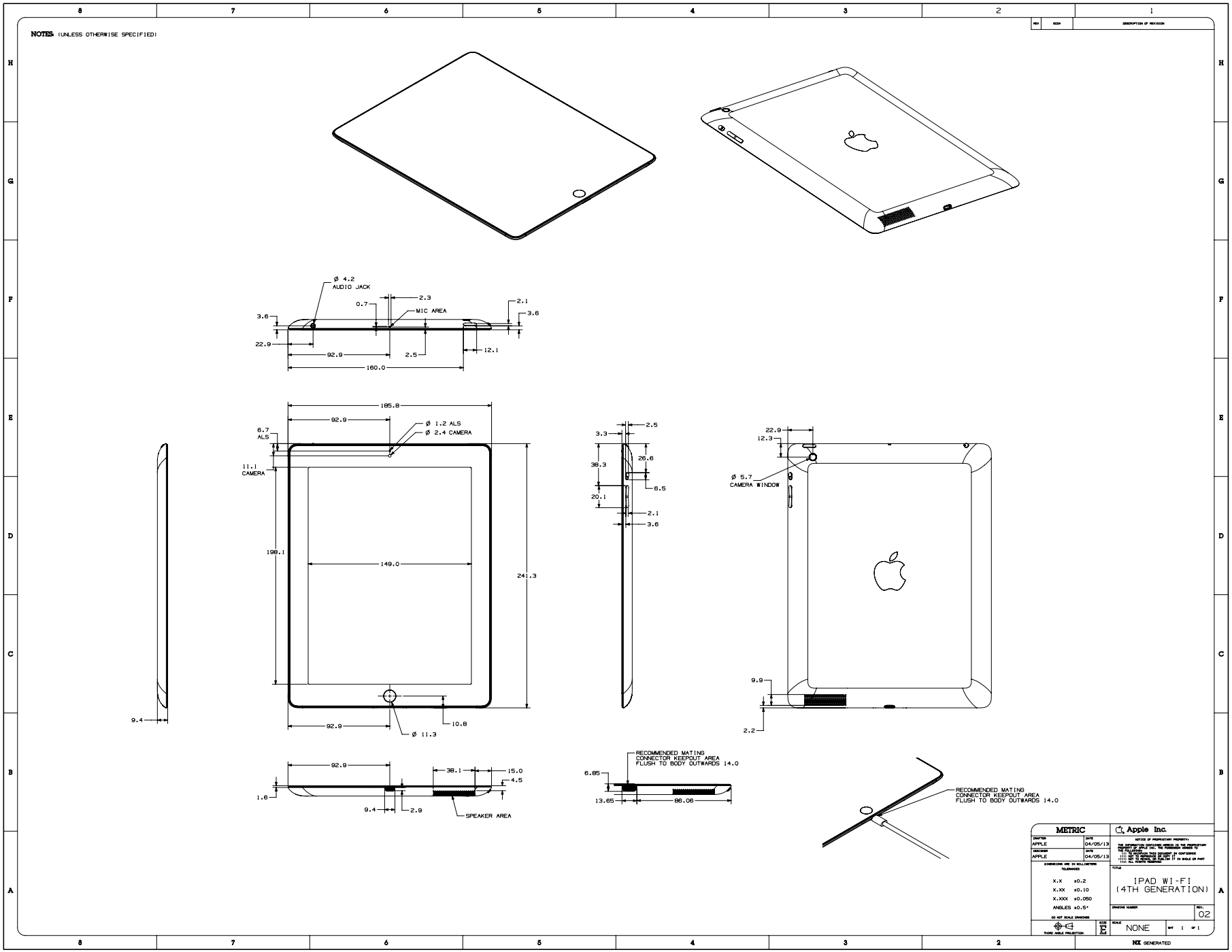

56.160 iPad（第 4 代）无线局域网 + 蜂窝网络机型

[英语]

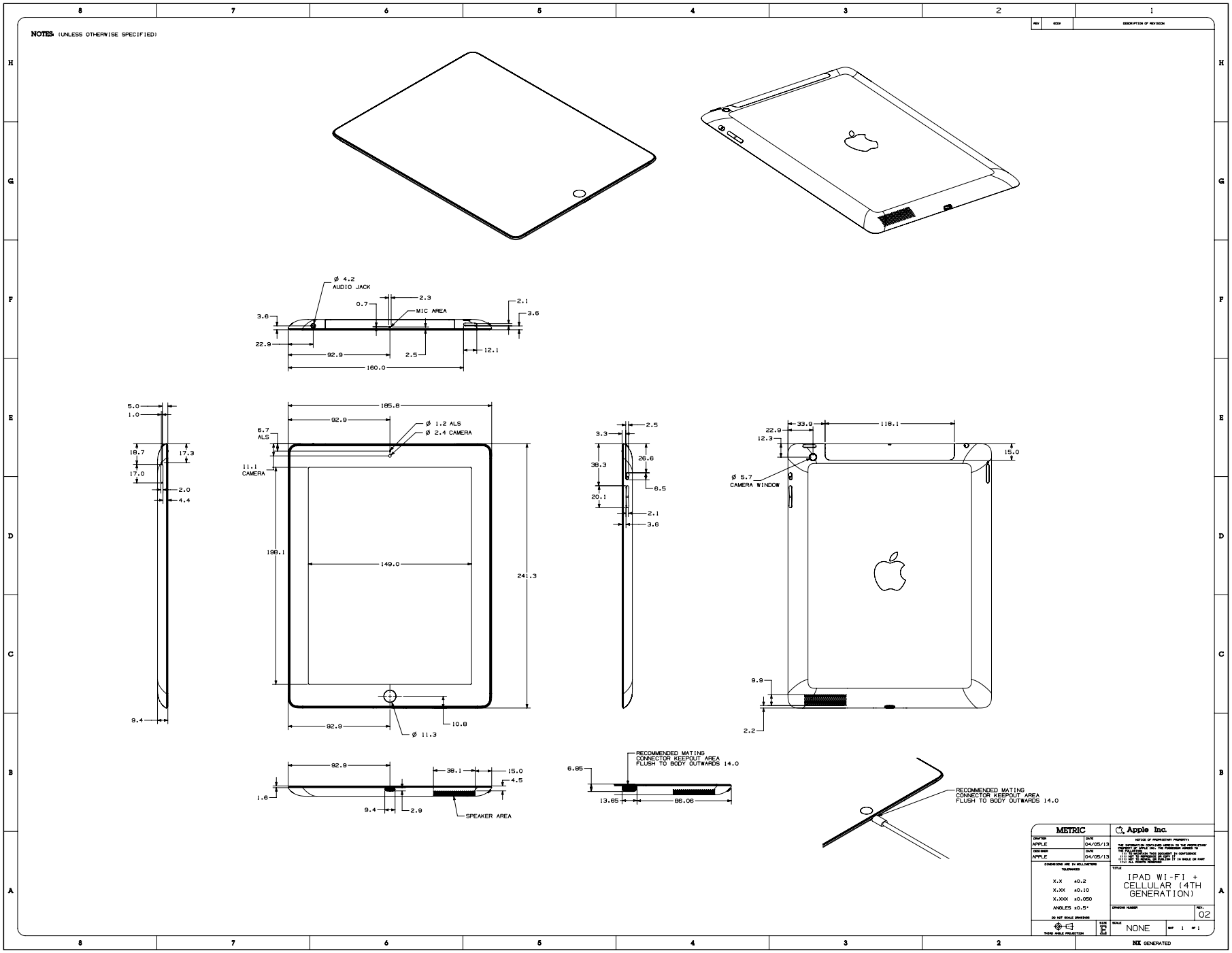

56.161 iPod touch（第 6 代）和 iPod touch（第 7 代）

[英语]

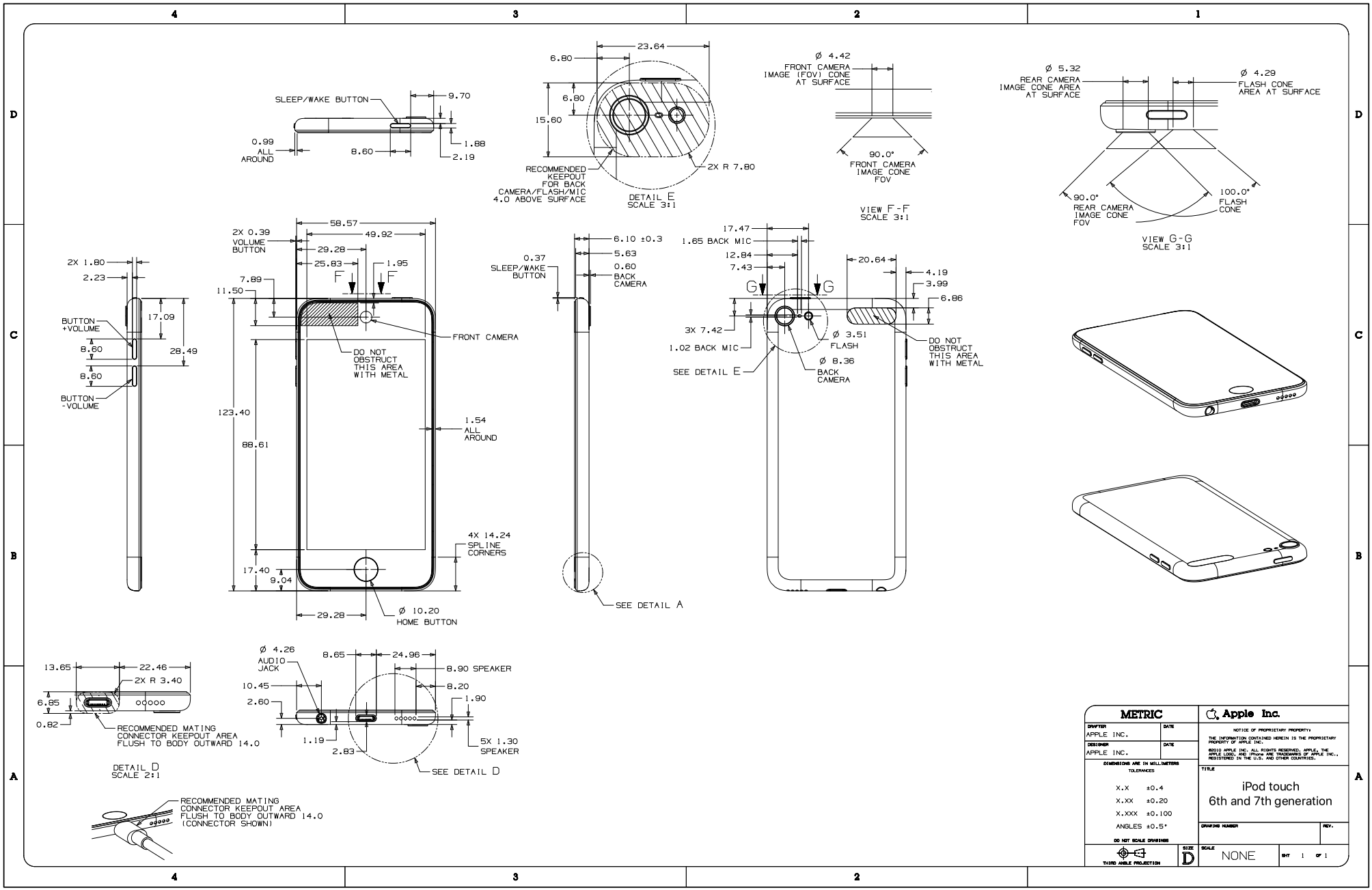

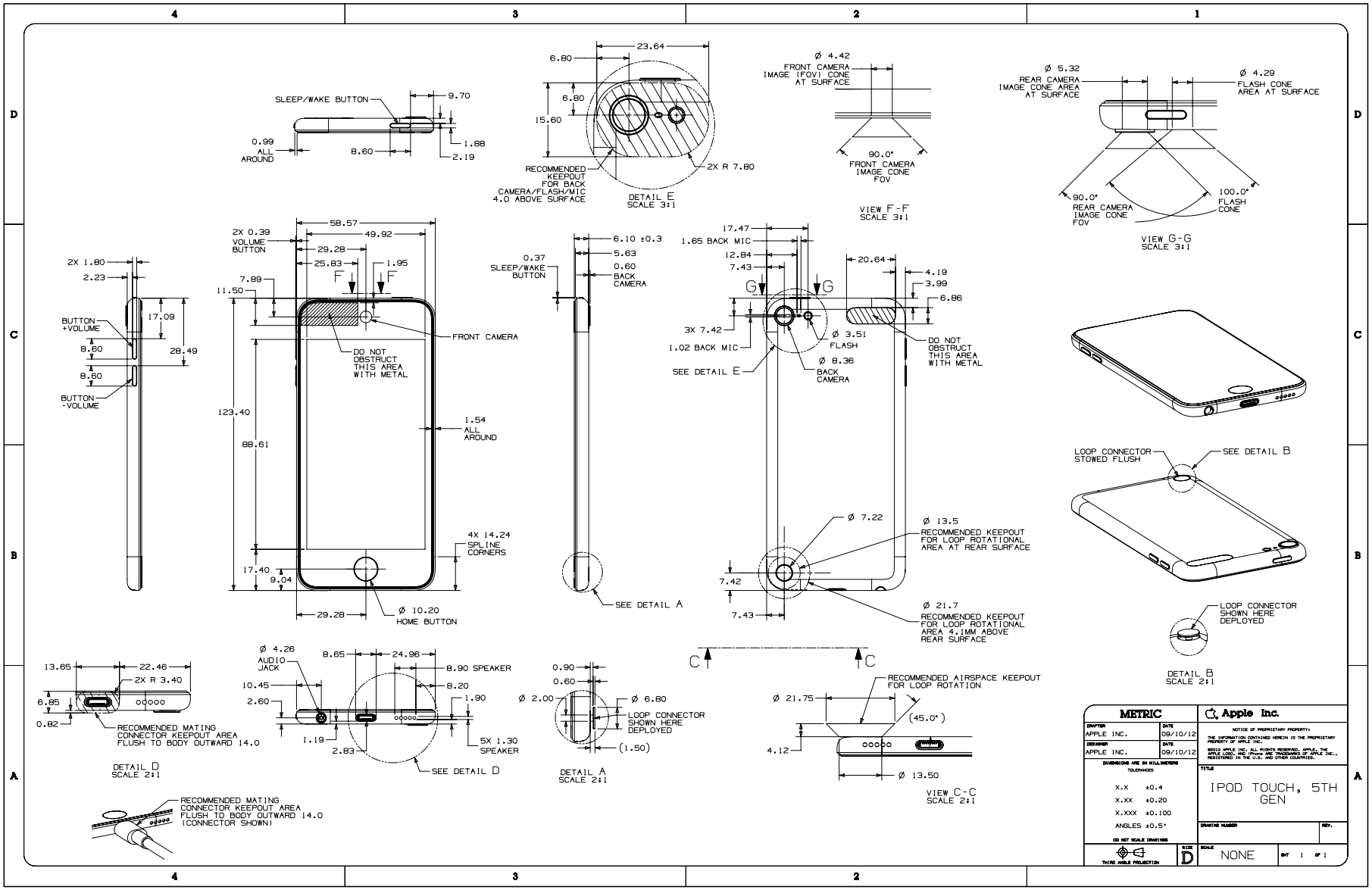
SLEEP/WAKE BUTTON
9.70
0.99 ALL AROUND
8.60
1.88
2.19
23.64
6.80
6.80
15.60
RECOMMENDED KEEPOUT FOR BACK CAMERA/FLASH/MIC 4.0 ABOVE SURFACE
2X R 7.80
DETAIL E SCALE 3:1
Ø 4.42
FRONT CAMERA IMAGE (FOV) CONE AT SURFACE
90.0° FRONT CAMERA IMAGE CONE FOV
VIEW F-F SCALE 3:1
Ø 5.32
REAR CAMERA IMAGE CONE AREA AT SURFACE
Ø 4.29
FLASH CONE AREA AT SURFACE
90.0° REAR CAMERA IMAGE CONE FOV
100.0° FLASH CONE
VIEW G-G SCALE 3:1
2X 1.80
2.23
BUTTON +VOLUME
17.09
8.60
28.49
8.60
BUTTON -VOLUME
2X 0.39 VOLUME BUTTON
58.57
49.92
29.28
25.83
1.95
7.89
11.50
F
F
FRONT CAMERA
DO NOT OBSTRUCT THIS AREA WITH METAL
123.40
88.61
1.54 ALL AROUND
4X 14.24 SPLINE CORNERS
17.40
9.04
29.28
Ø 10.20 HOME BUTTON
0.37 SLEEP/WAKE BUTTON
6.10 ±0.3
5.63
0.60 BACK CAMERA
SEE DETAIL A
17.47
1.65 BACK MIC
12.84
7.43
20.64
4.19
3.99
6.86
G
G
3X 7.42
1.02 BACK MIC
SEE DETAIL E
Ø 3.51 FLASH
Ø 8.36 BACK CAMERA
DO NOT OBSTRUCT THIS AREA WITH METAL
Ø 7.22
Ø 13.5 RECOMMENDED KEEPOUT FOR LOOP ROTATIONAL AREA AT REAR SURFACE
7.42
7.43
Ø 21.7 RECOMMENDED KEEPOUT FOR LOOP ROTATIONAL AREA 4.1MM ABOVE REAR SURFACE
LOOP CONNECTOR STOWED FLUSH
SEE DETAIL B
LOOP CONNECTOR SHOWN HERE DEPLOYED
DETAIL B SCALE 2:1
13.65
22.46
2X R 3.40
6.85
0.82
RECOMMENDED MATING CONNECTOR KEEPOUT AREA FLUSH TO BODY OUTWARD 14.0
DETAIL D SCALE 2:1
Ø 4.26
AUDIO JACK
8.65
24.96
8.90 SPEAKER
10.45
8.20
2.60
1.90
1.19
2.83
5X 1.30 SPEAKER
SEE DETAIL D
0.90
0.60
Ø 2.00
Ø 6.80
LOOP CONNECTOR SHOWN HERE DEPLOYED
(1.50)
DETAIL A SCALE 2:1
C
C
RECOMMENDED AIRSPACE KEEPOUT FOR LOOP ROTATION
Ø 21.75
(45.0°)
4.12
Ø 13.50
VIEW C-C SCALE 2:1
RECOMMENDED MATING CONNECTOR KEEPOUT AREA FLUSH TO BODY OUTWARD 14.0 (CONNECTOR SHOWN)
METRIC
DRAFTER APPLE INC. 09/10/12
DESIGNER APPLE INC. 09/10/12
DIMENSIONS ARE IN MILLIMETERS
TOLERANCES
X.X ±0.4
X.XX ±0.20
X.XXX ±0.100
ANGLES ±0.5°
DO NOT SCALE DRAWING
THIRD ANGLE PROJECTION
SIZE D
Apple Inc.
NOTICE OF PROPRIETARY PROPERTY
THE INFORMATION CONTAINED HEREIN IS THE PROPRIETARY PROPERTY OF APPLE INC.
©2012 APPLE INC. ALL RIGHTS RESERVED. APPLE, THE APPLE LOGO, AND IPOD ARE TRADEMARKS OF APPLE INC., REGISTERED IN THE U.S. AND OTHER COUNTRIES.
TITLE
IPOD TOUCH, 5TH GEN
DRAWING NUMBER
REV.
SCALE NONE
SHT 1 OF 1

56.163 Apple Watch Ultra 2，1/3

[英语]

NOTES:

1. CASE DOES NOT INTERFERE WITH CLICK OR ROTATION FUNCTION OF DIGITAL CROWN
   CASE DOES NOT APPLY FORCE ON DIGITAL CROWN
   CASE DOES NOT OBSTRUCT FACE OF CROWN
2. CASE DOES NOT OBSTRUCT THE WATCH ACOUSTIC OPENINGS AND ALTIMETER AND MUST NOT DEGRADE ACOUSTIC OR WATER EJECTION PERFORMANCE
3. CASE DOES NOT OBSTRUCT THE WATCH CHARGING INTERFACE
4. CASE DOES NOT OBSTRUCT THE WATCH OPTICAL SENSORS
5. CASE DOES NOT EXTEND INTO WATCH SENSOR WINDOWS
6. CASE DOES NOT CONTACT THE WATCH COVER GLASS
7. CASE DOES NOT CONTACT ELECTRICAL SENSORS
8. CASE DOES NOT INTERFERE WITH CLICK FUNCTION OF BUTTON
9. NO METAL CASES ALLOWED DUE TO ANTENNA FUNCTION
10. CASE DOES NOT CONTAIN FERROMAGNETIC MATERIAL

OVERALL DIMENSIONS AND CALLOUTS

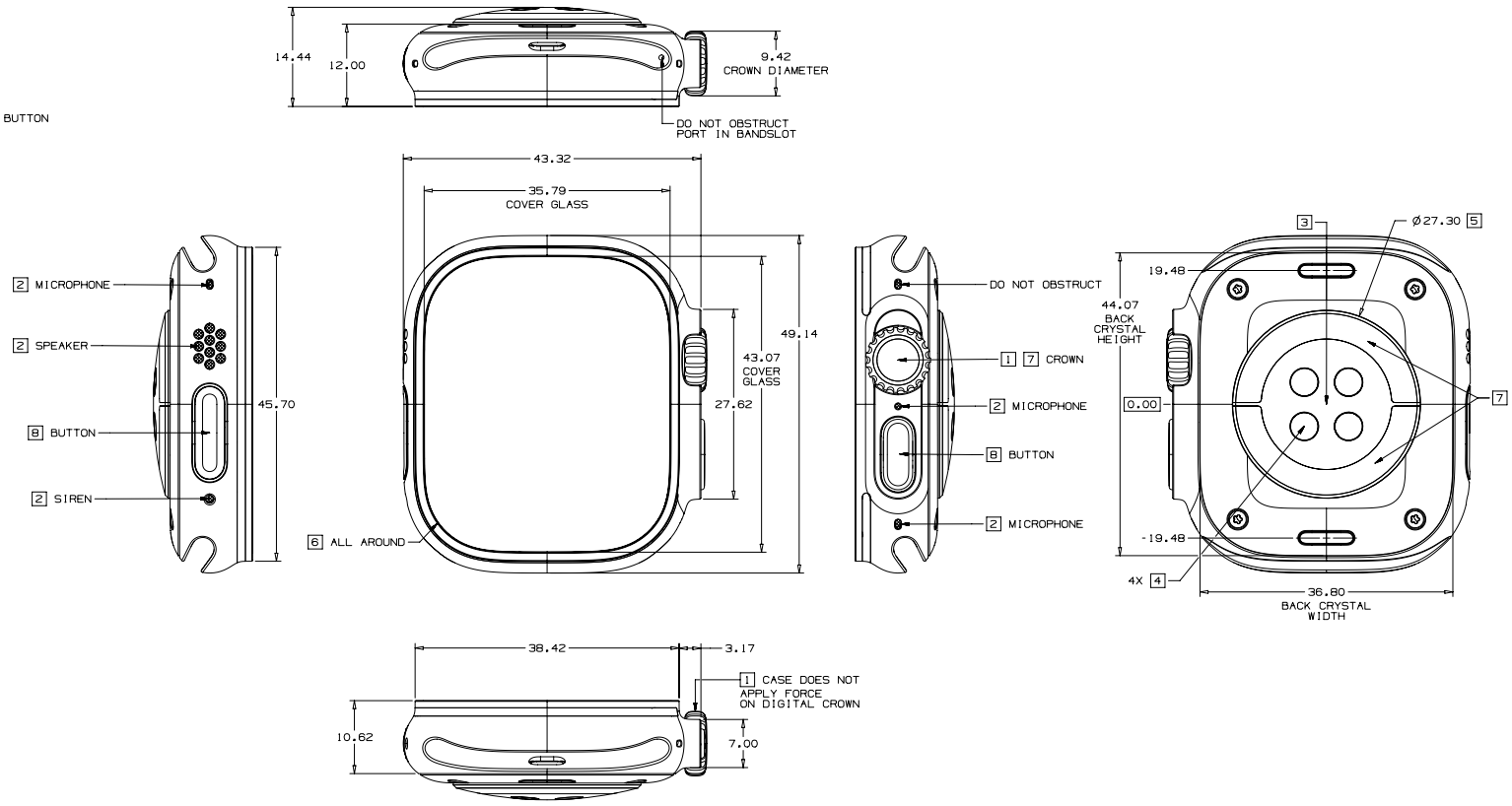

NOTICE OF PROPRIETARY PROPERTY:
THE INFORMATION CONTAINED HEREIN IS THE PROPRIETARY PROPERTY OF APPLE INC. THE POSSESSOR AGREES TO THE FOLLOWING:
(i) TO MAINTAIN THIS DOCUMENT IN CONFIDENCE
(ii) NOT TO REPRODUCE OR COPY IT
(iii) NOT TO REVEAL OR PUBLISH IT IN WHOLE OR PART
(iv) ALL RIGHTS RESERVED

Apple Inc.

SIZE	DRAWING NUMBER	REV.
D	APPLE WATCH ULTRA 2	01

SCALE: NONE SHT 1 OF 3

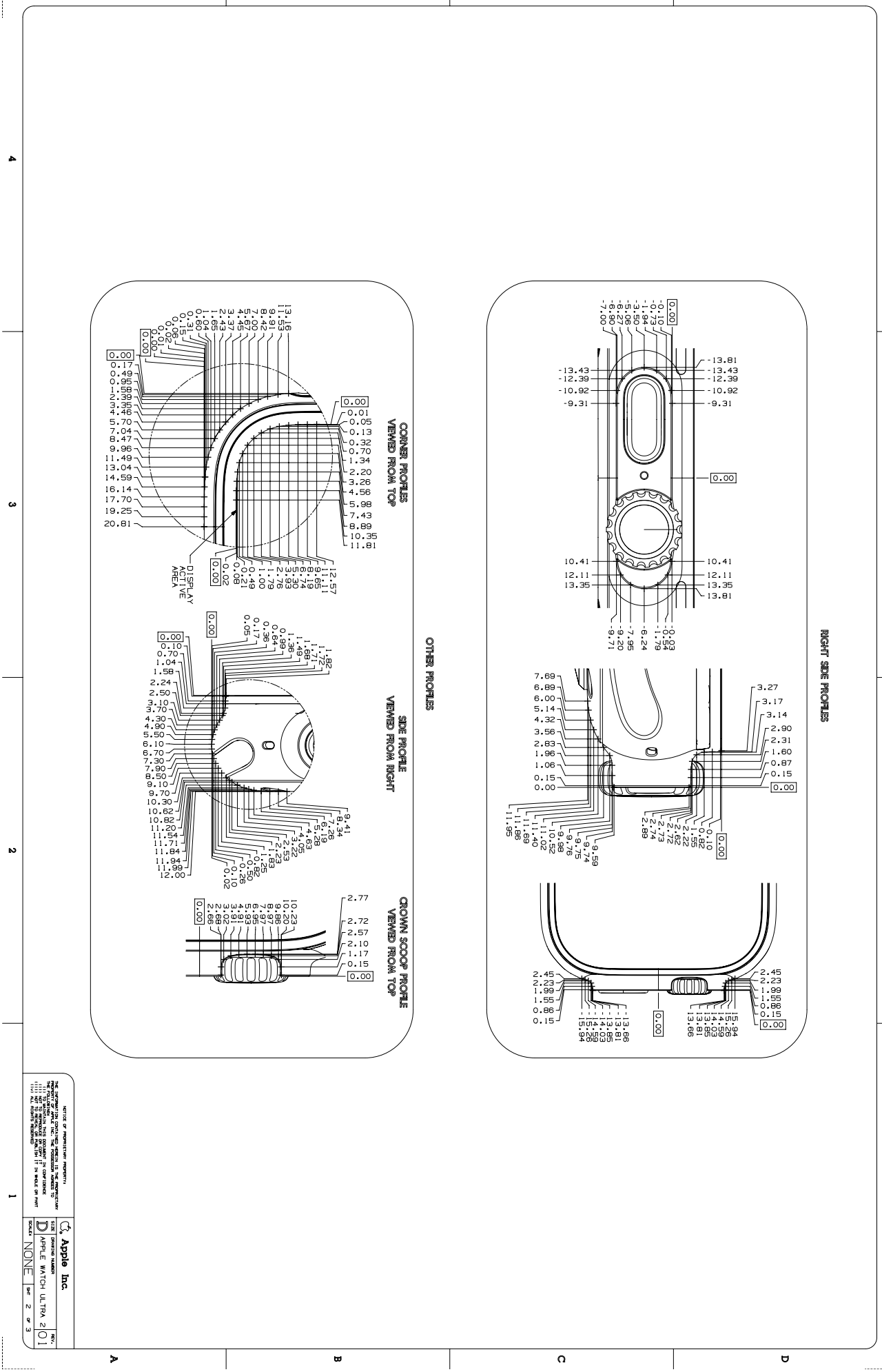

2023/10/10 | 版权所有 © 2023 Apple Inc. 保留所有权利。

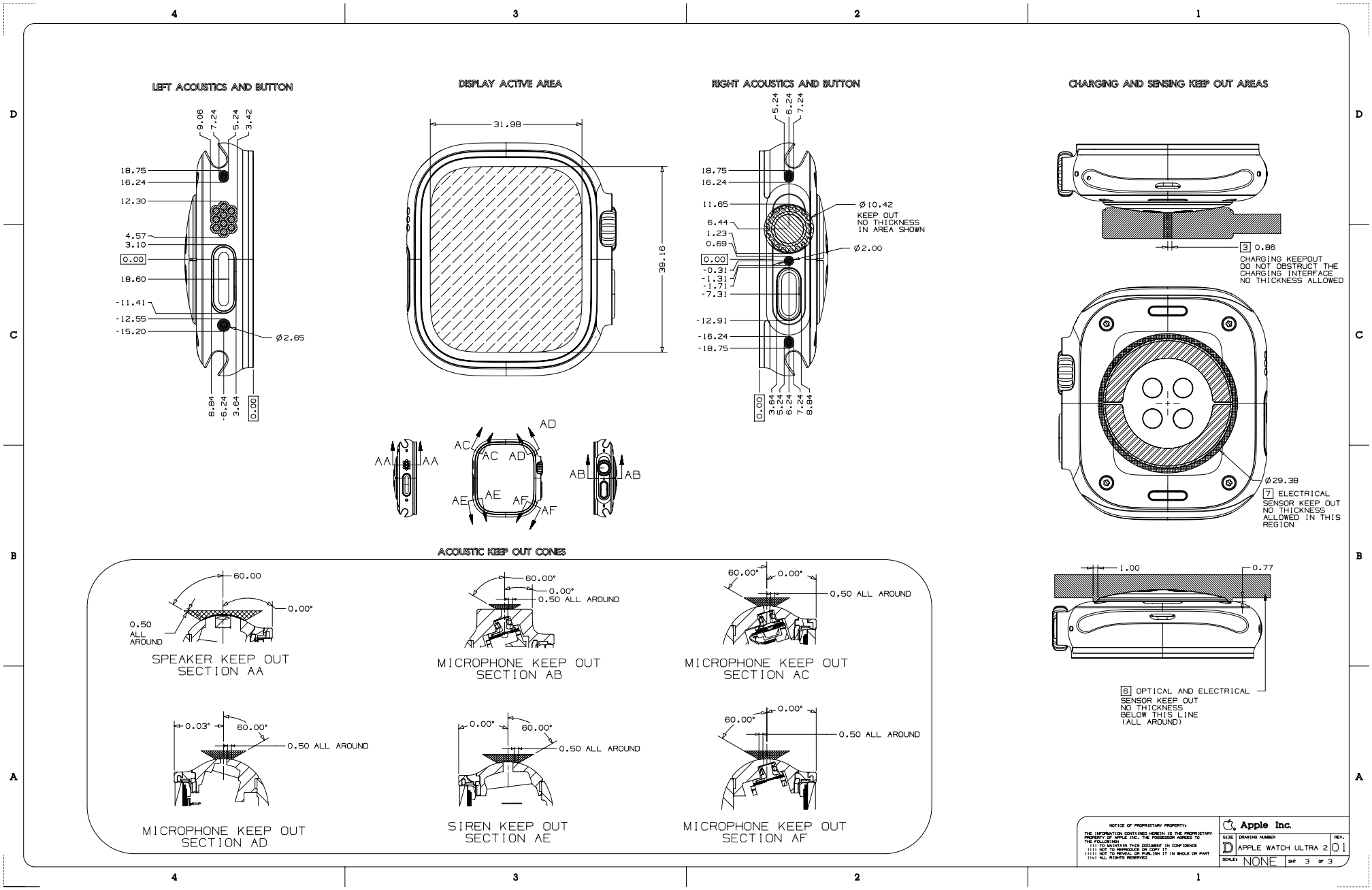
LEFT ACOUSTICS AND BUTTON
DISPLAY ACTIVE AREA
RIGHT ACOUSTICS AND BUTTON
CHARGING AND SENSING KEEP OUT AREAS
ACOUSTIC KEEP OUT CONES
Ø10.42 KEEP OUT NO THICKNESS IN AREA SHOWN
Ø2.00
Ø2.65
31.98
39.16
3 0.86 CHARGING KEEPOUT DO NOT OBSTRUCT THE CHARGING INTERFACE NO THICKNESS ALLOWED
Ø29.38
7 ELECTRICAL SENSOR KEEP OUT NO THICKNESS ALLOWED IN THIS REGION
1.00
0.77
6 OPTICAL AND ELECTRICAL SENSOR KEEP OUT NO THICKNESS BELOW THIS LINE (ALL AROUND)
SPEAKER KEEP OUT SECTION AA
MICROPHONE KEEP OUT SECTION AB
MICROPHONE KEEP OUT SECTION AC
MICROPHONE KEEP OUT SECTION AD
SIREN KEEP OUT SECTION AE
MICROPHONE KEEP OUT SECTION AF
0.50 ALL AROUND
Apple Inc.
APPLE WATCH ULTRA 2
NONE

56.166 Apple Watch Series 9（45 毫米）

[英语]

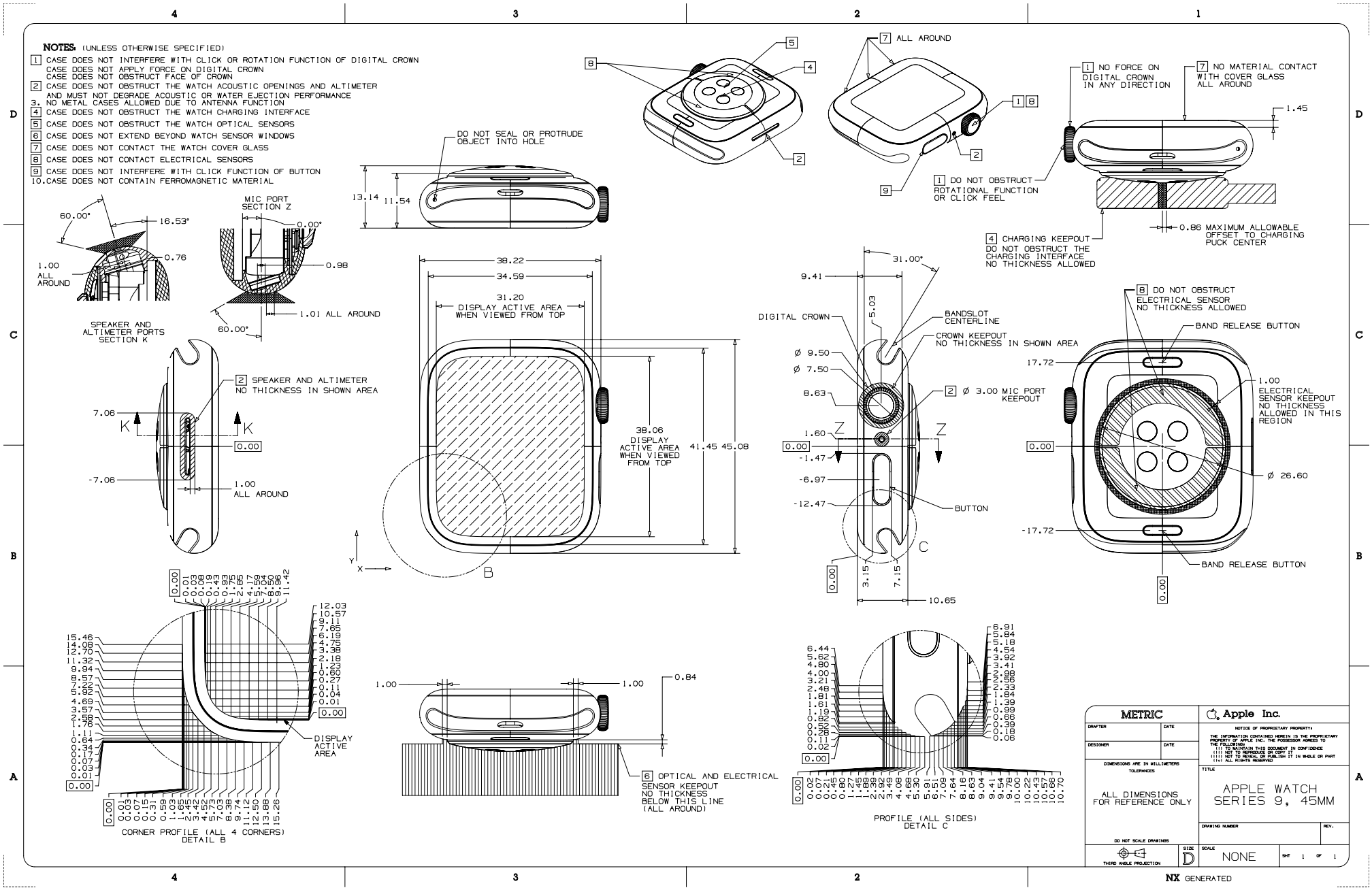

56.167 Apple Watch Series 9（41 毫米）

[英语]

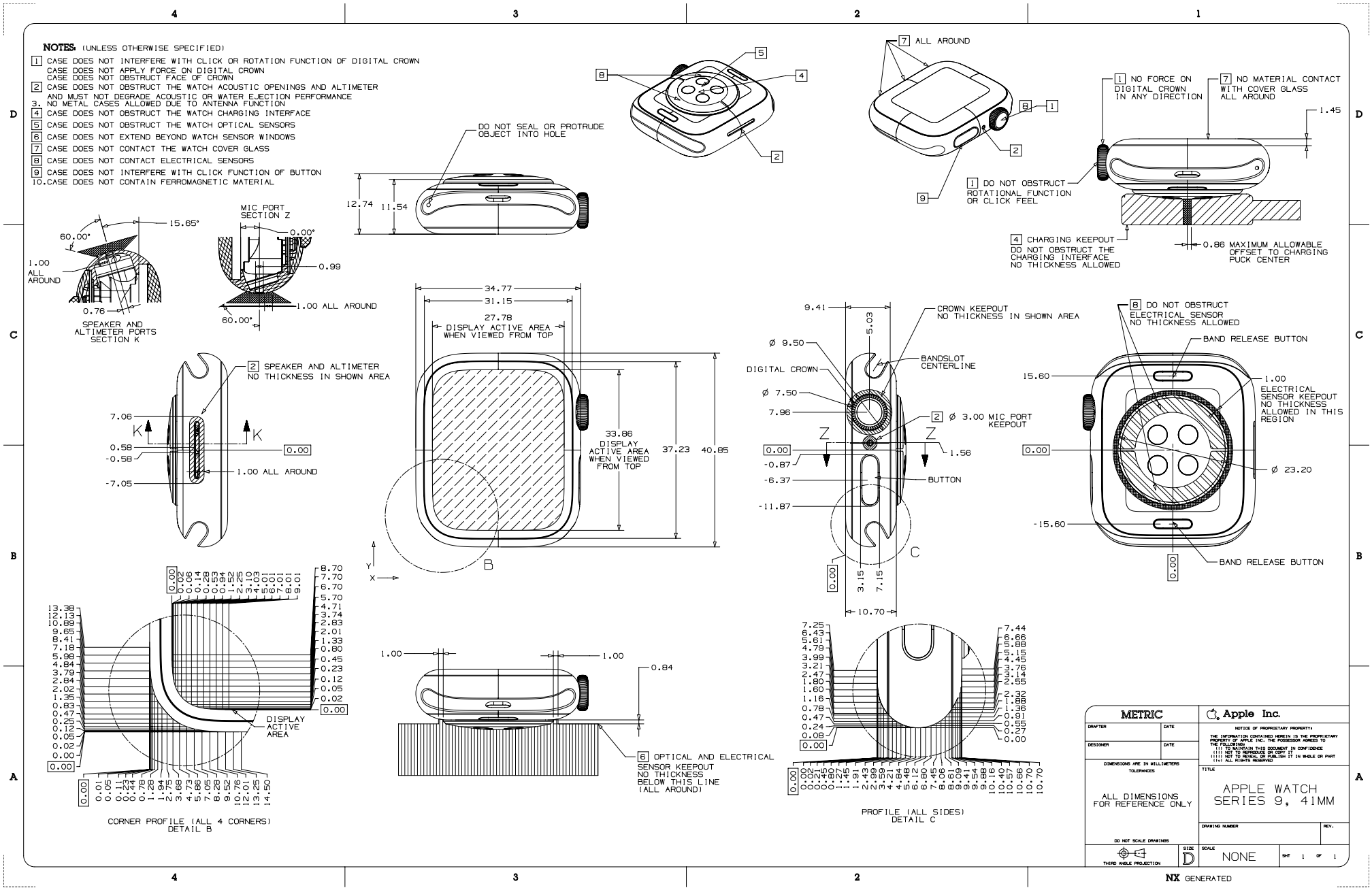

NOTES:

1. CASE DOES NOT INTERFERE WITH CLICK OR ROTATION FUNCTION OF DIGITAL CROWN
   CASE DOES NOT APPLY FORCE ON DIGITAL CROWN
   CASE DOES NOT OBSTRUCT FACE OF CROWN
2. CASE DOES NOT OBSTRUCT THE WATCH ACOUSTIC OPENINGS AND ALTIMETER AND MUST NOT DEGRADE ACOUSTIC OR WATER EJECTION PERFORMANCE
3. CASE DOES NOT OBSTRUCT THE WATCH CHARGING INTERFACE
4. CASE DOES NOT OBSTRUCT THE WATCH OPTICAL SENSORS
5. CASE DOES NOT EXTEND INTO WATCH SENSOR WINDOWS
6. CASE DOES NOT CONTACT THE WATCH COVER GLASS
7. CASE DOES NOT CONTACT ELECTRICAL SENSORS
8. CASE DOES NOT INTERFERE WITH CLICK FUNCTION OF BUTTON
9. NO METAL CASES ALLOWED DUE TO ANTENNA FUNCTION
10. CASE DOES NOT CONTAIN FERROMAGNETIC MATERIAL

OVERALL DIMENSIONS AND CALLOUTS

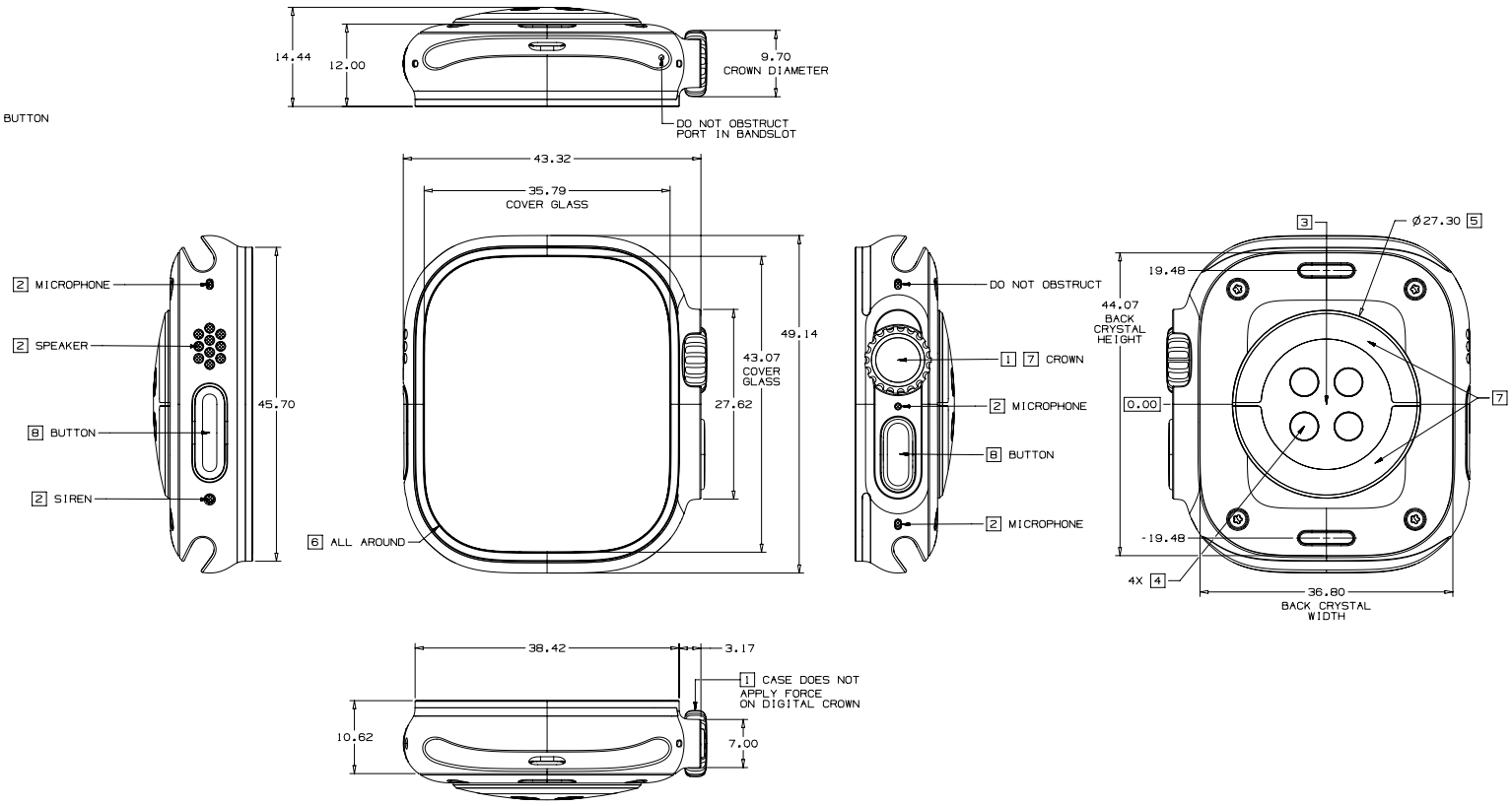

NOTICE OF PROPRIETARY PROPERTY:
THE INFORMATION CONTAINED HEREIN IS THE PROPRIETARY PROPERTY OF APPLE INC. THE POSSESSOR AGREES TO THE FOLLOWING:
(i) TO MAINTAIN THIS DOCUMENT IN CONFIDENCE
(ii) NOT TO REPRODUCE OR COPY IT
(iii) NOT TO REVEAL OR PUBLISH IT IN WHOLE OR PART
(iv) ALL RIGHTS RESERVED

Apple Inc.
SIZE D | DRAWING NUMBER APPLE WATCH ULTRA | REV. 01
SCALE: NONE | SHT 1 OF 3

56.169 Apple Watch Ultra，2/3

[英语]

RIGHT SIDE PROFILES

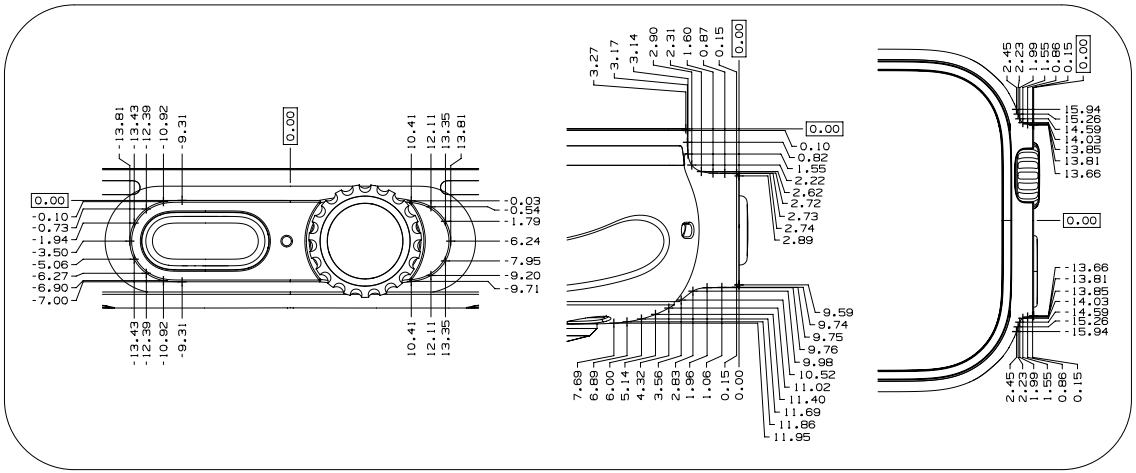

OTHER PROFILES

CORNER PROFILES
VIEWED FROM TOP

SIDE PROFILE
VIEWED FROM RIGHT

CROWN SCOOP PROFILE
VIEWED FROM TOP

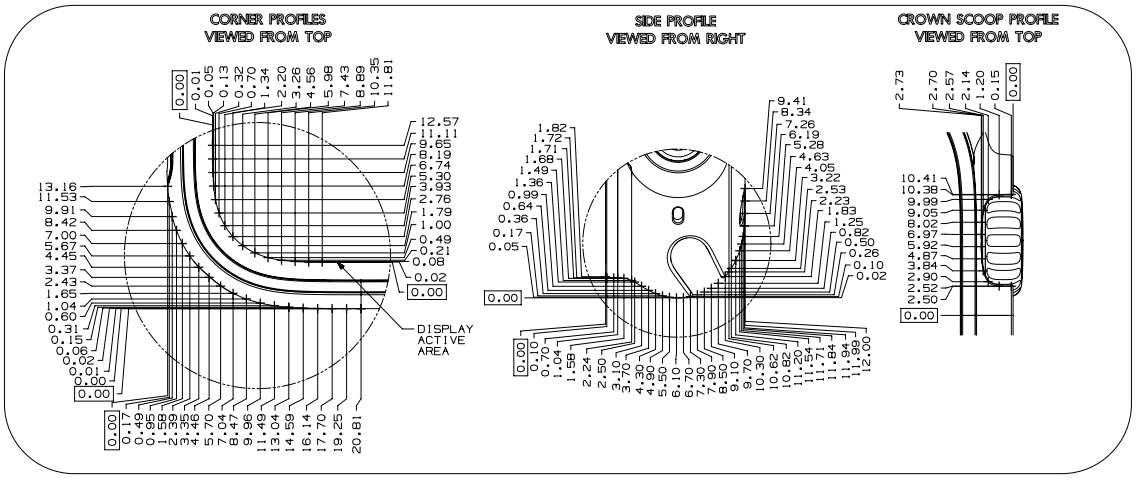

NOTICE OF PROPRIETARY PROPERTY:
THE INFORMATION CONTAINED HEREIN IS THE PROPRIETARY PROPERTY OF APPLE INC. THE POSSESSOR AGREES TO THE FOLLOWING:
(i) TO MAINTAIN THIS DOCUMENT IN CONFIDENCE
(ii) NOT TO REPRODUCE OR COPY IT
(iii) NOT TO REVEAL OR PUBLISH IT IN WHOLE OR PART
(iv) ALL RIGHTS RESERVED

Apple Inc.

SIZE	DRAWING NUMBER	REV.
D	APPLE WATCH ULTRA	01

SCALE: NONE SHT 2 OF 3

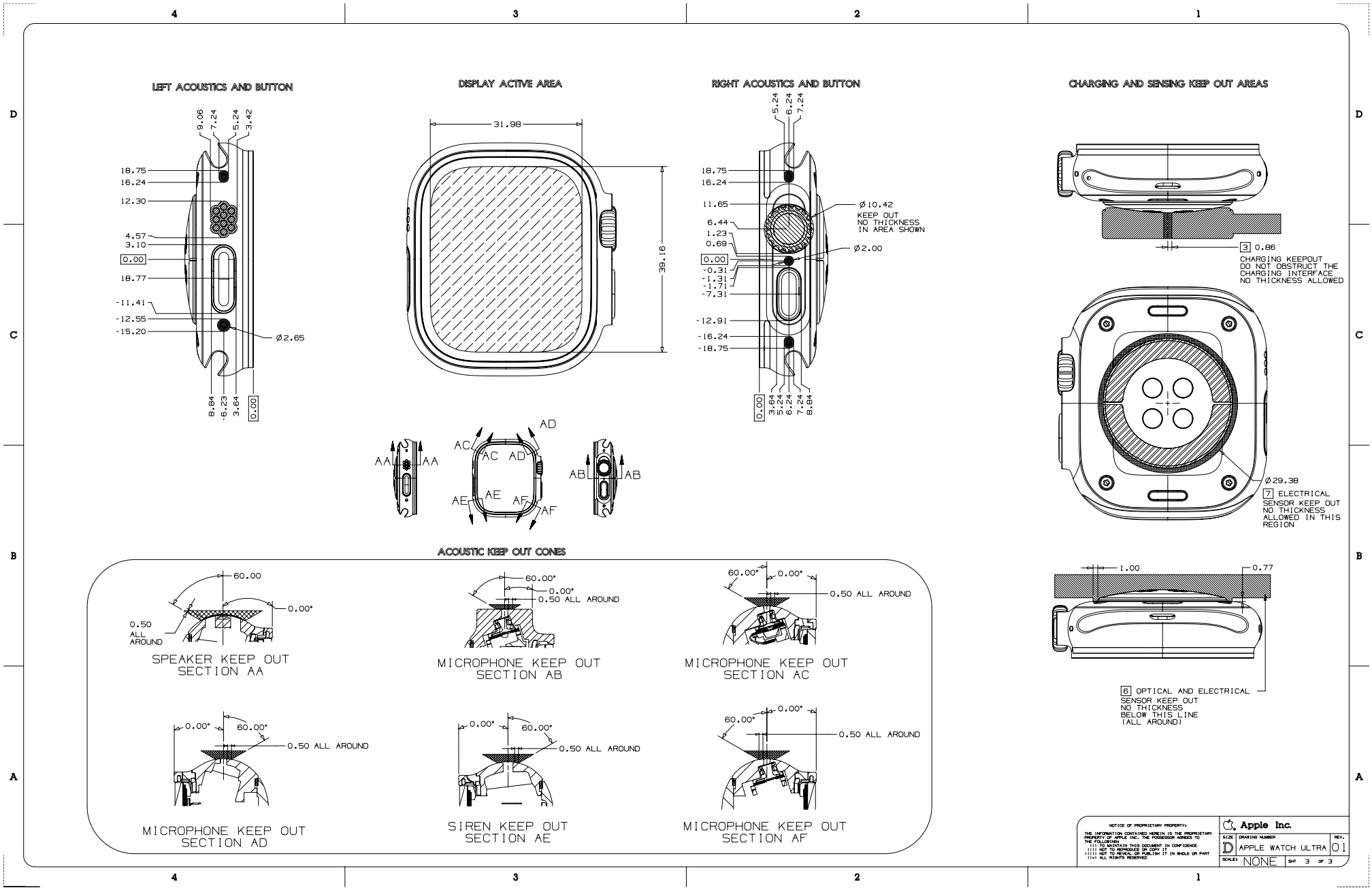
LEFT ACOUSTICS AND BUTTON
9.06
7.24
5.24
3.42
18.75
16.24
12.30
4.57
3.10
0.00
18.77
-11.41
-12.55
-15.20
Ø2.65
8.84
6.23
3.64
0.00
DISPLAY ACTIVE AREA
31.98
39.16
RIGHT ACOUSTICS AND BUTTON
5.24
6.24
7.24
18.75
16.24
11.65
Ø10.42
KEEP OUT
NO THICKNESS
IN AREA SHOWN
6.44
1.23
0.69
Ø2.00
0.00
-0.31
-1.31
-1.71
-7.31
-12.91
-16.24
-18.75
0.00
3.64
5.24
6.24
7.24
8.84
CHARGING AND SENSING KEEP OUT AREAS
3 0.86
CHARGING KEEPOUT
DO NOT OBSTRUCT THE
CHARGING INTERFACE
NO THICKNESS ALLOWED
Ø29.38
7 ELECTRICAL
SENSOR KEEP OUT
NO THICKNESS
ALLOWED IN THIS
REGION
AA
AB
AC
AD
AE
AF
ACOUSTIC KEEP OUT CONES
60.00
0.00
0.50
ALL
AROUND
SPEAKER KEEP OUT
SECTION AA
MICROPHONE KEEP OUT
SECTION AB
MICROPHONE KEEP OUT
SECTION AC
MICROPHONE KEEP OUT
SECTION AD
SIREN KEEP OUT
SECTION AE
MICROPHONE KEEP OUT
SECTION AF
1.00
0.77
6 OPTICAL AND ELECTRICAL
SENSOR KEEP OUT
NO THICKNESS
BELOW THIS LINE
(ALL AROUND)
NOTICE OF PROPRIETARY PROPERTY:
Apple Inc.
SIZE D
DRAWING NUMBER APPLE WATCH ULTRA
REV. 01
SCALE NONE
SHT 3 OF 3

56.171 Apple Watch Series 8（45 毫米）

[英语]

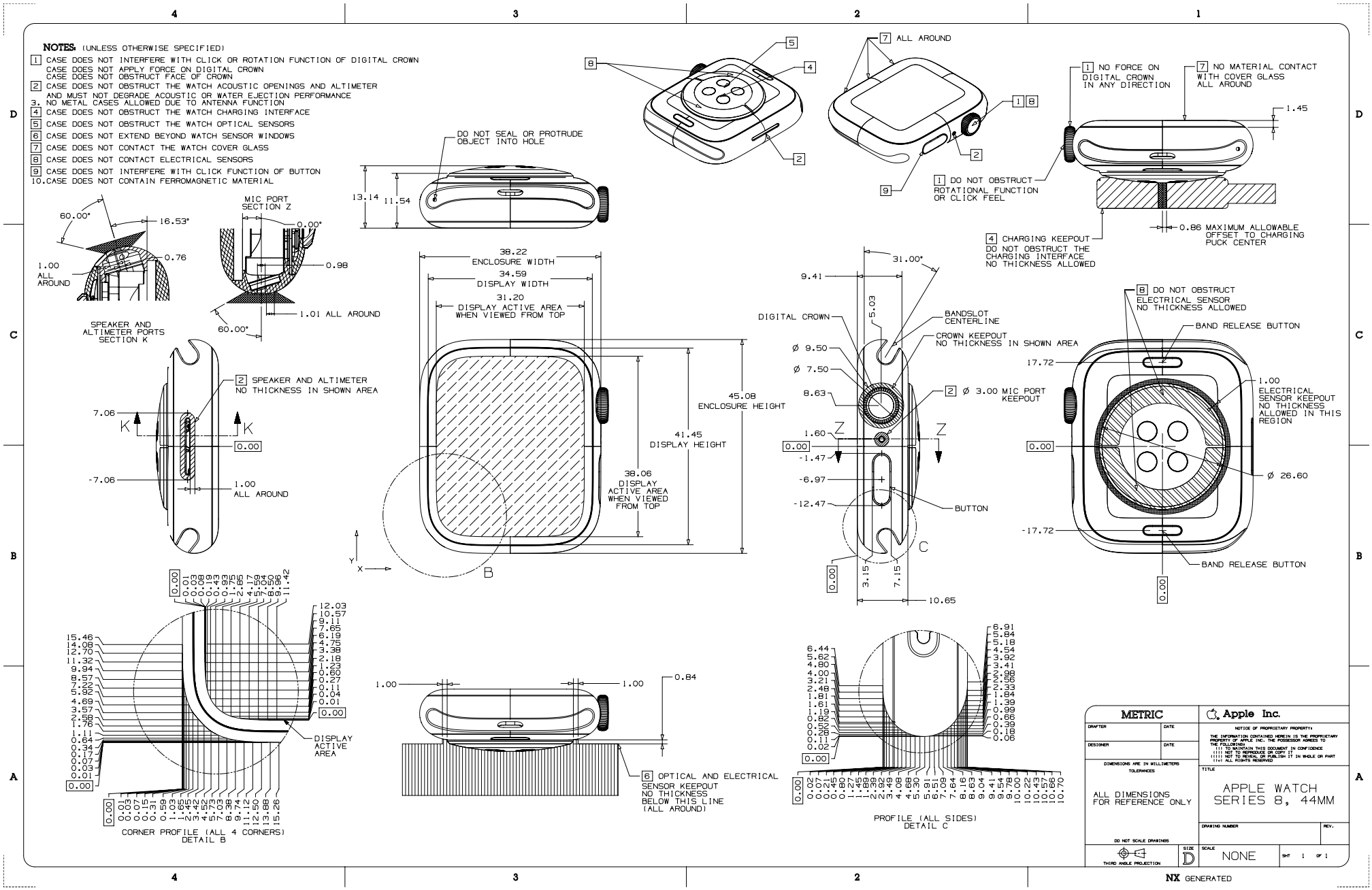

56.172 Apple Watch Series 8（41 毫米）

[英语]

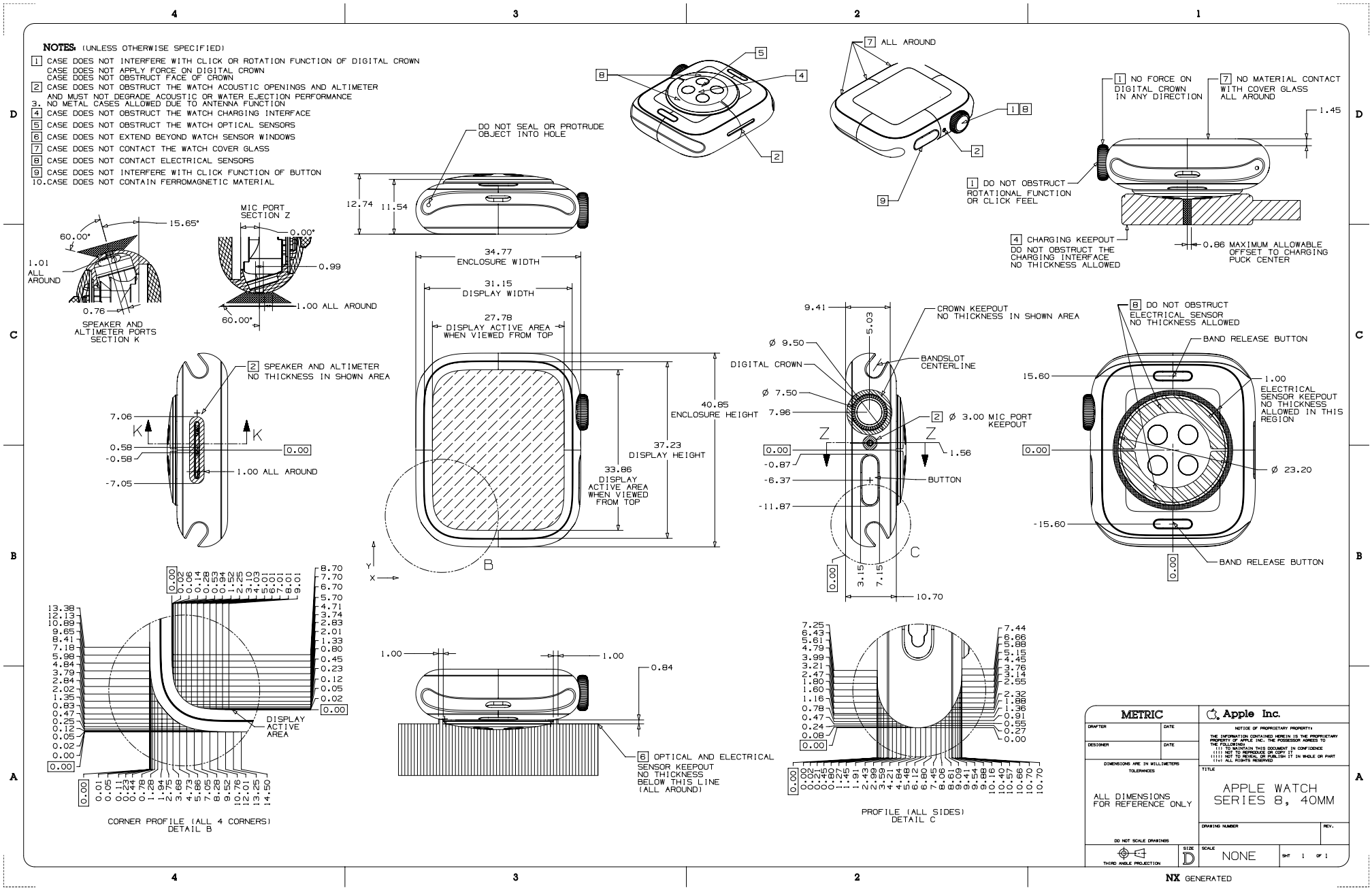

56.173 Apple Watch SE（44 毫米）

[英语]

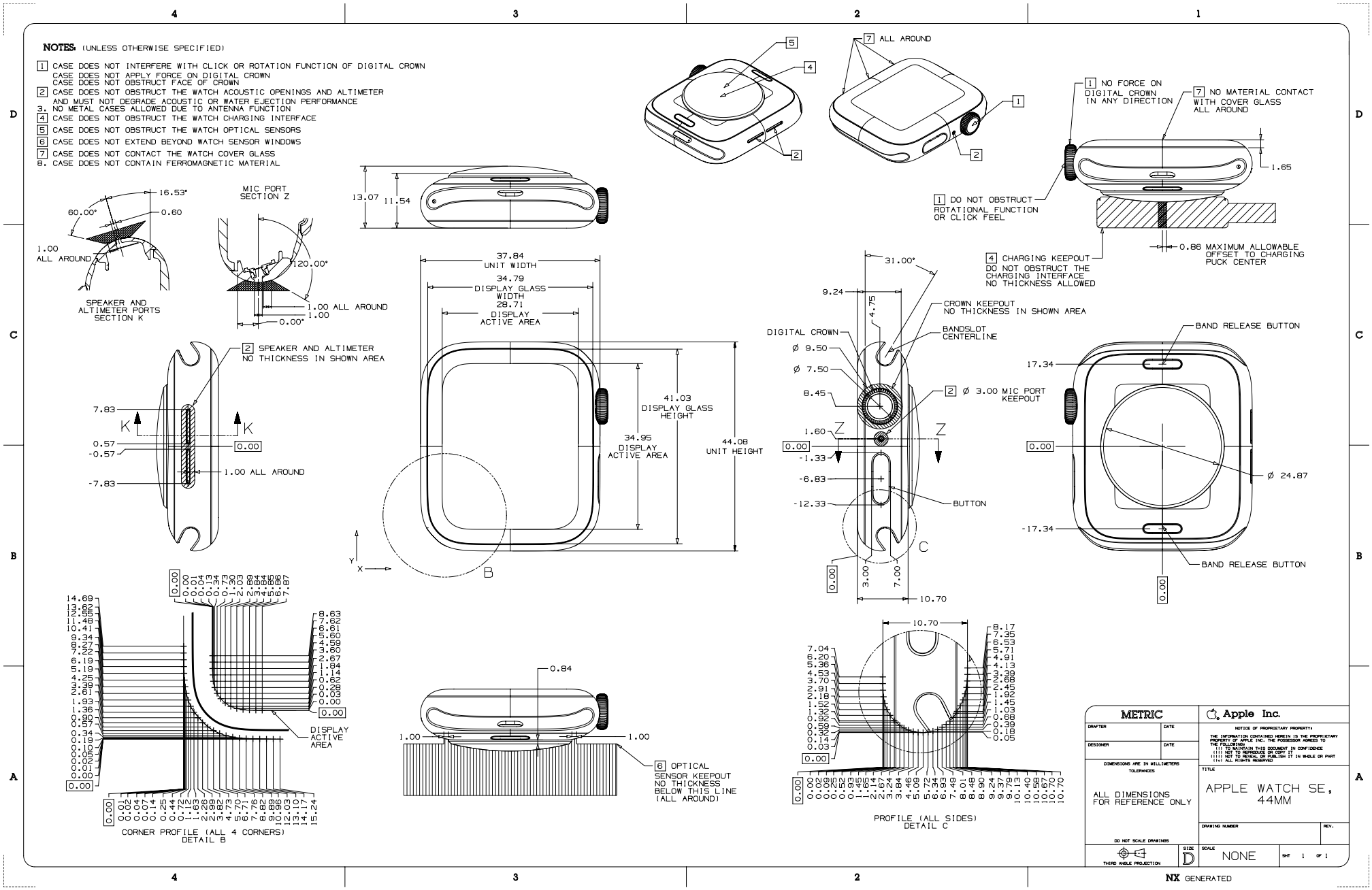

56.174 Apple Watch SE（40 毫米）

[英语]

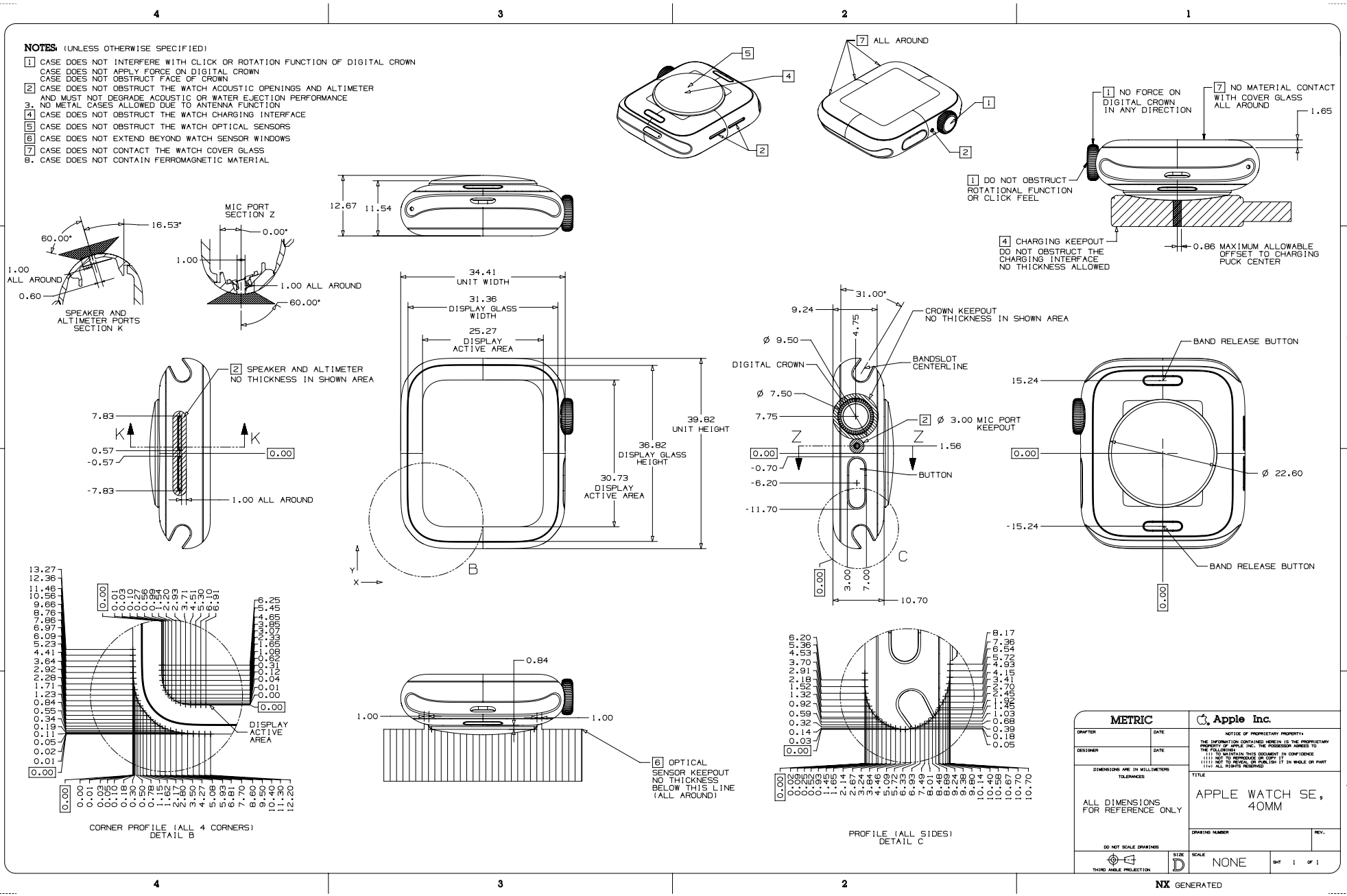

56.175 Apple Watch Series 7（45 毫米）

[英语]

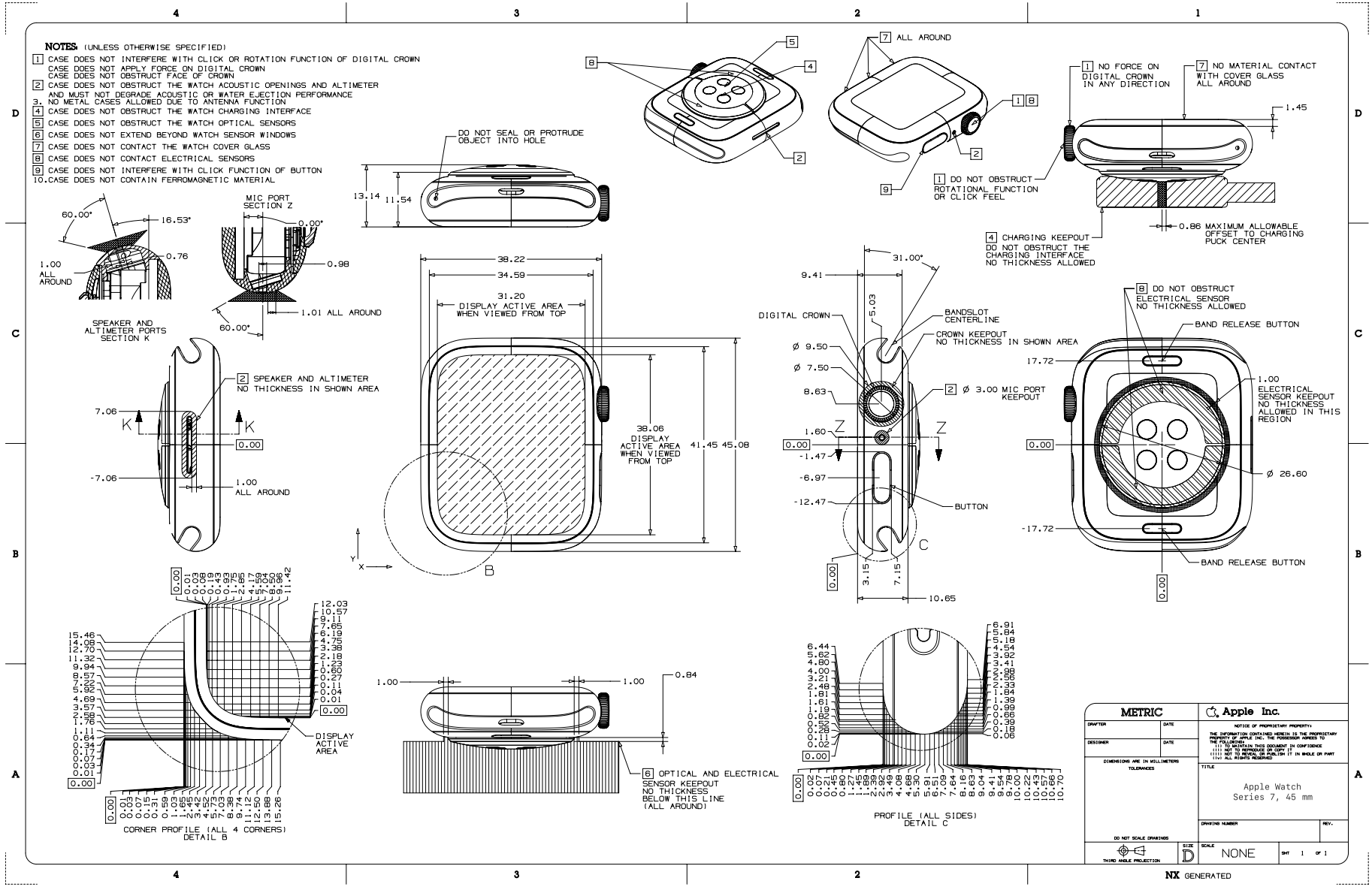

56.176 Apple Watch Series 7（41 毫米）

[英语]

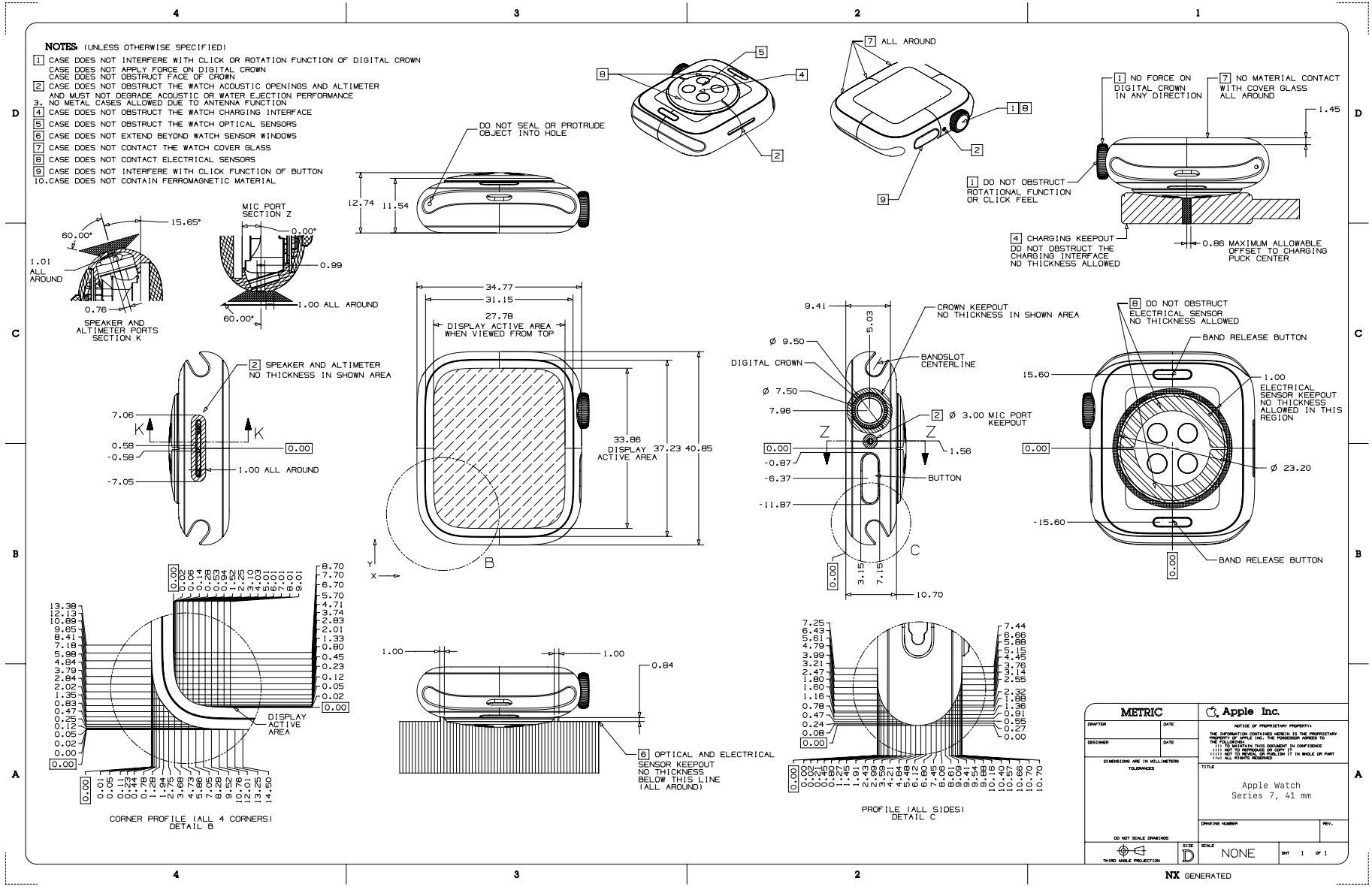

56.177 Apple Watch Series 6（44 毫米）

[英语]

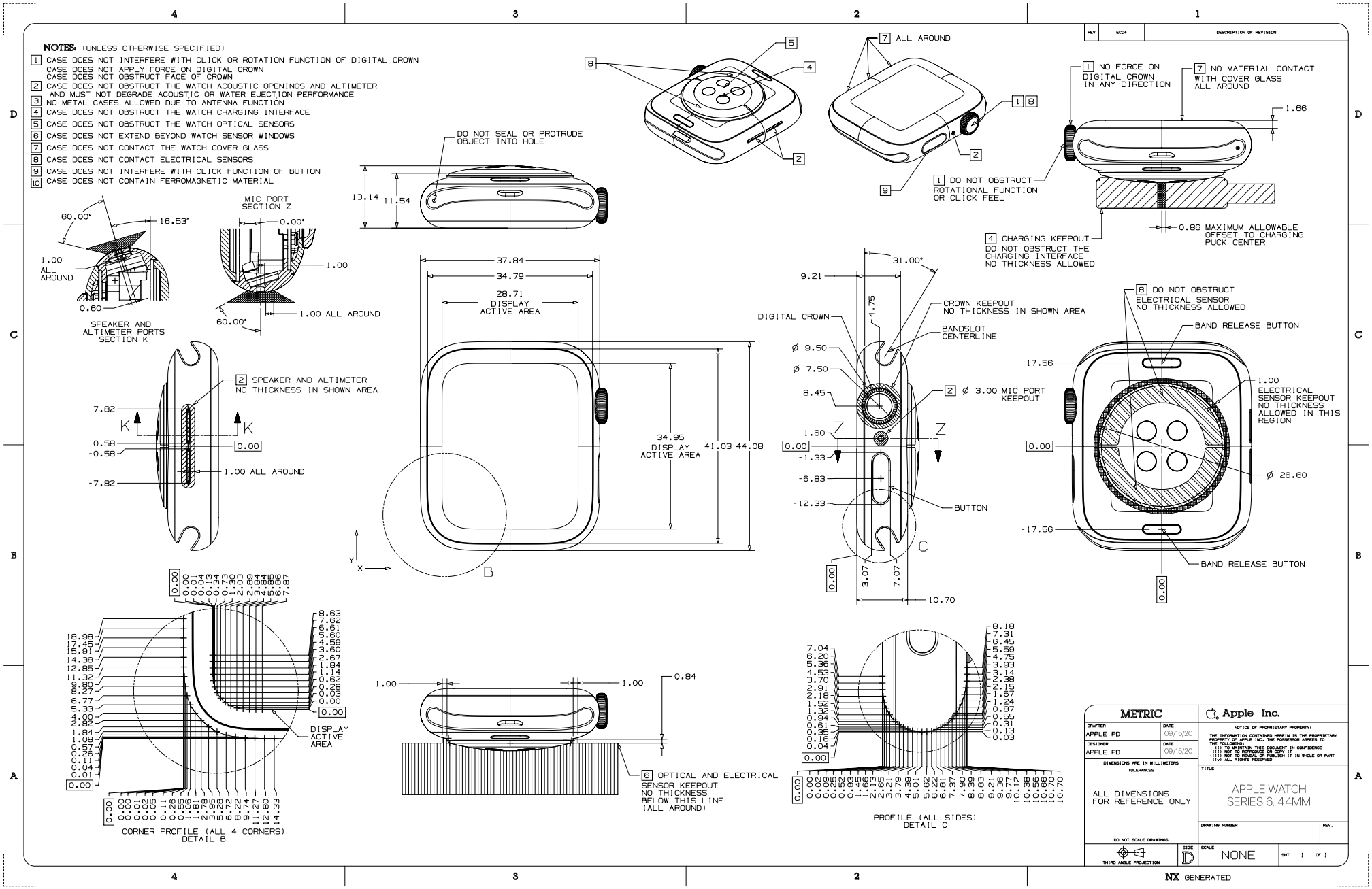

56.178 Apple Watch Series 6（40 毫米）

[英语]

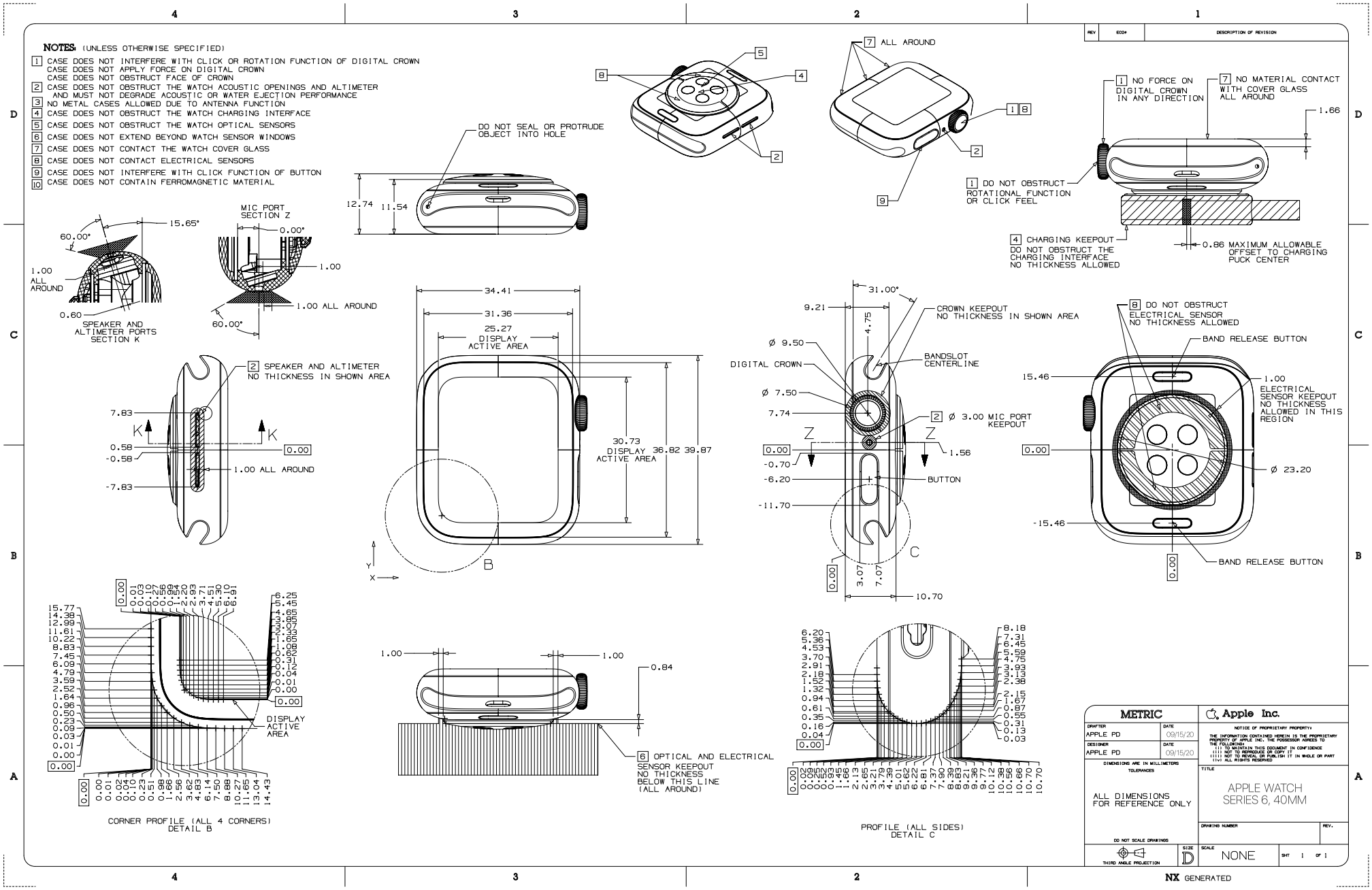

56.179 Apple Watch SE（第 1 代）（44 毫米）

[英语]

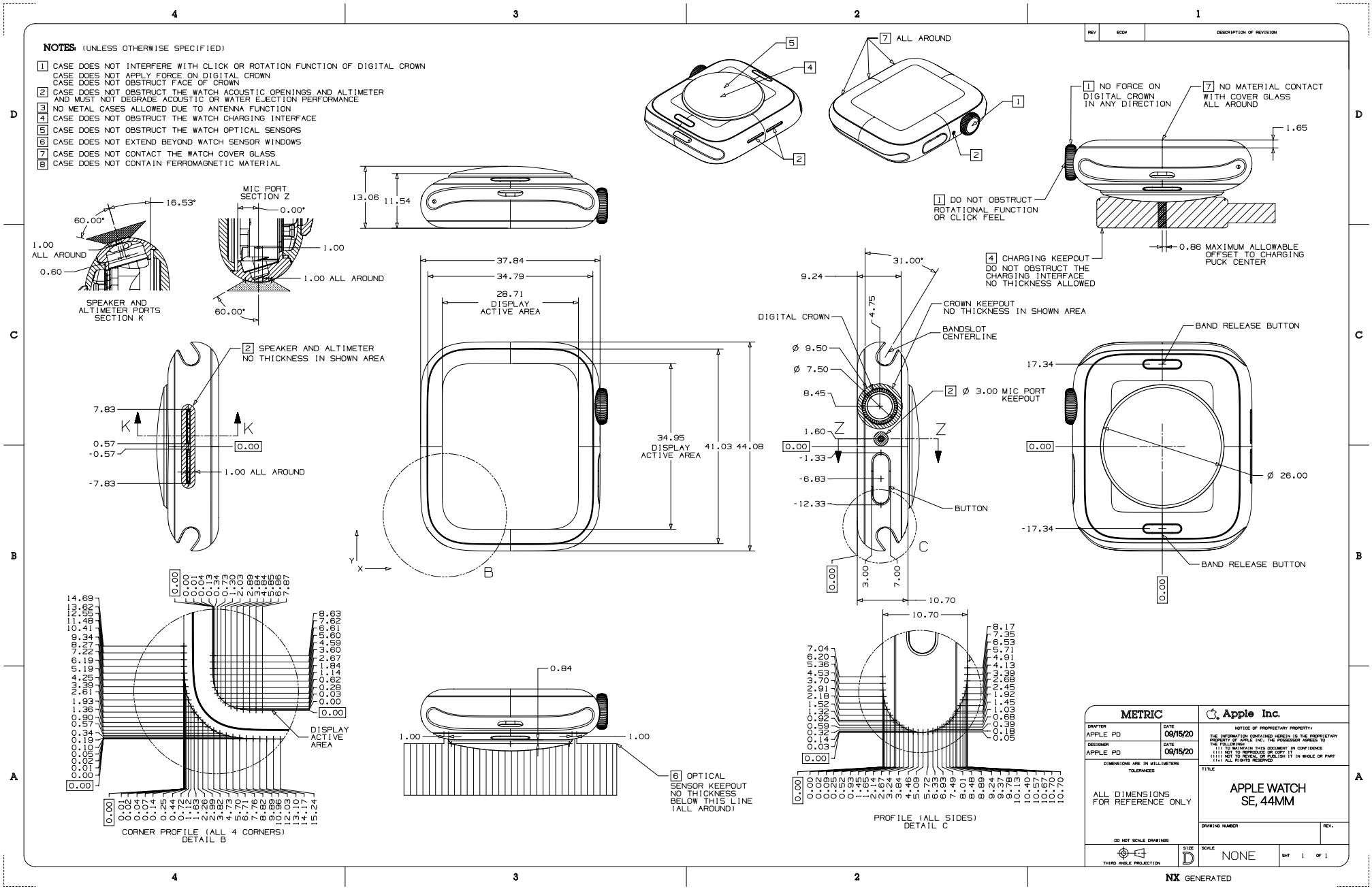

56.180 Apple Watch SE（第 1 代）（40 毫米）

[英语]

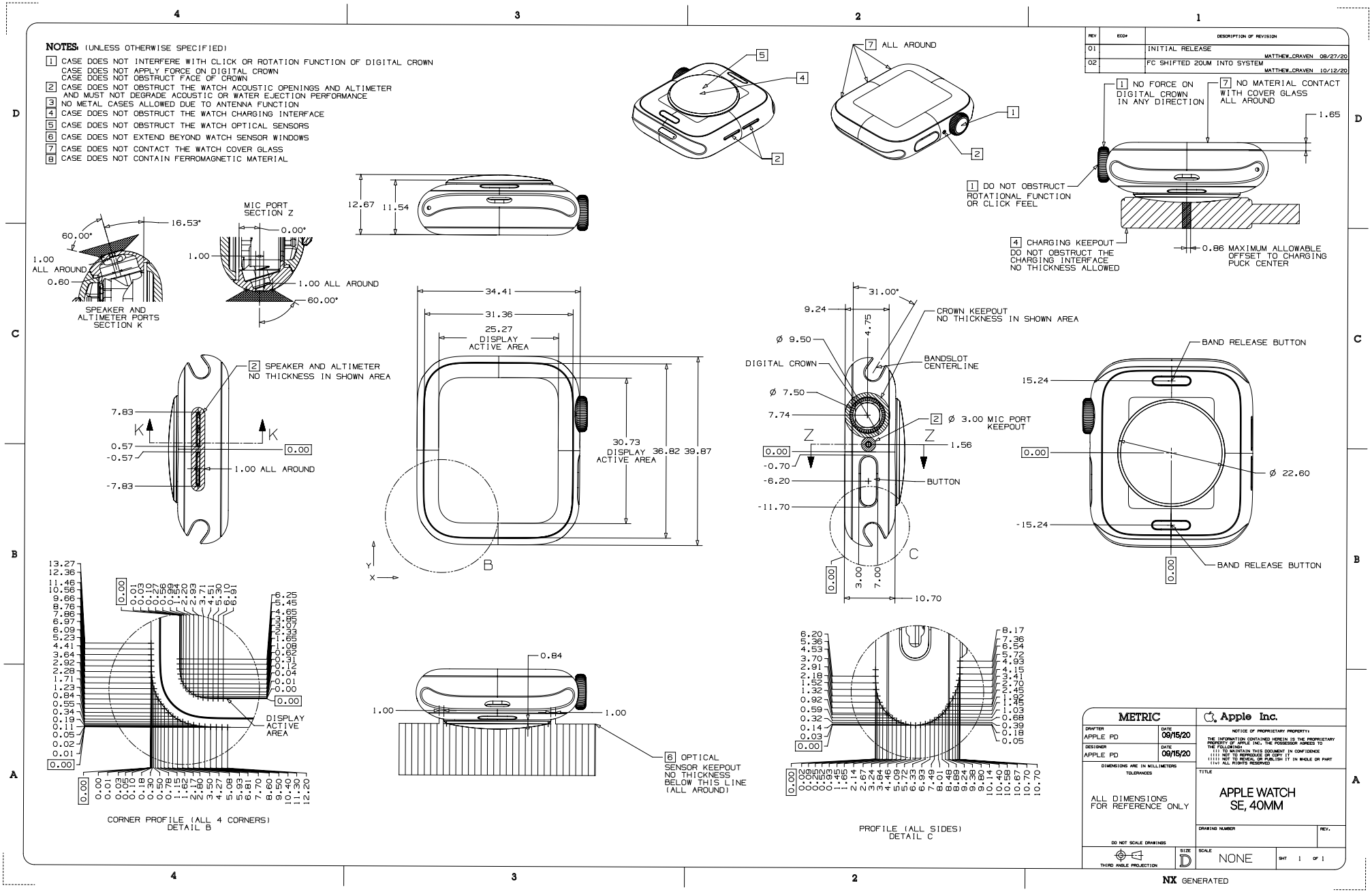

56.181 Apple Watch Series 5（44 毫米）

[英语]

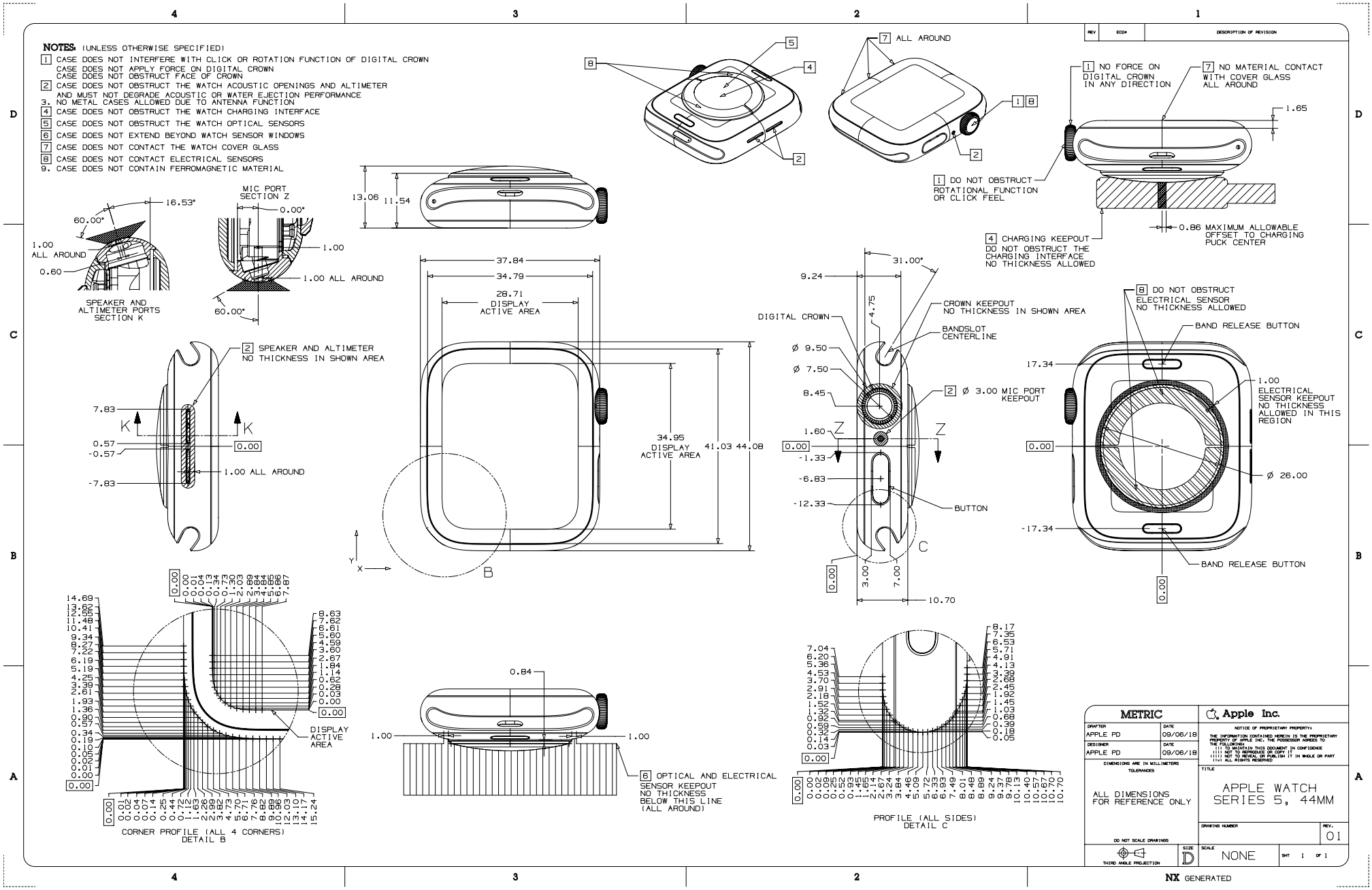

56.182 Apple Watch Series 5（40 毫米）

[英语]

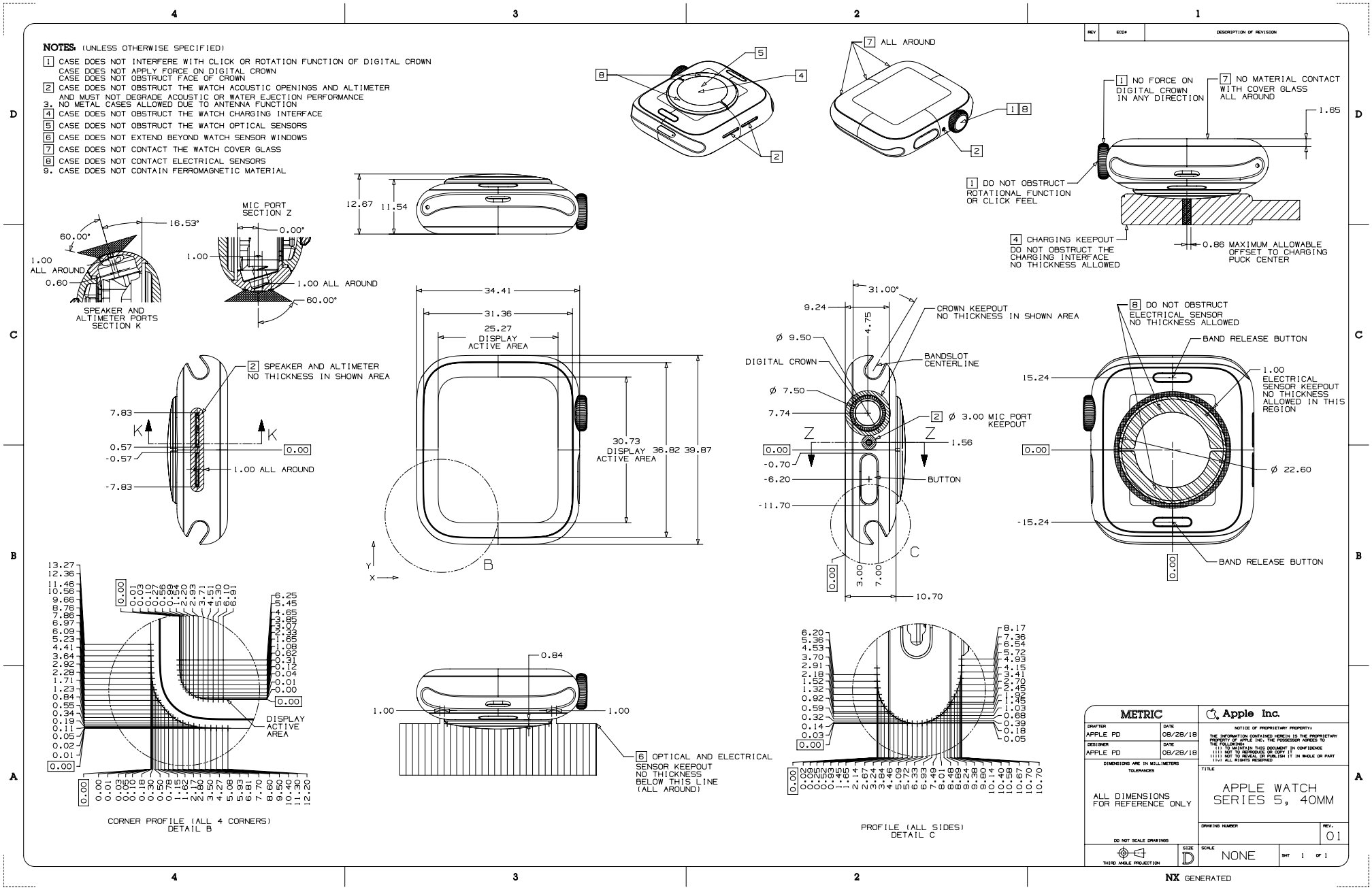

56.183 Apple Watch Series 5（陶瓷，44 毫米）

[英语]

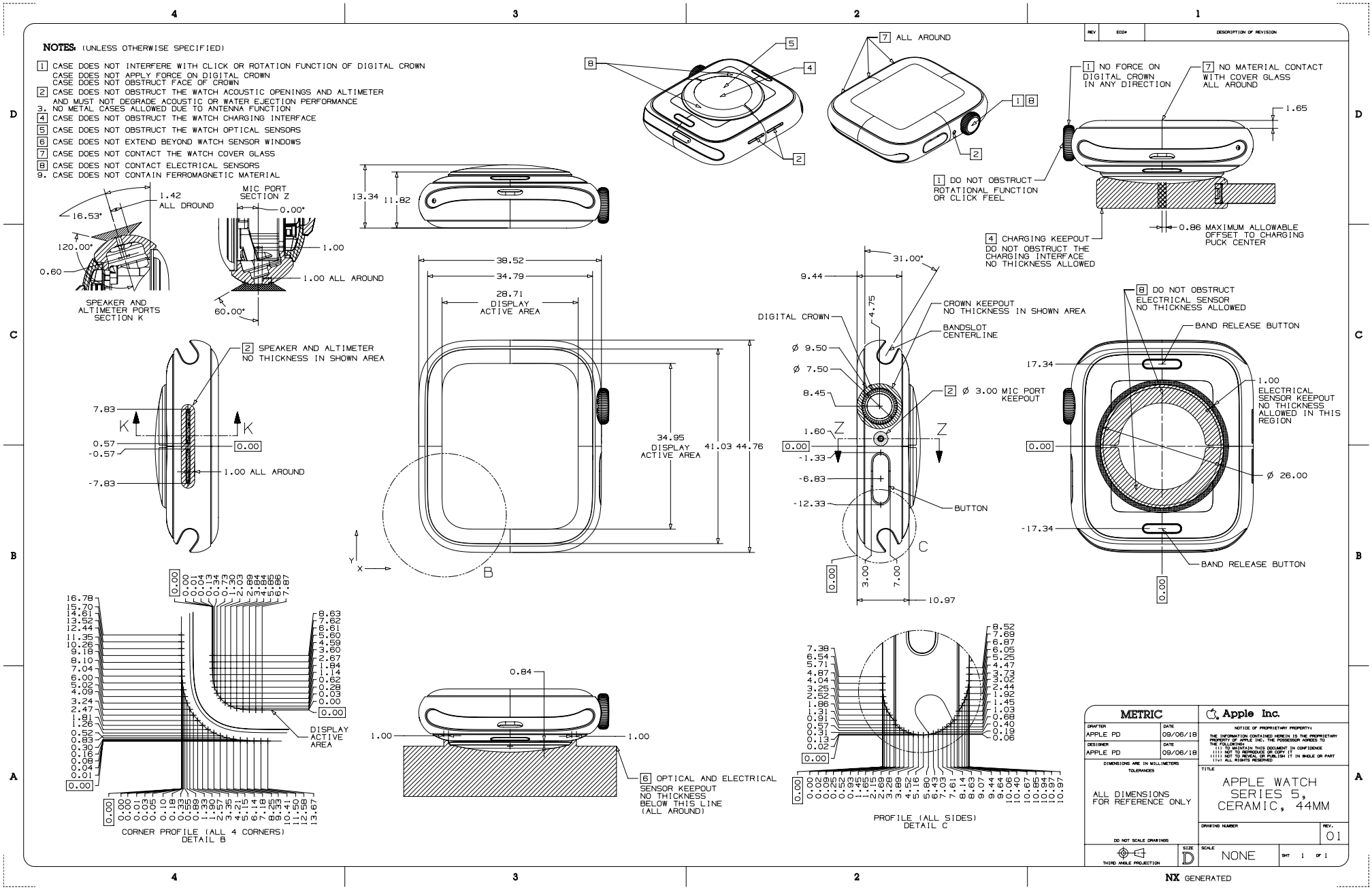

56.184 Apple Watch Series 5（陶瓷，40 毫米）

[英语]

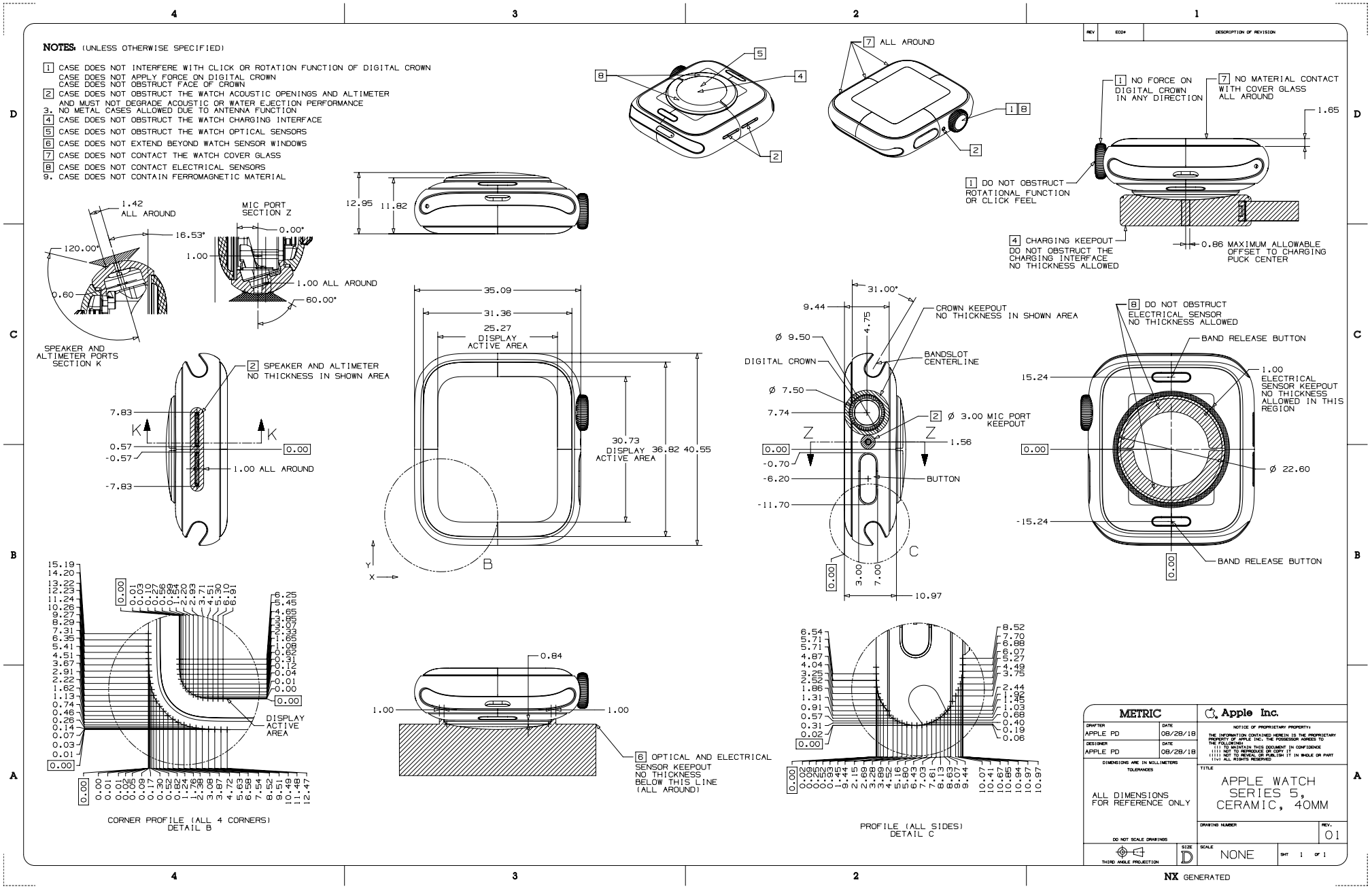

56.185 Apple Watch Series 4（44 毫米）

[英语]

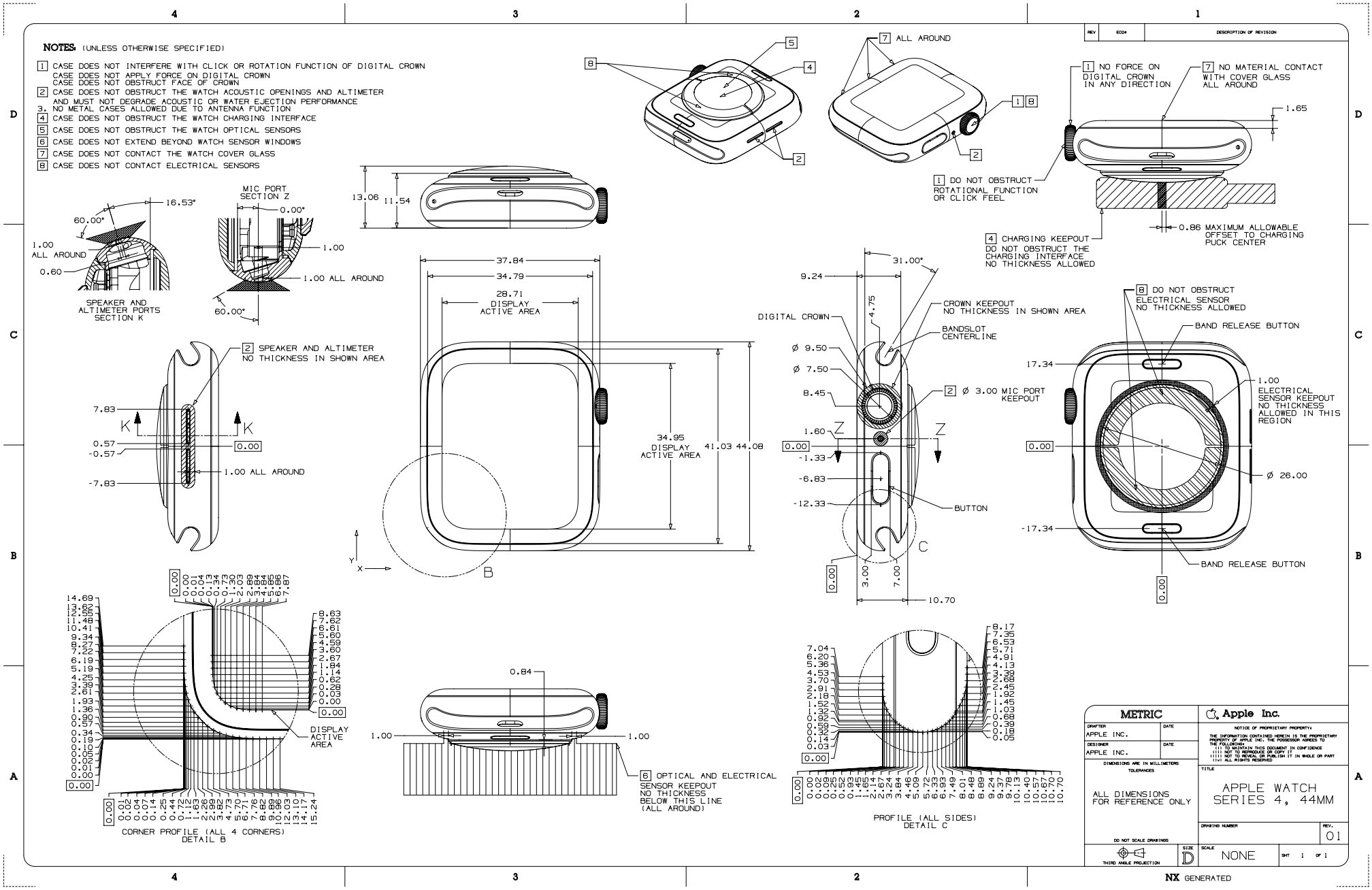

56.186 Apple Watch Series 4（40 毫米）

[英语]

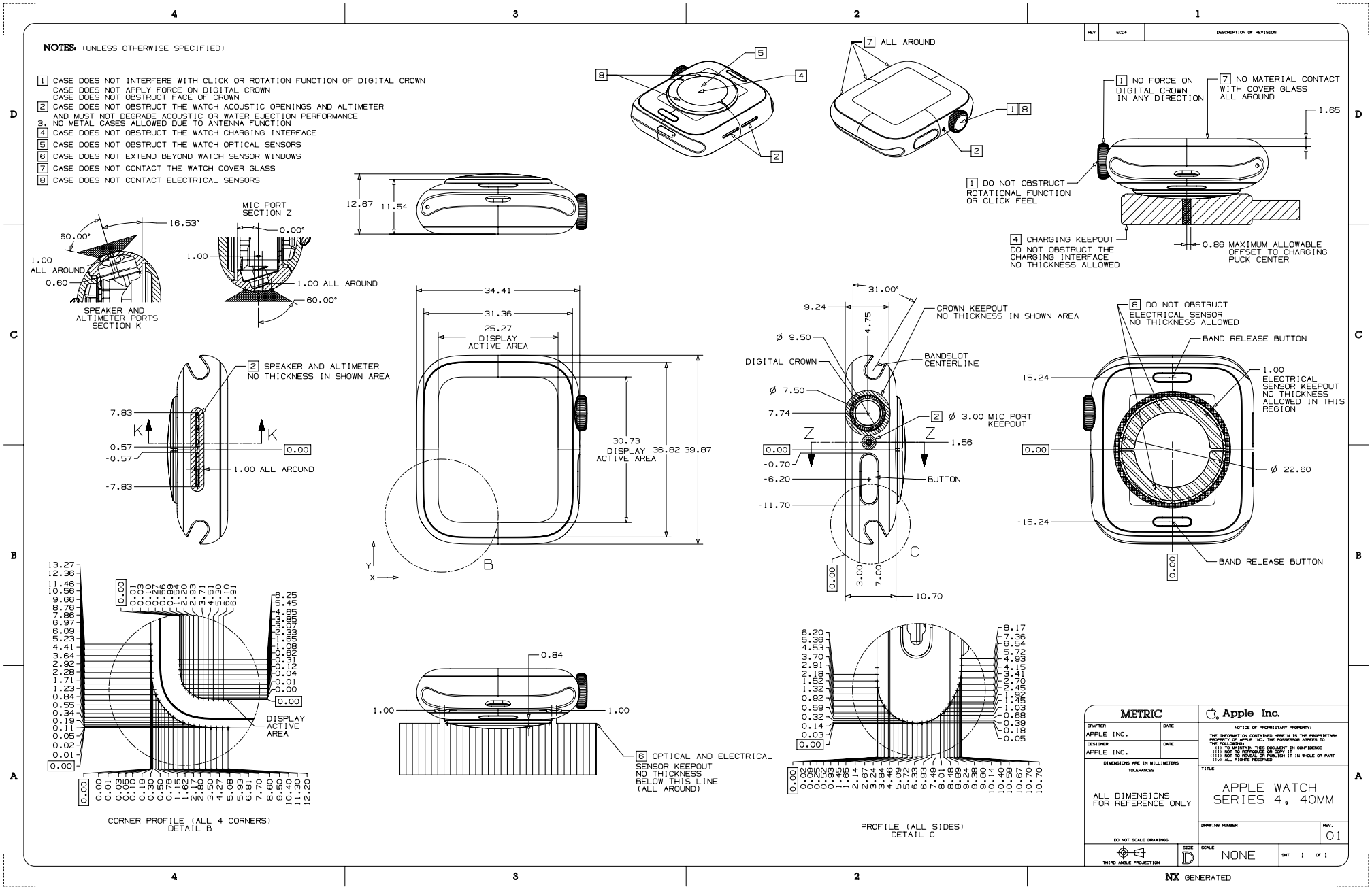

56.187 Apple Watch Series 3（陶瓷，42 毫米）

[英语]

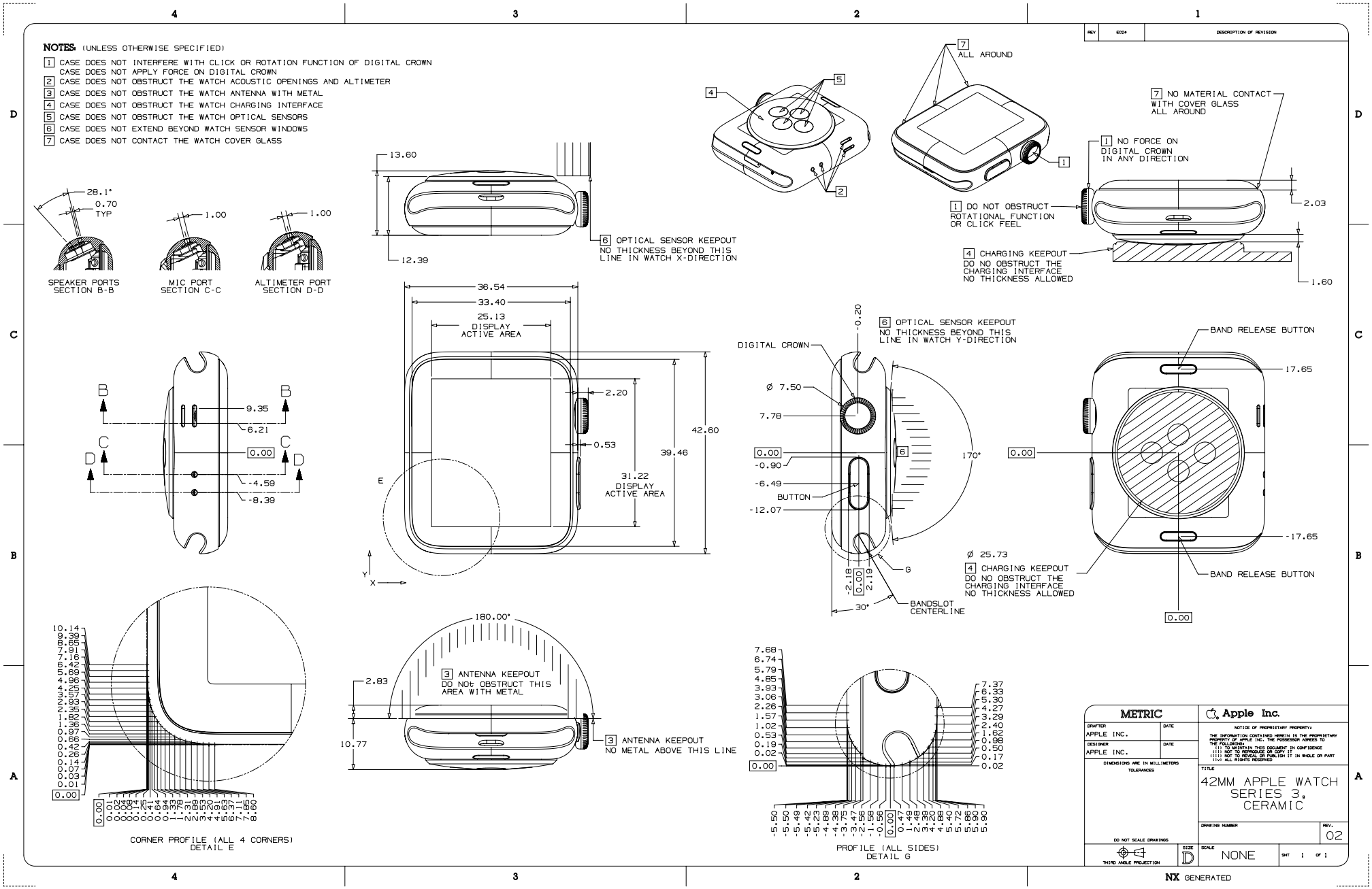

56.188 Apple Watch Series 3（陶瓷，38 毫米）

[英语]

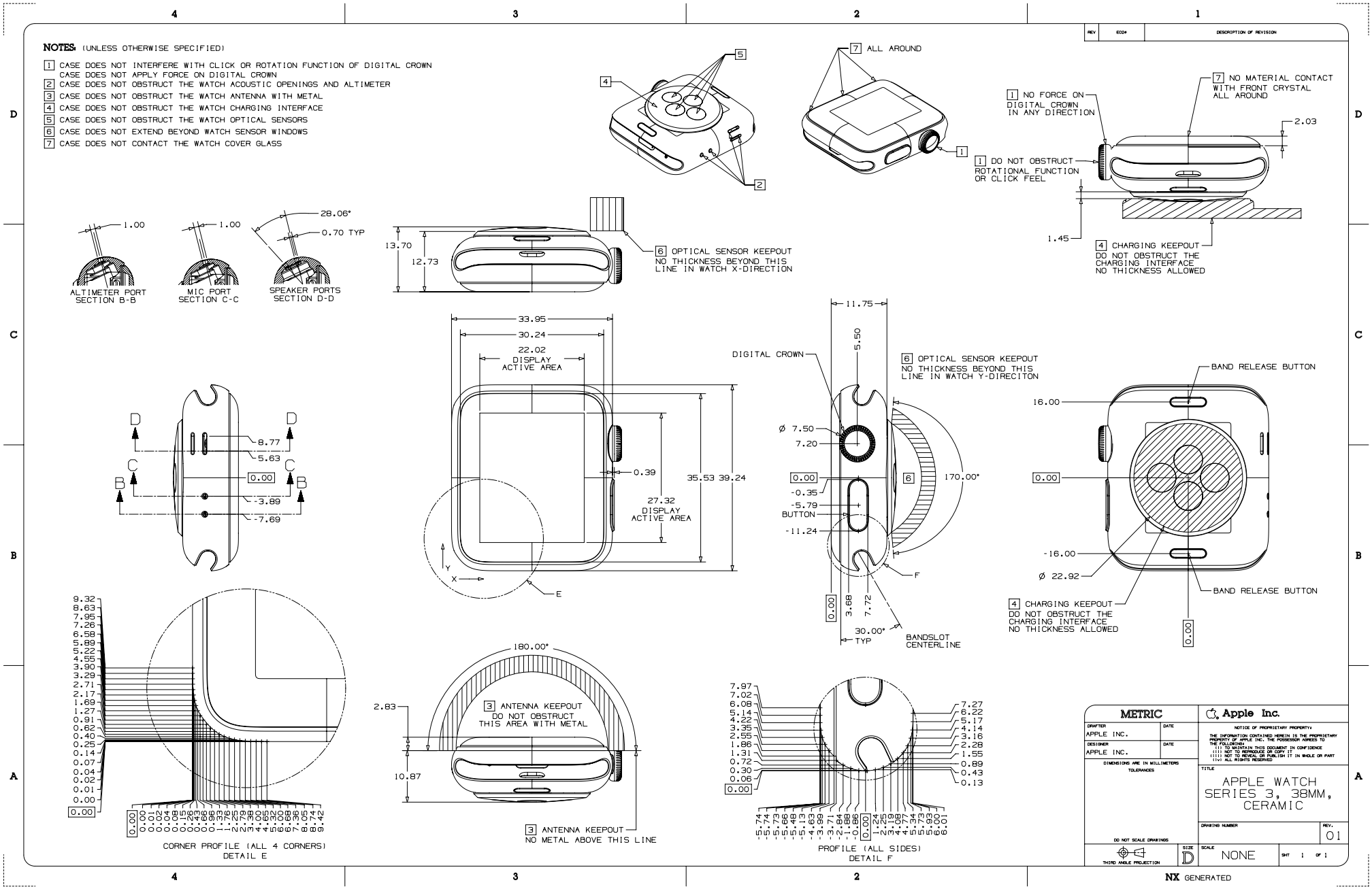

56.189 Apple Watch Series 3（金属，42 毫米）

[英语]

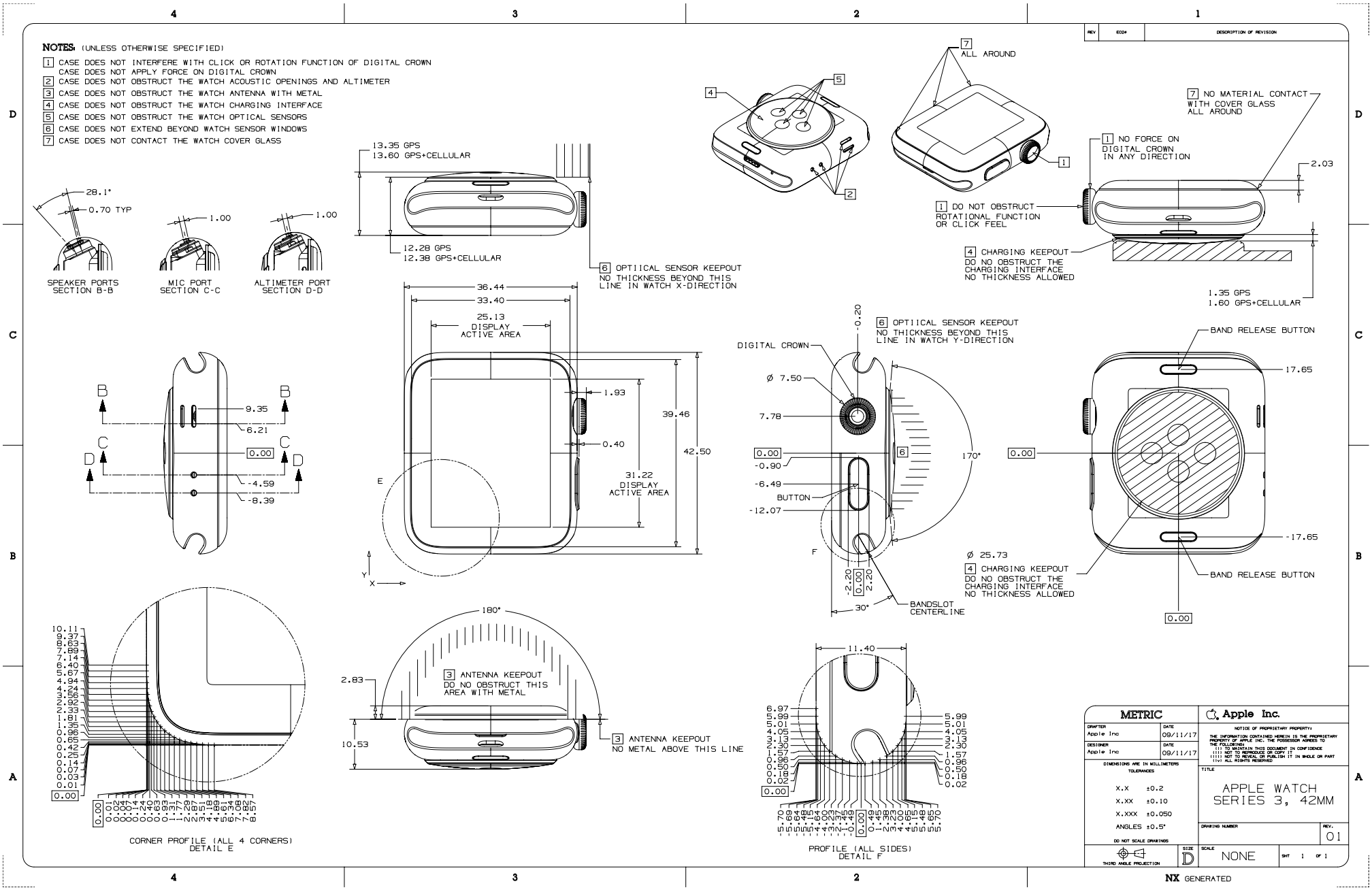

56.190 Apple Watch Series 3（金属，38 毫米）

[英语]

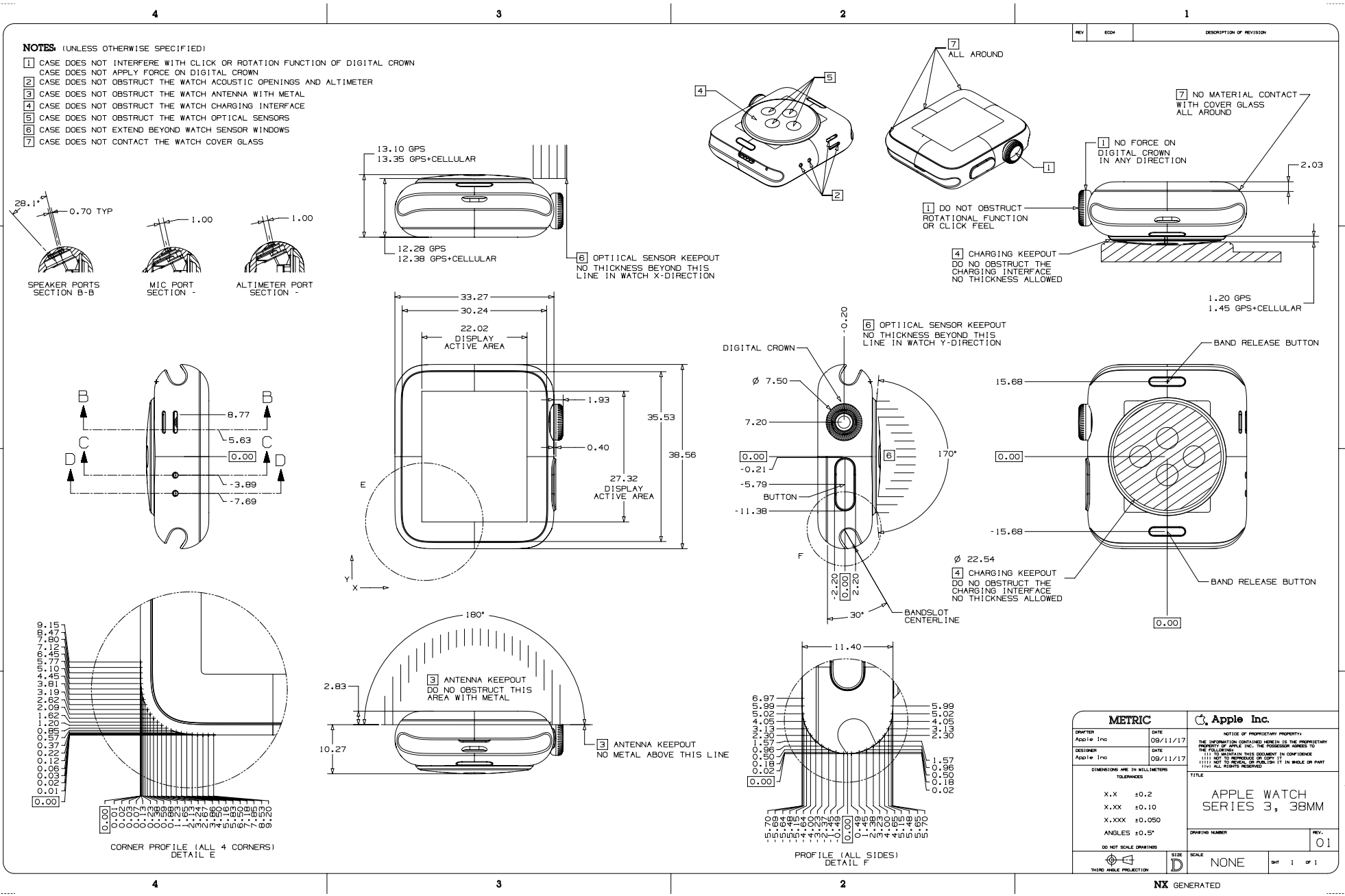

56.191 Apple Watch Series 2（陶瓷，42 毫米）

[英语]

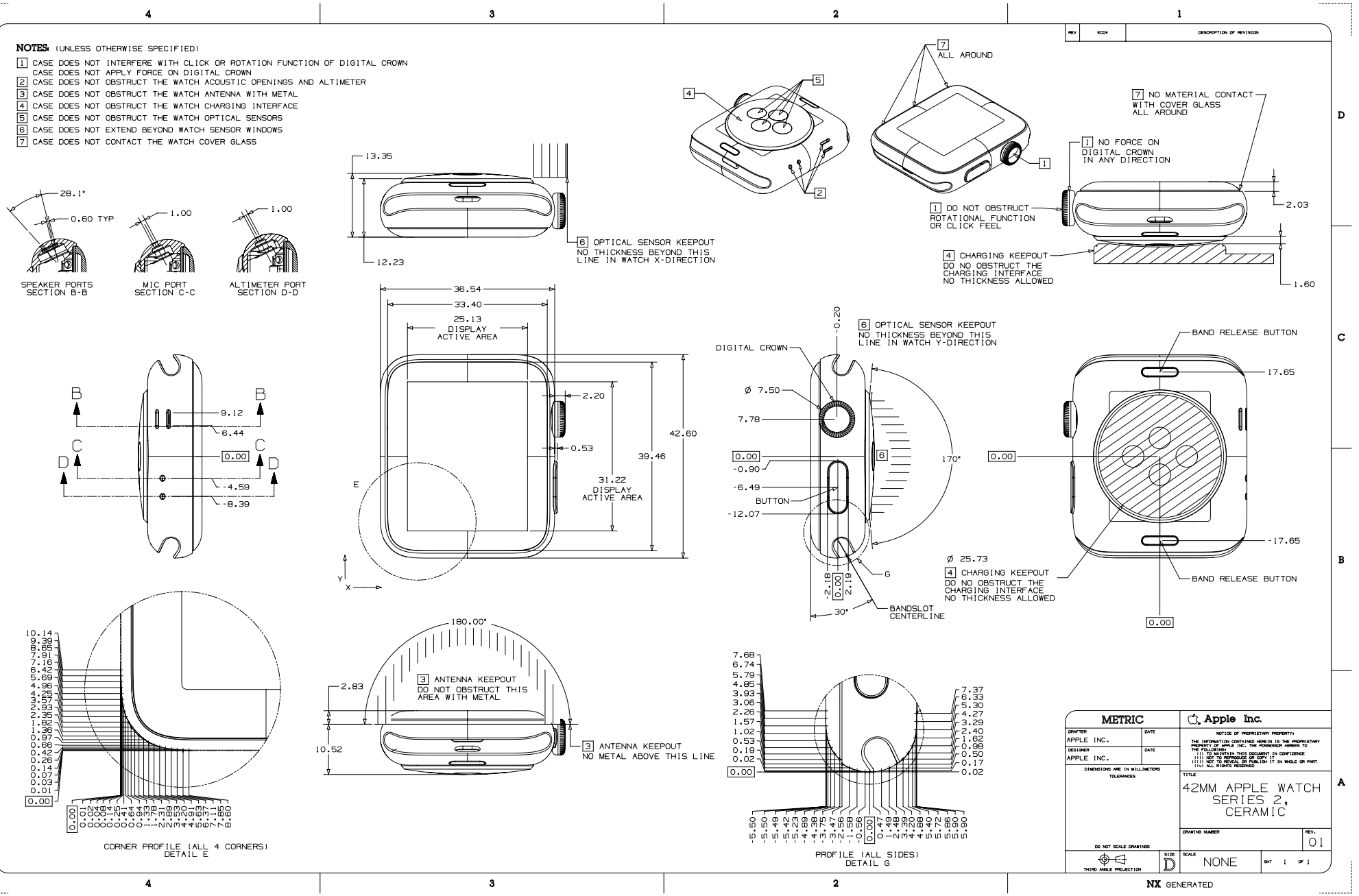

56.192 Apple Watch Series 2（陶瓷，38 毫米）

[英语]

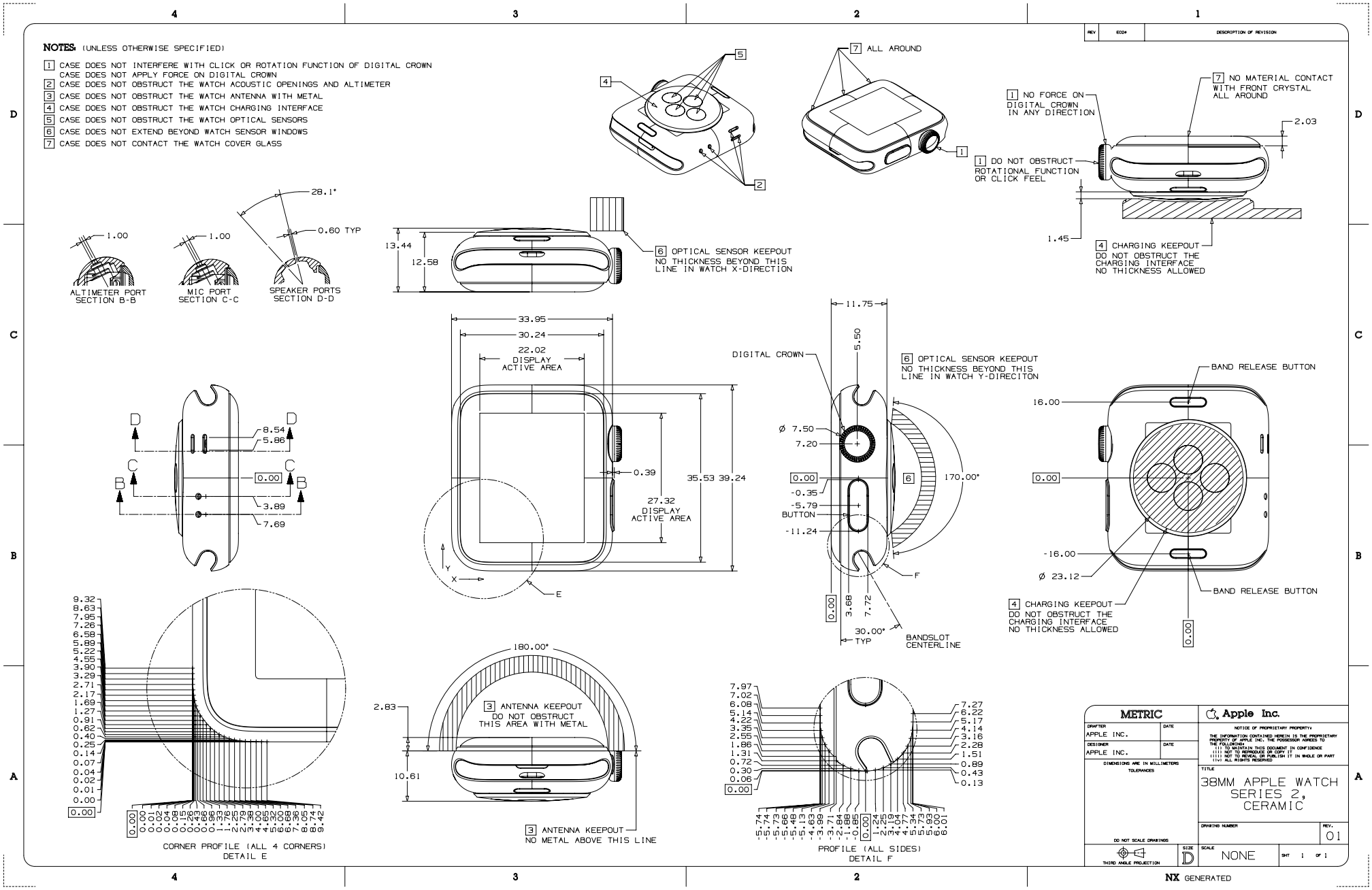

56.193 Apple Watch Series 2（金属，42 毫米）

[英语]

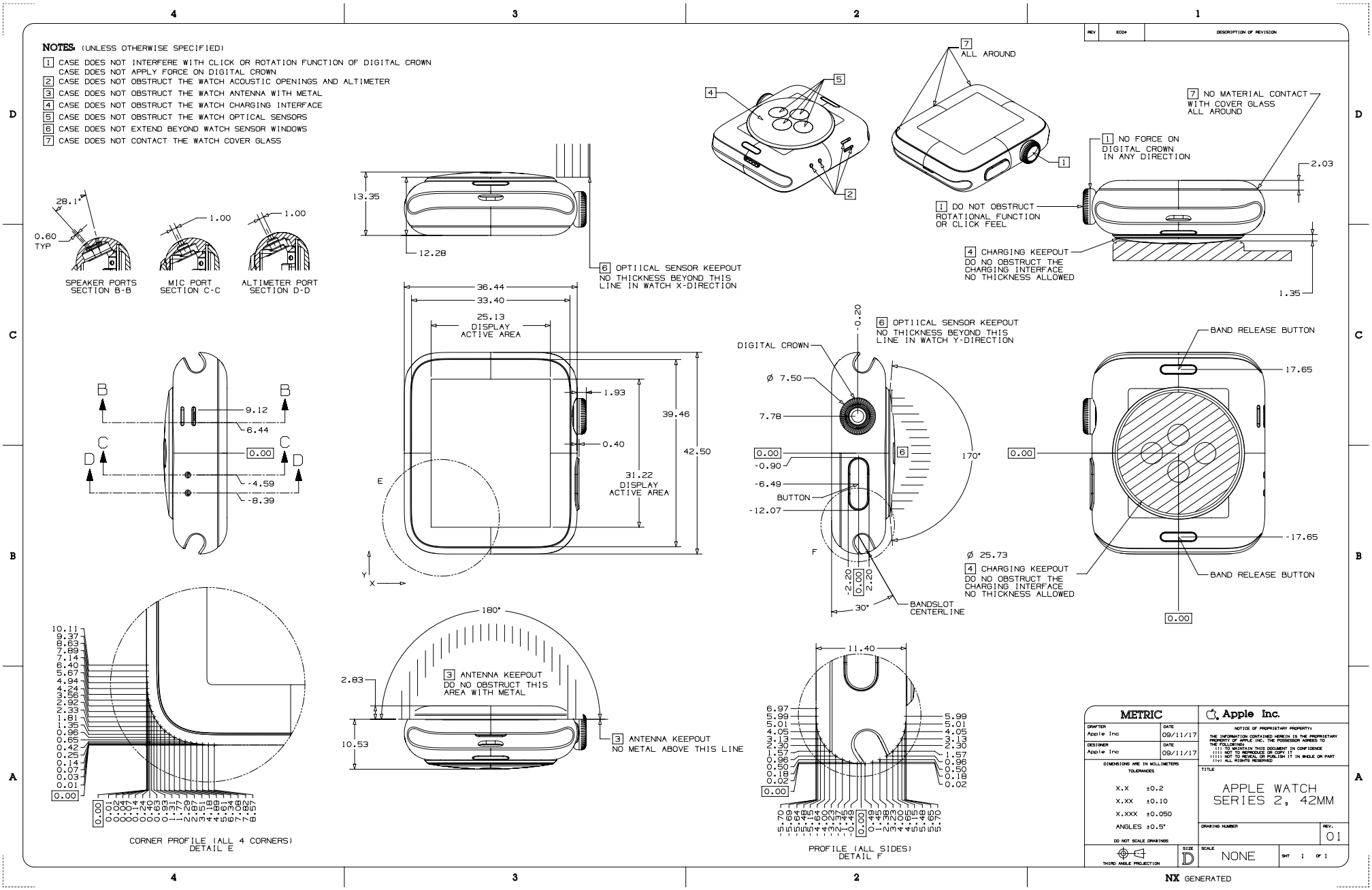

56.194 Apple Watch Series 2（金属，38 毫米）

[英语]

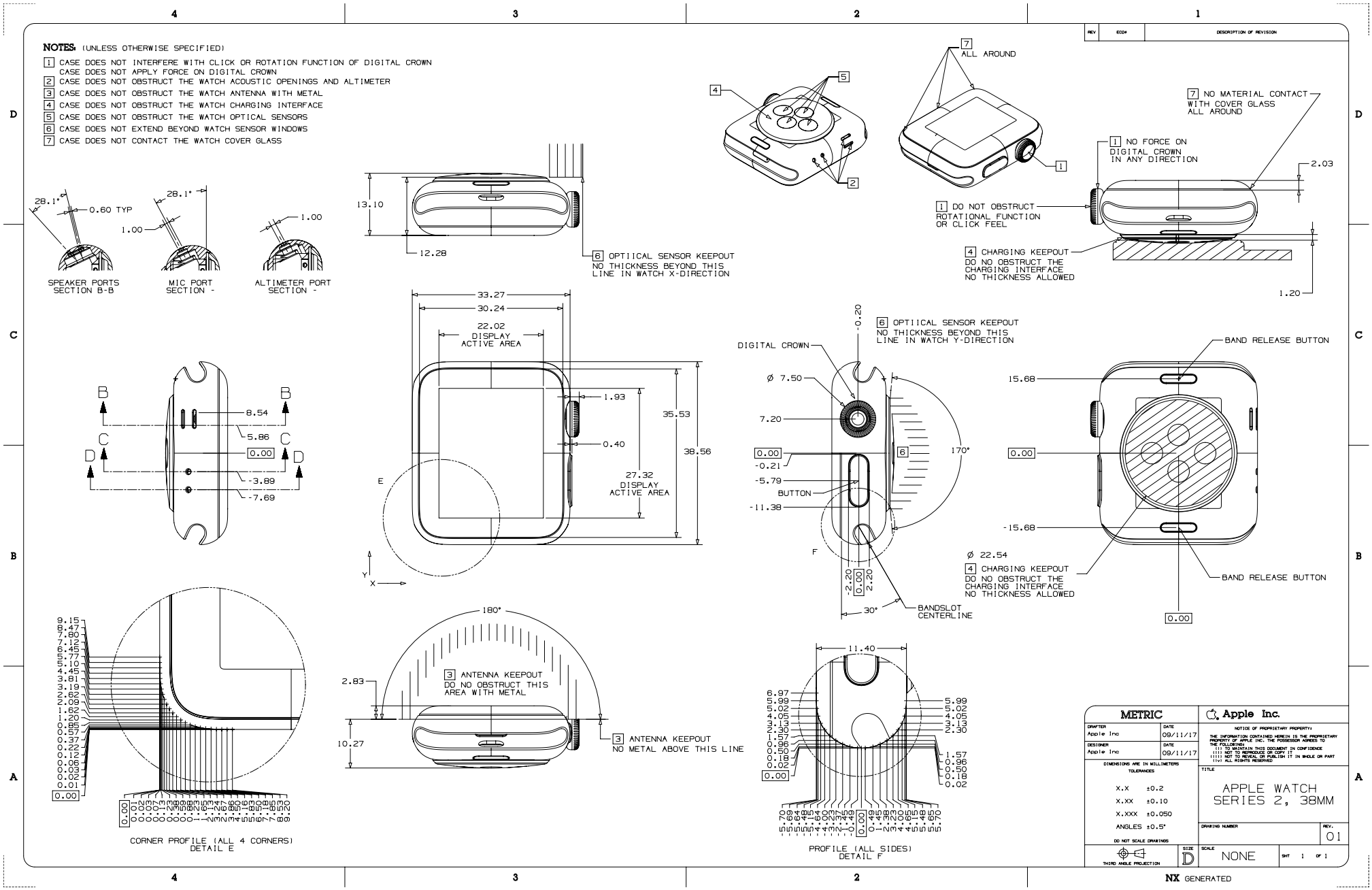

56.195 Apple Watch（第 1 代）和 Apple Watch Series 1（42 毫米）

[英语]

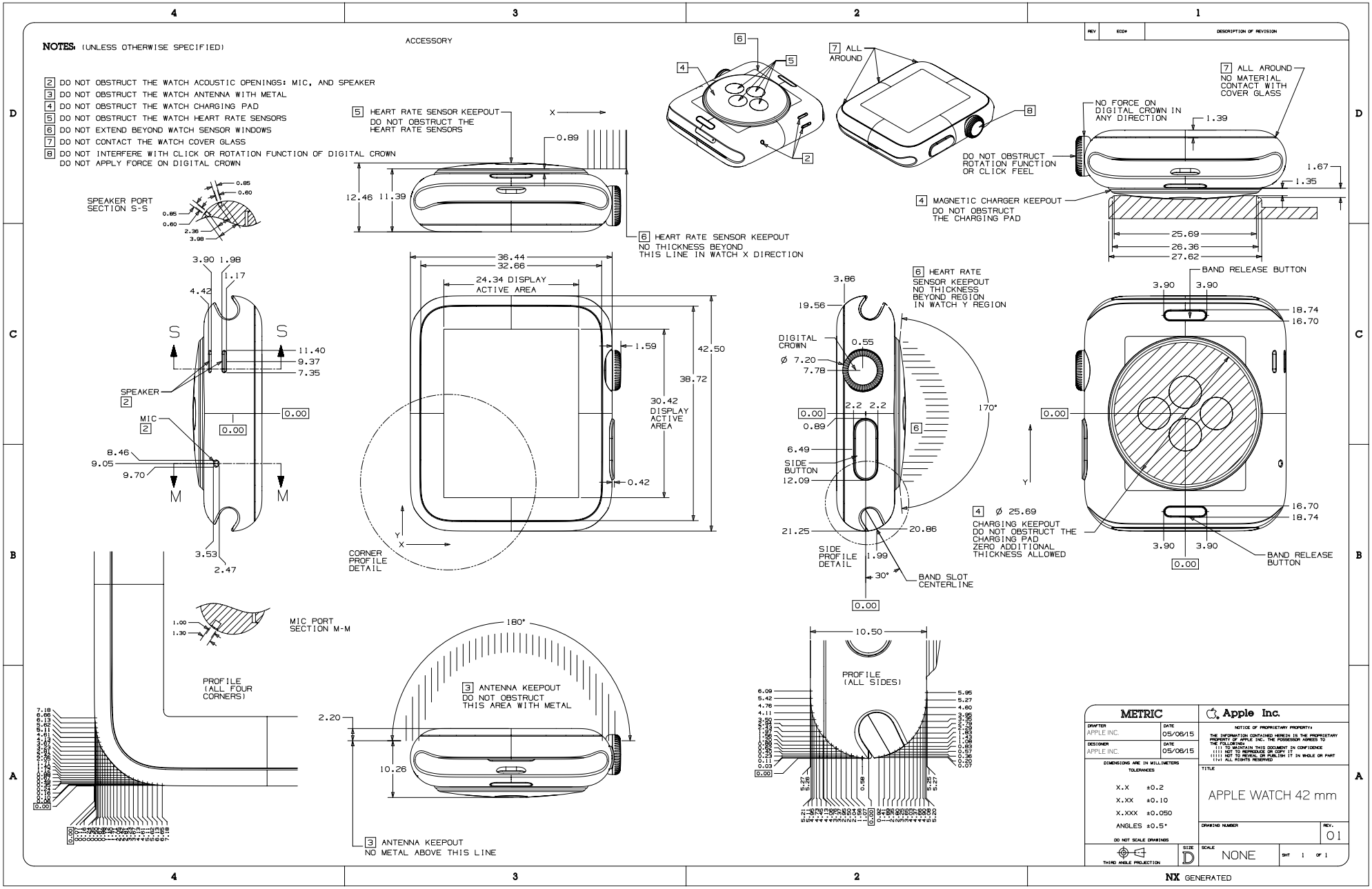

56.196 Apple Watch（第 1 代）和 Apple Watch Series 1（38 毫米）

[英语]

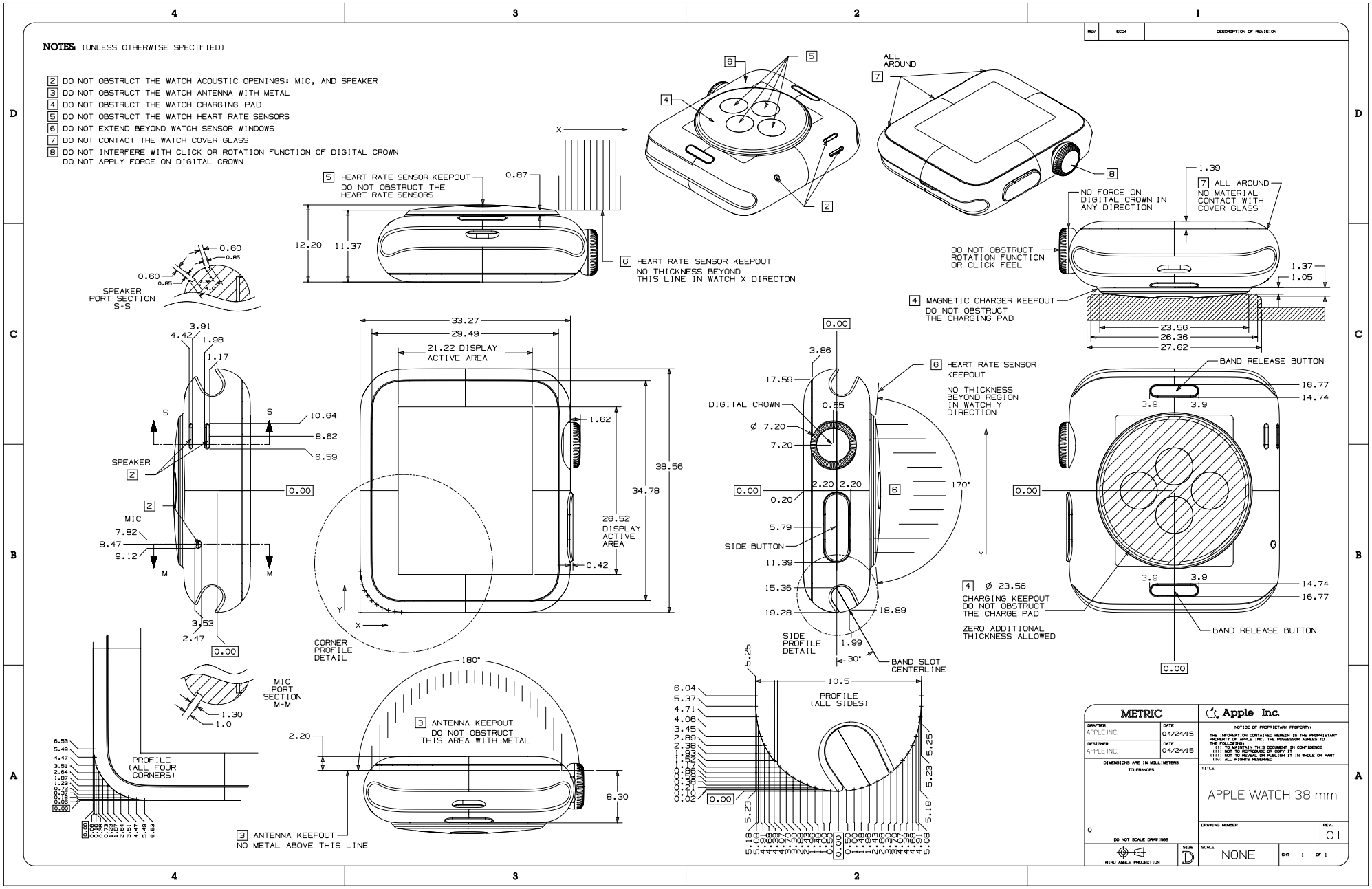

56.197 适用于 AirPods Pro（第 2 代）的 MagSafe 充电盒 (USB-C) 1/3

[英语]

NOTES: (UNLESS OTHERWISE SPECIFIED)

1. ACCESSORIES INTRUDING INTO SHADED REGIONS WILL NEGATIVELY AFFECT PRODUCT PERFORMANCE.
2. TO ENSURE FULL FUNCTIONALITY, DO NOT OBSTRUCT THIS AREA WITH METAL OR OTHER CONDUCTIVE MATERIAL.
3. TO ENSURE FULL FUNCTIONALITY WITH MINIMAL IMPACT TO QI CHARGING PERFORMANCE, MINIMIZE ANY MATERIAL THICKNESS.
4. TO ENABLE CHARGING VIA APPLE WATCH CHARGER, IT IS RECOMMENDED THERE BE NO MATERIAL BETWEEN BACK OF DEVICE AND WATCH CHARGER.
5. PROTECTIVE CASES OR COVERS MAY DETUNE OR IMPACT RF & WIRELESS CHARGING PERFORMANCE.
   IMPACT IS HIGHLY DEPENDENT ON MATERIAL AND MATERIAL THICKNESS.
   HIGHLY RECOMMEND AVOIDING METAL MATERIAL AND FOLLOWING GUIDELINES IN THIS DOCUMENT TO MINIMIZE IMPACT.

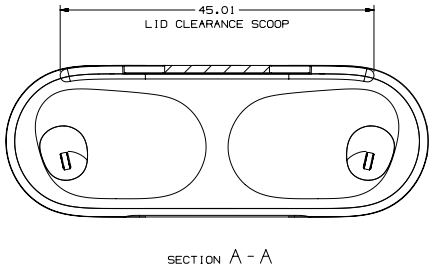

SECTION A - A

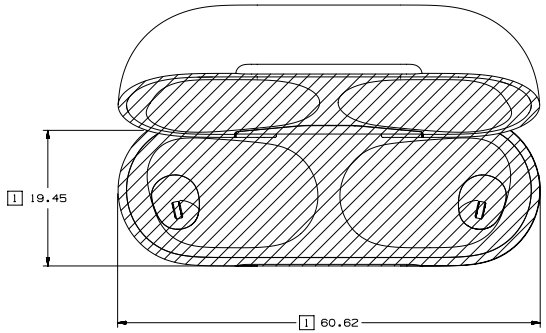

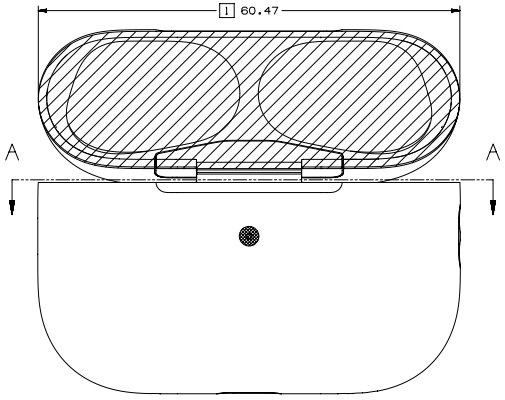

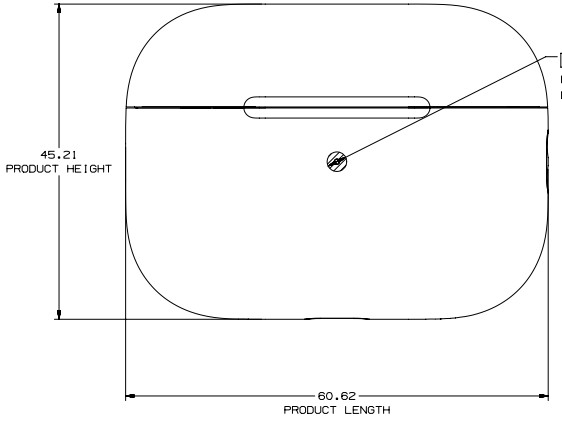

1 LED OUTER DIAMETER = 0.80mm
RECOMMEND Ø2.80
DO NOT OBSTRUCT LED

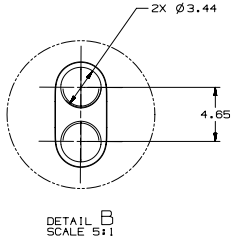

DETAIL B
SCALE 5:1

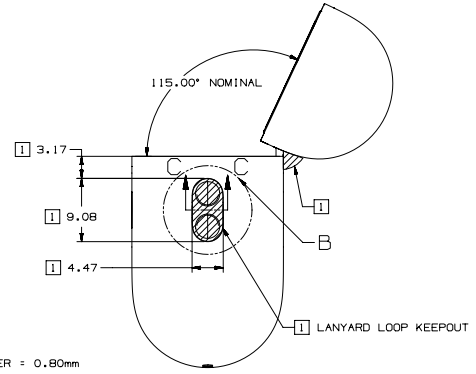

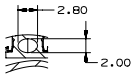

SECTION C - C
INTERNAL DIMENSIONS OF LANYARD LOOP

METRIC	Apple Inc.
DRAWTER / DATE	NOTICE OF PROPRIETARY PROPERTY: THE INFORMATION CONTAINED HEREIN IS THE PROPRIETARY PROPERTY OF APPLE INC. THE POSSESSOR AGREES TO THE FOLLOWING: (i) TO MAINTAIN THIS DOCUMENT IN CONFIDENCE (ii) NOT TO REPRODUCE OR COPY IT (iii) NOT TO REVEAL OR PUBLISH IT IN WHOLE OR PART (iv) ALL RIGHTS RESERVED
DESIGNER / DATE	
DIMENSIONS ARE IN MILLIMETERS TOLERANCES	TITLE: AIRPODS PRO GEN 2 WIRELESS CASE, USB-C
DO NOT SCALE DRAWINGS	DRAWING NUMBER / REV.
THIRD ANGLE PROJECTION / SIZE D / SCALE NONE	SHT 1 OF 3

NX GENERATED

56.198 适用于 AirPods Pro（第 2 代）的 MagSafe 充电盒 (USB-C) 2/3

[英语]

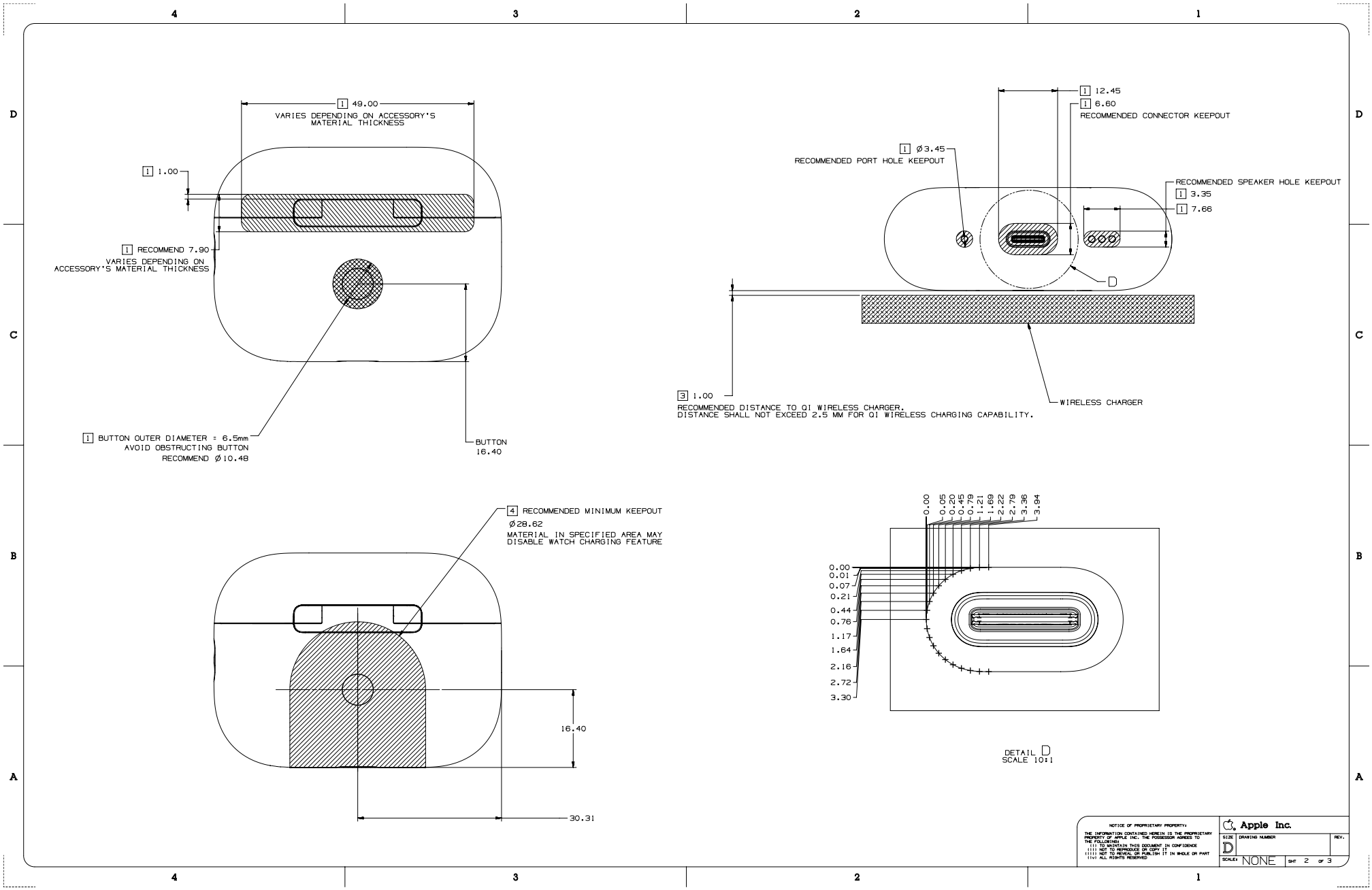

56.199 适用于 AirPods Pro（第 2 代）的 MagSafe 充电盒 (USB-C) 3/3

[英语]

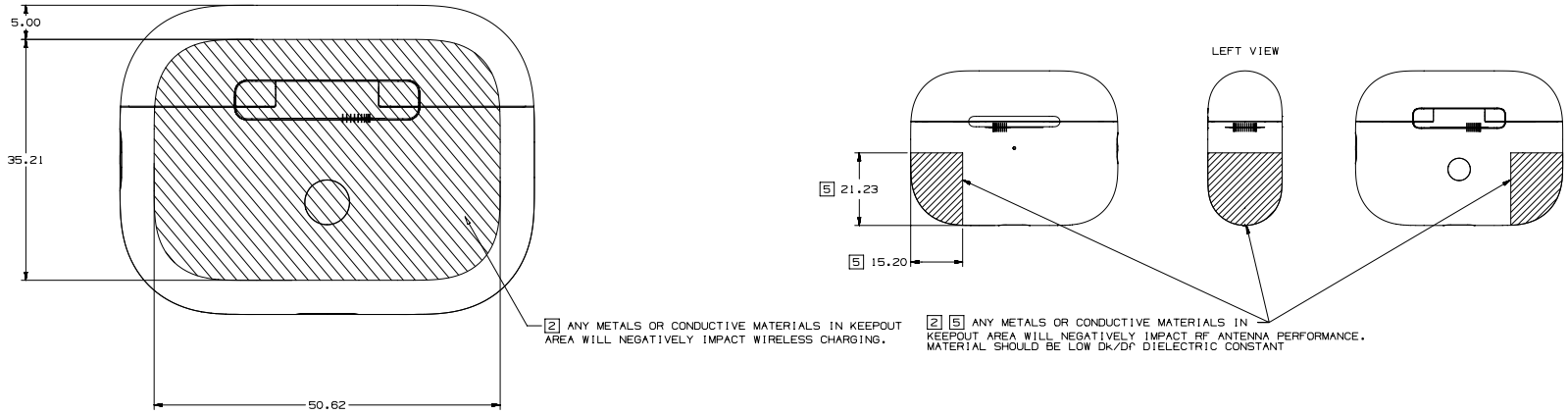

NOTICE OF PROPRIETARY PROPERTY:
THE INFORMATION CONTAINED HEREIN IS THE PROPRIETARY PROPERTY OF APPLE INC. THE POSSESSOR AGREES TO THE FOLLOWING:
(i) TO MAINTAIN THIS DOCUMENT IN CONFIDENCE
(ii) NOT TO REPRODUCE OR COPY IT
(iii) NOT TO REVEAL OR PUBLISH IT IN WHOLE OR PART
(iv) ALL RIGHTS RESERVED

Apple Inc.
SIZE D | DRAWING NUMBER | REV.
SCALE: NONE | SHT 3 OF 3

56.200 适用于 AirPods Pro（第 2 代）的 MagSafe 充电盒 1/3

[英语]

NOTES: (UNLESS OTHERWISE SPECIFIED)

1. ACCESSORIES INTRUDING INTO SHADED REGIONS WILL NEGATIVELY AFFECT PRODUCT PERFORMANCE.
2. TO ENSURE FULL FUNCTIONALITY, DO NOT OBSTRUCT THIS AREA WITH METAL OR OTHER CONDUCTIVE MATERIAL.
3. TO ENSURE FULL FUNCTIONALITY WITH MINIMAL IMPACT TO QI CHARGING PERFORMANCE, MINIMIZE ANY MATERIAL THICKNESS.
4. TO ENABLE CHARGING VIA APPLE WATCH CHARGER, IT IS RECOMMENDED THERE BE NO MATERIAL BETWEEN BACK OF DEVICE AND WATCH CHARGER.
5. PROTECTIVE CASES OR COVERS MAY DETUNE OR IMPACT RF & WIRELESS CHARGING PERFORMANCE.
   IMPACT IS HIGHLY DEPENDENT ON MATERIAL AND MATERIAL THICKNESS.
   HIGHLY RECOMMEND AVOIDING METAL MATERIAL AND FOLLOWING GUIDELINES IN THIS DOCUMENT TO MINIMIZE IMPACT.

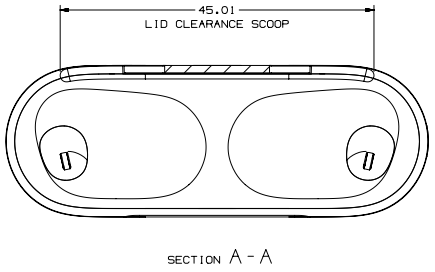

SECTION A - A

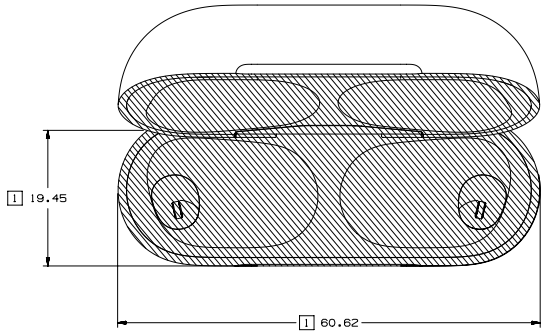

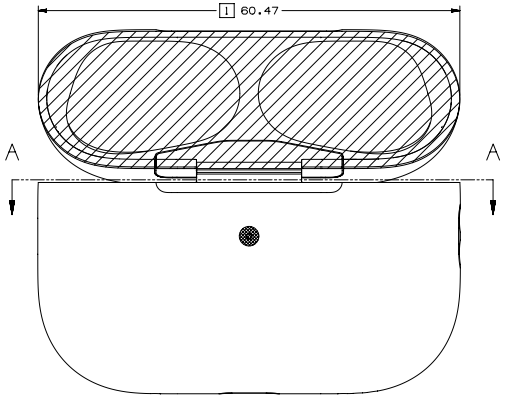

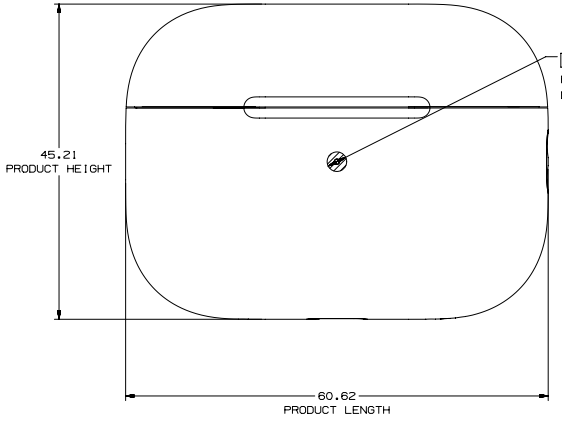

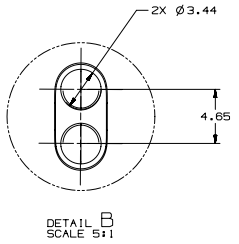

DETAIL B
SCALE 5:1

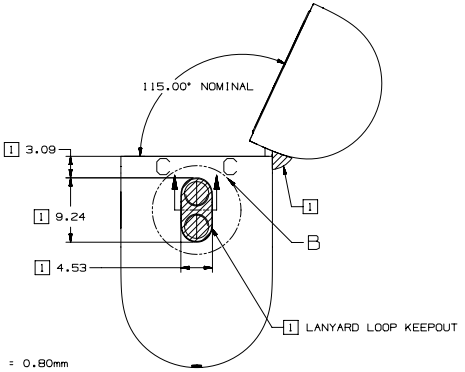

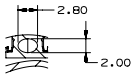

SECTION C - C
INTERNAL DIMENSIONS OF LANYARD LOOP

METRIC	Apple Inc.
DRAWTER / DATE	NOTICE OF PROPRIETARY PROPERTY: THE INFORMATION CONTAINED HEREIN IS THE PROPRIETARY PROPERTY OF APPLE INC. THE POSSESSOR AGREES TO THE FOLLOWING: (i) TO MAINTAIN THIS DOCUMENT IN CONFIDENCE (ii) NOT TO REPRODUCE OR COPY IT (iii) NOT TO REVEAL OR PUBLISH IT IN WHOLE OR PART (iv) ALL RIGHTS RESERVED
DESIGNER / DATE	
DIMENSIONS ARE IN MILLIMETERS TOLERANCES	TITLE: AIRPODS PRO GEN 2 WIRELESS CHARGING CASE
DO NOT SCALE DRAWINGS	DRAWING NUMBER / REV.
THIRD ANGLE PROJECTION / SIZE D / SCALE NONE / SHT	

NX GENERATED

56.201 适用于 AirPods Pro（第 2 代）的 MagSafe 充电盒 2/3

[英语]

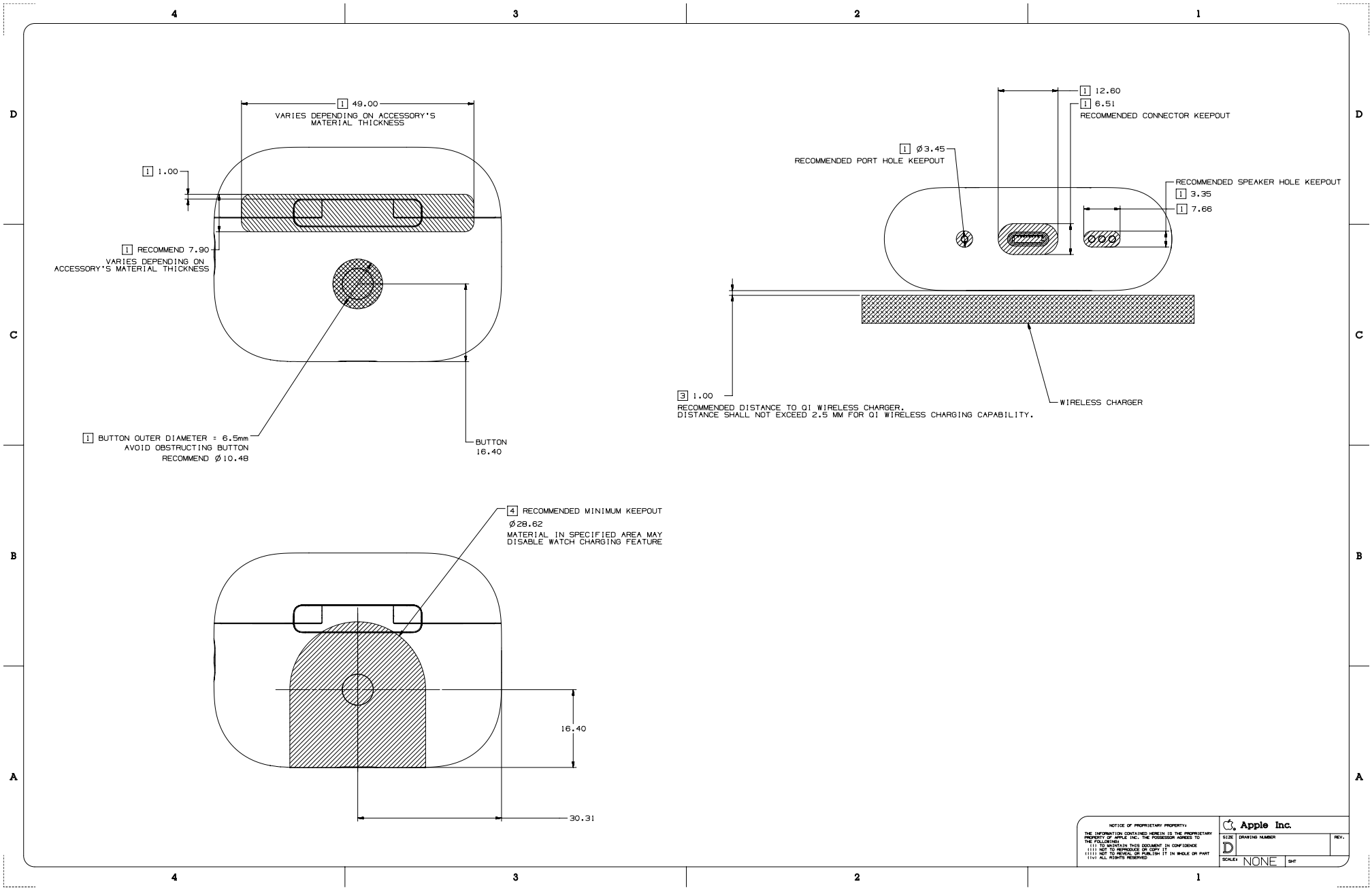

56.202 适用于 AirPods Pro（第 2 代）的 MagSafe 充电盒 3/3

[英语]

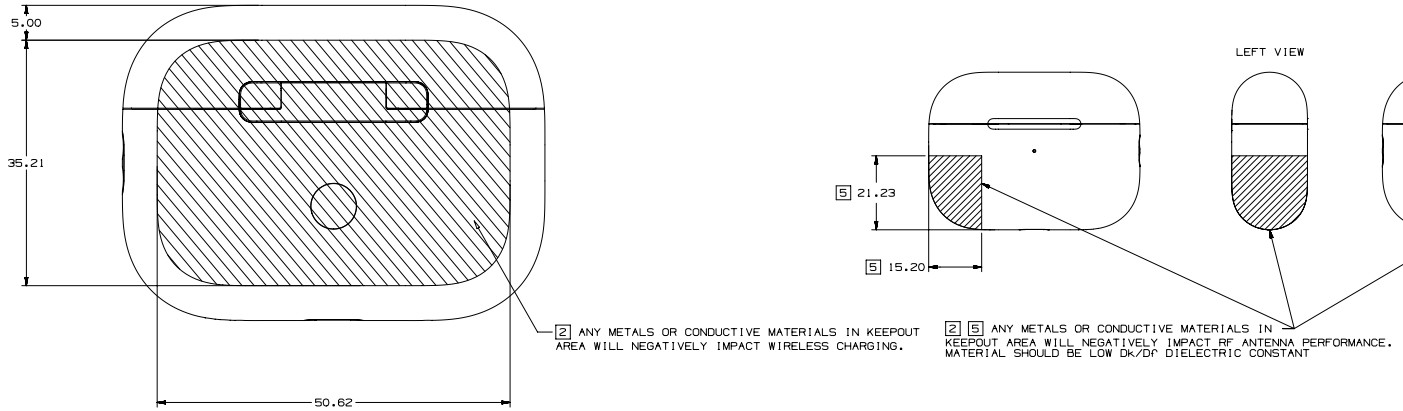

NOTICE OF PROPRIETARY PROPERTY:
THE INFORMATION CONTAINED HEREIN IS THE PROPRIETARY PROPERTY OF APPLE INC. THE POSSESSOR AGREES TO THE FOLLOWING:
(i) TO MAINTAIN THIS DOCUMENT IN CONFIDENCE
(ii) NOT TO REPRODUCE OR COPY IT
(iii) NOT TO REVEAL OR PUBLISH IT IN WHOLE OR PART
(iv) ALL RIGHTS RESERVED

Apple Inc.
SIZE D | DRAWING NUMBER | REV.
SCALE: NONE | SHT

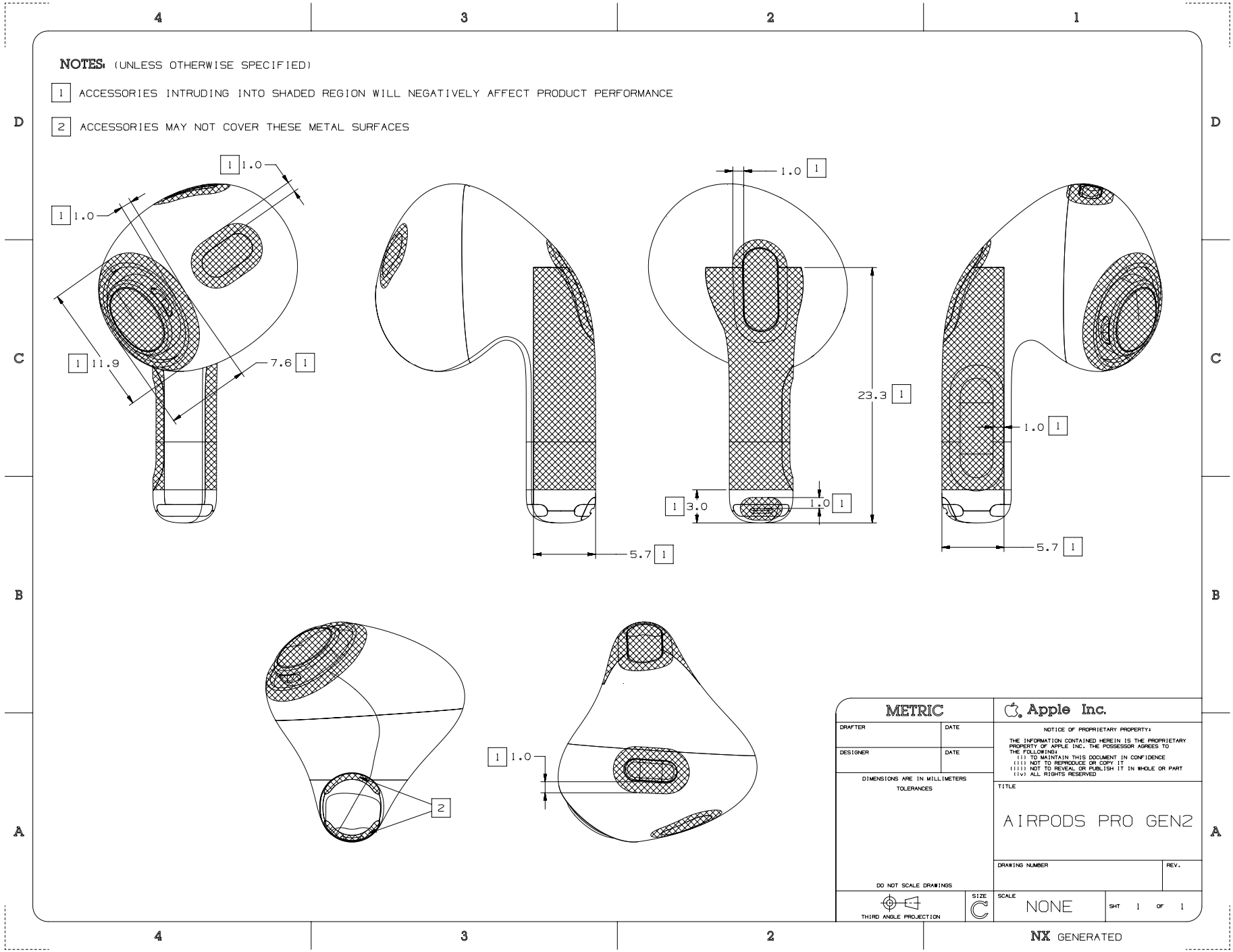
NOTES: (UNLESS OTHERWISE SPECIFIED)
1 ACCESSORIES INTRUDING INTO SHADED REGION WILL NEGATIVELY AFFECT PRODUCT PERFORMANCE
2 ACCESSORIES MAY NOT COVER THESE METAL SURFACES
1.0
11.9
7.6
5.7
23.3
3.0
METRIC
Apple Inc.
DRAFTER
DATE
DESIGNER
DIMENSIONS ARE IN MILLIMETERS
TOLERANCES
DO NOT SCALE DRAWINGS
THIRD ANGLE PROJECTION
NOTICE OF PROPRIETARY PROPERTY:
THE INFORMATION CONTAINED HEREIN IS THE PROPRIETARY PROPERTY OF APPLE INC. THE POSSESSOR AGREES TO THE FOLLOWING:
(i) TO MAINTAIN THIS DOCUMENT IN CONFIDENCE
(ii) NOT TO REPRODUCE OR COPY IT
(iii) NOT TO REVEAL OR PUBLISH IT IN WHOLE OR PART
(iv) ALL RIGHTS RESERVED
TITLE
AIRPODS PRO GEN2
DRAWING NUMBER
REV.
SIZE
C
SCALE
NONE
SHT 1 OF 1
NX GENERATED

56.204 适用于 AirPods（第 3 代）的 MagSafe 充电盒

[英语]

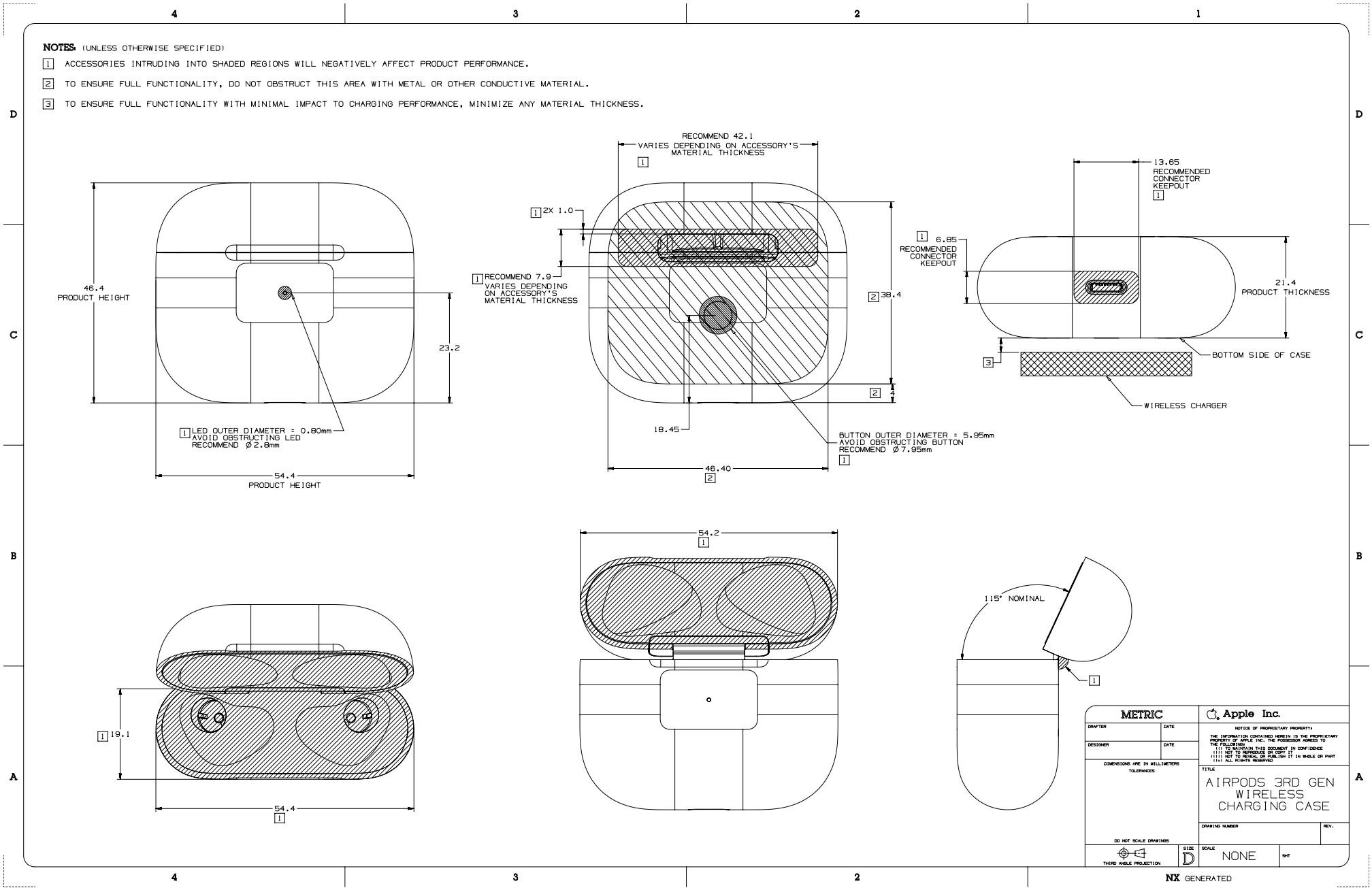

REV	ECO#	DESCRIPTION OF REVISION

NOTES: (UNLESS OTHERWISE SPECIFIED)

1. ACCESSORIES INTRUDING INTO SHADED REGION WILL NEGATIVELY AFFECT PRODUCT PERFORMANCE
2. ACCESSORIES MUST NOT COVER THESE METAL SURFACES

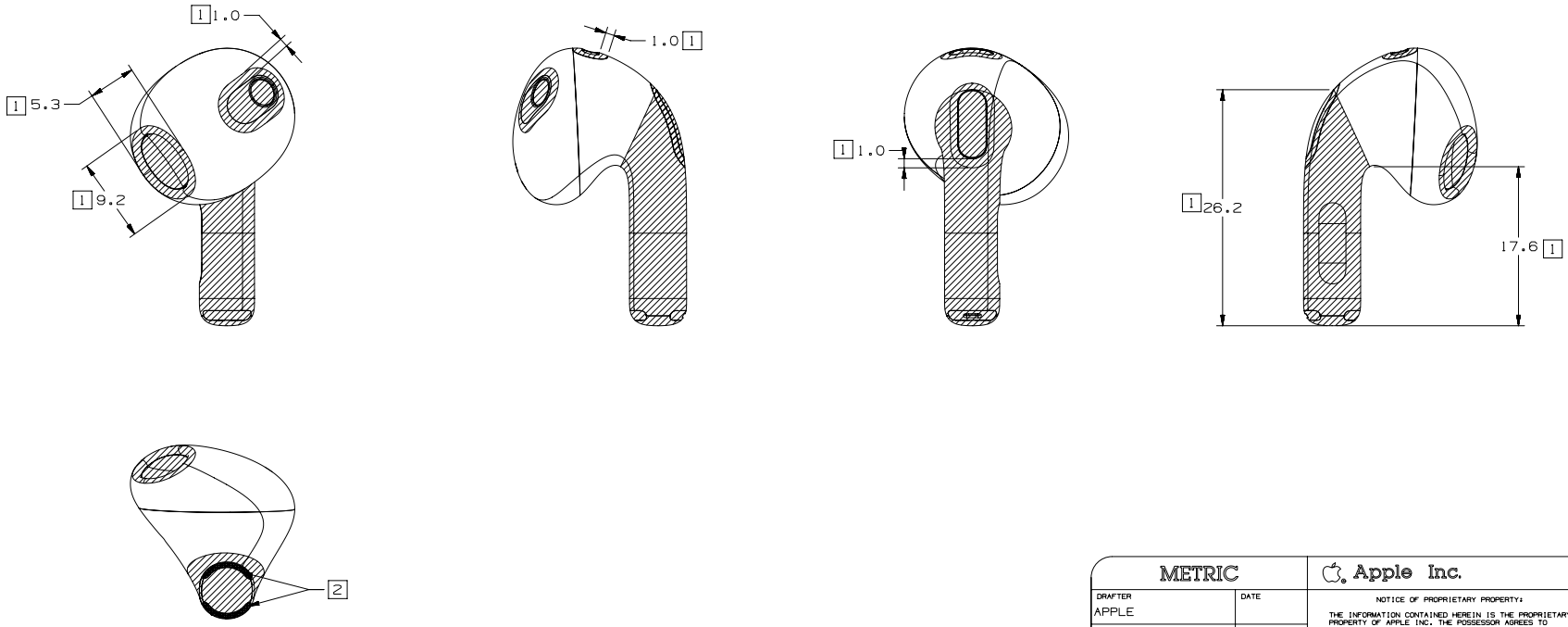

METRIC	Apple Inc.
DRAFTER: APPLE — DATE	NOTICE OF PROPRIETARY PROPERTY: THE INFORMATION CONTAINED HEREIN IS THE PROPRIETARY PROPERTY OF APPLE INC. THE POSSESSOR AGREES TO THE FOLLOWING: (i) TO MAINTAIN THIS DOCUMENT IN CONFIDENCE (ii) NOT TO REPRODUCE OR COPY IT (iii) NOT TO REVEAL OR PUBLISH IT IN WHOLE OR PART (iv) ALL RIGHTS RESERVED
DESIGNER: APPLE — DATE	
DIMENSIONS ARE IN MILLIMETERS TOLERANCES X.X ±0.2 X.XX ±0.10 X.XXX ±0.050 ANGLES ±0.5° DO NOT SCALE DRAWINGS	TITLE: AirPods (3rd generation)
THIRD ANGLE PROJECTION — SIZE C	DRAWING NUMBER — REV. 01
	SCALE: NONE — SHT 1 OF 1

NX GENERATED

56.206 适用于 AirPods Pro（第 1 代）的无线充电盒

[英语]

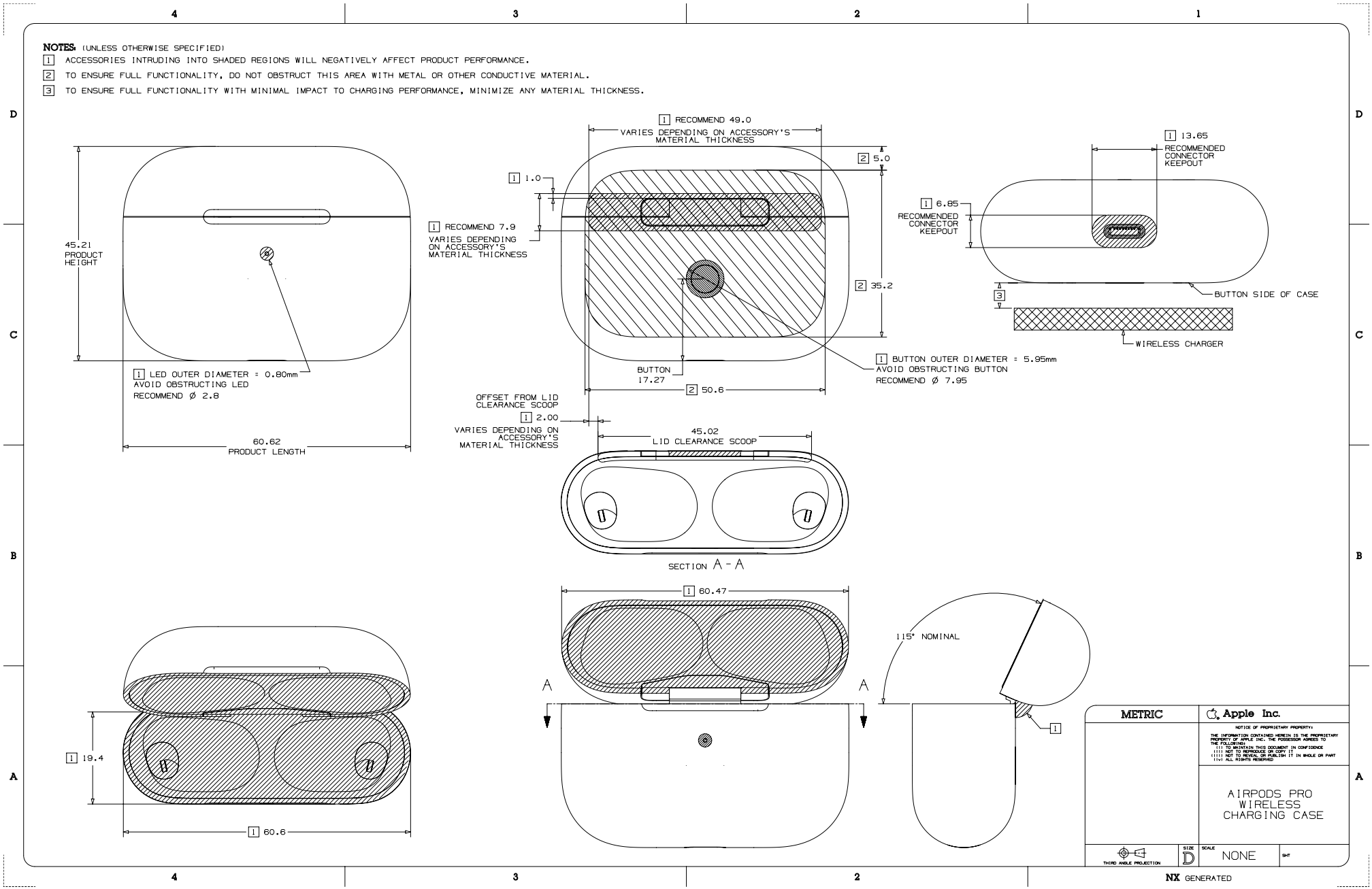

REV	ECO#	DESCRIPTION OF REVISION

NOTES: (UNLESS OTHERWISE SPECIFIED)

1 ACCESSORIES INTRUDING INTO SHADED REGIONS WILL NEGATIVELY AFFECT PRODUCT PERFORMANCE

2 ACCESSORIES MUST NOT COVER THESE METAL SURFACES

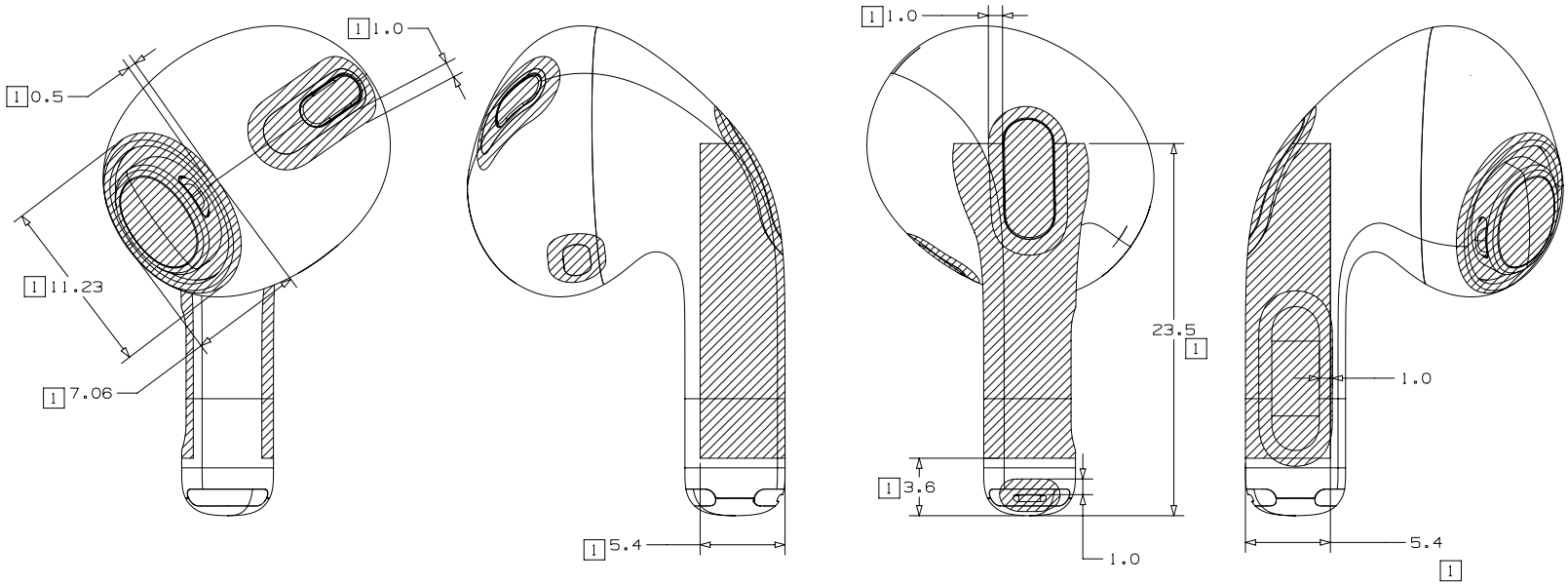

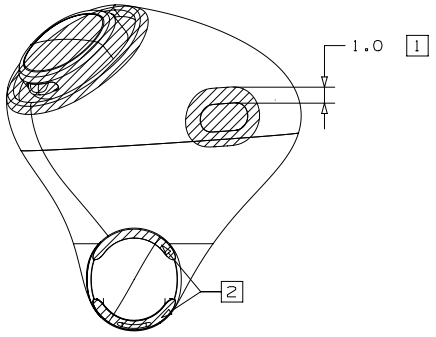

METRIC		Apple Inc.
DRAFTER APPLE INC.	DATE 03/05/20	NOTICE OF PROPRIETARY PROPERTY: THE INFORMATION CONTAINED HEREIN IS THE PROPRIETARY PROPERTY OF APPLE INC. THE POSSESSOR AGREES TO THE FOLLOWING: (i) TO MAINTAIN THIS DOCUMENT IN CONFIDENCE (ii) NOT TO REPRODUCE OR COPY IT (iii) NOT TO REVEAL OR PUBLISH IT IN WHOLE OR PART (iv) ALL RIGHTS RESERVED
DESIGNER APPLE INC.	DATE 03/05/20	
DIMENSIONS ARE IN MILLIMETERS TOLERANCES		TITLE: AIRPODS PRO
		DRAWING NUMBER — REV. 01
DO NOT SCALE DRAWINGS		
THIRD ANGLE PROJECTION	SIZE C	SCALE NONE — SHT 1 OF 1

NX GENERATED

56.208 适用于 AirPods 的无线充电盒

[英语]

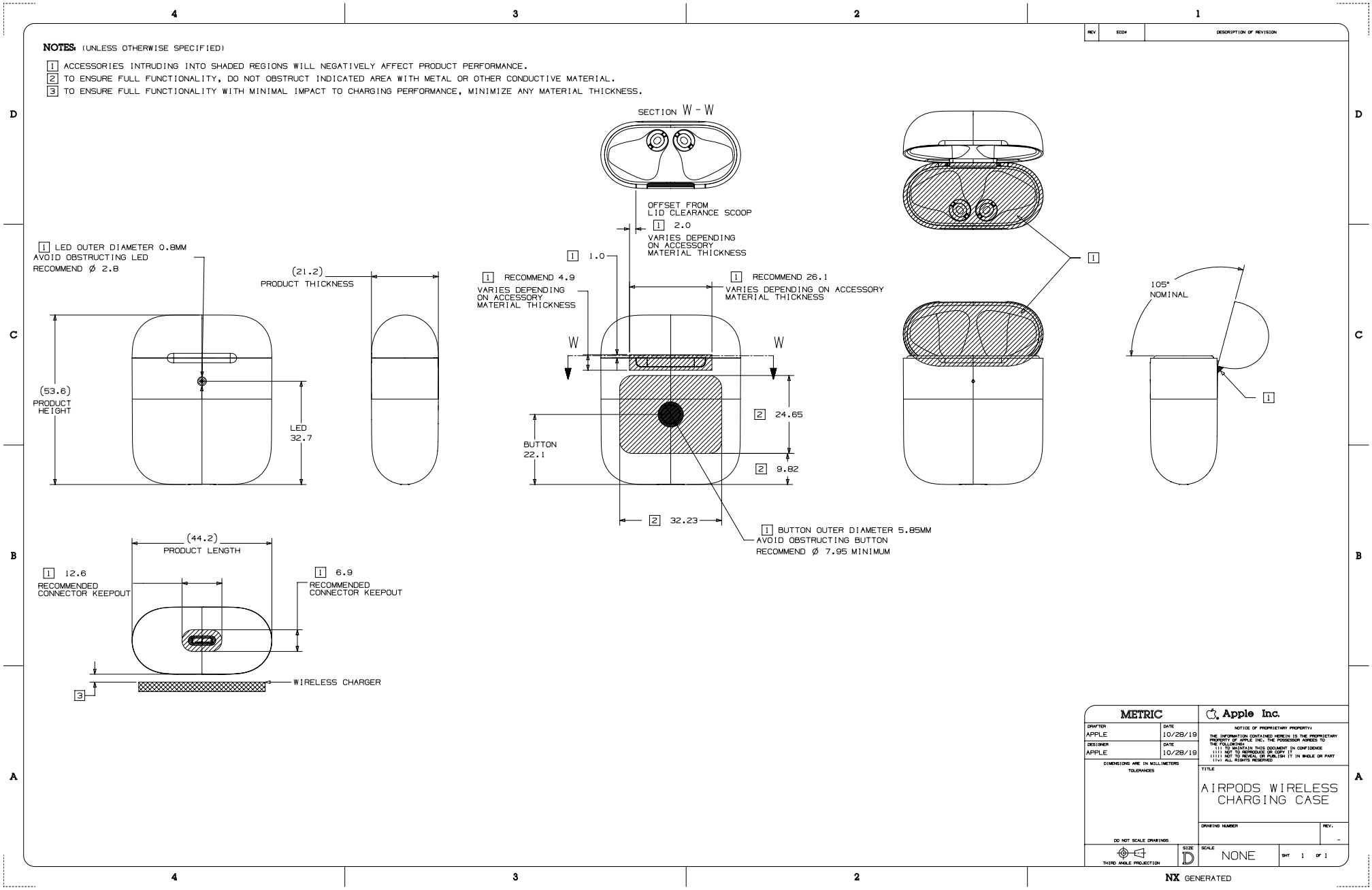

56.209 AirPods（第 1 代）和 AirPods（第 2 代）

[英语]

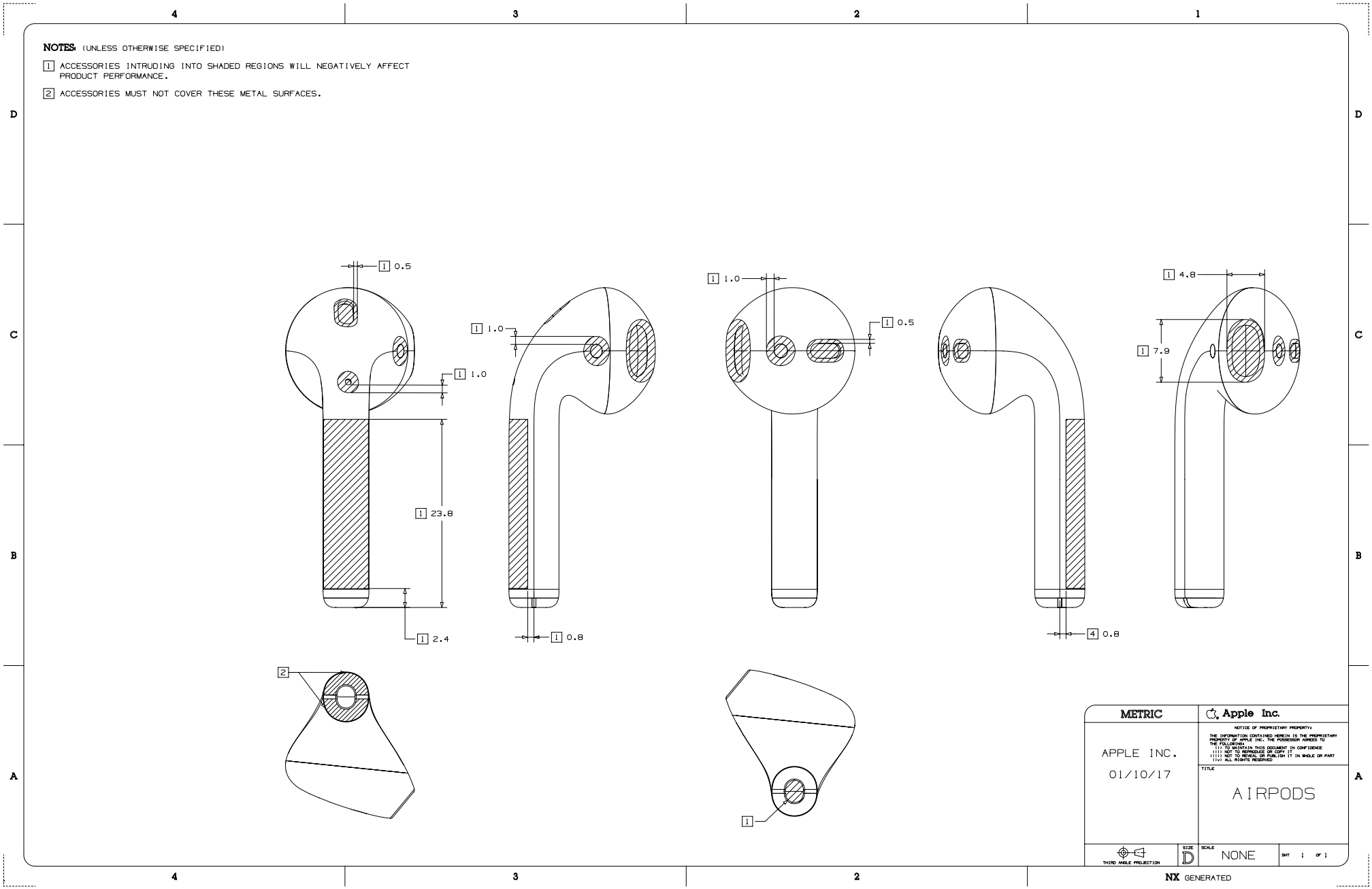

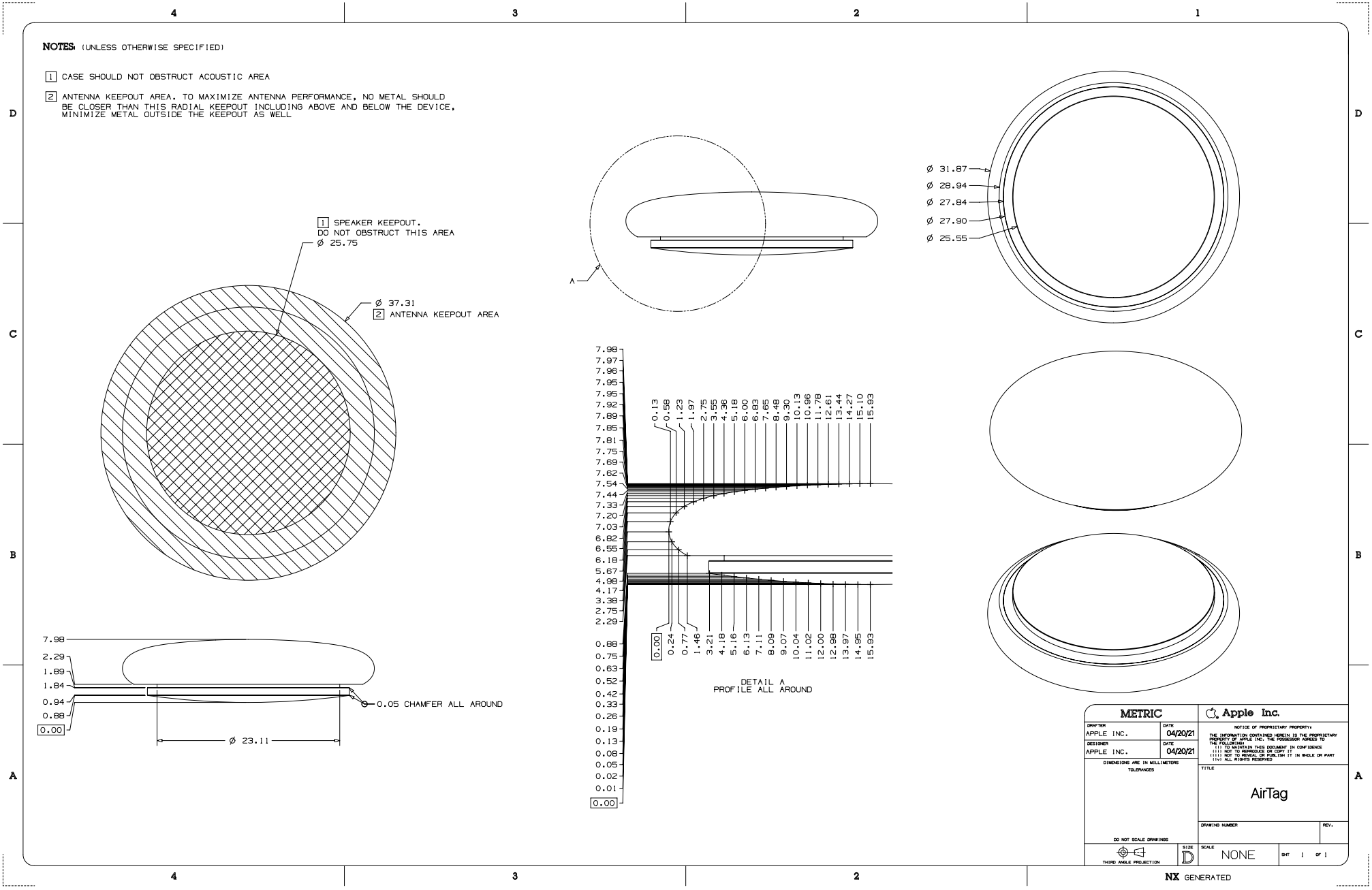
NOTES: (UNLESS OTHERWISE SPECIFIED)
1 CASE SHOULD NOT OBSTRUCT ACOUSTIC AREA
2 ANTENNA KEEPOUT AREA. TO MAXIMIZE ANTENNA PERFORMANCE, NO METAL SHOULD BE CLOSER THAN THIS RADIAL KEEPOUT INCLUDING ABOVE AND BELOW THE DEVICE, MINIMIZE METAL OUTSIDE THE KEEPOUT AS WELL
1 SPEAKER KEEPOUT. DO NOT OBSTRUCT THIS AREA
Ø 25.75
Ø 37.31
2 ANTENNA KEEPOUT AREA
Ø 31.87
Ø 28.94
Ø 27.84
Ø 27.90
Ø 25.55
A
7.98 2.29 1.89 1.84 0.94 0.88 0.00
0.05 CHAMFER ALL AROUND
Ø 23.11
7.98 7.97 7.96 7.95 7.95 7.92 7.89 7.85 7.81 7.75 7.69 7.62 7.54 7.44 7.33 7.20 7.03 6.82 6.55 6.18 5.67 4.98 4.17 3.38 2.75 2.29 0.88 0.75 0.63 0.52 0.42 0.33 0.26 0.19 0.13 0.08 0.05 0.02 0.01 0.00
0.13 0.58 1.23 1.97 2.75 3.55 4.36 5.18 6.00 6.83 7.65 8.48 9.30 10.13 10.96 11.78 12.61 13.44 14.27 15.10 15.93
0.00 0.24 0.77 1.46 3.21 4.18 5.16 6.13 7.11 8.09 9.07 10.04 11.02 12.00 12.98 13.97 14.95 15.93
DETAIL A
PROFILE ALL AROUND
METRIC
Apple Inc.
DRAFTER APPLE INC. DATE 04/20/21
DESIGNER APPLE INC. DATE 04/20/21
DIMENSIONS ARE IN MILLIMETERS
TOLERANCES
NOTICE OF PROPRIETARY PROPERTY:
THE INFORMATION CONTAINED HEREIN IS THE PROPRIETARY PROPERTY OF APPLE INC. THE POSSESSOR AGREES TO THE FOLLOWING:
(i) TO MAINTAIN THIS DOCUMENT IN CONFIDENCE
(ii) NOT TO REPRODUCE OR COPY IT
(iii) NOT TO REVEAL OR PUBLISH IT IN WHOLE OR PART
(iv) ALL RIGHTS RESERVED
TITLE
AirTag
DRAWING NUMBER
REV.
DO NOT SCALE DRAWING
THIRD ANGLE PROJECTION
SIZE D
SCALE NONE
SHT 1 OF 1
NX GENERATED

56.211 Apple TV 4K（第 3 代）

[英语]

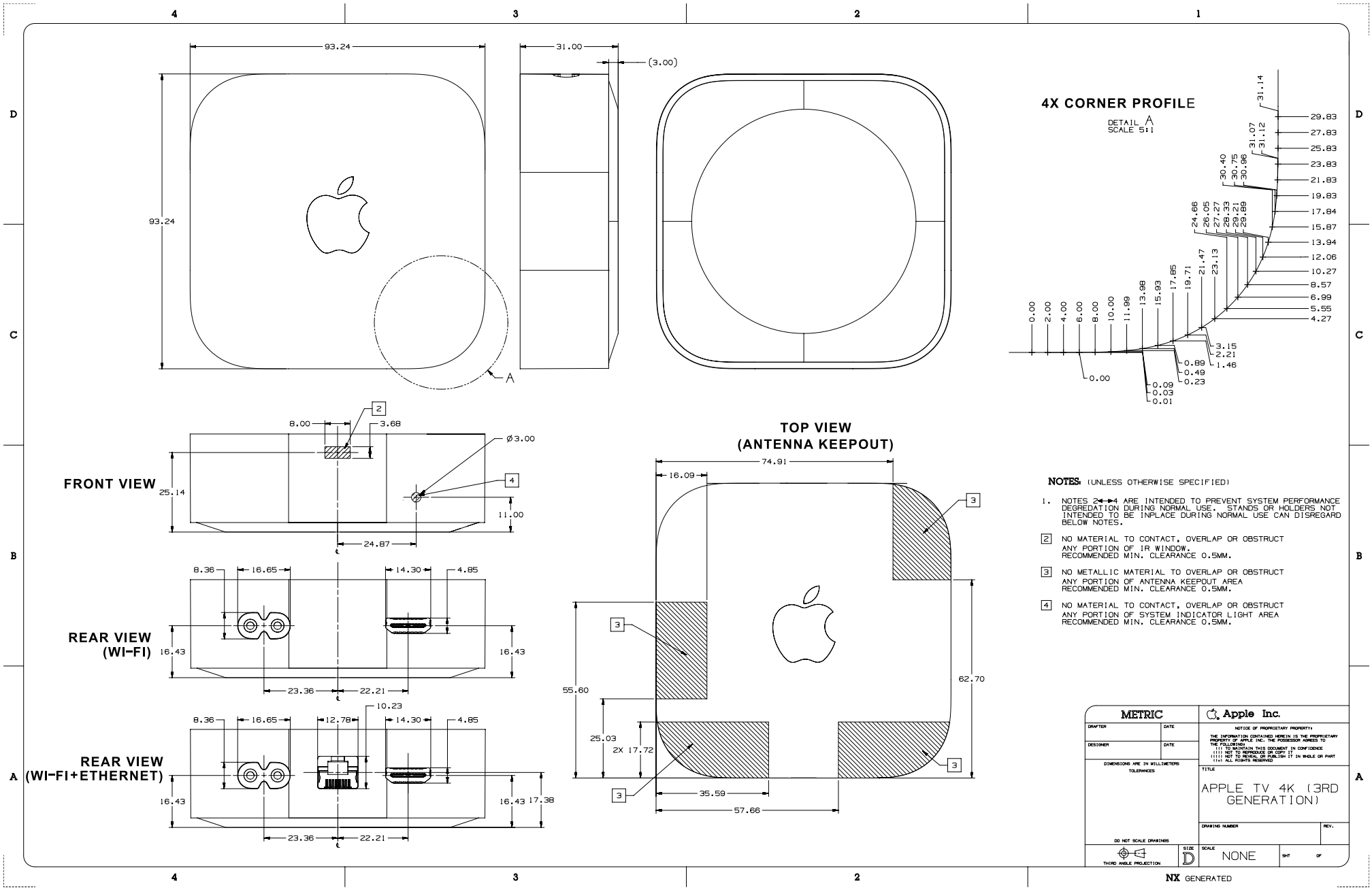

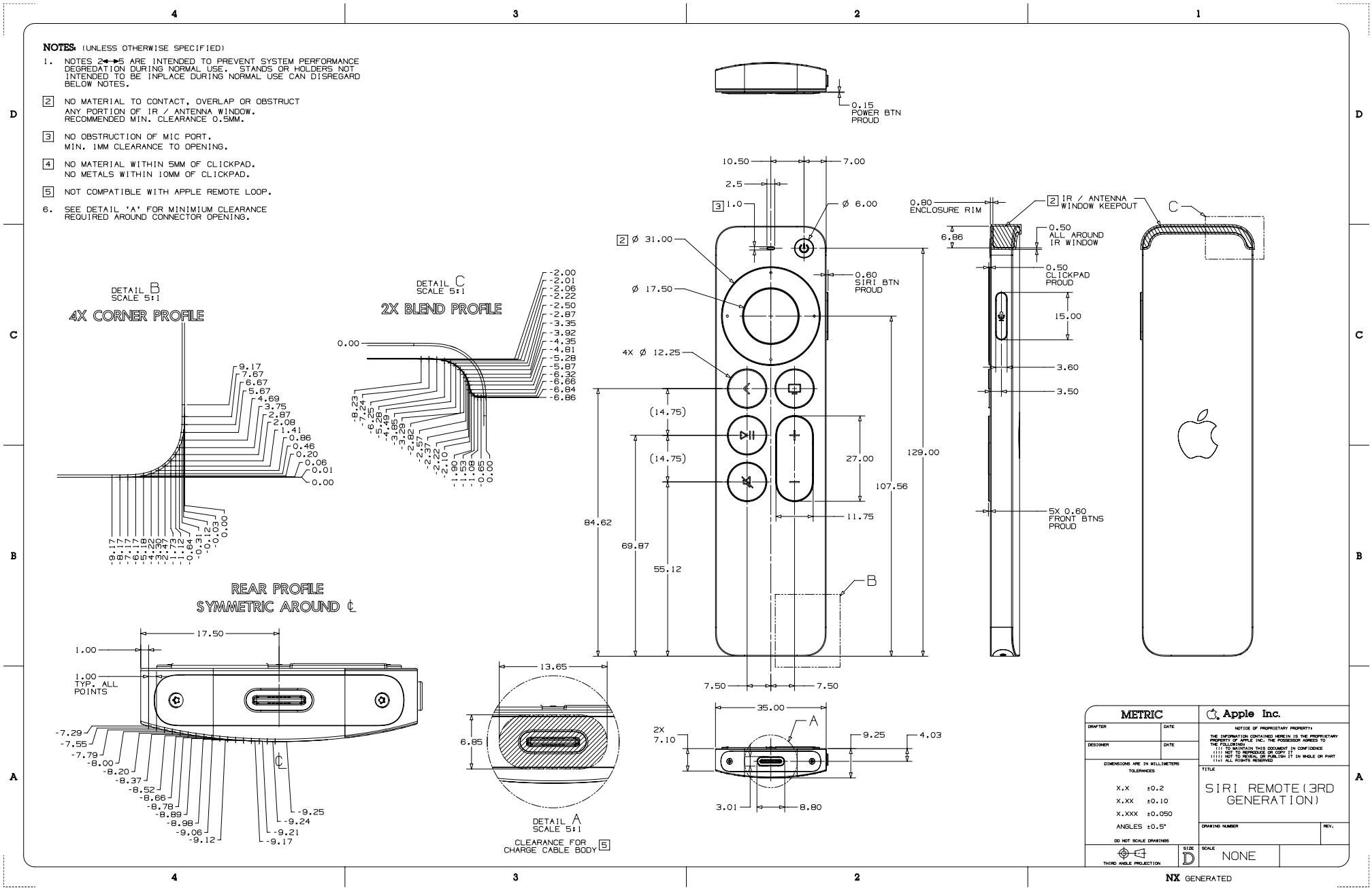
NOTES: (UNLESS OTHERWISE SPECIFIED)
1. NOTES 2 THRU 5 ARE INTENDED TO PREVENT SYSTEM PERFORMANCE DEGREDATION DURING NORMAL USE. STANDS OR HOLDERS NOT INTENDED TO BE INPLACE DURING NORMAL USE CAN DISREGARD BELOW NOTES.
2 NO MATERIAL TO CONTACT, OVERLAP OR OBSTRUCT ANY PORTION OF IR / ANTENNA WINDOW. RECOMMENDED MIN. CLEARANCE 0.5MM.
3 NO OBSTRUCTION OF MIC PORT. MIN. 1MM CLEARANCE TO OPENING.
4 NO MATERIAL WITHIN 5MM OF CLICKPAD. NO METALS WITHIN 10MM OF CLICKPAD.
5 NOT COMPATIBLE WITH APPLE REMOTE LOOP.
6. SEE DETAIL 'A' FOR MINIMUM CLEARANCE REQUIRED AROUND CONNECTOR OPENING.
0.15 POWER BTN PROUD
10.50
7.00
2.5
3 1.0
Ø 6.00
2 Ø 31.00
Ø 17.50
0.60 SIRI BTN PROUD
4X Ø 12.25
(14.75)
(14.75)
27.00
107.56
129.00
84.62
69.87
55.12
11.75
B
7.50
7.50
0.80 ENCLOSURE RIM
6.86
2 IR / ANTENNA WINDOW KEEPOUT
0.50 ALL AROUND IR WINDOW
0.50 CLICKPAD PROUD
15.00
3.60
3.50
5X 0.60 FRONT BTNS PROUD
C
DETAIL B SCALE 5:1
4X CORNER PROFILE
9.17
7.67
6.67
5.67
4.69
3.75
2.87
2.08
1.41
0.86
0.46
0.20
0.06
0.01
0.00
DETAIL C SCALE 5:1
2X BLEND PROFILE
0.00
-2.00
-2.01
-2.06
-2.22
-2.50
-2.50
-2.87
-3.35
-3.92
-4.35
-4.81
-5.28
-5.87
-6.32
-6.66
-6.84
-6.86
REAR PROFILE
SYMMETRIC AROUND ℄
17.50
1.00
1.00 TYP. ALL POINTS
-7.29
-7.55
-7.79
-8.00
-8.20
-8.37
-8.52
-8.66
-8.78
-8.89
-8.98
-9.06
-9.12
-9.17
-9.21
-9.24
-9.25
℄
13.65
6.85
DETAIL A SCALE 5:1
CLEARANCE FOR CHARGE CABLE BODY 5
35.00
2X 7.10
A
9.25
4.03
3.01
8.80
METRIC
Apple Inc.
DRAWTER
DESIGNER
DATE
NOTICE OF PROPRIETARY PROPERTY:
THE INFORMATION CONTAINED HEREIN IS THE PROPRIETARY PROPERTY OF APPLE INC. THE POSSESSOR AGREES TO THE FOLLOWING:
(i) TO MAINTAIN THIS DOCUMENT IN CONFIDENCE
(ii) NOT TO REPRODUCE OR COPY IT
(iii) NOT TO REVEAL OR PUBLISH IT IN WHOLE OR PART
(iv) ALL RIGHTS RESERVED
DIMENSIONS ARE IN MILLIMETERS
TOLERANCES
X.X ±0.2
X.XX ±0.10
X.XXX ±0.050
ANGLES ±0.5°
DO NOT SCALE DRAWING
TITLE
SIRI REMOTE(3RD GENERATION)
DRAWING NUMBER
REV.
THIRD ANGLE PROJECTION
SIZE D
SCALE NONE
NX GENERATED

修订历史记录 [英语]

本章介绍相对于《Apple 设备配件设计准则》的之前版本所做的更改，不包括风格和编辑上的更改。

新增内容 [英语]

- 操作 USB-C 接口（第 32 页）
- 保护壳（第 31 页）测试规程：
  - 自动对焦和光学图像防抖（第 59 页）
  - 指南针（第 60 页）
- 耳机（第 74 页）
- 外部存储（第 93 页）
- 待机显示支架（第 102 页）
- 配件供电 (USB-C)（第 115 页）
- 设备供电 (USB-C)（第 123 页）
- 外部配件协议（第 133 页）
- HID 耳机遥控器（第 134 页）
- 乐器数字接口 (MIDI)（第 160 页）
- 开发者预览：Apple USB-C 模拟耳机模块（第 209 页）
- 开发者预览：Apple 耳机遥控器和麦克风发射器（第 214 页）
- Accessory Developer Assistant (ADA)（第 230 页）
- iPhone 15 Pro Max 1/3（第 238 页）
- iPhone 15 Pro Max 2/3（第 239 页）
- iPhone 15 Pro Max 3/3（第 240 页）
- iPhone 15 Pro 1/3（第 241 页）
- iPhone 15 Pro 2/3（第 242 页）
- iPhone 15 Pro 3/3（第 243 页）
- iPhone 15 Plus 1/3（第 244 页）
- iPhone 15 Plus 2/3（第 245 页）
- iPhone 15 Plus 3/3（第 246 页）
- iPhone 15 1/3（第 247 页）
- iPhone 15 2/3（第 248 页）
- iPhone 15 3/3（第 249 页）
- Apple Watch Ultra 2，1/3（第 400 页）
- Apple Watch Ultra 2，2/3（第 401 页）

2023/10/10 | 版权所有 © 2023 Apple Inc. 保留所有权利。

- Apple Watch Ultra 2，3/3（第 402 页）
- Apple Watch Series 9（45 毫米）（第 403 页）
- Apple Watch Series 9（41 毫米）（第 404 页）
- 适用于 AirPods Pro（第 2 代）的 MagSafe 充电盒 (USB-C) 1/3（第 434 页）
- 适用于 AirPods Pro（第 2 代）的 MagSafe 充电盒 (USB-C) 2/3（第 435 页）
- 适用于 AirPods Pro（第 2 代）的 MagSafe 充电盒 (USB-C) 3/3（第 436 页）

更新内容 [英语]

- 所有配件（第 25 页）
- 保护壳（第 31 页）
- 屏幕覆膜（第 65 页）
- 键盘（第 78 页）
- 充电盒盖（第 94 页）
- 连续互通相机支架（第 105 页）
- 配件供电（闪电）（第 118 页）
- 设备供电（感应式）（第 129 页）
- USB 供电（第 182 页）
- iAP2（第 187 页）
- 连接参数（第 203 页）
- USB-C 插头（第 221 页）
- USB-C 插口（第 224 页）

2023/10/10 | 版权所有 © 2023 Apple Inc. 保留所有权利。

Accessory Design Guidelines for Apple Devices

Release R21

Contents

Overview 18

1. Introduction 19

2. Requirements 20

3. Terminology 21

3.1 Device 21
3.2 Accessory 21
3.3 Component 21
3.4 Control Surface 22
3.5 Direct User Action 22
3.6 Built-In Cable 22
3.7 Accessory Interface Specification 23
3.8 Apple MFi Licensing Program 23

Accessories 24

4. All Accessories 25

4.1 Scratches and Damage 25
4.2 Compliance Testing 25
4.3 Integrated USB Receptacles 25
4.4 User Supplied Cables and AC Power Adapters 25
4.5 TDMA Noise 26
4.6 Attachments 26
4.7 Magnetic Interference 26
4.8 Radio Frequency (RF) Performance 27
4.8.1 Materials and Coatings 28
4.8.2 Antenna Keep-Out 28
4.8.3 Over The Air (OTA) Transmission/Reception 28
4.8.4 Specific Absorption Rate (SAR) 29
4.8.5 Near Field Communication (NFC) 29
4.9 Thermal Management 30

2023-10-10 | Copyright © 2023 Apple Inc. All Rights Reserved.

4.10 Tripod Connections 30

5. Cases 31

5.1 Product Design 31
5.1.1 Device Protection 31
5.1.2 Access to Inputs and Interconnects 32
5.1.3 Dock Compatibility 36
5.1.4 Wireless Power and Rear Pockets 36
5.2 Acoustics 37
5.2.1 Call Quality 37
5.2.2 Speaker to Microphone Coupling 37
5.2.3 Speaker/Microphone Openings 37
5.3 Ambient Light Sensor and Proximity Sensor 40
5.4 Taptic Engine 40
5.5 Magnetic Interference 41
5.6 Touch ID 41
5.7 Camera 41
5.7.1 Geometry 41
5.7.2 Color 42
5.7.3 Surface Finish 42
5.7.4 Image Degradation Examples 42
5.8 Reliability 43
5.8.1 Device Insertion and Removal 43
5.8.2 Colorfastness 44
5.9 Environmental 44
5.10 Test Procedures 44
5.10.1 Device Models 44
5.10.2 Product Design 58
5.10.3 Taptic Engine 60
5.10.4 Touch ID Sensor Overlays 60
5.10.5 Camera 61
5.10.6 Compass 62
5.10.7 Acoustics 63

6. Covers 66

6.1 Magnetic Interference 66
6.2 Smart Covers 66

7. Screen Overlays 68

7.1 Product Design 68

2023-10-10 | Copyright © 2023 Apple Inc. All Rights Reserved.

7.1.1 Optical Transmission 68
7.1.2 Infrared Transmission 69
7.1.3 Transmission Haze 69
7.1.4 Dynamic Island 69
7.2 Edge Swipe and Edge Press Gestures 70

8. Camera Attachments 71
8.1 Magnetic Interference 71

9. Adapters 72
9.1 Headset Adapters (Lightning to 3.5 mm) 72
9.2 USB-A/USB-C to Lightning Headset Adapters 72
9.3 Ethernet Adapters (Lightning to RJ45) 72
9.4 Lightning to USB Micro-B Adapters 73

10. AC Power Adapters 74
10.1 Converter Switching Frequencies 74
10.2 YCAP AC Capacitor 74
10.3 Impedance Stability 74
10.4 Fuse Protection 75
10.5 Short Circuit Response 76

11. Battery Packs 77

12. Headsets 78
12.1 Product Design 78
12.2 Audio Interface 78
12.3 Remote Controls 78
12.4 USB-C Headset Identification 79

13. Strobes 80

14. Keyboards 82
14.1 Requirements 82
14.2 Examples 87
14.2.1 Example HID Report Descriptor 87

15. Trackpads 88
15.1 Requirements 88
15.1.1 Integration with Keyboards 88

2023-10-10 | Copyright © 2023 Apple Inc. All Rights Reserved.

15.1.2 HID Report Descriptor 88
15.1.3 Coexistence 89
15.1.4 Performance 89
15.1.5 Input Confidence 90
15.1.6 Click to Wake 90
15.2 Examples 91
15.2.1 Example HID Report Descriptor 91
15.2.2 Example Trackpad 94

16. External Storage 97
16.1 Requirements 97
16.2 ProRes 4K up to 60 fps 97

17. AirPods Accessories 98
17.1 Charging Case Covers 98
17.2 Chargers 98
17.3 Test Procedures 99
17.3.1 Power 99

18. Watch Bands 101
18.1 Requirements 101
18.2 Apple Watch Band Interface 103
18.3 Example Apple Watch Lug Assembly 104
18.4 Example Apple Watch Lug 106

19. StandBy Mounts 107
19.1 Product Design 108
19.2 Test Procedures 109
19.2.1 Equipment 109
19.2.2 Enable StandBy 109
19.2.3 Product Design 109

20. Continuity Camera Mounts 110
20.1 Product Design 111
20.2 Apple TV Mount 112
20.3 MacBook Mount 113
20.4 iMac or Display Mount 114
20.5 Test Procedures 115
20.5.1 Equipment 115
20.5.2 Enable Continuity Camera on Apple TV 115

2023-10-10 | Copyright © 2023 Apple Inc. All Rights Reserved.

20.5.3 Enable Continuity Camera on Mac 115
20.5.4 Product Design 116
20.5.5 Center Stage 116
20.5.6 Desk View 117

Features 118

21. Bluetooth Accessory Identification 119
21.1 HFP Command AT+XAPL 119

22. Accessory Power (USB-C) 121
22.1 Available Current 121
22.2 Fast Role Swap (FRS) 122
22.3 Test Procedures 122
22.3.1 Maximum Accessory Power 122

23. Accessory Power (Lightning) 125

24. App Discovery 126

25. App Launch 127

26. App Match 128

27. Bluetooth Headset Battery Level Indication 130
27.1 HFP Command AT+IPHONEACCEV 130

28. Device Power (USB-C) 131
28.1 External Power Source 131
28.2 Power State Changes 132

29. Device Power (Lightning) 133
29.1 Direct Power Source 133
29.2 External Power Source 133
29.3 Declaring Capability 134
29.4 Providing Power using USB Connectors 134
29.5 Labeling Multiple Connectors 134
29.6 Fast Charge for iPhone (20 W) 135
29.7 Overcurrent and Short Circuit Protection 136

2023-10-10 | Copyright © 2023 Apple Inc. All Rights Reserved.

29.8 Overcurrent and Short Circuit Protection Resets 137
29.9 Power State Changes 137

30. Device Power (Inductive) 138
30.1 Qi Wireless Power 138
30.2 MagSafe 139
30.3 Electromagnetic Compatibility (EMC) 139

31. External Accessory Protocol 142

32. HID Headset Remote 143
32.1 Requirements 143
32.2 Examples 144
32.2.1 Headset Remote Example HID Report Descriptor (Telephony) 144
32.2.2 Headset Remote Example HID Report Descriptor (Media Playback) 144
32.2.3 Headset Remote Example HID Report Descriptor (Telephony and Media Playback) 145

33. Location Information 147

34. MagSafe Attach 148
34.1 MagSafe Case Magnet Array 149
34.1.1 Product Design 149
34.1.2 Mechanical 149
34.1.3 Magnetic Interference 155
34.2 MagSafe Accessory Magnet Array 156
34.2.1 Product Design 156
34.2.2 Mechanical 156
34.3 MagSafe Accessory Enclosure Geometry 163
34.4 Test Procedures 164
34.4.1 MagSafe Case Magnet Array 164
34.4.2 MagSafe Accessory Magnet Array 168

35. Media Library Access 169

36. Musical Instrument Digital Interface (MIDI) 170
36.1 Requirements 170
36.2 Test Procedures 170

37. Now Playing Updates 171

2023-10-10 | Copyright © 2023 Apple Inc. All Rights Reserved.

38. Out-of-Band Bluetooth Pairing 172

39. Siri 173
39.1 Enabling Custom Siri Commands 173
39.2 Obtaining Siri Availability Information 173
39.2.1 Obtaining Status Information at Connection 173
39.2.2 Receiving Siri Availability Updates from the Device 174
39.3 Initiating a Siri Session 175
39.3.1 Initiating a Session from the Accessory 175
39.3.2 Initiating a Session from the Device 176
39.3.3 Ending a Session from the Accessory 177
39.4 Siri Eyes Free Mode 177
39.4.1 HFP Command AT+APLEFM 178
39.5 Improving Voice Recognition 178
39.5.1 Wide Band Speech Support 179
39.6 Optimizing the Siri Experience 179
39.7 Common Siri Applications 180
39.7.1 Initialization Procedure After Connection is Established 180
39.7.2 Phone Dialing Using Siri 181
39.7.3 Audio Routing and Media Playback Using Siri 181
39.7.4 Turn-By-Turn Directions Using Siri 182
39.8 User Interaction with Siri Eyes Free in a Vehicle 182
39.9 Enabling/Disabling Siri from the Device 184
39.10 Test Procedures 185
39.10.1 Siri Eyes Free 185

40. Wi-Fi Information Sharing 190

Protocols 191

41. USB Power Capability Vendor Request 192

42. USB D+/D- Resistor Networks 193
42.1 Declaring Power Source Capability 193
42.2 Identifying Power Source Current Limit 194

43. USB Power Delivery 196

44. USB Type-C Current 197

2023-10-10 | Copyright © 2023 Apple Inc. All Rights Reserved.

45. Advanced Audio Distribution Profile (A2DP) 198
45.1 Bluetooth A2DP Specification 198
45.1.1 AVDTP Transactions 198
45.2 SubBand Codec (SBC) 198
45.3 MPEG 2/4 AAC Codecs 199
45.4 Test Procedures 200
45.4.1 Audio Quality 200
45.4.2 Audio Switching 200
45.4.3 HFP Interaction 200
45.4.4 Siri 201
45.4.5 Video Playback 201

46. iAP2 202

47. Human Interface Device (HID) 203
47.1 Requirements 203
47.1.1 Report Descriptor 204
47.1.2 USB 204
47.2 Test Procedures 204
47.2.1 General 204

Transports 206

48. Bluetooth 207
48.1 Enhanced Data Rate 207
48.2 Adaptive Frequency Hopping 207
48.3 Sniff Mode for Low Power Consumption 207
48.4 Role and Topology Management 208
48.5 Extended Inquiry Response 209
48.6 Secure Simple Pairing 209
48.7 Pairing Button 209
48.8 Class of Device (CoD) 210
48.9 Link Supervision Timeout 210
48.10 Delay Reporting 210
48.11 Profiles 210
48.11.1 Device ID Profile (DID) 210
48.11.2 Service Discovery Protocol (SDP) 211
48.11.3 Hands-Free Profile (HFP) 211
48.11.4 Message Access Profile (MAP) 213

2023-10-10 | Copyright © 2023 Apple Inc. All Rights Reserved.

48.11.5 Audio/Video Remote Control Profile (AVRCP) 214
48.11.6 Advanced Audio Distribution Profile (A2DP) 216
48.12 Audio Routing 216
48.12.1 Audio Data Received using HFP Profile 216
48.12.2 Audio Data Received using A2DP Profile 217
48.13 HID 218

49. Bluetooth Low Energy (BLE) 219
49.1 Role 219
49.2 Advertising Channels 219
49.3 Advertising PDU 219
49.4 Advertising Data 219
49.5 Advertising Interval 220
49.6 Connection Parameters 221
49.7 Data Packet Length Extension 221
49.8 Privacy 222
49.9 Permissions 222
49.10 Pairing 222
49.11 MTU Size 223
49.12 Services 223
49.12.1 Generic Access Profile Service 223
49.12.2 Generic Attribute Profile Service 223
49.12.3 Device Information Service 224
49.12.4 Available Services 224
49.13 GATT Server 224

Modules 226

50. Apple USB-C Analog Headset Module 227
50.1 Overview 227
50.1.1 Additional Specifications & Support 228
50.2 Mechanical 228
50.3 Pad Assignments 228
50.4 Electrical 229
50.5 C125 Dimensions 230

Components 231

2023-10-10 | Copyright © 2023 Apple Inc. All Rights Reserved.

51. Apple Headset Remote and Microphone Transmitter 232
51.1 Requirements 232

Connectors 238

52. USB-A Receptacle 239
52.1 Mechanical 239
52.2 Electrical 239

53. USB-C Plug 240
53.1 Mechanical 240
53.2 Electrical 241
53.2.1 Drawing Power 241
53.2.2 Providing Power 242
53.3 Test Procedures 242
53.3.1 Mechanical 242
53.3.2 Connector Test ID 242
53.3.3 Drawing Power 242

54. USB-C Receptacle 244
54.1 Mechanical 244
54.2 Electrical 244
54.2.1 Drawing Power 244
54.2.2 Providing Power 245
54.3 USB-C receptacle accessory keep-out 246
54.4 Test Procedures 247
54.4.1 Connector Test ID 247
54.4.2 Drawing Power 247
54.4.3 Providing Power 248

Tools 249

55. Accessory Developer Assistant (ADA) 250
55.1 Autofocus & Optical Image Stabilization Test Profile 250

References 252

2023-10-10 | Copyright © 2023 Apple Inc. All Rights Reserved.

56. Device Dimensional Drawings 253

56.1 iPhone 15 Pro Max 1 of 3 259
56.2 iPhone 15 Pro Max 2 of 3 260
56.3 iPhone 15 Pro Max 3 of 3 261
56.4 iPhone 15 Pro 1 of 3 262
56.5 iPhone 15 Pro 2 of 3 263
56.6 iPhone 15 Pro 3 of 3 264
56.7 iPhone 15 Plus 1 of 3 265
56.8 iPhone 15 Plus 2 of 3 266
56.9 iPhone 15 Plus 3 of 3 267
56.10 iPhone 15 1 of 3 268
56.11 iPhone 15 2 of 3 269
56.12 iPhone 15 3 of 3 270
56.13 iPhone 14 Pro Max 1 of 3 271
56.14 iPhone 14 Pro Max 2 of 3 272
56.15 iPhone 14 Pro Max 3 of 3 273
56.16 iPhone 14 Pro 1 of 3 274
56.17 iPhone 14 Pro 2 of 3 275
56.18 iPhone 14 Pro 3 of 3 276
56.19 iPhone 14 Plus 1 of 3 277
56.20 iPhone 14 Plus 2 of 3 278
56.21 iPhone 14 Plus 3 of 3 279
56.22 iPhone 14 1 of 3 280
56.23 iPhone 14 2 of 3 281
56.24 iPhone 14 3 of 3 282
56.25 iPhone 13 Pro Max 1 of 2 283
56.26 iPhone 13 Pro Max 2 of 2 284
56.27 iPhone 13 Pro 1 of 2 285
56.28 iPhone 13 Pro 2 of 2 286
56.29 iPhone 13 1 of 2 287
56.30 iPhone 13 2 of 2 288
56.31 iPhone 13 mini 1 of 2 289
56.32 iPhone 13 mini 2 of 2 290
56.33 iPhone 12 Pro Max 1 of 2 291
56.34 iPhone 12 Pro Max 2 of 2 292
56.35 iPhone 12 Pro 1 of 2 293
56.36 iPhone 12 Pro 2 of 2 294
56.37 iPhone 12 1 of 2 295
56.38 iPhone 12 2 of 2 296

2023-10-10 | Copyright © 2023 Apple Inc. All Rights Reserved.

56.39 iPhone 12 mini 1 of 2 297
56.40 iPhone 12 mini 2 of 2 298
56.41 iPhone SE (3rd generation) and iPhone SE (2nd generation) 299
56.42 iPhone 11 Pro Max 300
56.43 iPhone 11 Pro 301
56.44 iPhone 11 302
56.45 iPhone XS Max 303
56.46 iPhone XS 304
56.47 iPhone XR 305
56.48 iPhone X 306
56.49 iPhone 8 Plus 307
56.50 iPhone 8 308
56.51 iPhone 7 Plus 309
56.52 iPhone 7 310
56.53 iPhone 6s Plus 311
56.54 iPhone 6s 312
56.55 iPhone 6 Plus 313
56.56 iPhone 6 314
56.57 iPhone 5s and iPhone SE 315
56.58 iPhone 5c 316
56.59 iPhone 5 317
56.60 iPad Pro 12.9-inch (6th generation) 1 of 5 318
56.61 iPad Pro 12.9-inch (6th generation) 2 of 5 319
56.62 iPad Pro 12.9-inch (6th generation) 3 of 5 320
56.63 iPad Pro 12.9-inch (6th generation) 4 of 5 321
56.64 iPad Pro 12.9-inch (6th generation) 5 of 5 322
56.65 iPad Pro 11-inch (4th generation) 1 of 5 323
56.66 iPad Pro 11-inch (4th generation) 2 of 5 324
56.67 iPad Pro 11-inch (4th generation) 3 of 5 325
56.68 iPad Pro 11-inch (4th generation) 4 of 5 326
56.69 iPad Pro 11-inch (4th generation) 5 of 5 327
56.70 iPad (10th generation) 1 of 6 328
56.71 iPad (10th generation) 2 of 6 329
56.72 iPad (10th generation) 3 of 6 330
56.73 iPad (10th generation) 4 of 6 331
56.74 iPad (10th generation) 5 of 6 332
56.75 iPad (10th generation) 6 of 6 333
56.76 iPad Air (5th generation) and iPad Air (4th generation) 1 of 5 334
56.77 iPad Air (5th generation) and iPad Air (4th generation) 2 of 5 335

2023-10-10 | Copyright © 2023 Apple Inc. All Rights Reserved.

56.78 iPad Air (5th generation) and iPad Air (4th generation) 3 of 5 336
56.79 iPad Air (5th generation) and iPad Air (4th generation) 4 of 5 337
56.80 iPad Air (5th generation) and iPad Air (4th generation) 5 of 5 338
56.81 iPad mini (6th generation) 1 of 6 339
56.82 iPad mini (6th generation) 2 of 6 340
56.83 iPad mini (6th generation) 3 of 6 341
56.84 iPad mini (6th generation) 4 of 6 342
56.85 iPad mini (6th generation) 5 of 6 343
56.86 iPad mini (6th generation) 6 of 6 344
56.87 iPad (9th generation), iPad (8th generation) and iPad (7th generation) 1 of 4 345
56.88 iPad (9th generation), iPad (8th generation) and iPad (7th generation) 2 of 4 346
56.89 iPad (9th generation), iPad (8th generation) and iPad (7th generation) 3 of 4 347
56.90 iPad (9th generation), iPad (8th generation) and iPad (7th generation) 4 of 4 348
56.91 iPad Pro 12.9-inch (5th generation) 1 of 5 349
56.92 iPad Pro 12.9-inch (5th generation) 2 of 5 350
56.93 iPad Pro 12.9-inch (5th generation) 3 of 5 351
56.94 iPad Pro 12.9-inch (5th generation) 4 of 5 352
56.95 iPad Pro 12.9-inch (5th generation) 5 of 5 353
56.96 iPad Pro 11-inch (3rd generation) 1 of 5 354
56.97 iPad Pro 11-inch (3rd generation) 2 of 5 355
56.98 iPad Pro 11-inch (3rd generation) 3 of 5 356
56.99 iPad Pro 11-inch (3rd generation) 4 of 5 357
56.100 iPad Pro 11-inch (3rd generation) 5 of 5 358
56.101 iPad Pro 12.9-inch (4th generation) 1 of 5 359
56.102 iPad Pro 12.9-inch (4th generation) 2 of 5 360
56.103 iPad Pro 12.9-inch (4th generation) 3 of 5 361
56.104 iPad Pro 12.9-inch (4th generation) 4 of 5 362
56.105 iPad Pro 12.9-inch (4th generation) 5 of 5 363
56.106 iPad Pro 11-inch (2nd generation) 1 of 5 364
56.107 iPad Pro 11-inch (2nd generation) 2 of 5 365
56.108 iPad Pro 11-inch (2nd generation) 3 of 5 366
56.109 iPad Pro 11-inch (2nd generation) 4 of 5 367
56.110 iPad Pro 11-inch (2nd generation) 5 of 5 368
56.111 iPad Air (3rd generation) with Wi-Fi 1 of 3 369
56.112 iPad Air (3rd generation) with Wi-Fi 2 of 3 370
56.113 iPad Air (3rd generation) with Wi-Fi 3 of 3 371
56.114 iPad Air (3rd generation) with Wi-Fi + Cellular 1 of 3 372
56.115 iPad Air (3rd generation) with Wi-Fi + Cellular 2 of 3 373
56.116 iPad Air (3rd generation) with Wi-Fi + Cellular 3 of 3 374

2023-10-10 | Copyright © 2023 Apple Inc. All Rights Reserved.

56.117 iPad mini (5th generation) with Wi-Fi 1 of 3 375
56.118 iPad mini (5th generation) with Wi-Fi 2 of 3 376
56.119 iPad mini (5th generation) with Wi-Fi 3 of 3 377
56.120 iPad mini (5th generation) with Wi-Fi + Cellular 1 of 3 378
56.121 iPad mini (5th generation) with Wi-Fi + Cellular 2 of 3 379
56.122 iPad mini (5th generation) with Wi-Fi + Cellular 3 of 3 380
56.123 iPad Pro 12.9-inch (3rd generation) 1 of 3 381
56.124 iPad Pro 12.9-inch (3rd generation) 2 of 3 382
56.125 iPad Pro 12.9-inch (3rd generation) 3 of 3 383
56.126 iPad Pro 11-inch (1st generation) 1 of 3 384
56.127 iPad Pro 11-inch (1st generation) 2 of 3 385
56.128 iPad Pro 11-inch (1st generation) 3 of 3 386
56.129 iPad Pro 12.9-inch (2nd generation) with Wi-Fi 387
56.130 iPad Pro 12.9-inch (2nd generation) with Wi-Fi + Cellular 388
56.131 iPad Pro 12.9-inch (2nd generation) Magnet/Hall Effect Sensors 1 of 2 389
56.132 iPad Pro 12.9-inch (2nd generation) Magnet/Hall Effect Sensors 2 of 2 390
56.133 iPad Pro 10.5-inch with Wi-Fi 391
56.134 iPad Pro 10.5-inch with Wi-Fi + Cellular 392
56.135 iPad Pro 10.5-inch Magnet/Hall Effect Sensors 1 of 2 393
56.136 iPad Pro 10.5-inch Magnet/Hall Effect Sensors 2 of 2 394
56.137 iPad (5th and 6th generation) with Wi-Fi + Cellular 395
56.138 iPad (5th and 6th generation) Magnet/Hall Effect Sensors 1 of 2 396
56.139 iPad (5th and 6th generation) Magnet/Hall Effect Sensors 2 of 2 397
56.140 iPad Pro 9.7-inch with Wi-Fi 398
56.141 iPad Pro 9.7-inch with Wi-Fi + Cellular 399
56.142 iPad Pro 9.7-inch Magnet/Hall Effect Sensors 1 of 2 400
56.143 iPad Pro 9.7-inch Magnet/Hall Effect Sensors 2 of 2 401
56.144 iPad Pro 12.9-inch (1st generation) with Wi-Fi 402
56.145 iPad Pro 12.9-inch (1st generation) with Wi-Fi + Cellular 403
56.146 iPad Pro 12.9-inch (1st generation) Magnet/Hall Effect Sensors 1 of 2 404
56.147 iPad Pro 12.9-inch (1st generation) Magnet/Hall Effect Sensors 2 of 2 405
56.148 iPad mini 4 with Wi-Fi 406
56.149 iPad mini 4 with Wi-Fi + Cellular 407
56.150 iPad mini 4 Magnet/Hall Effect Sensors 408
56.151 iPad Air 2 with Wi-Fi 409
56.152 iPad Air 2 with Wi-Fi + Cellular 410
56.153 iPad mini 2 and iPad mini 3 with Wi-Fi 411
56.154 iPad mini 2 and iPad mini 3 with Wi-Fi + Cellular 412
56.155 iPad Air with Wi-Fi 413

2023-10-10 | Copyright © 2023 Apple Inc. All Rights Reserved.

56.156 iPad Air with Wi-Fi + Cellular 414
56.157 iPad mini with Wi-Fi 415
56.158 iPad mini with Wi-Fi + Cellular 416
56.159 iPad (4th generation) with Wi-Fi 417
56.160 iPad (4th generation) with Wi-Fi + Cellular 418
56.161 iPod touch (6th generation) and iPod touch (7th generation) 419
56.162 iPod touch (5th generation) 420
56.163 Apple Watch Ultra 2, 1 of 3 421
56.164 Apple Watch Ultra 2, 2 of 3 422
56.165 Apple Watch Ultra 2, 3 of 3 423
56.166 Apple Watch Series 9, 45 mm 424
56.167 Apple Watch Series 9, 41 mm 425
56.168 Apple Watch Ultra, 1 of 3 426
56.169 Apple Watch Ultra, 2 of 3 427
56.170 Apple Watch Ultra, 3 of 3 428
56.171 Apple Watch Series 8, 45 mm 429
56.172 Apple Watch Series 8, 41 mm 430
56.173 Apple Watch SE, 44 mm 431
56.174 Apple Watch SE, 40 mm 432
56.175 Apple Watch Series 7, 45 mm 433
56.176 Apple Watch Series 7, 41 mm 434
56.177 Apple Watch Series 6, 44 mm 435
56.178 Apple Watch Series 6, 40 mm 436
56.179 Apple Watch SE (1st generation), 44 mm 437
56.180 Apple Watch SE (1st generation), 40 mm 438
56.181 Apple Watch Series 5, 44 mm 439
56.182 Apple Watch Series 5, 40 mm 440
56.183 Apple Watch Series 5 Ceramic, 44 mm 441
56.184 Apple Watch Series 5 Ceramic, 40 mm 442
56.185 Apple Watch Series 4, 44 mm 443
56.186 Apple Watch Series 4, 40 mm 444
56.187 Apple Watch Series 3 Ceramic, 42 mm 445
56.188 Apple Watch Series 3 Ceramic, 38 mm 446
56.189 Apple Watch Series 3 Metal, 42 mm 447
56.190 Apple Watch Series 3 Metal, 38 mm 448
56.191 Apple Watch Series 2 Ceramic, 42 mm 449
56.192 Apple Watch Series 2 Ceramic, 38 mm 450
56.193 Apple Watch Series 2 Metal, 42 mm 451
56.194 Apple Watch Series 2 Metal, 38 mm 452

2023-10-10 | Copyright © 2023 Apple Inc. All Rights Reserved.

56.195 Apple Watch (1st generation) and Apple Watch Series 1, 42 mm 453
56.196 Apple Watch (1st generation) and Apple Watch Series 1, 38 mm 454
56.197 MagSafe Charging Case (USB-C) for AirPods Pro (2nd generation) 1 of 3 455
56.198 MagSafe Charging Case (USB-C) for AirPods Pro (2nd generation) 2 of 3 456
56.199 MagSafe Charging Case (USB-C) for AirPods Pro (2nd generation) 3 of 3 457
56.200 MagSafe Charging Case for AirPods Pro (2nd generation) 1 of 3 458
56.201 MagSafe Charging Case for AirPods Pro (2nd generation) 2 of 3 459
56.202 MagSafe Charging Case for AirPods Pro (2nd generation) 3 of 3 460
56.203 AirPods Pro (2nd generation) 461
56.204 MagSafe Charging Case for AirPods (3rd generation) 462
56.205 AirPods (3rd generation) 463
56.206 Wireless Charging Case for AirPods Pro (1st generation) 464
56.207 AirPods Pro (1st generation) 465
56.208 Wireless Charging Case for AirPods 466
56.209 AirPods (1st generation) and AirPods (2nd generation) 467
56.210 AirTag 468
56.211 Apple TV 4K (3rd generation) 469
56.212 Siri Remote (3rd generation) 470

Revision History 471
Added Content 471
Updated Content 472

2023-10-10 | Copyright © 2023 Apple Inc. All Rights Reserved.

Overview

1. Introduction

[中文]

Note:
These Accessory Design Guidelines for Apple Devices ('Guidelines') are subject to the terms and conditions set forth on the final page of this document. By downloading, accessing, or otherwise utilizing these Guidelines, you agree to be bound by, and only utilize the Guidelines in accordance with, such terms and conditions.

These guidelines address:

- The physical design of cases, covers, screen overlays, and camera attachments for iOS and iPadOS devices.
- The specifications for hardware accessories using USB-C to interface with iOS and iPadOS devices.
- The specifications for hardware accessories using the Bluetooth transport to communicate with iOS devices, iPadOS devices, watchOS devices, tvOS devices, and Mac computers.
- The design of AC power adapters and battery packs for iOS devices, iPadOS devices, and AirPods.
- The design of Qi wireless transmitters for iOS devices and AirPods.
- The physical design of band accessories compatible with Apple Watch.

These guidelines do not address other aspects of accessory communication. Instead, see the Apple MFi Licensing Program (page 23) and the Accessory Interface Specification (page 23).

2023-10-10 | Copyright © 2023 Apple Inc. All Rights Reserved.

2. Requirements

[中文]

The use of the words *shall*, *shall not*, *required*, *prohibited*, *should*, *should not*, *recommended*, *not recommended*, *may*, *optional*, and *deprecated* in a statement have the following meanings:

- *shall*, or *required* means the statement is an absolute requirement.
- *shall not* or *prohibited* means the statement is an absolute prohibition.
- *should* or *recommended* means the full implications shall be understood before choosing a different course.
- *should not* or *not recommended* means the full implications shall be understood before choosing this course.
- *may* or *optional* means the statement is truly optional, and its presence or absence cannot be assumed.
- *deprecated* means the statement is provided for historical purposes only and is equivalent to 'shall not'.

2023-10-10 | Copyright © 2023 Apple Inc. All Rights Reserved.

3. Terminology [中文]

3.1 Device [中文]

Device refers to an iPhone, iPad, or iPod.

iOS device refers to an iPhone or iPod running iOS.

iPadOS device refers to an iPad running iPadOS.

watchOS device refers to an Apple Watch running watchOS.

tvOS device refers to an Apple TV running tvOS.

Where appropriate, specific Apple product and operating system references will also be used.

3.2 Accessory [中文]

Accessory refers to any product connecting to a *device* using the interfaces described in this specification.

3.3 Component [中文]

A *component* is a functional unit or a constituent part of an accessory. Components inter-connect and function as a part of a greater system. Examples include:

- Integrated circuits, micro-processors, flash memory, microphones, and speakers.
- Data transport interface, such as a Lightning connector, USB connector, or Bluetooth radio.
- Power sources, such as a battery or power supply.
- Human Interface Device (HID) Control Surface (page 22), such as a play/pause button.

A *component* may also refer to a group or collection, such as the keyboard portion of a keyboard/trackpad accessory.

2023-10-10 | Copyright © 2023 Apple Inc. All Rights Reserved.

3.4 Control Surface [中文]

A *control surface* is a human interface device (HID) component enabling user interaction with an accessory. Examples include:

- Connectors
- Buttons
- Switches
- Rotary knobs
- Joysticks
- Touchscreens or touch-sensitive surfaces
- Microphones
- Motion/presence sensors

References to specific types of control surfaces such as buttons or switches are only applicable to those control surface types. If a requirement calls for a physical button to be implemented, a physical button shall be present.

3.5 Direct User Action [中文]

A *direct user action* is defined as user interaction with an accessory using a Control Surface (page 22). Examples include:

- Physical gestures, such as:
  - Attaching an accessory to a device.
  - Pressing a button.
  - Actuating a switch.
  - Turning a knob.
  - Interacting with a touchscreen.
  - Waving a hand.
  - Moving in/out of range (for wireless accessories).
- Voice input.

Accessories shall not autonomously perform user inputs unless explicitly authorized by the user.

3.6 Built-In Cable [中文]

A *built-in cable* is a cable with one end permanently attached to the accessory enclosure.

2023-10-10 | Copyright © 2023 Apple Inc. All Rights Reserved.

3.7 Accessory Interface Specification [中文]

The *Accessory Interface Specification* is available to members of the Apple MFi Licensing Program (page 23).

Use of some features requires accessory developers to be a member of the program and to integrate specific MFi hardware into the accessory.

3.8 Apple MFi Licensing Program [中文]

The Apple MFi licensing program provides access to specifications, components, connectors, and other resources to create accessories capable of communicating with devices.

See https://mfi.apple.com for more information.

2023-10-10 | Copyright © 2023 Apple Inc. All Rights Reserved.

Accessories

4. All Accessories

[中文]

Requirements in this section apply to all accessories regardless of their supported features.

4.1 Scratches and Damage

[中文]

Accessories shall not scratch or damage any device.

4.2 Compliance Testing

[中文]

Accessories shall not assume evidence of functionality when attached to a device means the accessory is specification compliant. Such an approach does not account for future devices or software releases, and runs a high risk of dependence on un-documented device behavior which is subject to change at any time.

If available, accessories should validate their design and implementation using the recommended test procedures for all supported features.

4.3 Integrated USB Receptacles

[中文]

Accessories incorporating a USB receptacle for the purpose of drawing power from an external USB power source shall meet the following requirements:

- USB-B receptacles shall comply with the *USB Battery Charging Specification, Release 1.2*.
- USB-C receptacles shall comply with the requirements in Drawing Power (page 244).

4.4 User Supplied Cables and AC Power Adapters

[中文]

Accessories intended for use with user-supplied cables and/or AC power adapters shall be designed to work with any cables, AC Power Adapters (page 74), or Battery Packs (page 77) compliant with this specification, including Apple branded cables and AC power adapters. Such accessories shall not declare compatibility with only Apple branded USB cables or AC power adapters.

2023-10-10 | Copyright © 2023 Apple Inc. All Rights Reserved.

This compatibility requirement applies to all aspects of user-supplied cables and power adapters. For example:

- Connector receptacles on accessories shall accommodate all specification-compliant connector overmolds, and any accessory opening surrounding the device receptacle shall provide sufficient clearance for specification-compliant connector overmolds.
- Accessories shall work with all specification-compliant cables in regards to electrical DCR and SI.

Such accessories shall be tested with a wide variety of specification-compliant cables (including various lengths of the same cable if applicable) and AC power adapters during accessory development, in addition to Apple branded cables and AC power adapters.

4.5 TDMA Noise [中文]

GSM phones emit radiated and conducted RF noise, which can produce time division multiple access (TDMA) sounds from audio outputs. Accessories shall minimize coupling of audible interference from the device (commonly known as *TDMA noise* or *chopper noise*) into an accessory's electronics.

4.6 Attachments [中文]

Accessories shall remain compliant with the specification when connected to any attachments designed for the accessory.

Examples of accessory attachments include, but are not limited to:

- Car or desk mounts for a case.
- Wireless charging mats for a dongle or case.
- Detachable barcode scanners/credit card readers for a dock.

4.7 Magnetic Interference [中文]

Unless otherwise specified, Apple recommends avoiding the use of magnets and metal components in accessories.

Accessories claiming compatibility with a device with a digital compass (magnetometer) shall minimize interference with the digital compass and shall not repeatedly trigger compass recalibration.

Accessories claiming compatibility with a device with autofocus (AF) and/or optical image stabilization (OIS) shall not affect the operation of those features.

The following devices feature optical image stabilization:

2023-10-10 | Copyright © 2023 Apple Inc. All Rights Reserved.

- iPhone 15 Pro Max
- iPhone 15 Pro
- iPhone 15 Plus
- iPhone 15
- iPhone 14 Pro Max
- iPhone 14 Pro
- iPhone 14 Plus
- iPhone 14
- iPhone SE (3rd generation)
- iPhone 13 Pro Max
- iPhone 13 Pro
- iPhone 13
- iPhone 13 mini
- iPhone 12 Pro Max
- iPhone 12 Pro
- iPhone 12
- iPhone 12 mini
- iPhone SE (2nd generation)
- iPhone 11 Pro Max
- iPhone 11 Pro
- iPhone 11
- iPhone XS Max
- iPhone XS
- iPhone XR
- iPhone X
- iPhone 8 Plus
- iPhone 8
- iPhone 7 Plus
- iPhone 7
- iPhone 6s Plus
- iPhone 6 Plus
- iPad Pro 12.9-inch (2nd generation)
- iPad Pro 10.5-inch

4.8 Radio Frequency (RF) Performance [中文]

This section contains RF performance requirements and recommendations for accessories.

2023-10-10 | Copyright © 2023 Apple Inc. All Rights Reserved.

4.8.1 Materials and Coatings [中文]

Accessories should avoid use of:

- Metals
- Conductive materials or coatings
- Materials with high dielectric (permittivity >5 F/m)

Such materials absorb radio frequency energy and may impair or degrade the performance of antennas for cellular communication, GPS, Wi-Fi, Bluetooth, and NFC.

Examples include, but are not limited to:

- Steel, aluminum, magnesium, titanium, etc.
- Plastics with any carbon content, glass content, or metallic plating
- Metallic paints
- Black paints with high carbon loading
- White paints with high titanium dioxide loading
- Metallic Physical Vapor Deposition (PVD) coatings

4.8.2 Antenna Keep-Out [中文]

Antenna keep-out regions can be found in Device Dimensional Drawings (page 253).

Accessory Materials and Coatings (page 28) which absorb radio frequency energy located in the antenna keep-out region have a higher risk of degrading device's wireless performance.

4.8.3 Over The Air (OTA) Transmission/Reception [中文]

Accessories shall not excessively degrade device's RF transmission efficiency. This can be quantified by measuring Total Radiated Power (TRP) across all of the device's operating bands.

Accessories shall not excessively degrade device's RF reception sensitivity. This can be quantified by measuring Effective Isotropic Sensitivity (EIS) across all of the device's operating bands.

Accessories may have a higher risk of excessively degrading device's RF performance if they:

- Contain magnets.
- Intrude on device Antenna Keep-Out (page 28) zones.
- Contain active electronic circuitry, such as:
  - Bluetooth radios.
  - Switched-mode power supplies.
  - High speed data interfaces.

All accessory configurations shall be taken into account when designing for maximum RF compatibility. Examples include, but are not limited to:

- Accessory on/off.

2023-10-10 | Copyright © 2023 Apple Inc. All Rights Reserved.

- Accessory open/closed.
- Attachments (page 26) present/not present.

Good design practices shall be followed to minimize emissions and maximize RF compatibility. These include, but are not limited to:

- Shielding digital circuitry and clock signals.
- Minimizing radiation from digital interfaces.
- Decoupling high frequency signals and power supplies.
- Filtering off-board signals.
- Maintaining ground plane circuit board integrity.
- Minimizing current loop areas.
- Ensuring proper cable shielding terminations.

4.8.4 Specific Absorption Rate (SAR) [中文]

A list of labs performing SAR testing with devices is available through the Apple MFi Licensing Program (page 23).

4.8.5 Near Field Communication (NFC) [中文]

Accessories shall not degrade device's NFC transaction performance.

Accessories may have a higher risk of degrading device's NFC transaction performance if they intrude on device Antenna Keep-Out (page 28) zones.

The following devices are NFC enabled:

- iPhone 15 Pro Max
- iPhone 15 Pro
- iPhone 15 Plus
- iPhone 15
- iPhone 14 Pro Max
- iPhone 14 Pro
- iPhone 14 Plus
- iPhone 14
- iPhone SE (3rd generation)
- iPhone 13 Pro Max
- iPhone 13 Pro
- iPhone 13
- iPhone 13 mini
- iPhone 12 Pro Max
- iPhone 12 Pro
- iPhone 12

2023-10-10 | Copyright © 2023 Apple Inc. All Rights Reserved.

- iPhone 12 mini
- iPhone SE (2nd generation)
- iPhone 11 Pro Max
- iPhone 11 Pro
- iPhone 11
- iPhone XS Max
- iPhone XS
- iPhone XR
- iPhone X
- iPhone 8 Plus
- iPhone 8
- iPhone 7 Plus
- iPhone 7
- iPhone SE
- iPhone 6s Plus
- iPhone 6s
- iPhone 6 Plus
- iPhone 6

4.9 Thermal Management [中文]

The accessory's supported temperature range shall be greater than or equal to the published temperature ranges of every device it claims compatibility with.

4.10 Tripod Connections [中文]

Tripod connections shall comply with ISO 1222:2010. See https://www.iso.org/standard/55918.html.

2023-10-10 | Copyright © 2023 Apple Inc. All Rights Reserved.

5. Cases

[中文]

Cases are accessories substantially enclosing devices.

Accessories substantially enclosing devices shall comply with the requirements stated in this chapter unless the accessory supports other features in this specification whose requirements conflict with the requirements in this chapter.

If the case has multiple user-detachable components substantially enclosing the device, the requirements shall be applied to each component separately.

5.1 Product Design

[中文]

A well-designed case will securely house a device without interfering with the device's operation. Significant factors in mechanical design include access to the device's sensors, controls, and connectors. Dimensional drawings for devices can be found in Device Dimensional Drawings (page 253).

5.1.1 Device Protection

[中文]

Cases shall protect the device from a 1 m drop onto a hard paved surface in any orientation.

Exposed glass on the device shall not come within 0.85 mm of a flat surface, such as a table or floor, in any orientation when the case is attached. Ideally the glass should not come within 1.00 mm. Device protection should be achieved by creating features around the exposed glass to keep it away from the flat surface.

Care should be given to the design of the bottom of the case to achieve both device protection and provide access to device speakers, microphones, and connectors. For example, the bottom of iPhone X cases should:

- Not have an opening wider than 50 mm, see dimension 'A' in Figure 5-1 (page 32).
- Be made of polycarbonate (PC) at least 1.15 mm thick, see dimension 'B' in Figure 5-1 (page 32).

2023-10-10 | Copyright © 2023 Apple Inc. All Rights Reserved.

Figure 5-1 Device Protection

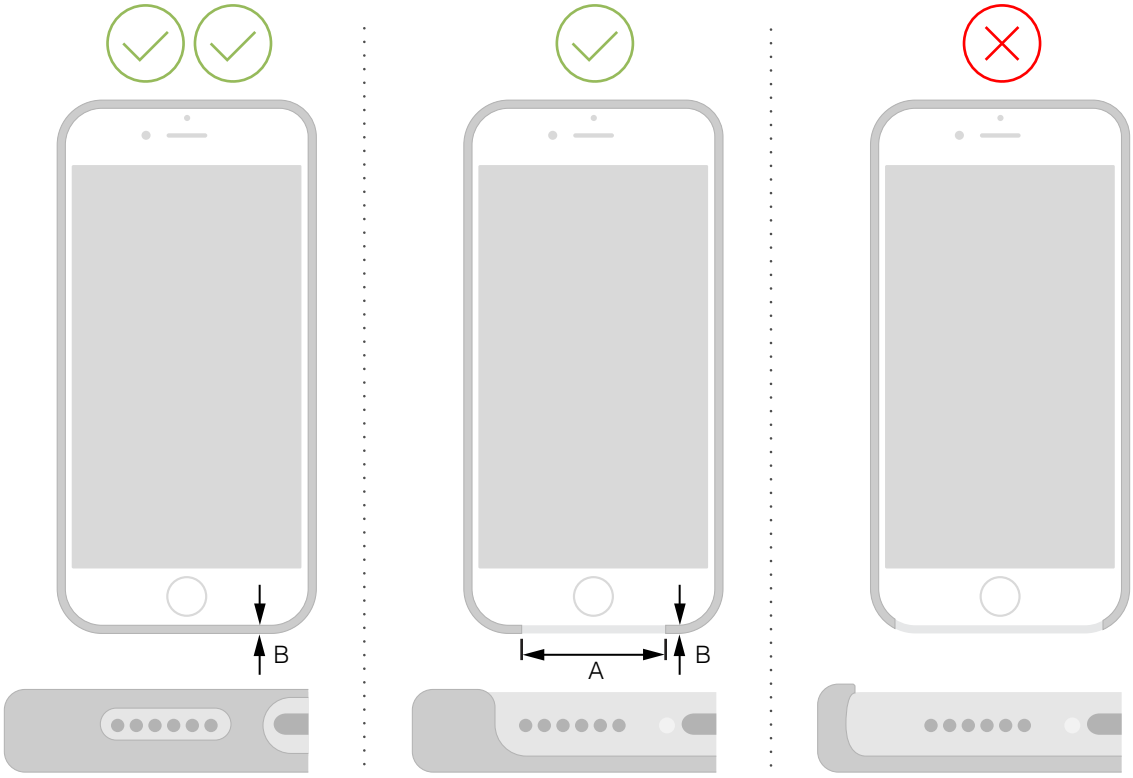

5.1.2 Access to Inputs and Interconnects [中文]

Cases shall readily permit user access to inputs and interconnects.

5.1.2.1 Access to Controls [中文]

Cases shall readily permit user access and operation of the device's mechanical controls, such as:

- Volume buttons.
- Ring/Silent switch.
- Action button.
- Side button.
- Home/Touch ID sensor.
- Home button.
- Sleep/Wake button.

5.1.2.2 Access to the USB-C Connector [中文]

If the case is for a device with a USB-C receptacle, the opening (that is, keep-out area):

- Shall be at least 12.35 mm by 6.50 mm.

2023-10-10 | Copyright © 2023 Apple Inc. All Rights Reserved.

- Should be at least 12.45 mm by 6.60 mm with full radii rounded edges for the greatest compatibility with the widest variety of cables and docks, see USB-C receptacle accessory keep-out (page 246).

USB-C connector openings shall be designed with enough margin to compensate for shifting or dimensional changes of the case material.

5.1.2.3 Access to the Lightning Connector [中文]

If the case is for a device with a Lightning receptacle, the opening (that is, keep-out area):

- Shall be at least 12.05 mm by 6.30 mm with full radii rounded edges.
- Should be at least 13.65 mm by 6.85 mm for the greatest compatibility with the widest variety of cables and docks, see Figure 5-2 (page 33).

Figure 5-2 Lightning Receptacle (C37) Keep-out

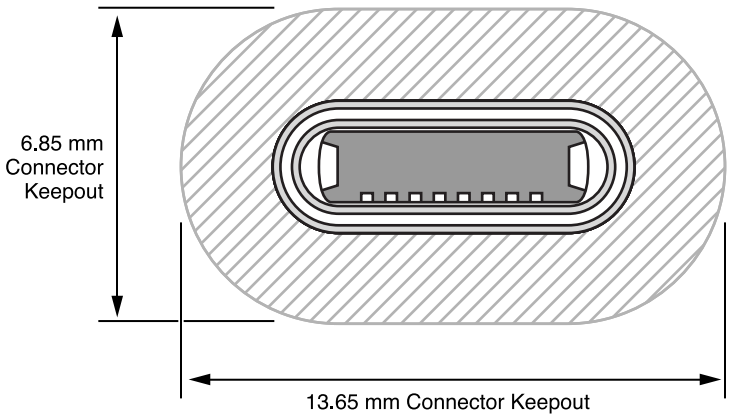

Lightning connector openings shall be designed with enough margin to compensate for shifting or dimensional changes of the case material.

5.1.2.4 Access to the Headset Jack [中文]

Cases shall provide easy access to a device's headset jack, if present.

The headset jack opening (that is, keep-out area):

- Shall be at least 6.0 mm in diameter and at most 14.0 mm deep.
- Should be at least 6.5 mm in diameter and at most 10.0 mm deep for the best compatibility with a range of headsets.

Headset jack openings shall be designed with enough margin to compensate for shifting or dimensional changes of the case material.

2023-10-10 | Copyright © 2023 Apple Inc. All Rights Reserved.

5.1.2.5 Touchscreen [中文]

Cases should not have any edges trapping water on the touchscreen when the device is held at a 30° angle relative to the horizon.

Cases shall allow a 120° opening, see Figure 5-3 (page 34), along the edges of a touchscreen's active area to ensure compatibility with touchscreen features. See Device Dimensional Drawings (page 253) for active areas.

Figure 5-3 Touchscreen keep-out angle

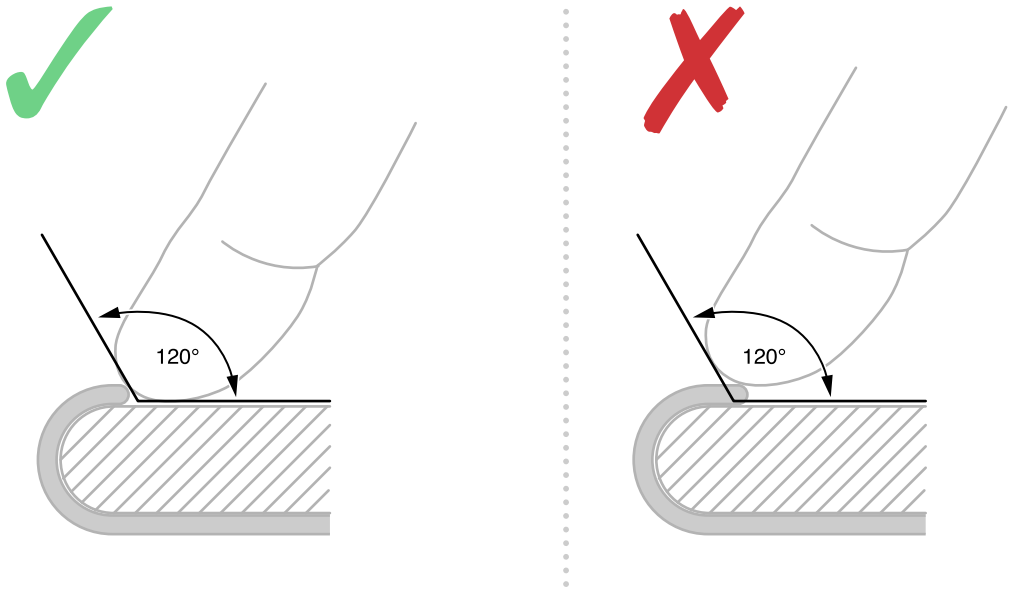

5.1.2.6 Edge Swipe Gestures [中文]

Users shall be able to easily use edge swipe gestures.

Examples of such gestures include, but are not limited to:

- Swipe in from the top edge for Control Center or Notification Center.
- Swipe in from the bottom edge for Home, App Switcher, or Reachability.
- Swipe in from the left edge in Messages or Mail to go back from a conversation.

The following devices make extensive use of edge swipe gestures in both portrait and landscape orientations:

- iPhone 15 Pro Max
- iPhone 15 Pro
- iPhone 15 Plus
- iPhone 15

2023-10-10 | Copyright © 2023 Apple Inc. All Rights Reserved.

- iPhone 14 Pro Max
- iPhone 14 Pro
- iPhone 14 Plus
- iPhone 14
- iPhone SE (3rd generation)
- iPhone 13 Pro Max
- iPhone 13 Pro
- iPhone 13
- iPhone 13 mini
- iPhone 12 Pro Max
- iPhone 12 Pro
- iPhone 12
- iPhone 12 mini
- iPhone SE (2nd generation)
- iPhone 11 Pro Max
- iPhone 11 Pro
- iPhone 11
- iPhone XS Max
- iPhone XS
- iPhone XR
- iPhone X
- iPad Pro 12.9-inch (6th generation)
- iPad Pro 11-inch (4th generation)
- iPad (10th generation)
- iPad Air (5th generation)
- iPad mini (6th generation)
- iPad Pro 12.9-inch (5th generation)
- iPad Pro 11-inch (3rd generation)
- iPad Air (4th generation)
- iPad Pro 12.9-inch (4th generation)
- iPad Pro 11-inch (2nd generation)
- iPad Pro 12.9-inch (3rd generation)
- iPad Pro 11-inch (1st generation)

5.1.2.7 Edge Press Gestures [中文]

Users shall be able to easily use edge press gestures.

The following devices support edge press gestures:

- iPhone 8 Plus
- iPhone 8

2023-10-10 | Copyright © 2023 Apple Inc. All Rights Reserved.

- iPhone 7 Plus
- iPhone 7
- iPhone 6s Plus
- iPhone 6s

An edge press gesture from the left is used to bring up the task switcher in iOS 9.0 and later.

5.1.2.8 Cover Glass Contact [中文]

Cases claiming compatibility with the following devices should not contact the cover glass as defined in their dimensional drawings:

- iPhone SE (3rd generation)
- iPhone SE (2nd generation)
- iPhone 11 Pro Max
- iPhone 11 Pro
- iPhone 11
- iPhone XS Max
- iPhone XS
- iPhone XR
- iPhone X
- iPhone 8 Plus
- iPhone 8
- iPhone 7 Plus
- iPhone 7
- iPhone 6s Plus
- iPhone 6s
- iPhone 6 Plus
- iPhone 6

See Device Dimensional Drawings (page 253).

5.1.3 Dock Compatibility [中文]

The distance from bottom of the device to the outside of a case should not exceed 1.8 mm for compatibility with docks.

5.1.4 Wireless Power and Rear Pockets [中文]

Cases claiming compatibility with MagSafe or Qi wireless power, see Device Power (Inductive) (page 138), shall not have rear pockets or holders for credit cards, RFID cards, or other similar items. Cards may be damaged and/or impact wireless charging performance.

2023-10-10 | Copyright © 2023 Apple Inc. All Rights Reserved.

5.2 Acoustics [中文]

Cases shall not impair or degrade the acoustic performance of a device.

5.2.1 Call Quality [中文]

Cases shall not impair or degrade the user experience making and receiving audio calls over a cellular network or audio/video calls using FaceTime in both handset and speakerphone modes. Cases should not change the frequency response of the speakers or microphones. In addition, the user should not hear any distortion or echo resulting from using the case.

Cases shall not obstruct any microphones during a phone call. Occluding microphones can result in call quality degradation.

5.2.2 Speaker to Microphone Coupling [中文]

Cases shall not facilitate the conduction of sound from any speaker to any microphone. Such sound conduction may cause echoing in phone calls.

5.2.3 Speaker/Microphone Openings [中文]

Device speaker/microphone port locations vary from model to model, see Device Dimensional Drawings (page 253).

5.2.3.1 Thin Cases (≤2.25 mm) [中文]

Microphone/speaker openings in thin cases should:

- Be offset at least 2.0 mm from the edge of any device speaker/microphone port.
- Be at most 1.5 mm thick along their inner diameter.
- Have a maximum 45° incoming angle to their inner diameter.
- Maintain a proper seal against the device between speaker/microphone ports.

2023-10-10 | Copyright © 2023 Apple Inc. All Rights Reserved.

Figure 5-4 Microphone/speaker opening recommendations for thin cases

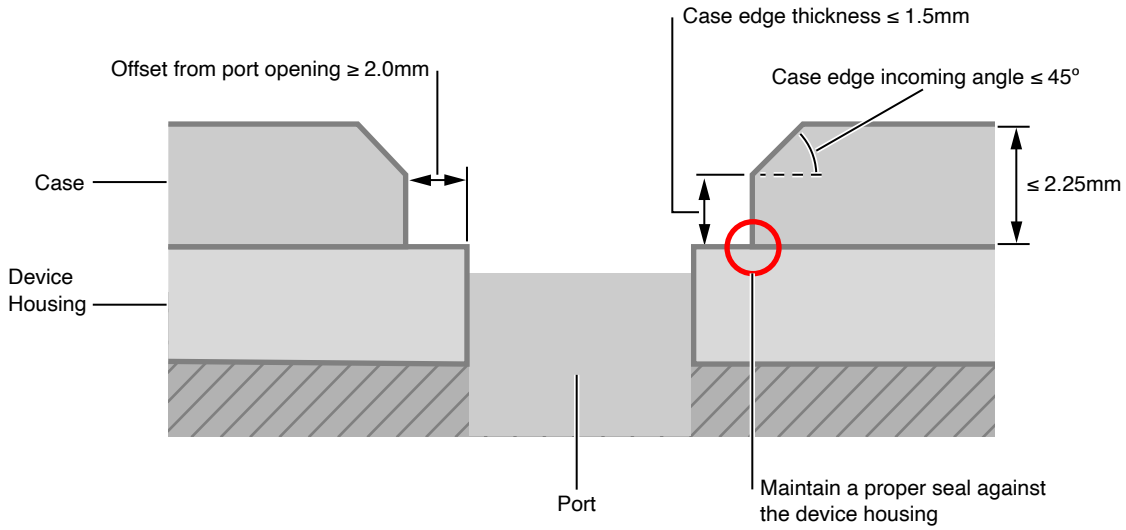

5.2.3.2 Thick Cases (>2.25 mm) [中文]

Speaker and microphone openings should be channeled independently and without interruption to/from the outside surface of a thick case.

Figure 5-5 Thick case acoustic channels

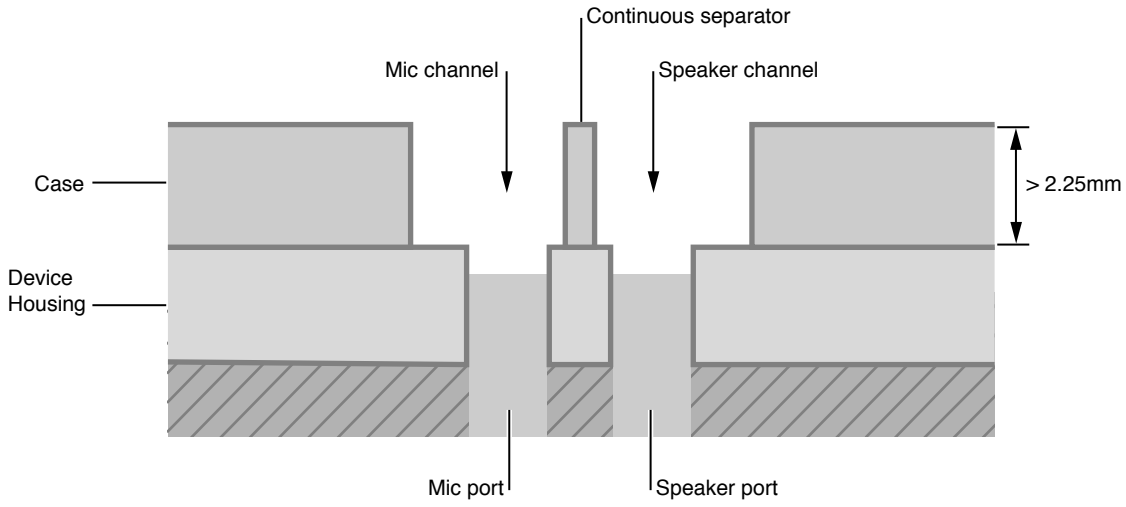

Thick cases should maximize exit separation between speaker and microphone channels.

2023-10-10 | Copyright © 2023 Apple Inc. All Rights Reserved.

Figure 5-6 Thick case microphone and speaker exit separation

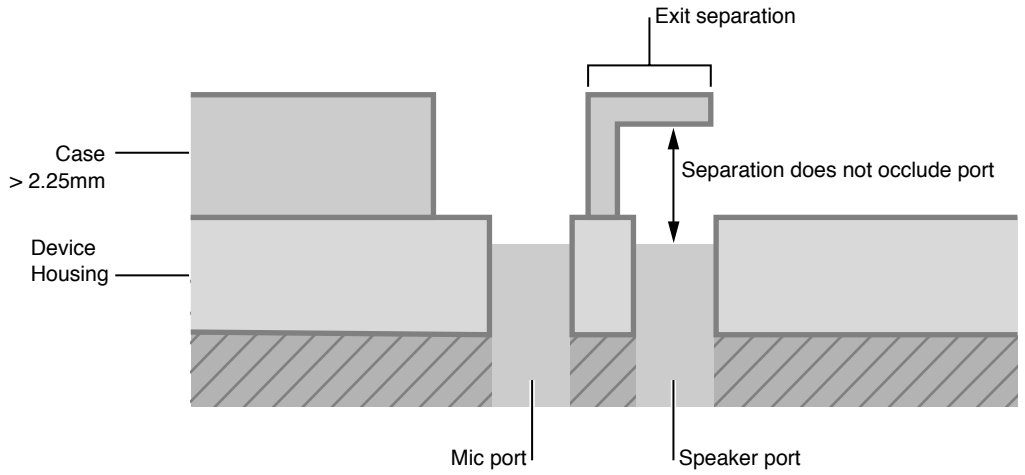

Thick case channels may act as a resonance chamber and detune microphone/speaker frequency response. The resulting frequency response may vary according to channel size/shape.

If a thick case does not maintain a proper seal against the device between microphone/speaker channels, the case itself may become an acoustic chamber.

Figure 5-7 Improper thick case seal

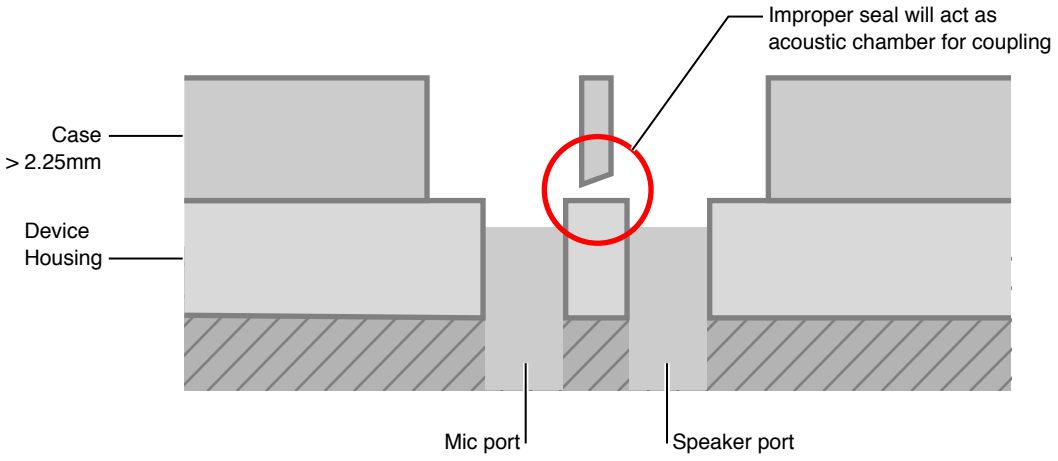

Copyright © 2023 Apple Inc. All Rights Reserved.

5.3 Ambient Light Sensor and Proximity Sensor [中文]

The ambient light sensor and proximity sensor locations for various devices are indicated in the Device Dimensional Drawings (page 253). Some of the dimensional drawings specify a keep-out area around these sensors.

5.4 Taptic Engine [中文]

Cases should not cause substantial change in the feel of the device's Taptic Engine.

The following devices contain a Taptic Engine:

- iPhone 15 Pro Max
- iPhone 15 Pro
- iPhone 15 Plus
- iPhone 15
- iPhone 14 Pro Max
- iPhone 14 Pro
- iPhone 14 Plus
- iPhone 14
- iPhone SE (3rd generation)
- iPhone 13 Pro Max
- iPhone 13 Pro
- iPhone 13
- iPhone 13 mini
- iPhone 12 Pro Max
- iPhone 12 Pro
- iPhone 12
- iPhone 12 mini
- iPhone SE (2nd generation)
- iPhone 11 Pro Max
- iPhone 11 Pro
- iPhone 11
- iPhone XS Max
- iPhone XS
- iPhone XR
- iPhone X
- iPhone 8 Plus
- iPhone 8
- iPhone 7 Plus
- iPhone 7

2023-10-10 | Copyright © 2023 Apple Inc. All Rights Reserved.

- iPhone 6s Plus
- iPhone 6s

5.5 Magnetic Interference [中文]

Cases shall not interfere with the device's:

- Magnetic compass.
- Rear camera autofocus (AF).
- Rear camera optical image stabilization (OIS), if present.
- Front camera autofocus, if present.

See Magnetic Interference (page 26) for additional details.

5.6 Touch ID [中文]

Accessories shall not inhibit use of the device's Touch ID sensor. Touch ID sensor keep-outs for devices can be found in Device Dimensional Drawings (page 253).

Cases overlaying the sensor may cause users to have difficulty using Touch ID.

5.7 Camera [中文]

The camera field of view (FOV) and the illumination provided by the flash are designed for each device camera. It is exceptionally important manufacturers consult Device Dimensional Drawings (page 253) for each device and do not assume parameters are shared between devices.

Images from the camera may be affected by the geometry, color, and surface finish of the case.

> **Note:**
> Apple recommends a semi-gloss black material or coating around the camera and flash opening.

5.7.1 Geometry [中文]

The camera lens FOV shall not be blocked. Making an opening too small around the camera and flash may block the lens FOV and the illumination from the flash. Blocking the FOV may cause vignetting in the image, where one or more corners of the image are darker than the center. Blocking marginal rays

2023-10-10 | Copyright © 2023 Apple Inc. All Rights Reserved.

just outside the lens FOV may also reduce the sharpness and contrast of the image. Blocking flash illumination may cause haze in the image, resulting in reduced contrast. See Device Dimensional Drawings (page 253) for the camera keep-out.

Case openings shall not be designed in a manner directing stray light into the camera lens. If the opening is too narrow or too steep, it may reflect light into the camera lens washing out the image or adding a color cast. Adding a chamfer to the openings near the camera may help direct stray light away from the camera lens. When the device includes a flash, a narrow or steep opening may reflect light from the camera and flash opening back into the camera lens. This may cause images to appear washed out or cause artifacts. Designers should also ensure mechanical keep-outs as outlined in the Device Dimensional Drawings (page 253) are maintained with worst-case X-Y placement tolerances to minimize the risk of haze.

5.7.2 Color [中文]

Light reflected from a case may carry the color of the case. Black material or black coatings may help avoid color bleeding into the camera lens. The darker the color the less likely light from a flash or external source may be reflected off the case and into the camera lens.

5.7.3 Surface Finish [中文]

Semi-gloss materials may help direct reflected light away from the camera lens. Matte or diffusing materials scatter light in all directions increasing the likelihood light from a flash or a strong external light source will be reflected into a camera lens.

5.7.4 Image Degradation Examples [中文]

Figure 5-8 Sample image degradation by image blocking in an ambient condition

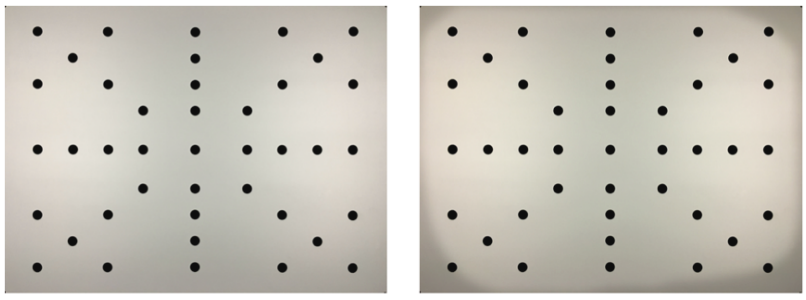

2023-10-10 | Copyright © 2023 Apple Inc. All Rights Reserved.

Figure 5-9 Sample image degradation by color shift through accessory with strong color

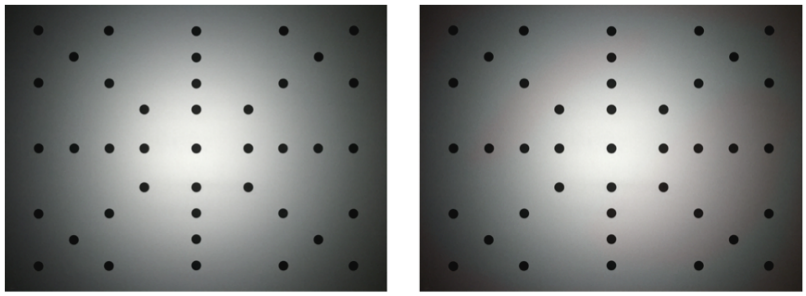

Figure 5-10 Sample image degradation by flash interference

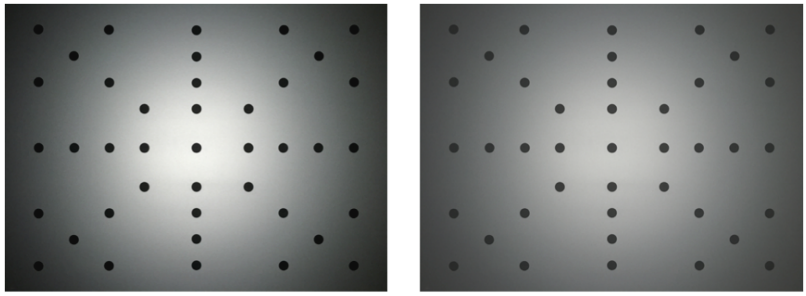

5.8 Reliability [中文]

Cases shall be tested to verify they will withstand long-term use under typical use conditions, and will not impair or functionally degrade a device, cause damage to the device or its immediate surroundings, or adversely affect the user.

5.8.1 Device Insertion and Removal [中文]

Cases shall hold the device securely while permitting easy insertion and removal. A case shall not cause Scratches and Damage (page 25) to the device by the repeated insertion and removal of the device from the case under conditions representative of long-term use in a variety of environments.

2023-10-10 | Copyright © 2023 Apple Inc. All Rights Reserved.

5.8.2 Colorfastness [中文]

Dyes, inks, or coatings in or on the case shall not bleed color onto either the device or its user, particularly while the case is in contact with common substances such as water or sunscreen lotions.

5.9 Environmental [中文]

Cases shall comply with applicable environmental regulations for the regions in which such accessories are to be sold, as well as applicable substance or material restrictions including:

- Organic tin compounds, PFOS, PFOA, phthalates, azo dyes, polybrominated biphenyls (PBBs) and PAHs, per requirements of the EU REACh regulation EC 1907/2006.
- Nickel leach rate on surfaces in prolonged skin contact, per requirements of the EU REACh regulation EC 1907/2006.
- Cadmium, lead, hexavalent chromium, and nickel, per requirements of EU Directive 2009/48/EC.
- Natural rubber latex, per requirements of EU Directive EC 93/42/EEC.
- Dimethylfumarate (DMFu), per requirements of EU Regulation 412/2012.
- pH and Formaldehyde, per requirements of China GB 18401 for textiles and China GB 20400 for leather.
- Endangered species of flora and fauna in products or packaging (US Lacey Act).
- Polybrominated diphenyl ethers (PBDE).
- Compliance with California proposition 65, as applicable.

5.10 Test Procedures [中文]

5.10.1 Device Models [中文]

Case testing procedures vary depending on the device they enclose.

5.10.1.1 iPhone 15 Pro Max [中文]

Table 5-1 iPhone 15 Pro Max Case Testing Matrix

Test	Using	Notes
Product Design (page 58)	iPhone 15 Pro Max	
MagSafe Case Magnet Array (page 164)	iPhone 15 Pro Max	Cases supporting MagSafe only.
Taptic Engine (page 60)	iPhone 15 Pro Max	
Acoustics (page 63)	iPhone 15 Pro Max	

2023-10-10 | Copyright © 2023 Apple Inc. All Rights Reserved.

5.10.1.2 iPhone 15 Pro [中文]

Table 5-2 iPhone 15 Pro Case Testing Matrix

Test	Using	Notes
Product Design (page 58)	iPhone 15 Pro	
MagSafe Case Magnet Array (page 164)	iPhone 15 Pro	Cases supporting MagSafe only.
Taptic Engine (page 60)	iPhone 15 Pro	
Acoustics (page 63)	iPhone 15 Pro	

5.10.1.3 iPhone 15 Plus [中文]

Table 5-3 iPhone 15 Plus Case Testing Matrix

Test	Using	Notes
Product Design (page 58)	iPhone 15 Plus	
MagSafe Case Magnet Array (page 164)	iPhone 15 Plus	Cases supporting MagSafe only.
Taptic Engine (page 60)	iPhone 15 Plus	
Acoustics (page 63)	iPhone 15 Plus	

5.10.1.4 iPhone 15 [中文]

Table 5-4 iPhone 15 Case Testing Matrix

Test	Using	Notes
Product Design (page 58)	iPhone 15	
MagSafe Case Magnet Array (page 164)	iPhone 15	Cases supporting MagSafe only.
Taptic Engine (page 60)	iPhone 15	
Acoustics (page 63)	iPhone 15	

5.10.1.5 iPhone 14 Pro Max [中文]

Table 5-5 iPhone 14 Pro Max Case Testing Matrix

Test	Using	Notes
Product Design (page 58)	iPhone 14 Pro Max	
MagSafe Case Magnet Array (page 164)	iPhone 14 Pro Max	Cases supporting MagSafe only.
Taptic Engine (page 60)	iPhone 14 Pro Max	
Acoustics (page 63)	iPhone 14 Pro Max	

2023-10-10 | Copyright © 2023 Apple Inc. All Rights Reserved.

5.10.1.6 iPhone 14 Pro [中文]

Table 5-6 iPhone 14 Pro Case Testing Matrix

Test	Using	Notes
Product Design (page 58)	iPhone 14 Pro	
MagSafe Case Magnet Array (page 164)	iPhone 14 Pro	Cases supporting MagSafe only.
Taptic Engine (page 60)	iPhone 14 Pro	
Acoustics (page 63)	iPhone 14 Pro	

5.10.1.7 iPhone 14 Plus [中文]

Table 5-7 iPhone 14 Plus Case Testing Matrix

Test	Using	Notes
Product Design (page 58)	iPhone 14 Plus	
MagSafe Case Magnet Array (page 164)	iPhone 14 Plus	Cases supporting MagSafe only.
Taptic Engine (page 60)	iPhone 14 Plus	
Acoustics (page 63)	iPhone 14 Plus	

5.10.1.8 iPhone 14 [中文]

Table 5-8 iPhone 14 Case Testing Matrix

Test	Using	Notes
Product Design (page 58)	iPhone 14	
MagSafe Case Magnet Array (page 164)	iPhone 14	Cases supporting MagSafe only.
Taptic Engine (page 60)	iPhone 14	
Acoustics (page 63)	iPhone 14	

5.10.1.9 iPhone 13 Pro Max [中文]

Table 5-9 iPhone 13 Pro Max Case Testing Matrix

Test	Using	Notes
Product Design (page 58)	iPhone 13 Pro Max	
MagSafe Case Magnet Array (page 164)	iPhone 13 Pro Max	Cases supporting MagSafe only.
Taptic Engine (page 60)	iPhone 13 Pro Max	
Acoustics (page 63)	iPhone 13 Pro Max	

2023-10-10 | Copyright © 2023 Apple Inc. All Rights Reserved.

5.10.1.10 iPhone 13 Pro [中文]

Table 5-10 iPhone 13 Pro Case Testing Matrix

Test	Using	Notes
Product Design (page 58)	iPhone 13 Pro	
MagSafe Case Magnet Array (page 164)	iPhone 13 Pro	Cases supporting MagSafe only.
Taptic Engine (page 60)	iPhone 13 Pro	
Acoustics (page 63)	iPhone 13 Pro	

5.10.1.11 iPhone 13 [中文]

Table 5-11 iPhone 13 Case Testing Matrix

Test	Using	Notes
Product Design (page 58)	iPhone 13	
MagSafe Case Magnet Array (page 164)	iPhone 13	Cases supporting MagSafe only.
Taptic Engine (page 60)	iPhone 13	
Acoustics (page 63)	iPhone 13	

5.10.1.12 iPhone 13 mini [中文]

Table 5-12 iPhone 13 mini Case Testing Matrix

Test	Using	Notes
Product Design (page 58)	iPhone 13 mini	
MagSafe Case Magnet Array (page 164)	iPhone 13 mini	Cases supporting MagSafe only.
Taptic Engine (page 60)	iPhone 13 mini	
Acoustics (page 63)	iPhone 13 mini	

5.10.1.13 iPhone 12 Pro Max [中文]

Table 5-13 iPhone 12 Pro Max Case Testing Matrix

Test	Using	Notes
Product Design (page 58)	iPhone 12 Pro Max	

2023-10-10 | Copyright © 2023 Apple Inc. All Rights Reserved.

Test	Using	Notes
MagSafe Case Magnet Array (page 164)	iPhone 12 Pro Max	Cases supporting MagSafe only.
Taptic Engine (page 60)	iPhone 12 Pro Max	
Acoustics (page 63)	iPhone 12 Pro Max	

5.10.1.14 iPhone 12 Pro [中文]

Table 5-14 iPhone 12 Pro Case Testing Matrix

Test	Using	Notes
Product Design (page 58)	iPhone 12 Pro	
MagSafe Case Magnet Array (page 164)	iPhone 12 Pro	Cases supporting MagSafe only.
Taptic Engine (page 60)	iPhone 12 Pro	
Acoustics (page 63)	iPhone 12 Pro	

5.10.1.15 iPhone 12 [中文]

Table 5-15 iPhone 12 Case Testing Matrix

Test	Using	Notes
Product Design (page 58)	iPhone 12	
MagSafe Case Magnet Array (page 164)	iPhone 12	Cases supporting MagSafe only.
Taptic Engine (page 60)	iPhone 12	
Acoustics (page 63)	iPhone 12	

5.10.1.16 iPhone 12 mini [中文]

Table 5-16 iPhone 12 mini Case Testing Matrix

Test	Using	Notes
Product Design (page 58)	iPhone 12 mini	
MagSafe Case Magnet Array (page 164)	iPhone 12 mini	Cases supporting MagSafe only.
Taptic Engine (page 60)	iPhone 12 mini	
Acoustics (page 63)	iPhone 12 mini	

2023-10-10 | Copyright © 2023 Apple Inc. All Rights Reserved.

5.10.1.17 iPhone 11 Pro Max [中文]

Table 5-17 iPhone 11 Pro Max Case Testing Matrix

Test	Using	Notes
Product Design (page 58)	iPhone 11 Pro Max	
Taptic Engine (page 60)	iPhone 11 Pro Max	
Acoustics (page 63)	iPhone 11 Pro Max	

5.10.1.18 iPhone 11 Pro [中文]

Table 5-18 iPhone 11 Pro Case Testing Matrix

Test	Using	Notes
Product Design (page 58)	iPhone 11 Pro	
Taptic Engine (page 60)	iPhone 11 Pro	
Acoustics (page 63)	iPhone 11 Pro	

5.10.1.19 iPhone 11 [中文]

Table 5-19 iPhone 11 Case Testing Matrix

Test	Using	Notes
Product Design (page 58)	iPhone 11	
Taptic Engine (page 60)	iPhone 11	
Acoustics (page 63)	iPhone 11	

5.10.1.20 iPhone XS Max [中文]

Table 5-20 iPhone XS Max Case Testing Matrix

Test	Using	Notes
Product Design (page 58)	iPhone XS Max	
Taptic Engine (page 60)	iPhone XS Max	
Acoustics (page 63)	iPhone XS Max	

2023-10-10 | Copyright © 2023 Apple Inc. All Rights Reserved.

5.10.1.21 iPhone XS [中文]

Table 5-21 iPhone XS Case Testing Matrix

Test	Using	Notes
Product Design (page 58)	iPhone XS	
Taptic Engine (page 60)	iPhone XS	
Acoustics (page 63)	iPhone XS	

5.10.1.22 iPhone XR [中文]

Table 5-22 iPhone XR Case Testing Matrix

Test	Using	Notes
Product Design (page 58)	iPhone XR	
Taptic Engine (page 60)	iPhone XR	
Acoustics (page 63)	iPhone XR	

5.10.1.23 iPhone X [中文]

Table 5-23 iPhone X Case Testing Matrix

Test	Using	Notes
Product Design (page 58)	iPhone X	
Taptic Engine (page 60)	iPhone X	
Acoustics (page 63)	iPhone X	

5.10.1.24 iPhone 8 Plus/iPhone 7 Plus [中文]

Table 5-24 iPhone 8 Plus/iPhone 7 Plus Case Testing Matrix

Test	Using	Notes
Product Design (page 58)	iPhone 8 Plus and iPhone 7 Plus	
Taptic Engine (page 60)	iPhone 8 Plus and iPhone 7 Plus	
Touch ID Sensor Overlays (page 60)	iPhone 8 Plus and iPhone 7 Plus	
Acoustics (page 63)	iPhone 8 Plus and iPhone 7 Plus	

2023-10-10 | Copyright © 2023 Apple Inc. All Rights Reserved.

It is not possible for a case to claim compatibility with only iPhone 8 Plus or only iPhone 7 Plus.

5.10.1.25 iPhone SE (3rd generation)/iPhone SE (2nd generation)/iPhone 8/iPhone 7 [中文]

Table 5-25 iPhone SE (3rd generation)/iPhone SE (2nd generation)/iPhone 8/iPhone 7 Case Testing Matrix

Test	Using	Notes
Product Design (page 58)	iPhone SE (3rd generation), iPhone SE (2nd generation), iPhone 8, and iPhone 7	
Taptic Engine (page 60)	iPhone SE (3rd generation), iPhone SE (2nd generation), iPhone 8, and iPhone 7	
Touch ID Sensor Overlays (page 60)	iPhone SE (3rd generation), iPhone SE (2nd generation), iPhone 8, and iPhone 7	
Acoustics (page 63)	iPhone SE (3rd generation), iPhone SE (2nd generation), iPhone 8, and iPhone 7	

It is not possible for a case to claim compatibility with only iPhone SE (3rd generation), only iPhone SE (2nd generation), only iPhone 8, or only iPhone 7.

5.10.1.26 iPhone 6s Plus/iPhone 6 Plus [中文]

Table 5-26 iPhone 6s Plus/iPhone 6 Plus Case Testing Matrix

Test	Using	Notes
Product Design (page 58)	iPhone 6s Plus and iPhone 6 Plus	
Taptic Engine (page 60)	iPhone 6s Plus	

It is not possible for a case to claim compatibility with only iPhone 6s Plus or only iPhone 6 Plus.

5.10.1.27 iPhone 6s/iPhone 6 [中文]

Table 5-27 iPhone 6s/iPhone 6 Case Testing Matrix

Test	Using	Notes
Product Design (page 58)	iPhone 6s and iPhone 6	
Taptic Engine (page 60)	iPhone 6s	

2023-10-10 | Copyright © 2023 Apple Inc. All Rights Reserved.

It is not possible for a case to claim compatibility with only iPhone 6s or only iPhone 6.

5.10.1.28 iPhone 5/iPhone 5s/iPhone SE [中文]

Table 5-28 iPhone 5/iPhone 5s/iPhone SE Case Testing Matrix

Test	Using	Notes
Product Design (page 58)	iPhone SE	

It is not possible for a case to claim compatibility with only iPhone 5 or only iPhone 5s or only iPhone SE.

5.10.1.29 iPhone 5c [中文]

Table 5-29 iPhone 5c Case Testing Matrix

Test	Using	Notes
Product Design (page 58)	iPhone 5c	

5.10.1.30 iPad Pro 12.9-inch (6th generation) and iPad Pro 12.9-inch (5th generation) [中文]

Table 5-30 iPad Pro 12.9-inch (6th generation) and iPad Pro 12.9-inch (5th generation) Case Testing Matrix

Test	Using	Notes
Product Design (page 58)	iPad Pro 12.9-inch (6th generation)	

It is not possible for a case to claim compatibility with only iPad Pro 12.9-inch (6th generation) or only iPad Pro 12.9-inch (5th generation).

2023-10-10 | Copyright © 2023 Apple Inc. All Rights Reserved.

5.10.1.31 iPad Pro 11-inch (4th generation) and iPad Pro 11-inch (3rd generation) [中文]

Table 5-31 iPad Pro 11-inch (4th generation) and iPad Pro 11-inch (3rd generation) Case Testing Matrix

Test	Using	Notes
Product Design (page 58)	iPad Pro 11-inch (4th generation)	

It is not possible for a case to claim compatibility with only iPad Pro 11-inch (4th generation) or only iPad Pro 11-inch (3rd generation).

5.10.1.32 iPad (10th generation) [中文]

Table 5-32 iPad (10th generation) Case Testing Matrix

Test	Using	Notes
Product Design (page 58)	iPad (10th generation)	

5.10.1.33 iPad mini (6th generation) [中文]

Table 5-33 iPad mini (6th generation) Case Testing Matrix

Test	Using	Notes
Product Design (page 58)	iPad mini (6th generation)	

5.10.1.34 iPad (7th generation)/iPad (8th generation)/iPad (9th generation) [中文]

Table 5-34 iPad (7th generation)/iPad (8th generation)/iPad (9th generation) Case Testing Matrix

Test	Using	Notes
Product Design (page 58)	iPad (7th generation), iPad (8th generation), and iPad (9th generation)	

It is not possible for a case to claim compatibility with only iPad (7th generation) or only iPad (8th generation) or only iPad (9th generation).

2023-10-10 | Copyright © 2023 Apple Inc. All Rights Reserved.

5.10.1.35 iPad Air (5th generation)/iPad Air (4th generation) [中文]

Table 5-35 iPad Air (5th generation)/iPad Air (4th generation) Case Testing Matrix

Test	Using	Notes
Product Design (page 58)	iPad Air (5th generation)	

5.10.1.36 iPad Pro 12.9-inch (4th generation) [中文]

Table 5-36 iPad Pro 12.9-inch (4th generation) Case Testing Matrix

Test	Using	Notes
Product Design (page 58)	iPad Pro 12.9-inch (4th generation)	

5.10.1.37 iPad Pro 11-inch (2nd generation) [中文]

Table 5-37 iPad Pro 11-inch (2nd generation) Case Testing Matrix

Test	Using	Notes
Product Design (page 58)	iPad Pro 11-inch (2nd generation)	

5.10.1.38 iPad Air (3rd generation) [中文]

Table 5-38 iPad Air (3rd generation) Case Testing Matrix

Test	Using	Notes
Product Design (page 58)	iPad Air (3rd generation)	

5.10.1.39 iPad mini (5th generation) [中文]

Table 5-39 iPad mini (5th generation) Case Testing Matrix

Test	Using	Notes
Product Design (page 58)	iPad mini (5th generation)	

2023-10-10 | Copyright © 2023 Apple Inc. All Rights Reserved.

5.10.1.40 iPad Pro 12.9-inch (3rd generation) [中文]

Table 5-40 iPad Pro 12.9-inch (3rd generation) Case Testing Matrix

Test	Using	Notes
Product Design (page 58)	iPad Pro 12.9-inch (3rd generation)	

5.10.1.41 iPad Pro 11-inch (1st generation) [中文]

Table 5-41 iPad Pro 11-inch (1st generation) Case Testing Matrix

Test	Using	Notes
Product Design (page 58)	iPad Pro 11-inch (1st generation)	

5.10.1.42 iPad Pro 10.5-inch [中文]

Table 5-42 iPad Pro 10.5-inch Case Testing Matrix

Test	Using	Notes
Product Design (page 58)	iPad Pro 10.5-inch	

5.10.1.43 iPad Pro 12.9-inch (2nd generation) [中文]

Table 5-43 iPad Pro 12.9-inch (2nd generation) Case Testing Matrix

Test	Using	Notes
Product Design (page 58)	iPad Pro 12.9-inch (2nd generation)	

5.10.1.44 iPad (5th and 6th generation) [中文]

Table 5-44 iPad (5th and 6th generation) Case Testing Matrix

Test	Using	Notes
Product Design (page 58)	iPad (5th generation) or iPad (6th generation)	

2023-10-10 | Copyright © 2023 Apple Inc. All Rights Reserved.

5.10.1.45 iPad Pro 9.7-inch [中文]

Table 5-45 iPad Pro 9.7-inch Case Testing Matrix

Test	Using	Notes
Product Design (page 58)	iPad Pro 9.7-inch	

5.10.1.46 iPad Pro 12.9-inch (1st generation) [中文]

Table 5-46 iPad Pro 12.9-inch (1st generation) Case Testing Matrix

Test	Using	Notes
Product Design (page 58)	iPad Pro 12.9-inch (1st generation)	

5.10.1.47 iPad mini 4 [中文]

Table 5-47 iPad mini 4 Case Testing Matrix

Test	Using	Notes
Product Design (page 58)	iPad mini 4	

5.10.1.48 iPad mini/iPad mini 2/iPad mini 3 [中文]

Table 5-48 iPad mini/iPad mini 2/iPad mini 3 Case Testing Matrix

Test	Using	Notes
Product Design (page 58)	iPad mini 3	

It is not possible for a case to claim compatibility with only iPad mini or only iPad mini 2 or only iPad mini 3.

2023-10-10 | Copyright © 2023 Apple Inc. All Rights Reserved.

5.10.1.49 iPad Air 2 [中文]

Table 5-49 iPad Air 2 Case Testing Matrix

Test	Using	Notes
Product Design (page 58)	iPad Air 2	

5.10.1.50 iPad Air [中文]

Table 5-50 iPad Air Case Testing Matrix

Test	Using	Notes
Product Design (page 58)	iPad Air	

5.10.1.51 iPad (4th generation) [中文]

Table 5-51 iPad (4th generation) Case Testing Matrix

Test	Using	Notes
Product Design (page 58)	iPad (4th generation)	

5.10.1.52 iPod touch (5th generation)/iPod touch (6th generation)/iPod touch (7th generation) [中文]

Table 5-52 iPod touch (5th generation)/iPod touch (6th generation)/iPod touch (7th generation) Case Testing Matrix

Test	Using	Notes
Product Design (page 58)	iPod touch (7th generation)	

It is not possible for a case to claim compatibility with only iPod touch (5th generation), iPod touch (6th generation) or iPod touch (7th generation).

2023-10-10 | Copyright © 2023 Apple Inc. All Rights Reserved.

5.10.2 Product Design [中文]

5.10.2.1 Equipment [中文]

- Device
- Apple Lightning Digital AV Adapter for devices with a Lightning receptacle.
- Apple USB-C Digital AV Multiport Adapter for devices with a USB-C receptacle.
- EarPods with 3.5 mm Headphone Plug for devices with a 3.5 mm headset jack.
- Vernier calipers
- 0.85 mm plastic feeler gauge

5.10.2.2 Procedure [中文]

1. Insert the device into the case.
2. Verify the device completely fits inside the case.
3. Verify the device is not loose.
4. Verify all buttons are accessible.
5. Inspect for button feel. Verify all buttons are not too hard to press or take a lot of effort to press.
6. Verify speaker/microphone ports are not occluded.
7. If the device has an Apple Lightning receptacle:
   a. Insert the Apple Lightning Digital AV Adapter into the receptacle and verify it fits.
   b. Using vernier calipers, measure the Lightning connector opening on the case. Verify the opening is measured to be at least 12.05 mm by 6.30 mm.
8. If the device has a USB-C receptacle:
   a. Insert the Apple USB-C Digital AV Multiport Adapter into the receptacle and verify it fits.
   b. Using vernier calipers, measure the USB-C connector opening on the case. Verify the opening is measured to be at least 12.35 mm by 6.50 mm.
9. If the device has a 3.5 mm headset jack:
   a. Insert EarPods with 3.5 mm Headphone Plug into the headset jack and verify it fits.
   b. Using vernier calipers, measure the headset jack opening on the case. Verify the opening is measured to be at least 6 mm in diameter and no more than 14 mm deep.
10. If the device has a Touch ID sensor integrated with the Home button, use vernier calipers to verify the case is at least 2 mm away from the Touch ID sensor.
11. If the device has a Touch ID sensor integrated with the Sleep/Wake button, use vernier calipers to verify the case meets the keep-out defined for each device the accessory claims compatibility with. See Device Dimensional Drawings (page 253).

2023-10-10 | Copyright © 2023 Apple Inc. All Rights Reserved.

12. Verify the case is always proud of the feeler gauge when the gauge is placed at each corner of the device. See Figure 5-11 (page 59).

Figure 5-11 Device proudness test

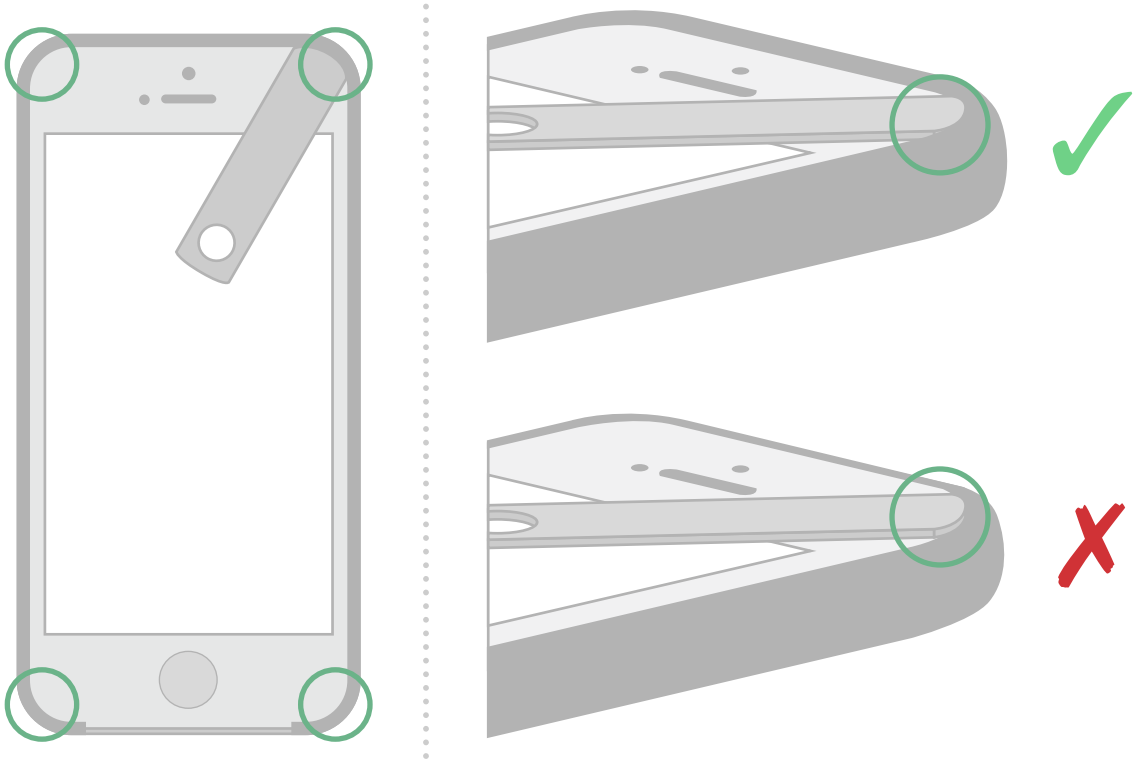

13. Set the device flat on its face (screen facing down).
14. Roll the device towards any side not enclosed by the case until the gap between the device's exposed glass and flat surface is smallest.
15. Verify the feeler gauge fits into the gap between the device's exposed glass and flat surface.

Figure 5-12 Device gap test

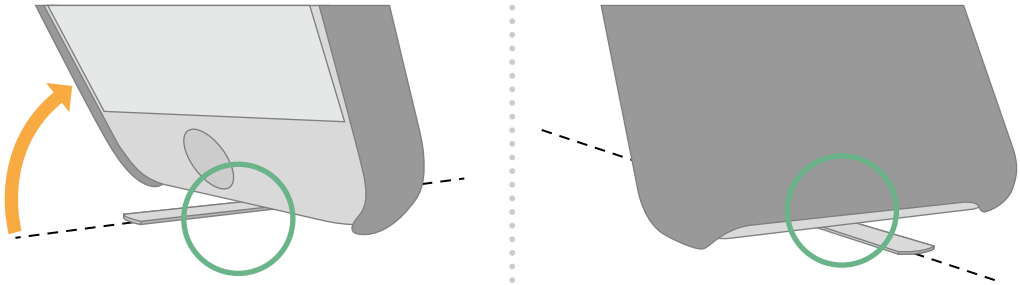

16. If the case has an overlay, verify there are no air gaps introduced between it and the touchscreen.

2023-10-10 | Copyright © 2023 Apple Inc. All Rights Reserved.

5.10.3 Taptic Engine [中文]

5.10.3.1 Equipment [中文]

- Two devices A and B, same model
- Table

5.10.3.2 Procedure [中文]

1. Attach the case to device B.
2. Place device A on top of the table.
3. Place device B on top of the table next to device A.
4. Compare the Taptic Engine feedback between device A and device B for each of the following tasks:
   a. Go to Settings > Sound & Haptics, set "Play Haptics in Ring Mode" and "Play Haptics in Silent Mode" to the on position.
   b. Toggle the Ring/Silent switch or use the Action button.
   c. Connect a charger, wait a few seconds, then disconnect the charger.
   d. Go to Settings > Notifications > Phone > Sounds, select Reflection (Default).
   e. Go to Settings > Notifications > Messages > Sounds, select Note (Default).
   f. Go to the Home screen.
   g. Long press the Settings app to show the Quick Actions menu, then slide your finger across the menu and release when Wi-Fi is selected.
   h. Go to the Home screen.
   i. Long press the Home app to show the Quick Actions menu. Release, then tap away from the menu to return to the Home screen.
   j. Go to the Clock app and select Timers (lower right corner).
   k. Scroll through the hours and minutes.
5. If the device has a Home button:
   a. Go to Settings > General > Home Button, select option 2.
   b. Press the Home button.
6. Repeat the above tasks while holding device A in the left hand and device B in the right hand.

5.10.3.3 Pass/Fail Criteria [中文]

The case does not cause substantial change in the feel of the device's Taptic Engine.

5.10.4 Touch ID Sensor Overlays [中文]

This test procedure applies to accessories overlaying the Touch ID sensor.

2023-10-10 | Copyright © 2023 Apple Inc. All Rights Reserved.

5.10.4.1 Equipment [中文]

- Nitrile gloves (for example, Ansell TNT Blue)
- Ethyl alcohol hand sanitizer (for example, Purell)
- Scissors

5.10.4.2 Procedure [中文]

1. Cut off a square of material from the nitrile glove's wrist portion.
2. Install the accessory onto the device.
3. Press the sleep/wake or side button to place the device into a sleep state (display off).
4. Place the square of nitrile glove material over the Touch ID sensor with the glove's outer side facing away from the device.
5. Apply a small amount of hand sanitizer (approximately 2 cm in diameter) to the glove over the Touch ID sensor.
6. Repeat the following steps 10 times:
   a. Press the Touch ID sensor with a thumb.
   b. Verify the device wakes (display on).
   c. Place the device into a sleep state (display off).
7. Repeat the following steps 10 times:
   a. Press the Touch ID sensor with an index finger.
   b. Verify the device wakes (display on).
   c. Place the device into a sleep state (display off).

5.10.4.3 Pass/Fail Criteria [中文]

Verify the device wakes every time the Touch ID sensor is pressed.

5.10.5 Camera [中文]

5.10.5.1 Autofocus & Optical Image Stabilization [中文]

This test applies to devices equipped with Autofocus (AF) and/or Optical Image Stabilization (OIS).

5.10.5.1.1 Equipment [中文]

- Device running iOS 17.0 or later or iPadOS 17.0 or later. See Device Models (page 44).
- A flat level non-ferrous test surface away from magnetic fields.
- Accessory Developer Assistant (ADA) (page 250).
- Autofocus & Optical Image Stabilization Test Profile (page 250).

2023-10-10 | Copyright © 2023 Apple Inc. All Rights Reserved.

5.10.5.1.2 Procedure [中文]

1. Launch the Accessory Developer Assistant app and sign in.
2. Select Case, Autofocus and Optical Image Stabilization.
3. Allow ADA to access the device camera, if prompted.
4. Set the device on the test surface.
5. Follow the on-screen instructions.
6. Select Measure Baseline and wait for the measurement to complete.
7. Attach the case being tested on the device.
8. Set the device back on the test surface.
9. Select Measure Attached and wait for the measurement to complete.
10. Verify all tests pass and note the results.

5.10.6 Compass [中文]

5.10.6.1 Equipment [中文]

The following equipment is necessary:

- Device running iPadOS 17.0 or later.
- Accessory Developer Assistant (ADA) (page 250).
- A flat level non-ferrous test surface away from magnetic fields.
- Magnetometer, such as the Meda FVM400.

5.10.6.2 Test Setup [中文]

1. Place a mark on the test surface with a 90° angle to use for repeated device alignment. For example, use two pieces of tape perpendicular to each other.
2. Use the magnetometer to verify the test surface has a consistent magnetic field, not affected by nearby electronics or magnets.

5.10.6.3 Procedure [中文]

Compass Test Procedures are outlined in this section.

1. Launch the Accessory Developer Assistant app and sign in.
2. Select Compass and the case type, such as: Folio, Keyboard Folio, or Shell.

2023-10-10 | Copyright © 2023 Apple Inc. All Rights Reserved.

3. Scroll down and select all supported case configurations, see Figure 5-13 (page 63).

Figure 5-13 Case configurations

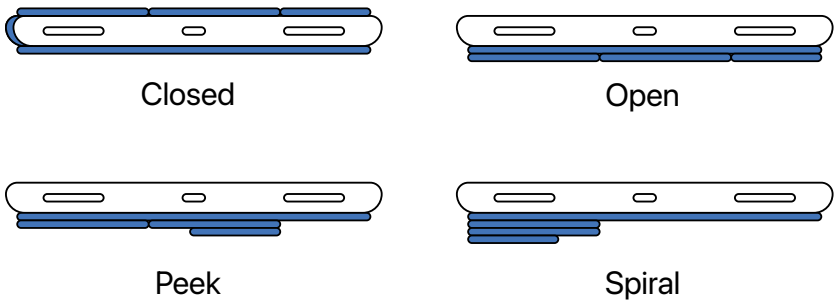

4. Scroll down and select all included case materials.
5. Select Start Test.
6. If a closed case configuration is selected, connect an external display and mouse when prompted.
7. Place the device with no case attached on the test surface, aligned to the mark.
8. Select Measure Baseline to collect an initial measurement.
9. Once the measurement is complete, follow the on-screen instructions to attach the case and collect a measurement for each supported case configuration.
10. Verify all tests pass and note the results.

5.10.7 Acoustics [中文]

The following test procedures apply to devices with a built in speaker and/or microphone.

5.10.7.1 Speakerphone Call [中文]

This procedure evaluates the impact of a case on the speakerphone performance of a device.

5.10.7.1.1 Equipment and Test Setup [中文]

This procedure needs two operators in separate quiet rooms.

Room A:

- Operator A
- The device (with cellular service) used to evaluate the case.
  - The device should have at least two out of five bars of cellular reception within the room.

Room B:

- Operator B
- Landline speakerphone

2023-10-10 | Copyright © 2023 Apple Inc. All Rights Reserved.

- Digital audio recorder (for example, a device with the Voice Memo app)

5.10.7.1.2 Pass/Fail Criteria [中文]

There are two categories of failure for this procedure:

- Echo: If Operator B hears their own voice from the landline.
- Double Talk: If Operator B hears Operator A inconsistently.

The pass/fail threshold for these two categories should be established by performing the test procedure using:

- The device (without the case) as a reference.

There should be no perceivable difference between the reference and the test conducted with the case on the device.

5.10.7.1.3 Procedure [中文]

1. Operator A: Use the device (without a case) in Room A to call the landline phone in Room B.
2. Operator A: Place the device in speakerphone mode.
3. Operator B: Answer the call with the landline phone in Room B.
4. Operator B: Place the landline phone in speakerphone mode.
5. Operator A and B: Simultaneously recite the following phrases to evaluate the call quality:
   a. The birch canoe slid on the smooth planks.
   b. Glue the sheet to the dark blue background.
   c. It's easy to tell the depth of a well.
   d. These days a chicken leg is a rare dish.
   e. Rice is often served in round bowls.
   f. The juice of lemons makes fine punch.
   g. The box was thrown beside the parked truck.
   h. The hogs were fed chopped corn and garbage.
   i. Four hours of steady work faced us.
   j. Large size in stockings is hard to sell.
6. Operator B: Evaluate the call. Ensure the call is audible and clear when there is no case on the device.
7. Operator A: Place the case on the device.
8. Operator B: Start audio recording using a digital audio recorder.
9. Operator A: State the test date and identify the manufacturer name, product name, and a unique identifier (UID) for case (production run name, design version, etc.).
10. Operator A and B: Simultaneously recite the same phrases as above.
11. Operator B: Stop audio recording.
12. Operator B: Evaluate the recording against the Pass/Fail Criteria (page 64).

2023-10-10 | Copyright © 2023 Apple Inc. All Rights Reserved.

The phrases used for this test procedure are from "IEEE Recommended Practice for Speech Quality Measurements," in *IEEE Transactions on Audio and Electroacoustics*, vol. 17, no. 3, pp. 225-246, September 1969.

2023-10-10 | Copyright © 2023 Apple Inc. All Rights Reserved.

6. Covers

[中文]

This chapter is applicable to accessories covering device displays.

6.1 Magnetic Interference

[中文]

Accessory covers shall not interfere with the device's:

- Magnetic compass.
- Rear camera autofocus (AF).
- Rear camera optical image stabilization (OIS), if present.
- Front camera autofocus, if present.

See Magnetic Interference (page 26) for additional details.

6.2 Smart Covers

[中文]

Dimensional drawings indicating magnet and Hall effect sensor locations are available for the following devices:

- iPad Pro 12.9-inch (6th generation) 3 of 5 (page 320)
- iPad Pro 11-inch (4th generation) 3 of 5 (page 325)
- iPad (10th generation) 4 of 6 (page 331)
- iPad Air (5th generation) and iPad Air (4th generation) 3 of 5 (page 336)
- iPad mini (6th generation) 3 of 6 (page 341)
- iPad mini (6th generation) 4 of 6 (page 342)
- iPad (9th generation), iPad (8th generation) and iPad (7th generation) 2 of 4 (page 346)
- iPad Pro 12.9-inch (5th generation) 3 of 5 (page 351)
- iPad Pro 11-inch (3rd generation) 3 of 5 (page 356)
- iPad Pro 12.9-inch (4th generation) 3 of 5 (page 361)
- iPad Pro 11-inch (2nd generation) 3 of 5 (page 366)
- iPad Air (3rd generation) with Wi-Fi 2 of 3 (page 370)
- iPad Air (3rd generation) with Wi-Fi + Cellular 2 of 3 (page 373)
- iPad mini (5th generation) with Wi-Fi 2 of 3 (page 376)
- iPad mini (5th generation) with Wi-Fi + Cellular 2 of 3 (page 379)
- iPad Pro 12.9-inch (3rd generation) 2 of 3 (page 382)

2023-10-10 | Copyright © 2023 Apple Inc. All Rights Reserved.

- iPad Pro 11-inch (1st generation) 2 of 3 (page 385)
- iPad Pro 12.9-inch (2nd generation) Magnet/Hall Effect Sensors 1 of 2 (page 389)
- iPad Pro 12.9-inch (2nd generation) Magnet/Hall Effect Sensors 2 of 2 (page 390)
- iPad Pro 10.5-inch Magnet/Hall Effect Sensors 1 of 2 (page 393)
- iPad Pro 10.5-inch Magnet/Hall Effect Sensors 2 of 2 (page 394)
- iPad (5th and 6th generation) Magnet/Hall Effect Sensors 1 of 2 (page 396)
- iPad (5th and 6th generation) Magnet/Hall Effect Sensors 2 of 2 (page 397)
- iPad Pro 9.7-inch Magnet/Hall Effect Sensors 1 of 2 (page 400)
- iPad Pro 9.7-inch Magnet/Hall Effect Sensors 2 of 2 (page 401)
- iPad Pro 12.9-inch (1st generation) Magnet/Hall Effect Sensors 1 of 2 (page 404)
- iPad Pro 12.9-inch (1st generation) Magnet/Hall Effect Sensors 2 of 2 (page 405)
- iPad mini 4 Magnet/Hall Effect Sensors (page 408)

2023-10-10 | Copyright © 2023 Apple Inc. All Rights Reserved.

7. Screen Overlays

[中文]

The displays on Apple products have been carefully engineered and tested to deliver exacting visual performance. Many products also feature Multi-Touch technology to support user interactions. Any material overlaying the screen or between the surface and users' fingers (or writing instruments on iPad) may impact the visual, touch, or sensor performance.

7.1 Product Design

[中文]

A screen overlay shall not:

- Degrade the performance of Multi-Touch, Apple Pencil, or sensors.
- Introduce air gaps between the touchscreen and overlay.
- Be electrically conductive.
- Cause any color tinge to cool white light sources.

A screen overlay should have a relative permittivity (dielectric) of 3.1 to 3.2.

A screen overlay should not:

- Exceed 0.3 mm in thickness.
- Exceed 0.095 mm in thickness to support Apple Pencil.
- Have a water contact angle <110°.

> **Note:**
> Non-glossy surfaces may accelerate Apple Pencil tip wear.

7.1.1 Optical Transmission

[中文]

Optical transmission of screen overlays should:

- Be greater than 90% relative to clear glass for any viewing angle across the active display area, see Device Dimensional Drawings (page 253).
- Remain flat as defined in Figure 7-1 (page 69). Upon normalizing the transmission spectrum to the value at 550 nm, the normalized spectrum should fall in the range of [0.99, 1.01] from 500-800 nm and [0.95, 1.01] from 400-500 nm.

2023-10-10 | Copyright © 2023 Apple Inc. All Rights Reserved.

Figure 7-1 Transmission Spectrum

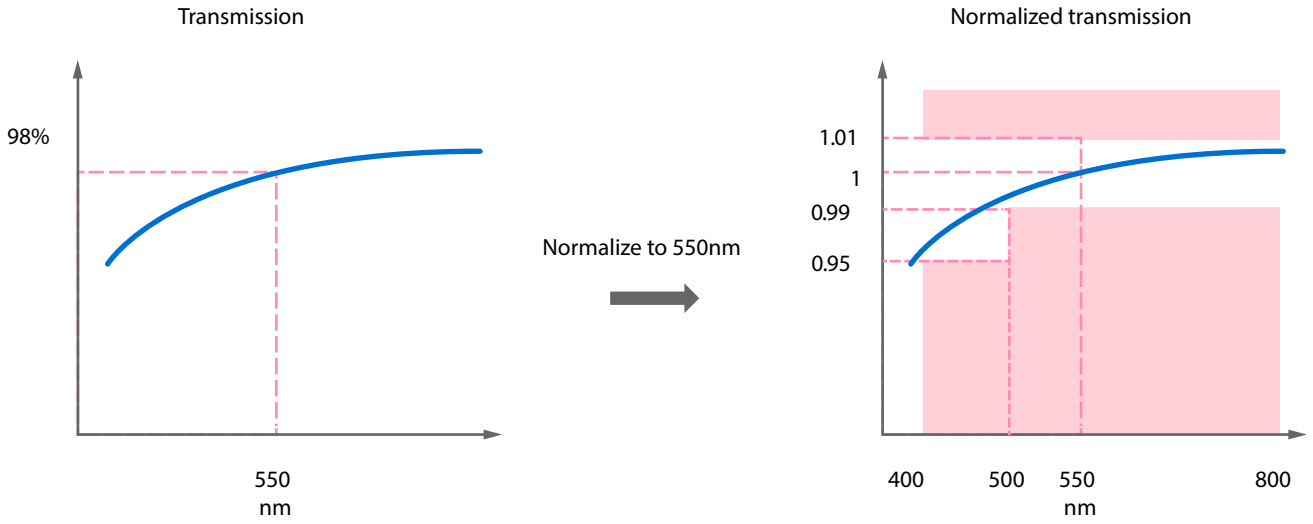

7.1.2 Infrared Transmission [中文]

Infrared transmission variance shall not exceed 1.5%. The infrared transmission in the 1200 nm - 1500 nm range relative to light source should be greater than:

- 90% for an angle of incidence between 0° and 45°.
- 84% for an angle of incidence between 45° and 60°.

7.1.3 Transmission Haze [中文]

Transmission haze is the percentage of visible and infrared light scattered at more than 2.5° from the normal transmission. Transmission haze should:

- Not exceed 0.3% for the following devices:
  - iPhone 15 Pro Max
  - iPhone 15 Pro
  - iPhone 15 Plus
  - iPhone 15
  - iPhone 14 Pro Max
  - iPhone 14 Pro
- Not exceed 13% for all other devices.
- Be measured with a haze meter, per ASTM D1003.

7.1.4 Dynamic Island [中文]

Screen overlays shall not have a punch-out for the Dynamic Island.

2023-10-10 | Copyright © 2023 Apple Inc. All Rights Reserved.

7.2 Edge Swipe and Edge Press Gestures [中文]

See Edge Swipe Gestures (page 34) and Edge Press Gestures (page 35).

2023-10-10 | Copyright © 2023 Apple Inc. All Rights Reserved.

8. Camera Attachments

[中文]

This chapter is applicable to accessories intentionally altering images captured by device cameras.

8.1 Magnetic Interference

[中文]

Accessory camera attachments shall not interfere with the device's:

- Magnetic compass.
- Rear camera autofocus (AF).
- Rear camera optical image stabilization (OIS), if present.
- Front camera autofocus, if present.

See Magnetic Interference (page 26) for additional details.

2023-10-10 | Copyright © 2023 Apple Inc. All Rights Reserved.

9. Adapters

[中文]

An adapter accessory is a dongle or a Built-In Cable (page 22) enabling connections between physically incompatible devices and accessories.

Unless otherwise specified, accessories may integrate one or more adapter components as well as other accessory features to create more advanced multi-port adapters. For example, a Lightning or USB-C adapter may support audio, power, external storage, media controls, app communication, and more.

See the Accessory Interface Specification (page 23) for more information.

9.1 Headset Adapters (Lightning to 3.5 mm)

[中文]

Lightning to 3.5 mm headset adapters are accessories enabling 3.5 mm audio connections.

See the Accessory Interface Specification (page 23) for more information.

9.2 USB-A/USB-C to Lightning Headset Adapters

[中文]

USB-A to Lightning or USB-C to Lightning headset adapters are accessories integrating a Lightning Receptacle (C37) to support Lightning headsets, speakers, and microphones.

See the Accessory Interface Specification (page 23) for more information.

9.3 Ethernet Adapters (Lightning to RJ45)

[中文]

A Lightning to Ethernet adapter is an accessory enabling a device to access a wired network. The Apple USB Ethernet Adapter is an example of a similar accessory for a Mac.

See the Accessory Interface Specification (page 23) for more information.

2023-10-10 | Copyright © 2023 Apple Inc. All Rights Reserved.

9.4 Lightning to USB Micro-B Adapters [中文]

Figure9-1 Lightning to USB Micro-B Adapter

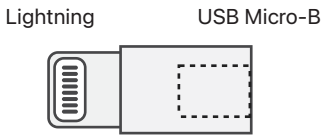

Lightning to USB Micro-B adapters are Lightning dongle accessories functioning exactly like the Apple Lightning to USB Micro-B Adapter and shall consist of:

- Lightning connector.
- USB Micro-B receptacle.

See the Accessory Interface Specification (page 23) for more information.

2023-10-10 | Copyright © 2023 Apple Inc. All Rights Reserved.

10. AC Power Adapters

[中文]

AC power adapters convert AC "mains" power to DC for the purpose of providing power to a device. They may provide power using one or more of the following:

- USB-C Receptacle (page 244) combined with a USB-C cable or USB-C to Lightning cable.
- USB-A Receptacle (page 239) combined with a USB-A to Lightning cable.
- Device Power (Inductive) (page 138).

10.1 Converter Switching Frequencies

[中文]

Device touchscreen or audio functionality may be degraded if converter switching frequencies do not meet the following requirements:

- Under loads greater than 5 mA, converter switching frequencies shall be above 22 kHz.
- Under loads greater than 20 mA, converter switching frequencies:
  - Shall be above 60 kHz.
  - Should be above 450 kHz.

10.2 YCAP AC Capacitor

[中文]

AC power adapters should include a YCAP AC capacitor (up to 1000 pF) between the primary and secondary sections of the adapter's transformer to reduce common-mode noise at switching frequencies. These frequencies or their harmonics can interfere with device touchscreen sensors.

10.3 Impedance Stability

[中文]

AC power adapter series impedance should not change abruptly. Sudden changes in impedance may cause touchscreen sensor output oscillations.

Bridge diodes used in full-wave bridge rectifiers can be a major source of abrupt changes in the series impedance. If the bridge diodes have large inherent reverse capacitance (greater than 100 pF), then the net impedance change due to diode switching may be acceptably small. However, diode reverse capacitance may decrease in more compact IC designs due to decreased chip area.

2023-10-10 | Copyright © 2023 Apple Inc. All Rights Reserved.

Impedance of bridge diodes with unacceptably low reverse capacitance can be stabilized using the example circuit shown in Figure 10-1 (page 75) and Table 10-1 (page 75). In this example, capacitors C1, C2, C3, and C4 have been placed in parallel with diodes D1, D2, D3, and D4 to stabilize the bridge impedance. Their values are larger than the inherent reverse capacitances of the diodes.

Resistors R1, R2, R3, and R4 are optional; if included, they can block noise at very high frequencies, which can help with EMI compatibility. The recommended values of R1, R2, R3, and R4 in Table 10-1 (page 75) were chosen to have trivial levels of impedance relative to the impedances of C1, C2, C3, and C4 at power line frequencies.

Figure 10-1 Typical AC power adapter diode bridge circuit

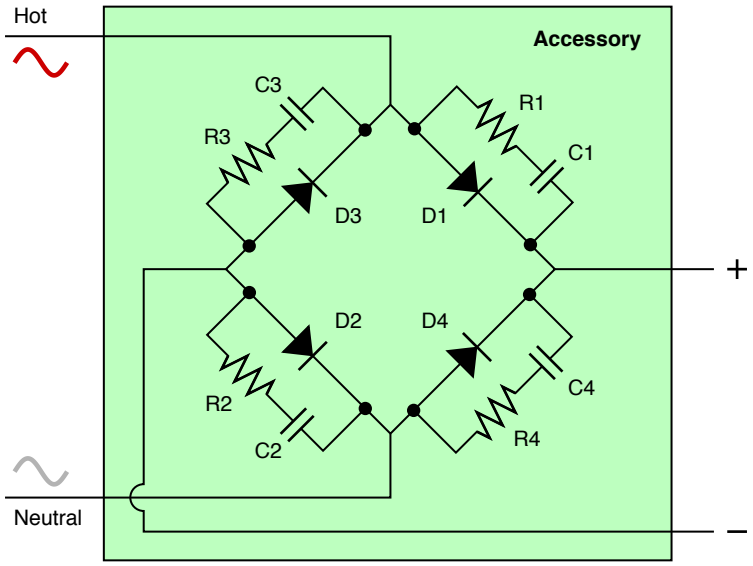

Table 10-1 Typical component values for an AC power adapter diode bridge circuit

Component	Value
C1, C2, C3, C4	47 pF
R1, R2, R3, R4	2 kΩ

10.4 Fuse Protection [中文]

A fuse should be present at the input of the AC power adapter to protect it under any fault condition.

2023-10-10 | Copyright © 2023 Apple Inc. All Rights Reserved.

10.5 Short Circuit Response [中文]

The output of the AC power adapter should drop or fold back without any resulting damage if its output is shorted to the secondary common (less than 10 mΩ).

2023-10-10 | Copyright © 2023 Apple Inc. All Rights Reserved.

11. Battery Packs

[中文]

A battery pack is an accessory designed to provide power to the device.

The battery pack may provide power using one or more of the following:

- Inductive power transmitter, see Device Power (Inductive) (page 138).
- Integrated Lightning connector, see Device Power (Lightning) (page 133).
- USB-C Receptacle (page 244) combined with a USB-C cable or USB-C to Lightning cable.
- USB-A Receptacle (page 239) combined with a USB-A to Lightning cable.

2023-10-10 | Copyright © 2023 Apple Inc. All Rights Reserved.

12. Headsets

[中文]

Headsets provide users with personal audio experiences. Devices treat headsets differently from accessories with speakers.

Headsets shall comply with:

- TDMA Noise (page 26) requirements.
- Applicable volume limit regulations in the regions in which they are sold.

12.1 Product Design

[中文]

Headsets shall have:

- Drivers positioned on, over, or in user's ears.
- Microphone(s) positioned to primarily record user's voice.

12.2 Audio Interface

[中文]

Headsets shall establish audio connections to devices using one of the following interfaces:

- Apple USB-C Analog Headset Module (page 227).
- USB-C Plug (page 240) using a USB Audio Device Class 2.0 or 3.0 compliant codec.
- Bluetooth (page 207):
  - Hands-Free Profile (HFP) (page 211)
  - Advanced Audio Distribution Profile (A2DP) (page 216)

12.3 Remote Controls

[中文]

Controls shall be implemented using one of the following:

- Direct electrical connections to the Apple Headset Remote and Microphone Transmitter (page 232) when integrating an Apple USB-C Analog Headset Module (page 227).
- HID Headset Remote (page 143) when using one of the following:
  - USB-C Plug (page 240) with a USB Audio Device Class 2.0 or 3.0 compliant codec.
  - Bluetooth (page 207).
- Bluetooth Audio/Video Remote Control Profile (AVRCP) (page 214).

2023-10-10 | Copyright © 2023 Apple Inc. All Rights Reserved.

Bluetooth headsets should implement controls identical to an Apple wired headset.

12.4 USB-C Headset Identification [中文]

This section applies to headsets that integrate a USB-C connector.

Headsets shall:

- Set the idVendor, idProduct, iManufacturer, iProduct, and iSerialNumber in the Standard Device Descriptor to reflect the accessory markings and packaging.
- Set the Output Terminal Type to `0x0302` (Headphones) if the headset does not integrate a microphone.
- Set the Output Terminal Type and Input Terminal Type to `0x0402` (Headset) if the headset integrates a microphone.
- Set the Audio Function Category to `0x04` (Headset).

Headsets should:

- Set the iInterface Playback and iInterface Record strings to reflect the accessory markings and packaging.
- Set a unique iSerialNumber in the Standard Device Descriptor.

> **Note:**
> C125 has its Output Terminal Type and Input Terminal Type set to `0x0402` (Headset) and Audio Function Category set to `0x04` (Headset). These configurations cannot be overwritten.

2023-10-10 | Copyright © 2023 Apple Inc. All Rights Reserved.

13. Strobes

[中文]

Strobe accessories replace a device's integrated flash when capturing a still image from either the front or rear-facing cameras. Photographers can use such accessories to control scene lighting for creative purposes.

Strobes are:

- Compatible with all iOS camera applications.
- Synchronized with iPhone camera using the Lightning connector.

Figure 13-1 Example of integrated flash (top) vs. accessory strobe (bottom)

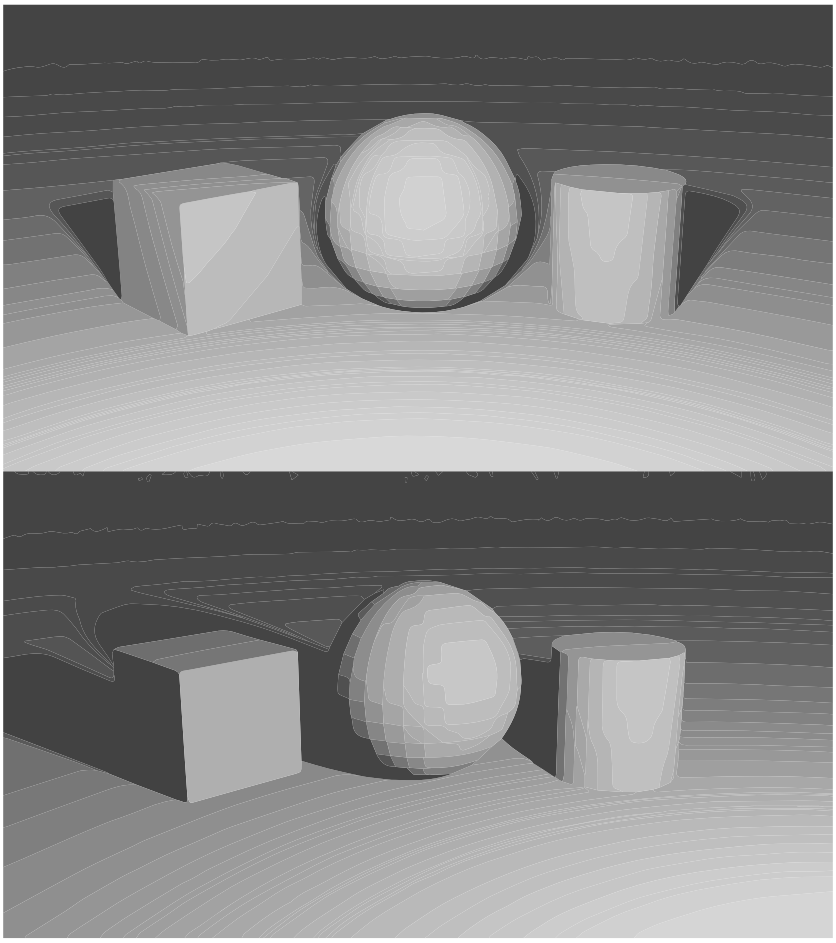

2023-10-10 | Copyright © 2023 Apple Inc. All Rights Reserved.

The following devices support strobe accessories:

- iPhone 14 Pro Max
- iPhone 14 Pro
- iPhone 14 Plus
- iPhone 14
- iPhone SE (3rd generation)
- iPhone 13 Pro Max
- iPhone 13 Pro
- iPhone 13
- iPhone 13 mini
- iPhone 12 Pro Max
- iPhone 12 Pro
- iPhone 12
- iPhone 12 mini
- iPhone SE (2nd generation)
- iPhone 11 Pro Max
- iPhone 11 Pro
- iPhone 11

This feature is supported on iOS 14.0 or later.

See the Accessory Interface Specification (page 23) for more information.

2023-10-10 | Copyright © 2023 Apple Inc. All Rights Reserved.

14. Keyboards

[中文]

Devices may accept user input from accessory keyboards in place of the onscreen keyboard.

14.1 Requirements

[中文]

Accessory keyboards shall:

- Support the Human Interface Device (HID) (page 203) protocol.
- Not identify themselves as Apple-branded accessories, for example, using the Apple Vendor ID and/or Product IDs.

Keyboard keys exhibiting any of the following behaviors are explicitly prohibited:

- Send anything other than 'key pressed' or 'key released' for key(s) physically pressed/released.
- Emulate combinations or sequences of keys (for example, a Copy button sending ⌘-C or macros generating a timed sequence of events).
- Emulate timed user actions, such as 'press-and-hold'.
- Send different HID usages depending on the state of another control surface.

All HID usages sent from the keyboard shall occur in response to a Direct User Action (page 22).

Keyboards may integrate LEDs to indicate the:

- Caps Lock status of the device.
- Connection status, such as Bluetooth state.
- Battery status of the accessory, if applicable.

Keyboards shall not incorporate any other status LEDs not supported by devices.

Keyboards should be integrated with Trackpads (page 88) when possible to provide an enhanced user experience.

Mechanical key layout shall be based on the ISO/IEC 9995-2, ANSI-INCITS 154-1988, or JIS X 6002-1980 standards. Keyboard HID descriptors shall set the Keyboard Physical Layout usage to the appropriate layout code as defined in Table 14-5 (page 86).

Keyboard HID descriptors shall set the bCountryCode field to the appropriate country code as defined in *Device Class Definition for Human Interface Devices (HID) Version 1.11, section 6.2.1 HID Descriptor*.

2023-10-10 | Copyright © 2023 Apple Inc. All Rights Reserved.

Keyboard HID descriptors shall declare support for the HID Keyboard/Keypad Page. HID report descriptors may declare a input usage minimum of 0 and maximum of 255 as shown in Example HID Report Descriptor (page 87) for efficiency. Otherwise, the descriptor shall individually enumerate each HID Keyboard/Keypad page usage the keyboard is capable of sending.

Keyboards shall implement individual keys emitting the following HID Keyboard/Keypad page usages:

Table 14-1 Required HID Keyboard/Keypad Page (`0x07`) controls for use by keyboards

Usage ID	Usage Name	Apple Function
`0x0004`	a and A	a and A
`0x0005`	b and B	b and B
`0x0006`	c and C	c and C
`0x0007`	d and D	d and D
`0x0008`	e and E	e and E
`0x0009`	f and F	f and F
`0x000A`	g and G	g and G
`0x000B`	h and H	h and H
`0x000C`	i and I	i and I
`0x000D`	j and J	j and J
`0x000E`	k and K	k and K
`0x000F`	l and L	l and L
`0x0010`	m and M	m and M
`0x0011`	n and N	n and N
`0x0012`	o and O	o and O
`0x0013`	p and P	p and P
`0x0014`	q and Q	q and Q
`0x0015`	r and R	r and R
`0x0016`	s and S	s and S
`0x0017`	t and T	t and T
`0x0018`	u and U	u and U
`0x0019`	v and V	v and V
`0x001A`	w and W	w and W
`0x001B`	x and X	x and X
`0x001C`	y and Y	y and Y
`0x001D`	z and Z	z and Z
`0x001E`	1 and !	1 and !
`0x001F`	2 and @	2 and @
`0x0020`	3 and #	3 and #

2023-10-10 | Copyright © 2023 Apple Inc. All Rights Reserved.

Usage ID	Usage Name	Apple Function
0x0021	4 and $	4 and $
0x0022	5 and %	5 and %
0x0023	6 and ^	6 and ^
0x0024	7 and &	7 and &
0x0025	8 and *	8 and *
0x0026	9 and (	9 and (
0x0027	0 and)	0 and)
0x0028	Return/Enter	Return
0x002A	Delete/Backspace	Delete
0x002B	Tab	Tab
0x002C	Spacebar	Spacebar
0x002D	- and _	- and _
0x002E	= and +	= and +
0x002F	[and {	[and {
0x0030	] and }	] and }
0x0031	\ and |	\ and |
0x0033	; and :	; and :
0x0034	' and "	' and "
0x0035	Grave Accent and Tilde	` and ~
0x0036	, and <	, and <
0x0037	. and >	. and >
0x0038	/ and ?	/ and ?
0x0039	CapsLock	Caps Lock
0x004F	RightArrow	Right Arrow
0x0050	LeftArrow	Left Arrow
0x0051	DownArrow	Down Arrow
0x0052	UpArrow	Up Arrow
0x00E1	LeftShift	Left Shift
0x00E2	LeftAlt	Left Option / Alt
0x00E3	LeftGUI	Left Command / ⌘
0x00E5	RightShift	Right Shift
0x00E6	RightAlt	Right Option / Alt
0x00E7	RightGUI	Right Command / ⌘

Keyboards may implement individual keys emitting the following HID Keyboard/Keypad page usages:

2023-10-10 | Copyright © 2023 Apple Inc. All Rights Reserved.

Table 14-2 Optional HID Keyboard/Keypad Page (0x07) controls for use by keyboards

Usage ID	Usage Name	Apple Function
0x0029	Escape	Escape
0x00E0	LeftControl	Left Control
0x00E4	RightControl	Right Control
0x004A	Home	Home
0x004D	End	End
0x0054	Keypad /	Keypad /
0x0055	Keypad *	Keypad *
0x0056	Keypad -	Keypad -
0x0057	Keypad +	Keypad +
0x0058	Keypad Enter	Keypad Enter
0x0059	Keypad 1 and End	Keypad 1
0x005A	Keypad 2 and Down Arrow	Keypad 2
0x005B	Keypad 3 and PageDn	Keypad 3
0x005C	Keypad 4 and Left Arrow	Keypad 4
0x005D	Keypad 5	Keypad 5
0x005E	Keypad 6 and Right Arrow	Keypad 6
0x005F	Keypad 7 and Home	Keypad 7
0x0060	Keypad 8 and Up Arrow	Keypad 8
0x0061	Keypad 9 and PageUp	Keypad 9
0x0062	Keypad 0 and Insert	Keypad 0
0x0063	Keypad . and Delete	Keypad .
0x0067	Keypad =	Keypad =

Keyboards may implement individual keys emitting the following HID Consumer page usages:

Table 14-3 HID Consumer Page (0x0C) controls for use by keyboards

Usage ID	Usage Name	Apple Function
0x0030	Power	Lock
0x0040	Menu	Home Button
0x006F	Display Brightness Increment	Brighter
0x0070	Display Brightness Decrement	Dimmer
0x00B5	Scan Next Track	Transport Right
0x00B6	Scan Previous Track	Transport Left
0x00CD	Play/Pause	Play/Pause

2023-10-10 | Copyright © 2023 Apple Inc. All Rights Reserved.

Usage ID	Usage Name	Apple Function
0x00E2	Mute	Mute
0x00E9	Volume Increment	Louder
0x00EA	Volume Decrement	Softer
0x01AE	AL Keyboard Layout	Toggle Onscreen Keyboard
0x029D	AC Keyboard Layout Select	Globe Key
0x0221	AC Search	Spotlight
0x025B	Promote	Play More Like This
0x025C	Demote	Play Less Like This
0x0262	Add to Cart	Add to Wish List
0x02C3	Keyboard Physical Layout	Keyboard Physical Layout, see Table 14-5 (page 86).

Keyboards may implement individual keys emitting the following HID Generic Desktop page usages:

Table 14-4 HID Generic Desktop Page (0x01) controls for use by keyboards

Usage ID	Usage Name	Apple Function
0x009B	System Do Not Disturb	Toggle Focus Mode

Table 14-5 Keyboard Physical Layout Codes

Value	Description
1	101 (for example, US) - ANSI
3	102 (for example, German) - ISO
5	106 (DOS/V Japan) - JIS

JIS keyboards shall also implement additional keys found on the Japanese Apple Magic Keyboard. Non-JIS keyboards shall not implement the Japanese keys.

Table 14-6 Required HID Keyboard/Keypad Page (0x07) controls for use by JIS keyboards

Usage ID	Usage Name	Apple Function
0x0087	Keyboard International1	_
0x0089	Keyboard International3	¥
0x0090	LANG1	Switch to Previous Language
0x0091	LANG2	Switch to Next Language

2023-10-10 | Copyright © 2023 Apple Inc. All Rights Reserved.

14.2 Examples [中文]

14.2.1 Example HID Report Descriptor [中文]

```
USAGE PAGE (Generic Desktop)              05 01
USAGE (Keyboard)                          09 06
COLLECTION (Application)                  A1 01
  USAGE PAGE (LEDs)                       05 08
  LOGICAL MINIMUM (0)                     15 00
  LOGICAL MAXIMUM (1)                     25 01
  USAGE (Caps Lock)                       09 02
  REPORT SIZE (1)                         75 01
  REPORT COUNT (1)                        95 01
  OUTPUT (Data,Var,Abs)                   91 02
  REPORT SIZE (7)                         75 07
  REPORT COUNT (1)                        95 01
  OUTPUT (Cnst,Var,Abs)                   91 03
  USAGE PAGE (Keyboard)                   05 07
  USAGE MINIMUM (Keyboard Left Control)   19 E0
  USAGE MAXIMUM (Keyboard Right GUI)      29 E7
  REPORT SIZE (1)                         75 01
  REPORT COUNT (8)                        95 08
  INPUT (Data,Var,Abs)                    81 02
  LOGICAL MINIMUM (0)                     15 00
  LOGICAL MAXIMUM (255)                   26 FF 00
  USAGE MINIMUM (0)                       19 00
  USAGE MAXIMUM (255)                     2A FF 00
  REPORT SIZE (8)                         75 08
  REPORT COUNT (5)                        95 05
  INPUT (Data,Ary,Abs)                    81 00
  USAGE PAGE (Consumer Devices)           05 0C
  LOGICAL MINIMUM (0)                     15 00
  LOGICAL MAXIMUM (1)                     25 01
  USAGE (Menu)                            09 40
  USAGE (AC Search)                       0A 21 02
  USAGE (AL Keyboard Layout)              0A AE 01
  USAGE (Scan Previous Track)             09 B6
  USAGE (Play/Pause)                      09 CD
  USAGE (Scan Next Track)                 09 B5
  USAGE (Mute)                            09 E2
  USAGE (Volume Down)                     09 EA
  USAGE (Volume Up)                       09 E9
  USAGE (Power)                           09 30
  REPORT SIZE (1)                         75 01
  REPORT COUNT (10)                       95 0A
  INPUT (Data,Var,Abs)                    81 02
  REPORT SIZE (6)                         75 06
  REPORT COUNT (1)                        95 01
  INPUT (Cnst,Var,Abs)                    81 03
END COLLECTION                            C0
```

2023-10-10 | Copyright © 2023 Apple Inc. All Rights Reserved.

15. Trackpads

[中文]

Devices may accept user input from accessory trackpads.

This feature is supported on iPadOS 14.5 or later.

15.1 Requirements

[中文]

Accessory trackpads shall:

- Support the Human Interface Device (HID) (page 203) protocol.
- Not identify themselves as Apple-branded accessories, for example, using the Apple Vendor ID (VID).

Accessory trackpads exhibiting any of the following behaviors are explicitly prohibited:

- Emulate combinations of touch gestures.
- Emulate timed user actions, such as 'click and hold', drag, and zoom gestures.
- Send different HID usages depending on the state of another control surface.

All HID reports sent from the accessory trackpad shall occur in response to a Direct User Action (page 22).

Trackpads shall support 2-5 simultaneous contacts on the digitizer surface.

15.1.1 Integration with Keyboards

[中文]

Accessory trackpads shall be integrated with Keyboards (page 82) and simultaneously support both input methods. The following are examples of interactions involving both keyboard and trackpad input:

- Rapidly transitioning between cursor movement and keyboard entry.
- Pressing and holding modifier keys while performing a drag.
- Pressing ⌘-Tab to see the app switcher, then using the cursor to switch apps.
- Dragging an item using the trackpad, followed by pressing ⌘-Tab to switch apps.

15.1.2 HID Report Descriptor

[中文]

HID report descriptors for an accessory trackpad shall declare support for the HID Digitizer Page.

Accessory trackpads shall implement the following HID Digitizer page usages:

2023-10-10 | Copyright © 2023 Apple Inc. All Rights Reserved.

Table 15-1 Required HID Digitizer Page (0x0D) controls for use by accessory trackpads

Usage ID	Usage Name	Apple Function
0x01	Button 1	Primary button state
0x05	Report ID	Feature Report ID
0x22	Finger	Number of contact collection points
0x30	X	X coordinate of contact position
0x31	Y	Y coordinate of contact position
0x38 or 0x51	Transducer Index or Contact ID	Index (from 0-4) uniquely identifying the finger/contact
0x42	Tip Switch	Contact is on the surface of the digitizer
0x47	Confidence	Touch is an intended, valid contact
0x57	Surface Switch	Digitizer surface on/off

Accessory trackpads may implement the following HID Digitizer page usages. These HID usages are recommended:

Table 15-2 Recommended HID Digitizer Page (0x0D) controls for use by accessory trackpads

Usage ID	Usage Name	Apple Function
0x02	Button 2	Secondary button state
0x56	Scan Time	Relative scan time
0xA1	Report Rate	Report rate (Hz)

15.1.3 Coexistence [中文]

Accessory trackpads shall:

- Not degrade the performance of Multi-Touch or Apple Pencil.
- Not support a drive voltage greater than 6 V_{pp}.
- Not support drive frequencies less than 500 kHz.
- Support 3 or more drive frequencies, separated by at least 50 kHz each.
- Dynamically switch between drive frequencies whenever effective resolution drops below 120 DPI. For example, effective resolution may drop in the presence of 50 mV RMS noise from external power sources.

Accessory trackpads should support a sine wave narrow band drive frequency.

15.1.4 Performance [中文]

Accessory trackpads shall:

2023-10-10 | Copyright © 2023 Apple Inc. All Rights Reserved.

- Behave uniformly across the digitizer surface.
- Uniquely detect contact points as close as 8 mm center to center.
- Detect contact sizes of at least 5 mm.
- Differentiate between multi-finger taps and single-finger drags.
- Maintain an effective input resolution less than 20 µm and immediately report positional updates greater than or equal to the effective input resolution.
- Maintain an effective resolution more than 600 DPI.
- Maintain the highest possible report rate to the device. Apple recommends 60 Hz or higher.
- Maintain a panning latency less than or equal to 23 ms.
- Maintain a touch down latency less than or equal to 35 ms.
- Maintain a positional accuracy less than or equal to 500 µm.
- Maintain a stationary contact jitter less than or equal to 210 µm.
- Not deviate more than 250 µm from an ideal line.

15.1.5 Input Confidence [中文]

Accessory trackpads shall:

- Set the Confidence usage when an input transitions from valid to invalid. Contact transitions should be quick, accurate, and stable to achieve the best user experience. Incorrect or fluctuating classification of contacts may result in recognition of unintended gestures, interruption, or cancelation of intended gestures.
- Detect and reject unintended/invalid inputs, such as palms, while continuing to report valid inputs to the device, such as multiple contacts.
- Distinguish between a valid large thumb and an invalid lightly resting palm.
- Reject inputs ≥1 mm from the tracking surface.

15.1.6 Click to Wake [中文]

Devices use Report ID usage to indicate to the trackpad whether surface contacts shall be reported or not. Devices will use the Surface Switch usage to tell the accessory to go into Click to Wake mode where only button clicks are accepted. Trackpads may use this opportunity to go into a low power mode where the digitizer surface does not have to be constantly scanned.

This feature report also doubles as an informational report. Devices may query the accessory trackpad at any time after enumeration to obtain the current state of the Surface Switch, and also to get the accessory's Report Rate.

2023-10-10 | Copyright © 2023 Apple Inc. All Rights Reserved.

15.2 Examples [中文]

15.2.1 Example HID Report Descriptor [中文]

The following descriptor is for a 92.10 mm x 50.60 mm trackpad with two buttons supporting up to five simultaneous contacts.

Additional modifications may be necessary in order to implement this HID report descriptor in the accessory trackpad firmware, specifically:

- Modify physical maximum values for X (`0x30`) and Y (`0x31`) positions of each finger to match the physical size of the accessory trackpad. Units are in tenths of a mm (0.1 mm). In the example, X goes from `0x0` to `0x0399` (92.10 mm) and Y goes from `0x0` to `0x01FA` (50.60 mm).
- Modify logical maximum values for the X (`0x30`) and Y (`0x31`) of each finger positions to match the resolution of the accessory trackpad. In the example, X (`0x30`) goes from 0 to `0x0451` (for a resolution of 92.10/1105 = ~0.083 mm) and Y (`0x31`) goes from 0 to `0x025F` (for the same resolution of 50.60/607 = ~0.083 mm).

```
USAGE PAGE (Digitizer Device Page)                  05 0D
USAGE (Touch Pad)                                   09 05
COLLECTION (Application)                            A1 01
  REPORT_ID (3)                                     85 03
  LOGICAL MAXIMUM (65535)                           27 FF FF 00 00
  USAGE (Relative Scan Time (DV=Dynamic Value))     09 56
  REPORT SIZE (16)                                  75 10
  REPORT COUNT (1)                                  95 01
  INPUT (Data,Var,Abs)                              81 02
  LOGICAL MAXIMUM (1)                               25 01
  REPORT SIZE (1)                                   75 01
  USAGE (Surface Switch)                            09 57
  FEATURE (Data,Var,Abs)                            B1 02
  LOGICAL MAXIMUM (32767)                           26 FF 7F
  REPORT SIZE (15)                                  75 0F
  USAGE (Report Rate)                               09 A1
  FEATURE (Data,Var,Abs)                            B1 02
  USAGE PAGE (Button Page)                          05 09
  LOGICAL MAXIMUM (1)                               25 01
  USAGE MINIMUM (Button 1)                          19 01
  USAGE MAXIMUM (Button 2)                          29 02
  REPORT COUNT (2)                                  95 02
  REPORT SIZE (1)                                   75 01
  INPUT (Data,Var,Abs)                              81 02
  REPORT COUNT (6)                                  95 06
  INPUT (Cost, Ary, Abs)                            81 01
  USAGE PAGE (Digitizer Device Page)                05 0D
  USAGE (Finger)                                    09 22
  COLLECTION (Physical)                             A1 00
  USAGE (Tip Switch)                                09 42
  USAGE (Confidence)                                09 47
```

2023-10-10 | Copyright © 2023 Apple Inc. All Rights Reserved.

```
REPORT COUNT (2)                                95 02
INPUT (Data,Var,Abs)                            81 02
LOGICAL MAXIMUM (5)                             25 05
USAGE (Transducer Index)                        09 38
REPORT SIZE (6)                                 75 06
REPORT COUNT (1)                                95 01
INPUT (Data,Var,Abs)                            81 02
USAGE PAGE (Generic Desktop Page)               05 01
PHYSICAL MAXIMUM (921)                          46 99 03
PHYSICAL MINIMUM (0)                            35 00
LOGICAL MAXIMUM (1105)                          26 51 04
REPORT SIZE (12)                                75 0C
UNIT EXPONENT (Unit Value x .01)                55 0E
GLOBAL UNIT (Distance in centimeters)           65 11
USAGE (X)                                       09 30
INPUT (Data,Var,Abs)                            81 02
PHYSICAL MAXIMUM (506)                          46 FA 01
LOGICAL MAXIMUM (607)                           26 5F 02
USAGE (Y)                                       09 31
INPUT (Data,Var,Abs)                            81 02
END COLLECTION (Physical)                       C0
USAGE PAGE (Digitizer Device Page)              05 0D
USAGE (Finger)                                  09 22
COLLECTION (PHYSICAL)                           A1 00
LOGICAL MAXIMUM (1)                             25 01
USAGE (Tip Switch)                              09 42
USAGE (Confidence)                              09 47
REPORT SIZE (1)                                 75 01
REPORT COUNT (2)                                95 02
INPUT (Data,Var,Abs)                            81 02
USAGE (Transducer Index)                        09 38
LOGICAL MAXIMUM (5)                             25 05
REPORT SIZE (6)                                 75 06
REPORT COUNT (1)                                95 01
INPUT (Data,Var,Abs)                            81 02
USAGE PAGE (Generic Desktop Page)               05 01
PHYSICAL MAXIMUM (921)                          46 99 03
LOGICAL MAXIMUM (1105)                          26 51 04
REPORT SIZE (12)                                75 0C
USAGE (X)                                       09 30
INPUT (Data,Var,Abs)                            81 02
PHYSICAL MAXIMUM (506)                          46 FA 01
LOGICAL MAXIMUM (607)                           26 5F 02
USAGE (Y)                                       09 31
INPUT (Data,Var,Abs)                            81 02
END COLLECTION (Physical)                       C0
USAGE PAGE (Digitizer Device Page)              05 0D
USAGE (Finger)                                  09 22
COLLECTION (Physical)                           A1 00
LOGICAL MAXIMUM (1)                             25 01
USAGE (Tip Switch)                              09 42
USAGE (Confidence)                              09 47
REPORT SIZE (1)                                 75 01
```

2023-10-10 | Copyright © 2023 Apple Inc. All Rights Reserved.

```
REPORT COUNT (2)                        95 02
INPUT (Data,Var,Abs)                    81 02
USAGE (Transducer Index)                09 38
LOGICAL MAXIMUM (5)                     25 05
REPORT SIZE (6)                         75 06
REPORT COUNT (1)                        95 01
INPUT (Data,Var,Abs)                    81 02
USAGE PAGE (Generic Desktop Page)       05 01
PHYSICAL MAXIMUM (921)                  46 99 03
LOGICAL MAXIMUM (1105)                  26 51 04
REPORT SIZE (12)                        75 0C
USAGE (X)                               09 30
INPUT (Data,Var,Abs)                    81 02
PHYSICAL MAXIMUM (506)                  46 FA 01
LOGICAL MAXIMUM (607)                   26 5F 02
USAGE (Y)                               09 31
INPUT (Data,Var,Abs)                    81 02
END COLLECTION (PHYSICAL)               C0
USAGE PAGE (Digitizer Device Page)      05 0D
USAGE (Finger)                          09 22
COLLECTION (PHYSICAL)                   A1 00
LOGICAL MAXIMUM (1)                     25 01
USAGE (Tip Switch)                      09 42
USAGE (Confidence)                      09 47
REPORT SIZE (1)                         75 01
REPORT COUNT (2)                        95 02
INPUT (Data,Var,Abs)                    81 02
USAGE (Transducer Index)                09 38
LOGICAL MAXIMUM (5)                     25 05
REPORT SIZE (6)                         75 06
REPORT COUNT (1)                        95 01
INPUT (Data,Var,Abs)                    81 02
USAGE PAGE (Generic Desktop Page)       05 01
PHYSICAL MAXIMUM (921)                  46 99 03
LOGICAL MAXIMUM (1105)                  26 51 04
REPORT SIZE (12)                        75 0C
USAGE (X)                               09 30
INPUT (Data,Var,Abs)                    81 02
PHYSICAL MAXIMUM (506)                  46 FA 01
LOGICAL MAXIMUM (607)                   26 5F 02
USAGE (Y)                               09 31
INPUT (Data,Var,Abs)                    81 02
END COLLECTION (Physical)               C0
USAGE PAGE (Digitizer Device Page)      05 0D
USAGE (Finger)                          09 22
COLLECTION (PHYSICAL)                   A1 00
LOGICAL MAXIMUM (1)                     25 01
USAGE (Tip Switch)                      09 42
USAGE (Confidence)                      09 47
REPORT SIZE (1)                         75 01
REPORT COUNT (2)                        95 02
INPUT (Data,Var,Abs)                    81 02
USAGE (Transducer Index)                09 38
```

2023-10-10 | Copyright © 2023 Apple Inc. All Rights Reserved.

```
  LOGICAL MAXIMUM (5)                          25 05
  REPORT SIZE (6)                              75 06
  REPORT COUNT (1)                             95 01
  INPUT (Data,Var,Abs)                         81 02
  USAGE PAGE (Generic Desktop Page)            05 01
  PHYSICAL MAXIMUM (921)                       46 99 03
  LOGICAL MAXIMUM (1105)                       26 51 04
  REPORT SIZE (12)                             75 0C
  USAGE (X)                                    09 30
  INPUT (Data,Var,Abs)                         81 02
  PHYSICAL MAXIMUM (506)                       46 FA 01
  LOGICAL MAXIMUM (607)                        26 5F 02
  USAGE (Y)                                    09 31
  INPUT (Data,Var,Abs)                         81 02
  END COLLECTION (Physical)                    C0
END COLLECTION (Application)                   C0
```

15.2.2 Example Trackpad [中文]

The following HID reports are for a 60 Hz accessory trackpad using the Example HID Report Descriptor (page 91):

1. Two contacts are made on the surface of the accessory trackpad.
   `03000000 0300100F 0700C016 00000000 00000000 00000000`

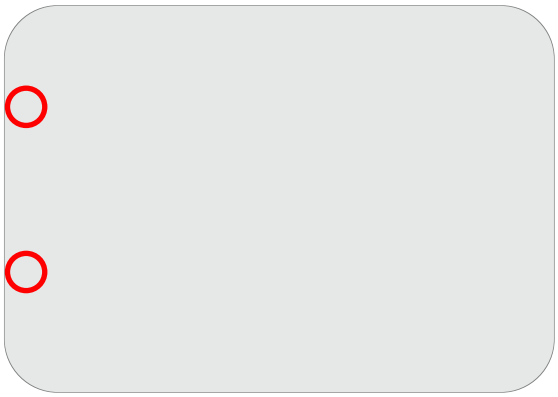

2. Two contacts move simultaneously along the X axis.
   `03A70000 0314110F 0714C116 00000000 00000000 00000000`

2023-10-10 | Copyright © 2023 Apple Inc. All Rights Reserved.

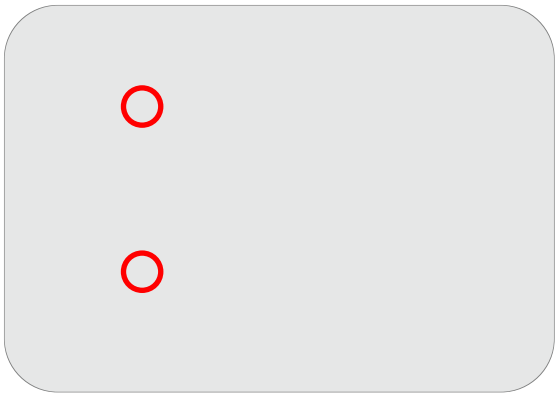

3. Two contacts continue moving until they reach the center of the digitizer surface.
`034E0100 0328120F 0728C216 00000000 00000000 00000000`

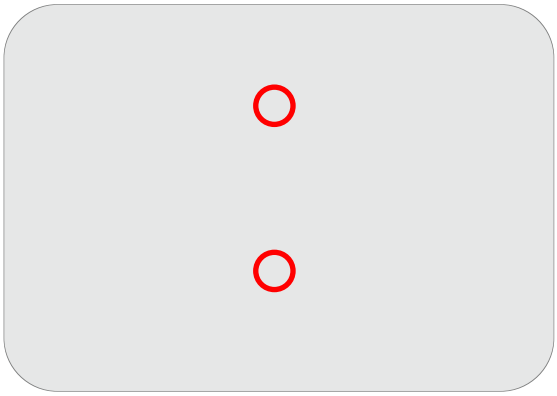

4. One contact is removed. Confidence for removed contact is still 1 and its coordinates are unchanged.
`03F50100 0328120F 0628C216 00000000 00000000 00000000`

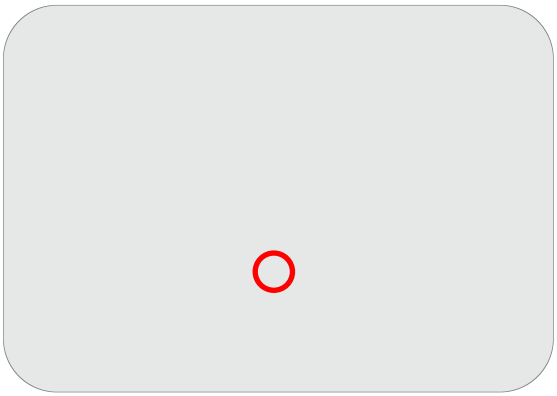

5. Remaining contact moves to the exact center of the digitizer surface. Confidence and coordinates of the removed contact are now 0.
`039C0200 0328F212 00000000 00000000 00000000 00000000`

2023-10-10 | Copyright © 2023 Apple Inc. All Rights Reserved.

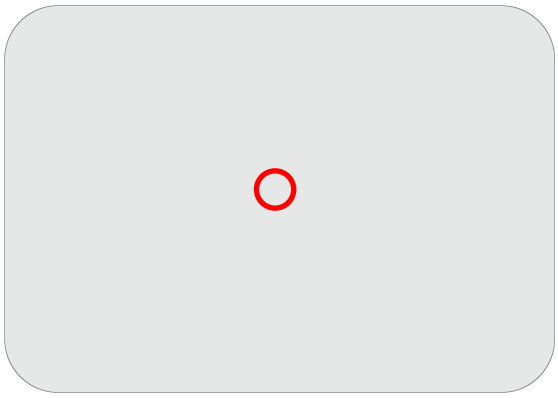

6. Button 1 is clicked.
   `03430301 0328F212 00000000 00000000 000000000 0000000`

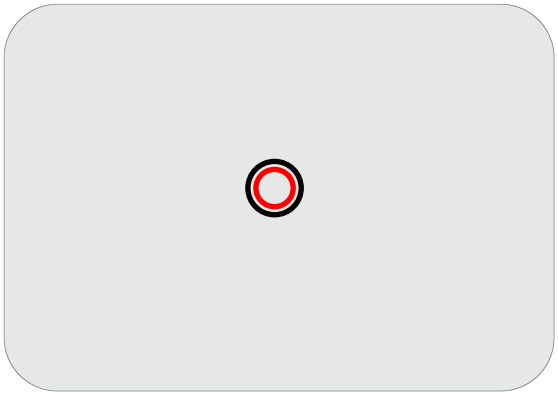

7. Button 1 is un-clicked and contact is removed. Confidence for removed contact is still 1 and its coordinates are unchanged.
   `03EA0300 0228F212 00000000 00000000 00000000 00000000`

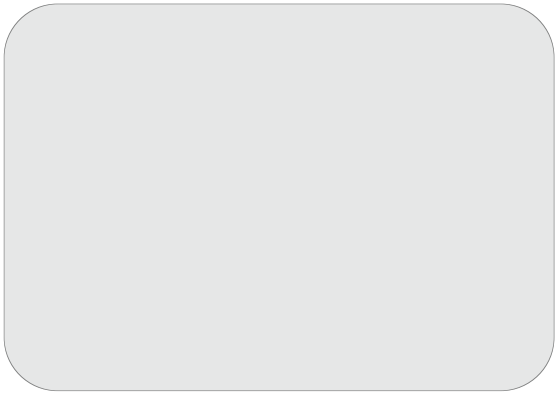

2023-10-10 | Copyright © 2023 Apple Inc. All Rights Reserved.

16. External Storage

[中文]

Devices support external storage, such as USB drives and SD card readers, to:

- Store and access files.
- Import and export photos.
- Record video.

16.1 Requirements

[中文]

Accessories may support moving data to or from a device using the following:

- *USB Mass Storage Class Specification Overview, Version 1.4*, see https://www.usb.org/document-library/mass-storage-class-specification-overview-14.
- External Accessory Protocol (page 142).

16.2 ProRes 4K up to 60 fps

[中文]

To support ProRes capture up to 60 fps at 4K to external USB storage, the accessory shall:

- Sustain a write speed of at least 220 MB/s.
- Maintain the write speed until the USB storage is at capacity.
- Not exceed 900 mA of current draw at any point in time. See Accessory Power (USB-C) (page 121).

2023-10-10 | Copyright © 2023 Apple Inc. All Rights Reserved.

17. AirPods Accessories

[中文]

Accessories shall not interfere with AirPods operation. Keep-out regions can be found in the device dimensional drawings, see:

- AirPods Pro (2nd generation) (page 461).
- AirPods (3rd generation) (page 463).
- AirPods Pro (1st generation) (page 465).
- AirPods (1st generation) and AirPods (2nd generation) (page 467).

17.1 Charging Case Covers

[中文]

Charging case covers shall:

- Not interfere with AirPods charging case operation.
- Have a uniform thickness across the metal keep-out region.
- Not exceed 2.5 mm in thickness. Apple recommends 1.0 mm for maximum compatibility with inductive transmitters.

Keep-out regions can be found in the device dimensional drawings, see:

- MagSafe Charging Case (USB-C) for AirPods Pro (2nd generation) 1 of 3 (page 455).
- MagSafe Charging Case for AirPods Pro (2nd generation) 1 of 3 (page 458).
- MagSafe Charging Case for AirPods (3rd generation) (page 462).
- Wireless Charging Case for AirPods Pro (1st generation) (page 464).
- Wireless Charging Case for AirPods (page 466).

Case covers claiming compatibility with Apple Watch chargers shall not obstruct the Apple Watch charger keep-out region, see:

- MagSafe Charging Case (USB-C) for AirPods Pro (2nd generation) 2 of 3 (page 456).
- MagSafe Charging Case for AirPods Pro (2nd generation) 2 of 3 (page 459).

17.2 Chargers

[中文]

Charging accessories shall be physically compatible with all charging cases.

Charging accessories with integrated:

2023-10-10 | Copyright © 2023 Apple Inc. All Rights Reserved.

- Lightning connectors shall meet the requirements for iPhone/iPod in Device Power (Lightning) (page 133).
- Inductive transmitters shall meet the requirements in Device Power (Inductive) (page 138).

17.3 Test Procedures [中文]

Test procedures for AirPods accessories.

17.3.1 Power [中文]

Power test procedures for AirPods charging case covers.

17.3.1.1 Equipment [中文]

Equipment necessary to perform the power test procedure:

- AirPods.
- AirPods charging case.
- AirPods charging case cover.
- Apple MagSafe Charger.
- Device running iOS 17.0 or later.

17.3.1.2 Test Environment and Setup [中文]

1. Insert AirPods into charging case.
2. Unlock the device and open the charging case lid.
3. Pair AirPods with the device, if necessary.
4. Using the device, verify the state of charge for:
   a. Charging case is less than 80%.
   b. AirPods is less than 50%.
5. Close the charging case lid.
6. Verify the MagSafe charger is plugged into a functional power source.
7. Place the charging case onto the MagSafe charger on a flat surface.
8. Verify the charging case LED turns on momentarily.
9. Monitor the charging case LED for 30 seconds and verify the LED turns off.
10. Tap the charging case and verify the LED turns on momentarily.

17.3.1.3 MagSafe Charging [中文]

1. Attach the accessory to the AirPods charging case.
2. Place the charging case and attached accessory onto a MagSafe charger on a flat surface.

2023-10-10 | Copyright © 2023 Apple Inc. All Rights Reserved.

3. Verify the charging case LED turns on momentarily.
4. Monitor the charging case LED for 30 seconds and verify the LED turns off.
5. Tap the charging case and verify the LED turns on momentarily.

2023-10-10 | Copyright © 2023 Apple Inc. All Rights Reserved.

18. Watch Bands

[中文]

A well-designed watch band will securely attach to Apple Watch without interfering with Apple Watch operation. See Device Dimensional Drawings (page 253) for Apple Watch dimensional drawings with defined keep-out zones.

18.1 Requirements

[中文]

Watch bands for Apple Watch shall integrate two lugs to mate with the Apple Watch Band Interface (page 103). Apple Watch uses a high precision interface profile, see https://developer.apple.com/accessories/apple-watch-lug-profile.zip for a sample 2D lug profile. Lugs should lock into the watch band mating slot with a 'lug latch' feature to prevent accidental removal of the watch band.

Exposed edges of watch bands and lugs shall pass UL 1439 tests for sharpness of edges on equipment and BS EN 71-1:2014, *Safety of Toys - Mechanical and physical properties*.

The lug latch shall never become jammed in the extended position.

Watch bands shall not integrate magnetic chargers.

Watch bands and lugs should:

- Pass a 72 hour salt mist test as specified in ASTM B117 with no visible corrosion.
- Resist a 5-20 kgf lateral slide-out force when installed in Apple Watch.
- Resist a 20 kgf or greater pull force as specified in ISO-6245:1996, *Specifications for Diver's Watches*, section 7.3.
- Detach easily from Apple Watch when the watch band release buttons are pressed.
- Take into account the weight of Apple Watch.

Watch bands shall enable the user to maintain direct skin contact with Apple Watch heart sensors and the back of Apple Watch, and shall incorporate sufficient margin to compensate for shifting or dimensional changes of the watch band material. Failure to do so may interfere with Apple Watch wrist detect and Apple Pay features. Watch bands should:

- Have length sizing adjustment pitch of less than 7 mm (center to center).
- Provide sufficient adjustability for the user to achieve a snug, yet comfortable fit preventing movement of Apple Watch relative to the wearer's skin.

2023-10-10 | Copyright © 2023 Apple Inc. All Rights Reserved.

Watch bands intended for use during exercise should maintain a snug fit through a full range of motion to maintain compatibility with Apple Watch heart sensors.

Apple recommends the following materials for lug bodies:

- 75 Shore A silicone.
- 50-55% glass-filled nylon.
- 240-270HV 316L / EN 1.4435 stainless steel.

Apple recommends the following materials for lug latches:

- 50-55% glass-filled nylon.
- 240-270HV 316L / EN 1.4435 stainless steel.

Watch bands for Apple Watch shall comply with applicable environmental regulations for the regions in which the watch bands are to be sold, and any applicable substance or material restrictions, including applicable restrictions on:

- Organic tin compounds, PFOS, PFOA, phthalates, azo dyes, polybrominated biphenyls (PBBs) and PAHs, per requirements of the EU REACh regulation EC 1907/2006.
- Nickel leach rate on surfaces in prolonged skin contact, per requirements of the EU REACh regulation EC 1907/2006.
- Cadmium, lead, hexavalent chromium, and nickel, per requirements of EU Directive 2009/48/EC.
- Natural rubber latex, per requirements of EU Directive EC 93/42/EEC.
- Dimethylfumarate (DMFu), per requirements of EU Regulation 412/2012.
- pH and Formaldehyde, per requirements of China GB 18401 for textiles and China GB 20400 for leather.
- Endangered species of flora and fauna in products or packaging (US Lacey Act).
- Polybrominated diphenyl ethers (PBDE).

2023-10-10 | Copyright © 2023 Apple Inc. All Rights Reserved.

18.2 Apple Watch Band Interface

[中文]

NOTES:

1. EXPOSED EDGES MUST CONFORM TO UL 1439: TESTS FOR SHARPNESS OF EDGES ON EQUIPMENT AND BS EN71-1: SAFETY OF TOYS.
2. EDGES MUST BE FREE FROM BURRS/FLASH
3. SEE LUG PROFILE CAD ON APPLE DEVELOPER WEBSITE

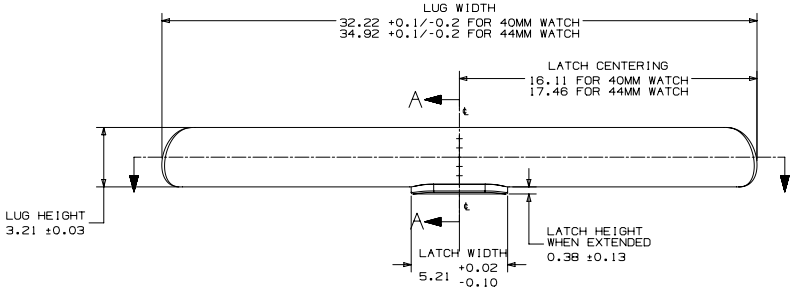

LATCH EXTENDED

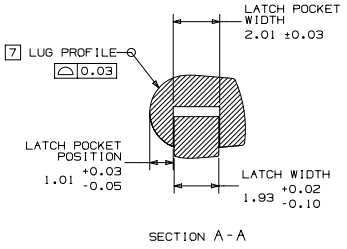

SECTION A-A

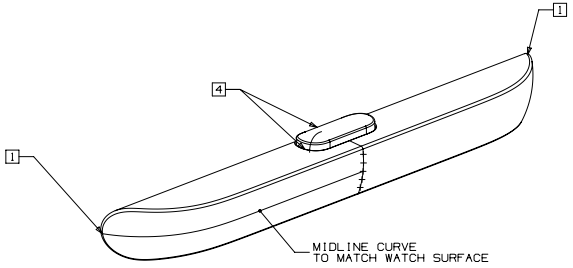

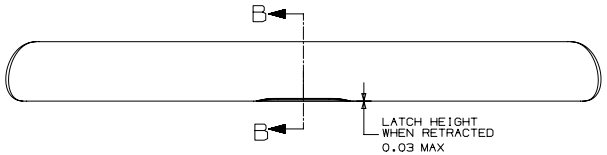

LATCH RETRACTED

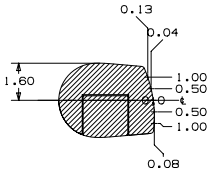

SECTION B-B

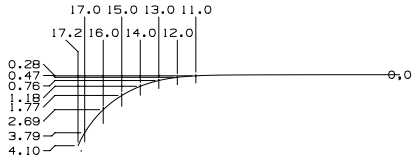

CURVE AT LUG MIDLINE, 44MM WATCH

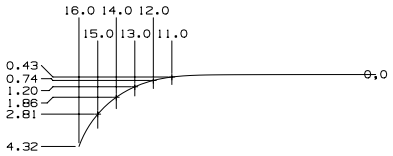

CURVE AT LUG MIDLINE, 40MM WATCH

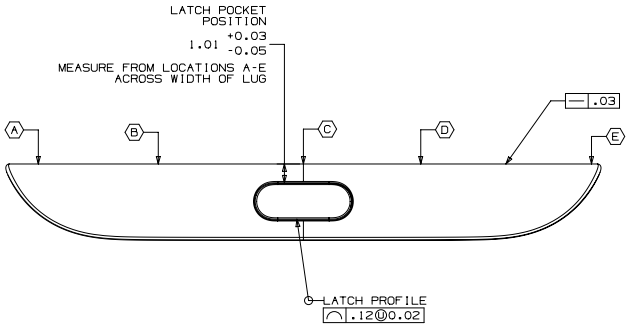

REV	ECO#	DESCRIPTION OF REVISION

METRIC	Apple Inc.
DRAFTER: APPLE INC. DATE: 09/21/18	NOTICE OF PROPRIETARY PROPERTY: THE INFORMATION CONTAINED HEREIN IS THE PROPRIETARY PROPERTY OF APPLE INC. THE POSSESSOR AGREES TO THE FOLLOWING: (i) TO MAINTAIN THIS DOCUMENT IN CONFIDENCE (ii) NOT TO REPRODUCE OR COPY IT (iii) NOT TO REVEAL OR PUBLISH IT IN WHOLE OR PART (iv) ALL RIGHTS RESERVED
DESIGNER: APPLE INC. DATE: 09/21/18	
DIMENSIONS ARE IN MILLIMETERS TOLERANCES	TITLE: APPLE WATCH BAND INTERFACE
DO NOT SCALE DRAWINGS	DRAWING NUMBER — REV. 01
THIRD ANGLE PROJECTION — SIZE D	SCALE NONE — SHT 1 OF 1

NX GENERATED

18.3 Example Apple Watch Lug Assembly [中文]

Assembly instructions are based on Example Apple Watch Lug (page 106) and an assembly fixture with a clamping mechanism.

Proper assembly of the lug is critical to ensure the watch band securely attaches to Apple Watch. Improper assembly may result in damage to Apple Watch and/or the watch band.

Screw threads should be secured with Loctite 435. Previously installed/used screws should not be reused.

The assembly fixture should hold the lug assembly in place and a clamping mechanism should compress the lug during screw insertion.

Assemble the watch band and lug as follows, see Figure 18-1 (page 105).

1. Lightly insert the long end of the female pin in the watch band until hard stop. Ensure there is no warping or damage in the watch band.
2. Lightly insert the long end of the male pin in the other side of the band until it interlocks with the female pin and both pins are seated together. Ensure there is no warping or damage in the watch band.
3. Align the holes on the bottom of the lug with the exposed ends of the female and male pins. Note lug latch top/bottom orientation relative to the watch band. Latch shall be on the side of the watch band against the wrist.
4. Apply Loctite 435 to screw threads.
5. Install both screws using the following specification:
   - Torque: 1.1 kgf-cm ±10%
   - RPM: 120 ±10%
6. Visually inspect at 1200-1400 lux for screw proudness and cross-threading.
7. Ensure screws are just sub-flush to the lowest part of the counterbore and appear parallel to the long axis of the lug.
8. Ensure screws are undamaged, flat, and concentric with the counterbore.

2023-10-10 | Copyright © 2023 Apple Inc. All Rights Reserved.

Figure 18-1 Apple Watch Lug Assembly Fixture

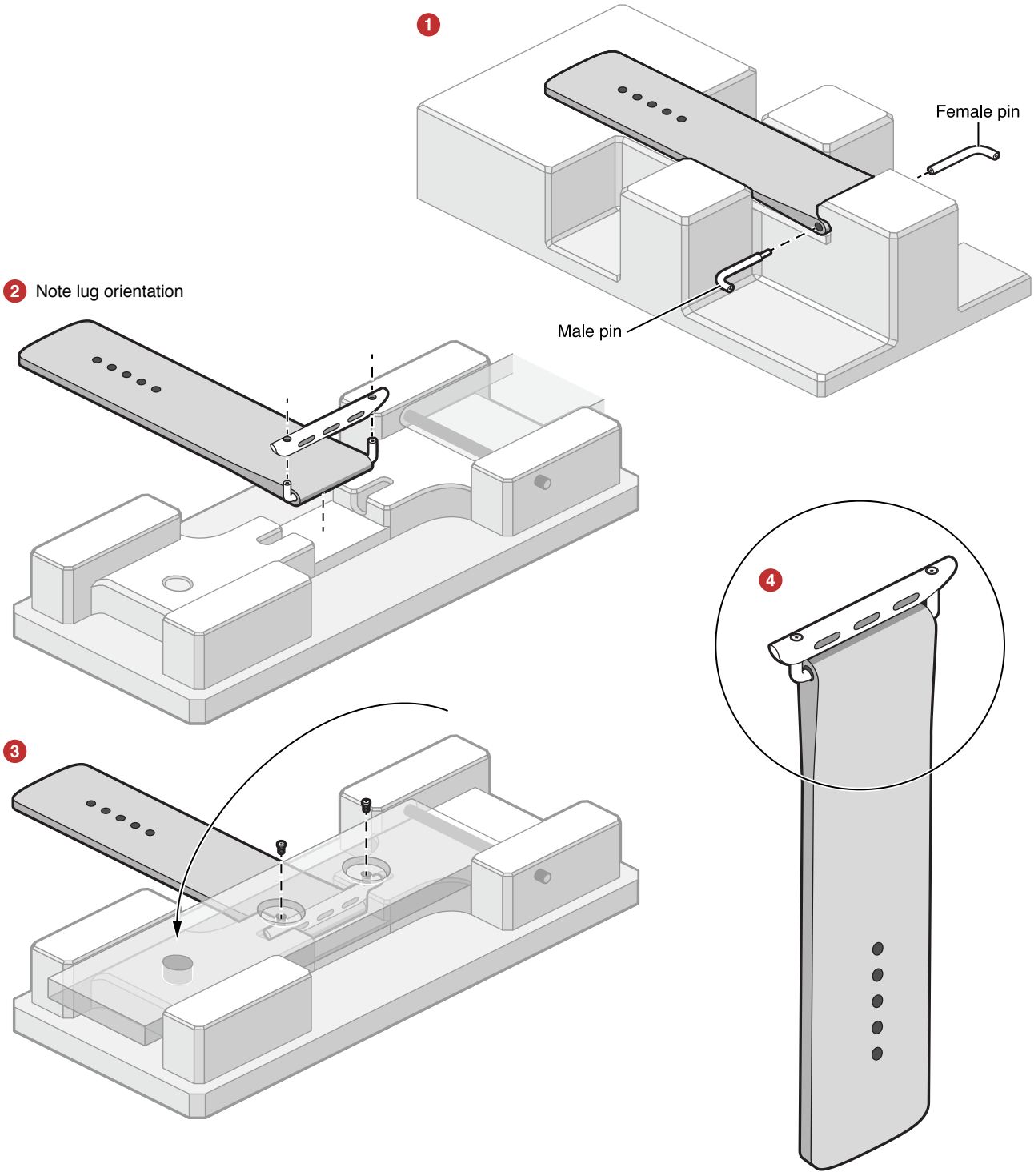

2023-10-10 | Copyright © 2023 Apple Inc. All Rights Reserved.

18.4 Example Apple Watch Lug

[中文]

REV	ECO#	DESCRIPTION OF REVISION

NOTES: (UNLESS OTHERWISE SPECIFIED)

1. EXPOSED EDGES MUST CONFORM TO UL 1439: TESTS FOR SHARPNESS OF EDGES ON EQUIPMENT AND BS EN71-1: SAFETY OF TOYS.

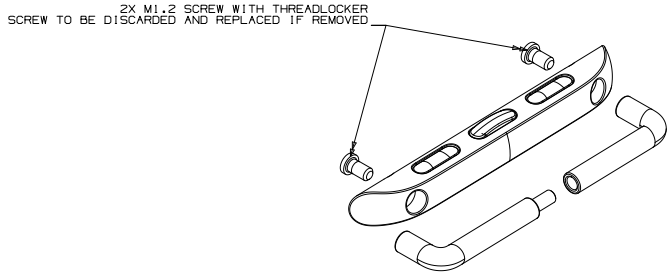

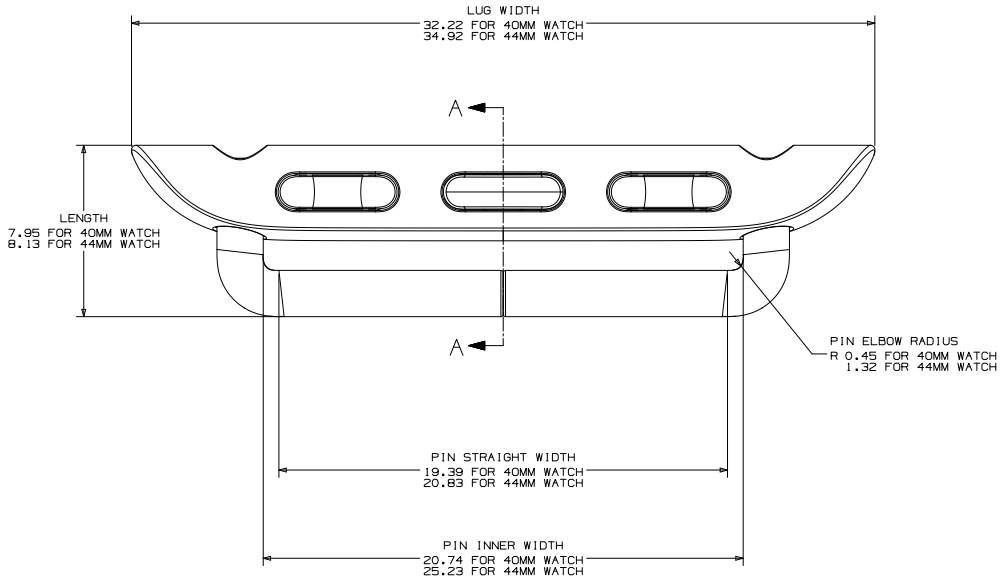

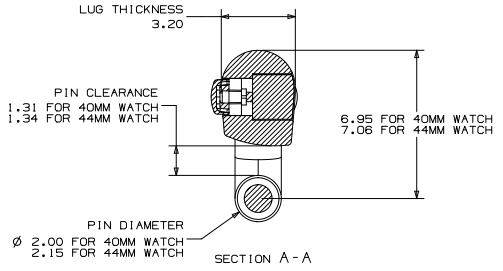

METRIC	Apple Inc.
DRAFTER: APPLE INC. — DATE: 09/21/18	NOTICE OF PROPRIETARY PROPERTY: THE INFORMATION CONTAINED HEREIN IS THE PROPRIETARY PROPERTY OF APPLE INC. THE POSSESSOR AGREES TO THE FOLLOWING: (i) TO MAINTAIN THIS DOCUMENT IN CONFIDENCE (ii) NOT TO REPRODUCE OR COPY IT (iii) NOT TO REVEAL OR PUBLISH IT IN WHOLE OR PART (iv) ALL RIGHTS RESERVED
DESIGNER: APPLE INC. — DATE: 09/21/18	
DIMENSIONS ARE IN MILLIMETERS TOLERANCES	TITLE: APPLE WATCH LUG
	DRAWING NUMBER — REV. 01
DO NOT SCALE DRAWINGS	
THIRD ANGLE PROJECTION — SIZE D — SCALE NONE — SHT 1 OF 4	

NX GENERATED

19. StandBy Mounts

[中文]

StandBy provides iPhone users a full-screen experience with glanceable information designed to be viewed from a distance when iPhone is in landscape orientation, locked, and charging. StandBy can be personalized to display a range of widgets and supports Live Activities, Siri, incoming calls, and notifications. StandBy remembers user's preferred views when using MagSafe.

This feature is supported on iOS 17.0 or later.

Figure 19-1 StandBy example

2023-10-10 | Copyright © 2023 Apple Inc. All Rights Reserved.

19.1 Product Design

[中文]

Figure 19-2 StandBy Mount example

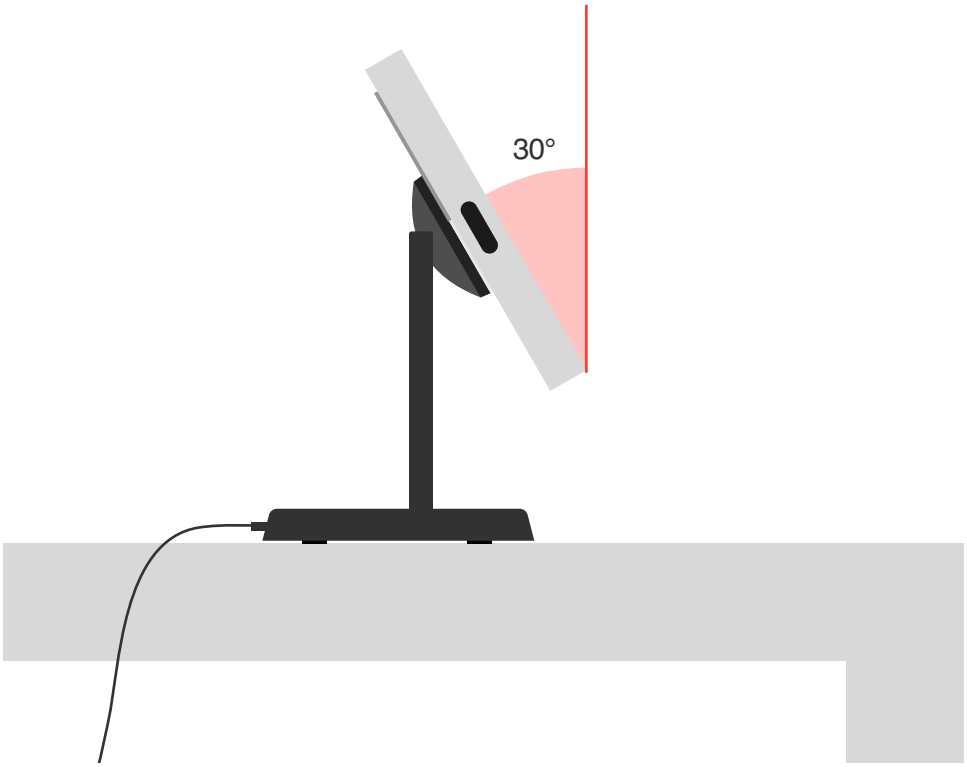

StandBy Mounts:

- Shall support landscape orientation.
- Shall support inductive or wired device charging.
- Shall not obstruct or touch the device cover glass or any device sensors.
- Shall not cause Scratches and Damage (page 25).
- Should prevent free rotation of the device.
- Should enable an adjustable backward tilt of at least 30° for optimal visibility.
- Should be stable to prevent unintentionally exiting StandBy.
- Should not obstruct Access to Controls (page 32).
- Should implement the MagSafe Accessory Magnet Array (page 156).

2023-10-10 | Copyright © 2023 Apple Inc. All Rights Reserved.

19.2 Test Procedures [中文]

19.2.1 Equipment [中文]

The following equipment is necessary:

- Supported device running iOS 17.0 or later.
- A charger, if not integrated in accessory.

19.2.2 Enable StandBy [中文]

1. Attach locked device in landscape orientation to the accessory.
2. Attach a charger if the accessory does not integrate inductive or wired charging.
3. Verify device enters StandBy within a few seconds.

19.2.3 Product Design [中文]

Verify the StandBy Mount:

1. Supports landscape orientation.
2. Does not obstruct or touch the device cover glass or any device sensors.
3. Does not scratch or damage device.

2023-10-10 | Copyright © 2023 Apple Inc. All Rights Reserved.

20. Continuity Camera Mounts

[中文]

Continuity Camera enables device cameras to be used with Apple TV or Mac and supports Portrait, Studio Light, Center Stage, and Desk View video effects. See https://support.apple.com/kb/HT213244 for more information. This feature is supported on iOS 16.0, iPadOS 16.0, macOS 13.0 Ventura, tvOS 17.0, or later and Apple TV 4K (2nd generation) or later.

Continuity Camera Mounts securely hold a device at the optimal height and angle to use with FaceTime and other apps.

Figure 20-1 Continuity Camera MacBook Desk View example

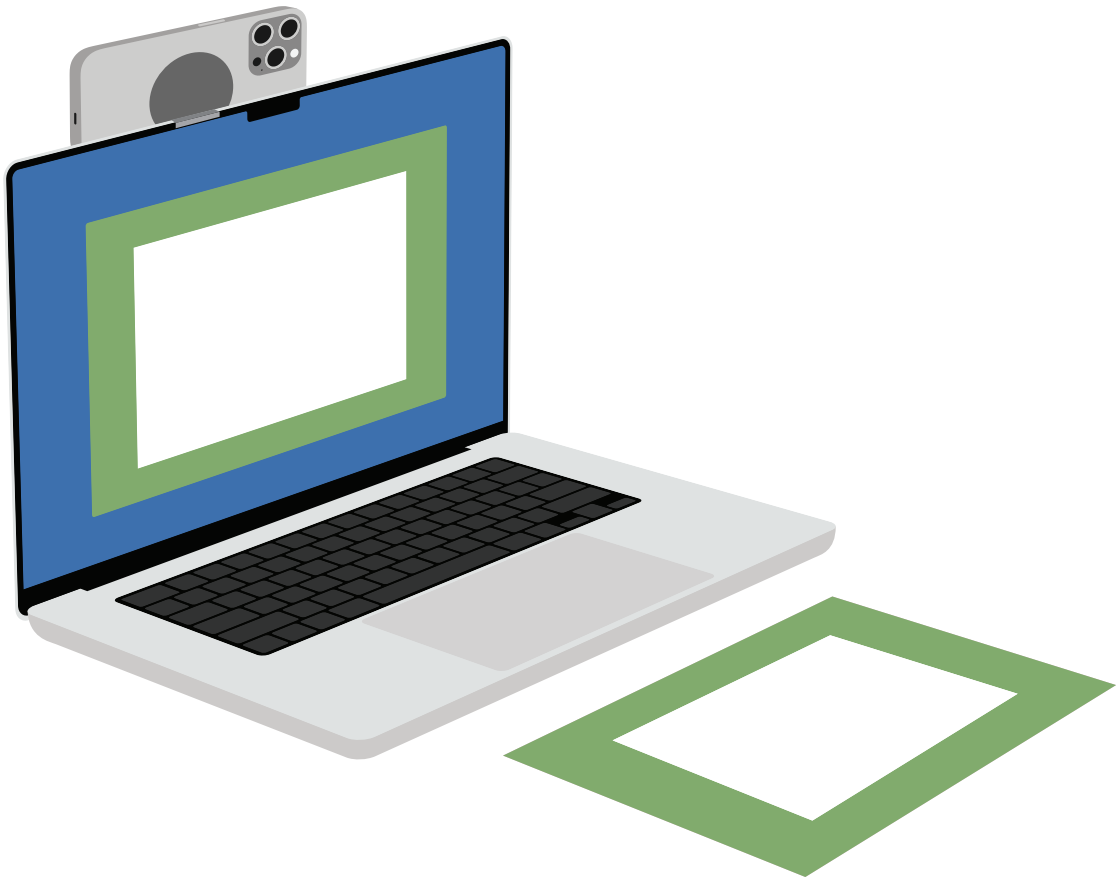

2023-10-10 | Copyright © 2023 Apple Inc. All Rights Reserved.

Center Stage and Desk View are supported on the following devices:

- iPhone 15 Pro Max
- iPhone 15 Pro
- iPhone 15 Plus
- iPhone 15
- iPhone 14 Pro Max
- iPhone 14 Pro
- iPhone 14 Plus
- iPhone 14
- iPhone 13 Pro Max
- iPhone 13 Pro
- iPhone 13
- iPhone 13 mini
- iPhone 12 Pro Max
- iPhone 12 Pro
- iPhone 12
- iPhone 12 mini
- iPhone 11 Pro Max
- iPhone 11 Pro
- iPhone 11

Studio Light is supported on iPhone 12 or later, including iPhone SE (3rd generation).

Device as a webcam and Portrait mode are supported on iPhone XR or later.

20.1 Product Design [中文]

Continuity Camera Mounts:

- Shall support devices in portrait and landscape orientations.
- Shall enable use of a USB-C cable or Lightning to USB charge/sync cable.
- Shall not touch the device cover glass, block any device camera field of view, or obstruct any ambient light sensors, see Device Dimensional Drawings (page 253).
- Shall not cause Scratches and Damage (page 25).
- Should prevent free rotation of the device.
- Should enable a device camera lens height of at least 228 mm to support Desk View.
- Should not obstruct Access to Controls (page 32).
- Should implement the MagSafe Accessory Magnet Array (page 156).
- Should support Tripod Connections (page 30).

Additional requirements apply to Continuity Camera Mounts used in the following scenerios:

2023-10-10 | Copyright © 2023 Apple Inc. All Rights Reserved.

- Apple TV Mount (page 112)
- MacBook Mount (page 113)
- iMac or Display Mount (page 114)

20.2 Apple TV Mount

[中文]

Figure 20-2 Apple TV mount example

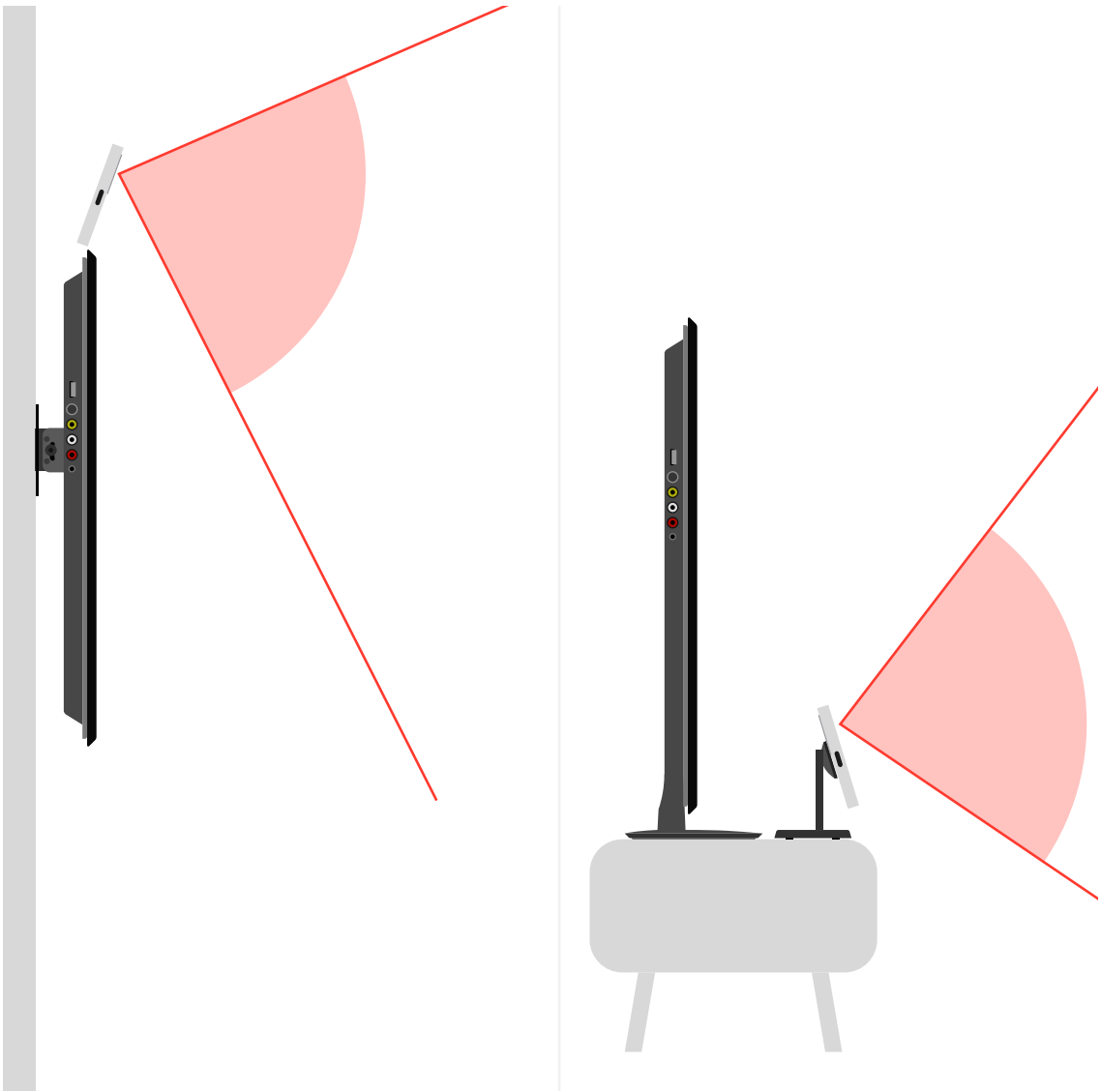

A Continuity Camera Mount designed for Apple TV:

2023-10-10 | Copyright © 2023 Apple Inc. All Rights Reserved.

- Shall be stable when placed on top, or in front of a TV.
- Shall not touch the display glass (active and non-active areas).
- Shall not sandwich or squeeze the TV and device together.
- Should enable upward and downward tilt.

20.3 MacBook Mount

[中文]

Figure 20-3 MacBook mount example

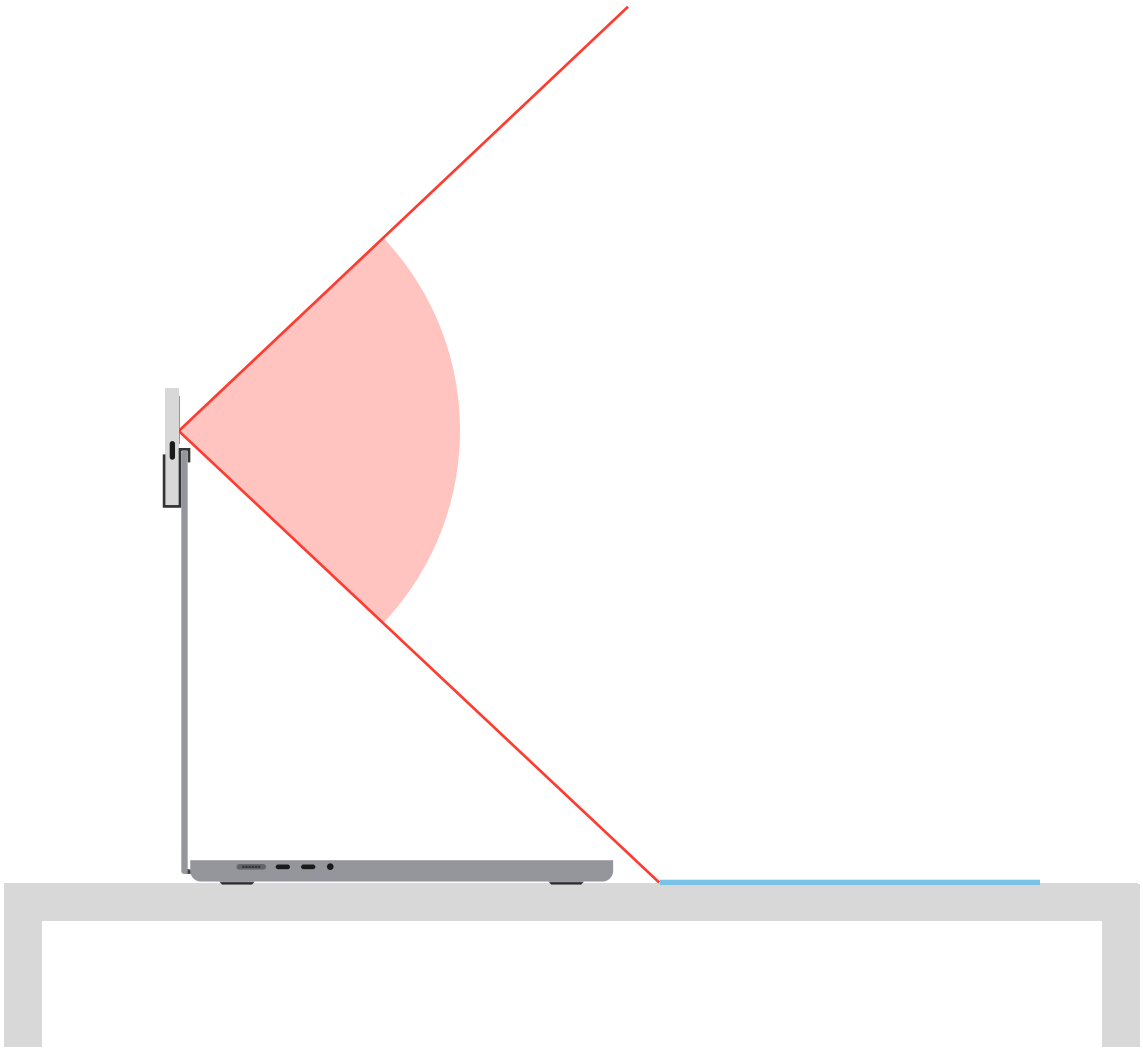

A Continuity Camera Mount designed for MacBook, MacBook Air, and MacBook Pro:

- Shall not scratch or damage the MacBook.

2023-10-10 | Copyright © 2023 Apple Inc. All Rights Reserved.

- Shall not touch the MacBook display glass (active and non-active areas).
- Shall not interfere with or prevent fully closing the MacBook.
- Shall not sandwich or squeeze the MacBook and device together.
- Should not cover or touch any portion of the MacBook display glass, camera, or other sensors.
- Should enable a downward tilt in portrait orientation from 0° to 12° to support Desk View.
- Should minimize the mass to maintain stability of the display.

20.4 iMac or Display Mount

[中文]

Figure 20-4 Display mount example

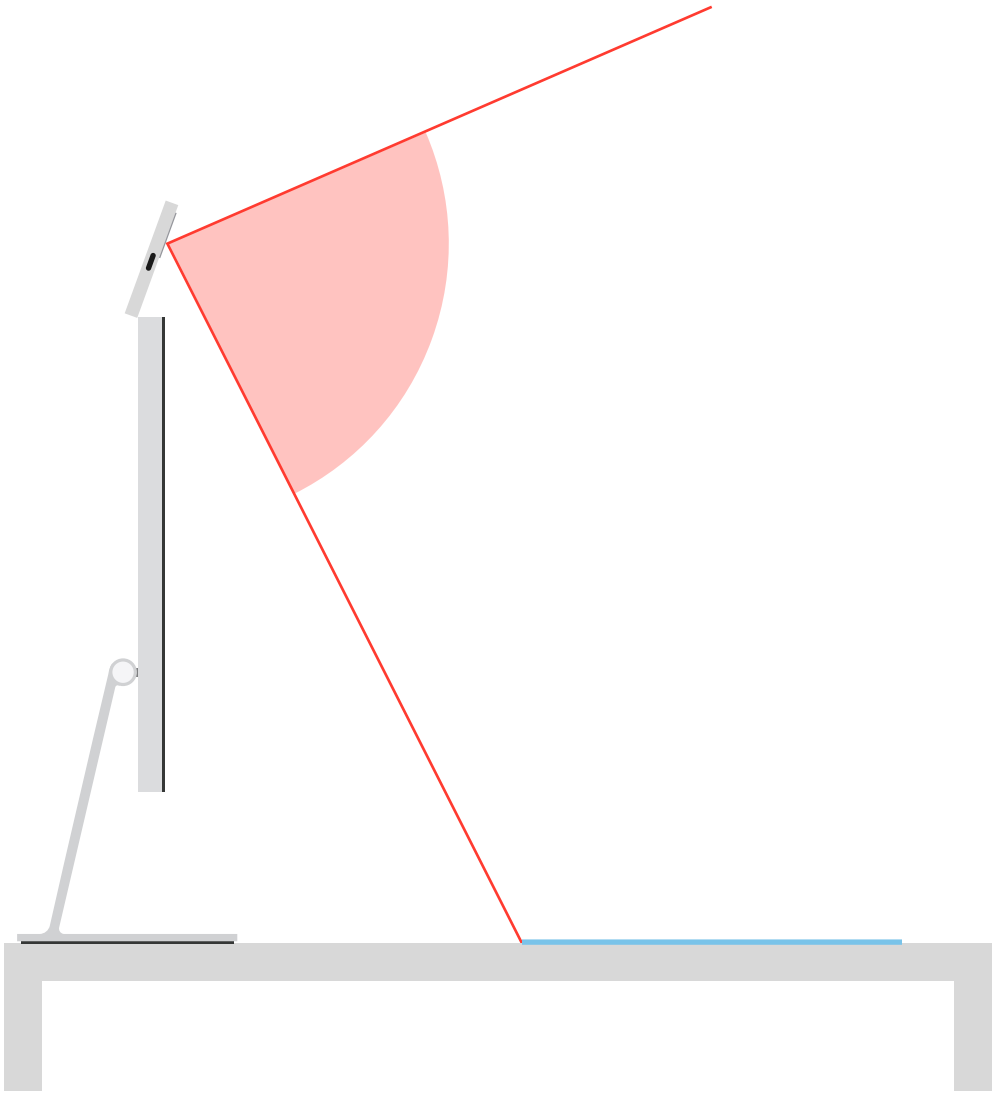

2023-10-10 | Copyright © 2023 Apple Inc. All Rights Reserved.

A Continuity Camera Mount designed for iMac or displays:

- Shall not scratch or damage the iMac or display.
- Shall not touch the display glass (active and non-active areas).
- Shall not sandwich or squeeze the iMac or display and device together.
- Should not cover or touch any portion of the display glass, camera, microphones, or other sensors.
- Should enable a downward tilt from 0° to 30° to support Desk View.

20.5 Test Procedures [中文]

20.5.1 Equipment [中文]

The following equipment is necessary to perform the tests in this procedure:

- Supported devices running iOS 16.0 or later.
- If the mount is designed for Apple TV:
  - An Apple TV 4K (2nd generation) or later running tvOS 17.0 or later, connected to a TV.
- If the mount is designed for Mac:
  - A Mac computer running macOS 13.0 Ventura or later.
  - A MacBook, MacBook Air, and MacBook Pro if the mount is designed for MacBook.
  - An iMac if the mount is designed for iMac.
  - A variety of displays if the mount is designed for external displays.
  - A USB-C cable.
  - A Lightning to USB charge/sync cable.
- An Apple ID with two-factor authentication enabled and used on devices, Apple TV, and all Mac computers.
- A tripod, if the mount is designed for tripod connections.

20.5.2 Enable Continuity Camera on Apple TV [中文]

To configure an Apple TV and a device to enable Continuity Camera:

1. Open FaceTime on the Apple TV.
2. Select the user matching the device Apple ID.
3. Using the device, select the Continuity Camera notification and select Accept.
4. Attach device to Continuity Camera Mount.
5. The Continuity Camera view will display in FaceTime.

20.5.3 Enable Continuity Camera on Mac [中文]

To configure a Mac and a device to enable Continuity Camera:

1. Connect the device to the Mac using a cable.

2023-10-10 | Copyright © 2023 Apple Inc. All Rights Reserved.

2. If the Mac is not a trusted computer, select *Trust* on the 'Trust This Computer' alert on the device.
3. To use Continuity Camera wirelessly, disconnect the cable.
4. Attach device to Continuity Camera Mount.
5. Open FaceTime on the Mac.
6. If the 'Use your iPhone as a Camera for your Mac' alert appears, select Continue.
7. Select the Continuity Camera option from the Video menu.
8. The Continuity Camera view will display in FaceTime.

To reconnect after the Mac and/or device are in sleep mode:

1. Wake the device and the Mac.
2. Connect the device to the Mac using a cable for a wired connection or disconnect the cable for a wireless connection.
3. Attach device to Continuity Camera Mount.
4. Open FaceTime on the Mac and select Continuity Camera from the Video menu.
5. The Continuity Camera view will display in FaceTime.

20.5.4 Product Design [中文]

Verify the Continuity Camera Mount:

1. Supports portrait and landscape orientations.
2. Does not touch the device cover glass or block any device camera field of view.
3. Does not scratch or damage the device.
4. When designed for tripods, complies with ISO 1222:2010.

If the mount is designed for Apple TV, verify the mount:

1. Is stable when placed on top, or in front of a TV.
2. Does not touch the display glass.
3. Does not sandwich or squeeze the TV and device together.

If the mount is designed for MacBook, iMac, or displays, verify the mount:

1. Does not touch the display glass.
2. Does not block any MacBook, iMac, or display camera field of view.
3. Does not sandwich or squeeze the device, MacBook, iMac, or display together.
4. Does not scratch or damage the device, MacBook, iMac, or display.
5. Enables use of USB-C cables or Lightning to USB charge/sync cables.

20.5.5 Center Stage [中文]

Center Stage is a video effect available in the Mac Control Center. Selecting Video Effects and enabling Center Stage will cause the video to follow people as they move within the Continuity Camera field of view. The video will zoom (in and out) and pan (left to right, right to left, up and down), to keep people in the frame.

2023-10-10 | Copyright © 2023 Apple Inc. All Rights Reserved.

1. Ensure the device is logged into the same Apple ID account used on the Mac.
2. Place the device in the mount and on the MacBook, iMac, display, tripod or free-standing support.
3. Perform mount testing using the Photo Booth app with and without Center Stage enabled.
   a. Open the Photo Booth app on the Mac, use the Camera menu to select Continuity Camera.
   b. Use the still photo mode.
4. Use the Mac Control Center menu to select Video Effects, and enable Center Stage.
5. Capture photos from different positions using Center Stage face tracking, in portrait and landscape orientation, waiting 5 seconds between each photo.
6. Use the Mac Control Center menu to select Video Effects, and disable Center Stage.
7. Capture photos in portrait and landscape orientation, waiting 5 seconds between each photo.
8. Using the Photo Booth film strip feature, verify all photos taken during the test:
   a. Are saved to the computer.
   b. Are clearly displayed when viewed.
   c. Have no visible anomalies caused by the mount in either portrait and landscape orientation.

20.5.6 Desk View [中文]

Desk View is a video effect available in the Mac Control Center. Selecting Video Effects and enabling Desk View causes a confirmation dialog box to appear, then a separate Desk View window opens. The tilt angle of the Continuity Camera Mount and its mount position determines the Desk View field of view. Adjust the tilt angle as necessary to display the desktop subject matter. Remote viewers will see the subject matter from the presenters perspective. Closing the Desk View window disables Desk View.

1. Ensure the device is logged into the same Apple ID account used on the Mac.
2. Place the device in the mount and on the MacBook, iMac, display, tripod or free-standing support.
3. Perform mount testing using the FaceTime app with the Desk View video effect enabled.
   a. Open the FaceTime app on the Mac, and use the Video menu to select the Continuity Camera.
   b. Use the Mac Control Center menu to select Video Effects, and enable Desk View.
   c. Verify the Desk View window is displayed.
4. In both landscape and portrait orientation:
   a. Adjust the tilt angle of the Continuity Camera Mount to display the desktop subject matter in the Desk View window.
   b. Verify the desktop subject matter is visible in the Desk View window, and clearly displayed.
   c. Verify there are no visible anomalies caused by the mount in the Desk View window.
   d. Verify the user's face is still visible in FaceTime while Desk View is showing the desktop subject matter.

2023-10-10 | Copyright © 2023 Apple Inc. All Rights Reserved.

Features

21. Bluetooth Accessory Identification [中文]

This chapter describes Apple-specific Bluetooth commands extending accessory capabilities beyond those supported by standard Bluetooth profiles.

To enable Apple-specific features, the accessory shall support HFP Command AT+XAPL (page 119), which provides accurate information about the accessory's supported features. The device will use the information sent by this command to enable and disable custom commands.

The accessory shall send the following AT+XAPL command after making a successful HFP Service Level Connection (SLC) to the device. The accessory should send an AT+XAPL command first, before sending any additional Apple-specific commands. See Siri (page 173) and Bluetooth Headset Battery Level Indication (page 130).

21.1 HFP Command AT+XAPL [中文]

Description: Enables custom AT commands from an accessory.

Initiator: Bluetooth accessory

Format: AT+XAPL=*vendorID*-*productID*-*version*,*features*

Parameters:

- *vendorID*: A string representation of the hex value of the vendor ID from the manufacturer, without the `0x` prefix.
- *productID*: A string representation of the hex value of the product ID from the manufacturer, without the `0x` prefix.
- *version*: The software version.
- *features*: A base-10 representation of a bit field. Available features are:
  - Bit 0 = reserved
  - Bit 1 = The accessory supports battery reporting (reserved only for battery operated accessories).
  - Bit 2 = The accessory is docked or powered (reserved only for battery operated accessories).
  - Bit 3 = The accessory supports Siri status reporting.
  - Bit 4 = the accessory supports noise reduction (NR) status reporting.
  - All other values are reserved.

Example: AT+XAPL=ABCD-1234-0100,10 (Supports battery reporting and Siri status)

2023-10-10 | Copyright © 2023 Apple Inc. All Rights Reserved.

Response: +XAPL=iPhone,*features*

2023-10-10 | Copyright © 2023 Apple Inc. All Rights Reserved.

22. Accessory Power (USB-C)

[中文]

This chapter applies to devices that integrate a USB-C connector.

Accessory power enables accessories to draw a limited amount of power from a device, thereby avoiding the need to integrate a battery or connect to an external power source. This eliminates the need for users to monitor and charge the accessory and enables the accessory to function as long as the device has power. Accessories designed to temporarily connect to the device are good candidates for using accessory power.

Accessories drawing power from the device shall comply with:

- *USB Type-C Cable and Connector Specification, Release 2.2*.
- *USB Power Delivery Specification, Revision 3.1, Version 1.3*, if the accessory supports USB Power Delivery (page 196).

Accessories benefitting from accessory power include:

- Headsets.
- Adapters (page 72).
- Keyboards (page 82).
- External Storage (page 97).

22.1 Available Current

[中文]

The following table lists the current available to an accessory.

Table 22-1 Available Current

Device	Default	USB Type-C Current (page 197)	USB Power Delivery (page 196)
iPhone 15 Pro Max	900 mA	900 mA	900 mA (4.5 W)
iPhone 15 Pro	900 mA	900 mA	900 mA (4.5 W)
iPhone 15 Plus	500 mA	500 mA	900 mA (4.5 W)
iPhone 15	500 mA	500 mA	900 mA (4.5 W)
iPad Pro 12.9-inch (6th generation)	900 mA	3.0 A	3.0 A (15 W)
iPad Pro 12.9-inch (5th generation)	900 mA	3.0 A	3.0 A (15 W)

2023-10-10 | Copyright © 2023 Apple Inc. All Rights Reserved.

Device	Default	USB Type-C Current (page 197)	USB Power Delivery (page 196)
iPad Pro 12.9-inch (4th generation)	900 mA	1.5 A	1.5 A (7.5 W)
iPad Pro 12.9-inch (3rd generation)	900 mA	1.5 A	1.5 A (7.5 W)
iPad Pro 11-inch (4th generation)	900 mA	3.0 A	3.0 A (15 W)
iPad Pro 11-inch (3rd generation)	900 mA	3.0 A	3.0 A (15 W)
iPad Pro 11-inch (2nd generation)	900 mA	1.5 A	1.5 A (7.5 W)
iPad Pro 11-inch (1st generation)	900 mA	1.5 A	1.5 A (7.5 W)
iPad Air (5th generation)	900 mA	1.5 A	1.5 A (7.5 W)
iPad Air (4th generation)	900 mA	1.5 A	1.5 A (7.5 W)
iPad mini (6th generation)	900 mA	1.5 A	1.5 A (7.5 W)
iPad (10th generation)	500 mA	1.5 A	1.5 A (7.5 W)

22.2 Fast Role Swap (FRS) [中文]

iPads with a USB-C connector support the Fast Role Swap (FRS) feature defined in the *USB Power Delivery Specification, Revision 3.1, Version 1.3*.

22.3 Test Procedures [中文]

22.3.1 Maximum Accessory Power [中文]

This test procedure applies to accessories drawing power from the device. The accessory needs to be exercised to its full capability.

The example accessory in this test procedure is an external USB 3 drive that claims to draw up to 900 mA from the USB 3 host. The accessory is exercised by reading and writing a large file. Adapt this procedure as needed for different accessory types.

22.3.1.1 Equipment [中文]

The following equipment is necessary:

- An external USB drive in APFS format (the example accessory).
- A Mac with USB-C.
- A USB-IF certified USB-C to USB-C Full-Featured cable.
- An oscilloscope with a current probe.
- A USB-C breakout board, if necessary.

2023-10-10 | Copyright © 2023 Apple Inc. All Rights Reserved.

22.3.1.2 Setup [中文]

1. Using the current probe attach the oscilloscope to the current loop circuit of the accessory, or the USB-C breakout board.
2. Verify the oscilloscope configuration settings match the following:
   a. Acquisition: >5 M samples/s.
   b. Current Channel: 200 mA/div.
   c. Horizontal Channel: 100 µs/div.
   d. Voltage Channel: 1 V/div, bandwidth limited.
   e. Infinite persistence (reset before each test case).
   f. Adjust offset down, to be able see 7 divisions.
   g. Adjust offset towards the left, to maximize the window.
   h. Trigger: Current Channel, Positive Threshold, 900 mA, Normal Mode.
3. Connect the Mac to the external USB drive using the USB-C cable.
4. Launch Terminal on the Mac, and enter the following command:
   - `dd if=/dev/random of=~/Desktop/testfile.dat count=1024 bs=78643200`
5. The new file `~/Desktop/testfile.dat` is the file to use for testing.

22.3.1.3 Test Cases [中文]

22.3.1.3.1 Enumeration [中文]

1. Verify the external USB drive fully enumerates in the Mac System Report:
   a. Select Apple Menu > 'About this Mac'.
   b. Select 'More Info...'.
   c. Select 'System Report...'.
   d. Select USB from the sidebar.
2. Verify the accessory is displayed in the USB Device Tree.
3. Verify the speed displayed is one of the following:
   a. Up to 5 Gb/s.
   b. Up to 10 Gb/s.

22.3.1.3.2 Idle [中文]

1. Record the maximum current while idle.
2. Verify the maximum current does not exceed 900 mA.

22.3.1.3.3 Write to USB Drive [中文]

1. Use Finder to copy the `testfile.dat` from the Mac to the USB drive.
2. Record the maximum current.
3. Verify the maximum current does not exceed 900 mA.

2023-10-10 | Copyright © 2023 Apple Inc. All Rights Reserved.

22.3.1.3.4 Read from USB Drive [中文]

1. Use Finder to copy the `testfile.dat` from the USB drive to the Mac.
2. Record the maximum current.
3. Verify the maximum current does not exceed 900 mA.

2023-10-10 | Copyright © 2023 Apple Inc. All Rights Reserved.

23. Accessory Power (Lightning)

[中文]

Accessory power enables accessories to draw a limited amount of power from a device, thereby avoiding the need to integrate a battery or connect to an external power source. This eliminates the need for users to monitor and charge the accessory and enables the accessory to function as long as the device has power. Accessories designed to temporarily connect to the device are good candidates for using accessory power.

See the Accessory Interface Specification (page 23) for more information.

2023-10-10 | Copyright © 2023 Apple Inc. All Rights Reserved.

24. App Discovery

[中文]

The App Discovery feature enables accessories to retrieve a list of installed apps on the device capable of communicating with the accessory. See App Launch (page 127) to make use of the list.

See the Accessory Interface Specification (page 23) for more information.

2023-10-10 | Copyright © 2023 Apple Inc. All Rights Reserved.

25. App Launch

[中文]

Accessories supporting the App Launch feature can request a device launch an app on its behalf.

Figure 25-1 App Launch Alert

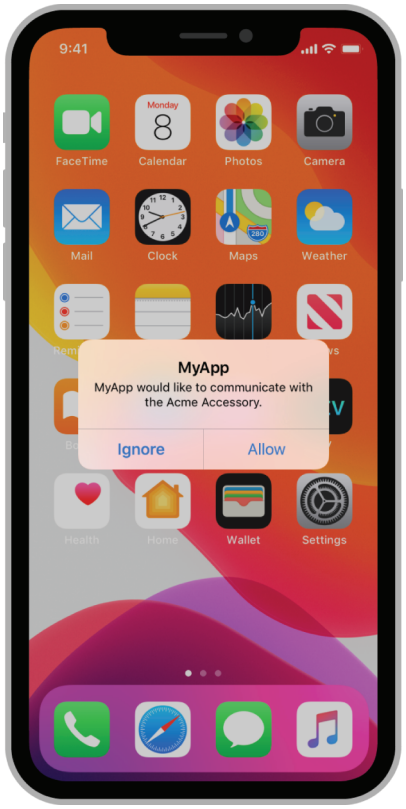

See the Accessory Interface Specification (page 23) for more information.

2023-10-10 | Copyright © 2023 Apple Inc. All Rights Reserved.

26. App Match

[中文]

The App Match feature enables accessories supporting the External Accessory Protocol feature to match with compatible apps on the App Store.

When connected for the first time, the device asks the user if they would like to visit the App Store and view compatible apps. Subsequently, this action may be repeated by the user using *Settings > General > About > 'Accessory Name' > 'Find App for this Accessory'*.

Matched apps are listed in alphabetical order with one exception. If the accessory works with apps from multiple development teams/companies, the accessory may provide a preferred Team ID to place apps from the preferred team at the top of the list.

Figure 26-1 App Match Alert

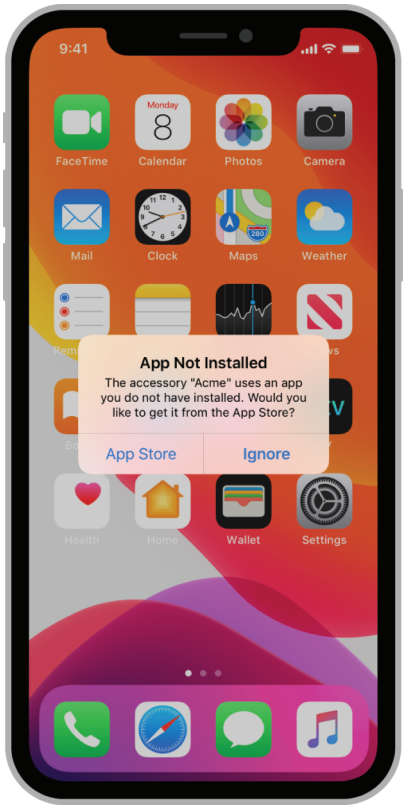

2023-10-10 | Copyright © 2023 Apple Inc. All Rights Reserved.

See the Accessory Interface Specification (page 23) for more information.

2023-10-10 | Copyright © 2023 Apple Inc. All Rights Reserved.

27. Bluetooth Headset Battery Level Indication

[中文]

Any Hands-Free Bluetooth headset accessory may display its battery level to the user as an indicator icon in the device status bar. This feature is supported on all devices supporting the Hands-Free Profile, including iPhone, iPod touch, and iPad.

Headset battery indication is implemented by two Apple-specific Bluetooth HFP AT commands, HFP Command AT+XAPL (page 119) and HFP Command AT+IPHONEACCEV (page 130)

27.1 HFP Command AT+IPHONEACCEV

[中文]

Description: Reports a headset state change.

Initiator: Headset accessory

Format: `AT+IPHONEACCEV=`*Number of key/value pairs*`,`*key1*`,`*val1*`,`*key2*`,`*val2*`,...`

Parameters:

- *Number of key/value pairs*: The number of parameters coming next.
- *key*: the type of change being reported:
  - 1 = Battery Level
  - 2 = Dock State
- *val*: the value of the change:
  - Battery Level: string value between '0' and '9'
  - Dock State: 0 = undocked, 1 = docked

Example: `AT+IPHONEACCEV=1,1,3`

2023-10-10 | Copyright © 2023 Apple Inc. All Rights Reserved.

28. Device Power (USB-C)

[中文]

Accessories may provide power to devices using USB-C.

Apple recommends providing power to the device whenever possible for the best user experience.

Accessories providing power to a device shall:

- Connect to the device either through an integrated USB-C Plug (page 240) or a USB-C cable.
- Use USB Type-C Current (page 197) to identify their power capability and should use USB Power Delivery (page 196) to provide higher power, see https://support.apple.com/en-us/HT208137.
- Provide power at all times unless a direct user action is taken turning the accessory 'off'. Failure to provide power at all times may result in the accessory being unable to charge a device whose battery level is too low to boot.

Accessories may use the iAP2 (page 202) protocol in conjunction with USB Type-C Current (page 197) to allow for more granular control of the available current after the initial connection. Accessories shall not use iAP2 (page 202) to adjust available current in conjunction with USB Power Delivery (page 196).

Accessories providing power from a USB-C receptacle, see Providing Power (page 245).

28.1 External Power Source

[中文]

Accessories drawing power from external power sources and providing all or a portion of their power to the device shall:

- Identify the power source's capability and report accordingly to the device.
- Not manipulate a device into drawing more power from the external power source than the device would normally draw when directly connected to the external power source.
- Derate the available power by the amount of power consumed by the accessory, if applicable.

Accessories drawing power from external power sources may inform the device when power is not available or only available at a reduced level (for example, from an internal battery) or when the user unplugs the accessory from the external power source (for example, an AC power adapter or AC "mains" power outlet). Power to the device shall be restored and the updated power providing capability change shall be communicated to the device when the user re-connects the external power source.

2023-10-10 | Copyright © 2023 Apple Inc. All Rights Reserved.

See AC Power Adapters (page 74), Integrated USB Receptacles (page 25), and User Supplied Cables and AC Power Adapters (page 25) for additional requirements specific to external USB power supplies/cables.

28.2 Power State Changes [中文]

Accessories shall not change the amount of power provided to a device unless:

- Direct user action is taken to turn the accessory on or off.
- An external power source (for example, mains electricity or battery) is connected to or disconnected from the accessory.
- The accessory's internal power source (for example, a battery) is depleted or loaded to the point where it is no longer capable of supplying its declared power providing capability or is now capable of supplying more power than previously declared.

2023-10-10 | Copyright © 2023 Apple Inc. All Rights Reserved.

29. Device Power (Lightning)

[中文]

Accessories may provide power to devices using Lightning.

Apple recommends providing power to the device whenever possible for the best user experience.

Accessories providing power to a device shall connect to the device either through an integrated Lightning connector or a USB to Lightning cable. To incorporate an integrated Lightning connector, the accessory developer shall be a member of the Apple MFi Licensing Program (page 23).

Accessories providing power to a device shall either:

- Provide direct power, see Direct Power Source (page 133).
- Manage power from external sources, see External Power Source (page 133).

Accessories without the potential for data communication with the device shall provide direct power to the device, see Direct Power Source (page 133).

29.1 Direct Power Source

[中文]

Accessories providing power directly shall provide power at all times unless a direct user action is taken turning the accessory 'off'. Failure to provide power at all times may result in the accessory being unable to charge a device whose battery level is too low to boot.

All accessory power source testing shall be performed with programmable loads, not devices. Device power draw varies with environmental factors.

29.2 External Power Source

[中文]

Accessories drawing power from external power sources and providing all or a portion of their power to the device:

- Shall identify the power source's capability and report accordingly to the device.
- Shall not manipulate a device into drawing more power from the external power source than the device would normally draw when directly connected to the external power source.
- Shall not manipulate a device into drawing less than the minimum power required by the accessory compatibility claims if it is available from the external source, see Providing Power using USB Connectors (page 134).

2023-10-10 | Copyright © 2023 Apple Inc. All Rights Reserved.

Accessories drawing power from external power sources may inform the device when power is not available or only available at a reduced level (for example, from an internal battery) or when the user unplugs the accessory from the external power source (for example, an AC power adapter or AC "mains" power outlet). Power to the device shall be restored and the updated power providing capability change shall be communicated to the device when the user re-connects the external power source.

See AC Power Adapters (page 74), Integrated USB Receptacles (page 25), and User Supplied Cables and AC Power Adapters (page 25) for additional requirements specific to external USB power supplies/cables.

29.3 Declaring Capability [中文]

If the accessory provides power using a:

- USB-A receptacle, it shall use one of the following to declare its power providing capability:
  - USB Power Capability Vendor Request (page 192).
  - USB D+/D- Resistor Networks (page 193).
- USB-C receptacle, then:
  - It shall use one of the following to declare its power providing capability:
    - USB Type-C Current (page 197).
    - USB Power Delivery (page 196).
  - If the accessory does not have the potential for data communication with the device, it shall also support the *USB Battery Charging Specification, Release 1.2*.

29.4 Providing Power using USB Connectors [中文]

Accessories providing power from:

- A USB-C receptacle, see USB-C Receptacle (page 244).
- A USB-A receptacle, see USB-A Receptacle (page 239).

29.5 Labeling Multiple Connectors [中文]

If the accessory has multiple connectors with different device compatibilities, iPad-compatible connectors shall be labeled with the text 'iPad' unless it is physically impossible to connect an iPad to iPhone/iPod compatible connectors.

2023-10-10 | Copyright © 2023 Apple Inc. All Rights Reserved.

29.6 Fast Charge for iPhone (20 W) [中文]

Accessories advertising "fast charge" for iPhone (https://support.apple.com/en-us/HT208137) shall:

- Support USB Power Delivery (page 196).
- Supply at least 20 W (2.22 A at 9 V) using USB PD.
- Claim compatibility with at least one of the following iPhone models:
  - iPhone 14 Pro Max
  - iPhone 14 Pro
  - iPhone 14 Plus
  - iPhone 14
  - iPhone SE (3rd generation)
  - iPhone 13 Pro Max
  - iPhone 13 Pro
  - iPhone 13
  - iPhone 13 mini
  - iPhone 12 Pro Max
  - iPhone 12 Pro
  - iPhone 12
  - iPhone 12 mini
  - iPhone SE (2nd generation)
  - iPhone 11 Pro Max
  - iPhone 11 Pro
  - iPhone 11
  - iPhone XS Max
  - iPhone XS
  - iPhone XR
  - iPhone X
  - iPhone 8 Plus
  - iPhone 8

Accessories such as charging cables should be capable of supporting up to 60 W (3 A at 20 V) to provide compatibility with a variety of sources and devices.

2023-10-10 | Copyright © 2023 Apple Inc. All Rights Reserved.

29.7 Overcurrent and Short Circuit Protection [中文]

Figure 29-1 Overcurrent and Short Circuit Protection

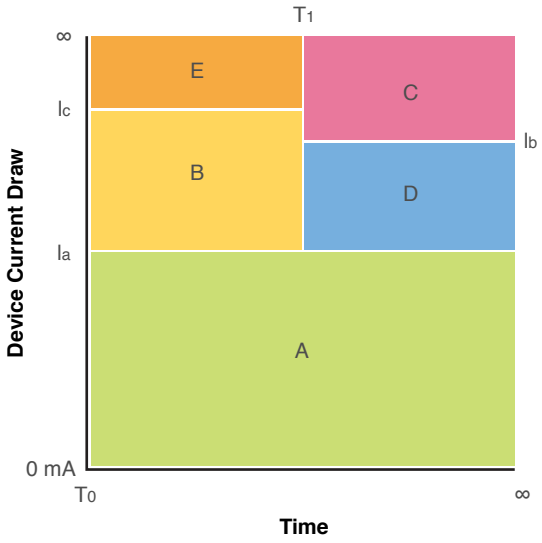

Power-providing accessories shall implement overcurrent and short circuit protection for each region in Figure 29-1 (page 136) according to Table 29-1 (page 136), Table 29-2 (page 136), and Table 29-3 (page 137).

Table 29-1 Overcurrent/Short Circuit Protection Current Thresholds

Threshold	Definition
I_a	Nominal accessory output current (for example, 1000 mA, 2100 mA, 2400 mA, 3000 mA).
I_b	I_a + 60%.
I_c	Lowest device current draw causing accessory output voltage (measured at Lightning Device Power) to drop below 2 V.

Table 29-2 Overcurrent/Short Circuit Protection Time Thresholds

Threshold	Definition
T_0	Start of any device current draw transient.
T_1	Accessory overcurrent/short circuit deglitch/debounce time, shall ≥ T_0 + 1 ms.

2023-10-10 | Copyright © 2023 Apple Inc. All Rights Reserved.

Table 29-3 Overcurrent/Short Circuit Protection Behaviors

Region	Name	Accessory Behavior
A	Normal Operation	Accessory shall not limit or shutdown output current.
B	Overcurrent Transient	Accessory shall not shutdown output current. Accessory may limit output current to I_a or higher.
C	Overcurrent	Accessory shall shutdown output current.
D	Potential Overcurrent	Accessory may shutdown output current.
E	Potential Short Circuit	If Lightning Device Power voltage drops below 2 V, the accessory may trigger short circuit protection. Accessories shall not trigger short circuit protection on device current draw.

29.8 Overcurrent and Short Circuit Protection Resets [中文]

Accessory overcurrent and short circuit protection shall reset without mechanical intervention.

29.9 Power State Changes [中文]

Accessories shall not change the amount of power provided to a device unless:

- Direct user action is taken to turn the accessory on or off.
- An external power source (for example, mains electricity or battery) is connected to or disconnected from the accessory.
- The accessory's internal power source (for example, a battery) is depleted or loaded to the point where it is no longer capable of supplying its declared power providing capability or is now capable of supplying more power than previously declared.

2023-10-10 | Copyright © 2023 Apple Inc. All Rights Reserved.

30. Device Power (Inductive)

[中文]

Accessories may provide power to devices using inductive power transmitters, specifically:

- Qi Wireless Power (page 138)
- MagSafe (page 139)

30.1 Qi Wireless Power

[中文]

The following devices support Qi Wireless Power (page 138):

- iPhone 15 Pro Max
- iPhone 15 Pro
- iPhone 15 Plus
- iPhone 15
- iPhone 14 Pro Max
- iPhone 14 Pro
- iPhone 14 Plus
- iPhone 14
- iPhone SE (3rd generation)
- iPhone 13 Pro Max
- iPhone 13 Pro
- iPhone 13
- iPhone 13 mini
- iPhone 12 Pro Max
- iPhone 12 Pro
- iPhone 12
- iPhone 12 mini
- iPhone SE (2nd generation)
- iPhone 11 Pro Max
- iPhone 11 Pro
- iPhone 11
- iPhone XS Max
- iPhone XS
- iPhone XR
- iPhone X
- iPhone 8 Plus

2023-10-10 | Copyright © 2023 Apple Inc. All Rights Reserved.

- iPhone 8
- MagSafe Charging Case (USB-C) for AirPods Pro (2nd generation)
- MagSafe Charging Case for AirPods Pro (2nd generation)
- MagSafe Charging Case for AirPods (3rd generation)
- Wireless Charging Case for AirPods

Accessories incorporating a Qi transmitter shall use an embedded Qi Certified subsystem or shall be Qi Certified according to *The Qi Wireless Power Transfer System, Power Class 0 Specification*, version 1.2.4, see https://www.wirelesspowerconsortium.com.

30.2 MagSafe [中文]

The following devices support MagSafe:

- iPhone 15 Pro Max
- iPhone 15 Pro
- iPhone 15 Plus
- iPhone 15
- iPhone 14 Pro Max
- iPhone 14 Pro
- iPhone 14 Plus
- iPhone 14
- iPhone 13 Pro Max
- iPhone 13 Pro
- iPhone 13
- iPhone 13 mini
- iPhone 12 Pro Max
- iPhone 12 Pro
- iPhone 12
- iPhone 12 mini
- MagSafe Charging Case (USB-C) for AirPods Pro (2nd generation)
- MagSafe Charging Case for AirPods Pro (2nd generation)
- MagSafe Charging Case for AirPods (3rd generation)

See the Accessory Interface Specification (page 23) for information on MagSafe.

30.3 Electromagnetic Compatibility (EMC) [中文]

Accessories providing inductive device power should be designed for electromagnetic compatibility.

2023-10-10 | Copyright © 2023 Apple Inc. All Rights Reserved.

Apple recommends shielding the magnetic field from the charging coil and maintaining a low impedance shield termination for cables to comply with regulatory EMC requirements for the completed product. Implementation, final compliance testing, report preparation, and labeling are the responsibilities of the company marketing and producing the product.

Cable termination is critical for reduced emissions. Cable termination and connectors should be kept away from the charging coil and cables should be routed away from the charging surface.

If emissions are present, adding clamp-on ferrites/absorbers to the cable can help reduce emissions. Selected ferrite/absorber materials should be rated for the failing frequencies.

Depending on the accessory's supported use cases, testing should be performed with the following power supplies:

- Apple USB-C Power Adapters:
  - Apple 140W USB-C Power Adapter
  - Apple 96W USB-C Power Adapter
  - Apple 70W USB-C Power Adapter
  - Apple 67W USB-C Power Adapter
  - Apple 30W USB-C Power Adapter
  - Apple 20W USB-C Power Adapter
  - Apple 35W Dual USB-C Port Compact Power Adapter
  - Apple 35W Dual USB-C Port Power Adapter
- Apple USB-A Power Adapters:
  - Apple 12W USB Power Adapter
  - Apple 5W USB Power Adapter
    - Model A1385 (US)
    - Model A1400 (Int.)
    - Model A1552 (UK)
    - Model A1443 (China)
    - Model A1444 (Australia)
    - Model A1486 (Brazil)
    - Model A1487 (Korea)
    - Model A1501 (Argentina)
- Apple Mac computers:
  - Apple MacBook Pro
  - Apple MacBook Air

If power sources are used differing from those listed above, emission testing should be performed while the power sources are on.

In addition to the use cases above, charging devices should be tested in idle mode for emissions.

Emissions tests should be conducted in accordance with standards referenced in the following:

2023-10-10 | Copyright © 2023 Apple Inc. All Rights Reserved.

- FCC CFR 47, Part 15
- ICES-003, Issue 5, CAN/CSA-CEI/IEC CISPR 22-10
- CISPR 22: 2008
- EN 55022: 2010
- AS/NZS CISPR 22:2009, TCVN 7189:2009
- VCCI V-3/2013.04
- GB 9254-2008, GB 17625.1-2012, GB 17625.2-2007, CNS 13438-2006
- CISPR 24: 2010
- EN 55024: 2010

Once the highest emitting combination is identified, complete testing should be performed on the configuration. Some regulatory domains may require EMC certification.

2023-10-10 | Copyright © 2023 Apple Inc. All Rights Reserved.

31. External Accessory Protocol

[中文]

The External Accessory (EA) framework provides accessories the means to communicate with one or more apps using EA sessions, providing a read/write bytestream interface. Accessory developers specify a custom protocol between the application and the accessory. The design and maintenance of communication protocols between accessories and applications are entirely the responsibility of the accessory and app developers. External Accessory framework documentation can be found at https://developer.apple.com/documentation/externalaccessory.

See the Accessory Interface Specification (page 23) for more information.

2023-10-10 | Copyright © 2023 Apple Inc. All Rights Reserved.

32. HID Headset Remote

[中文]

Devices may accept user input from headsets to control audio volume and media playback.

32.1 Requirements

[中文]

Accessories implementing HID headset remote controls shall:

- Connect to the device using one of the following:
  - USB-C Plug (page 240).
  - Bluetooth (page 207).

HID headset remotes shall support the Human Interface Device (HID) (page 203) protocol.

The HID report descriptor for a headset remote shall declare support for the HID Consumer and/or Telephony pages and only send usages from Table 32-1 (page 143) and Table 32-2 (page 143).

Table 32-1 HID Consumer Page (0x0C) controls for use by headset remotes

Usage ID	Usage Name	Apple Function
0x00B5	Scan Next Track	Transport Right
0x00B6	Scan Previous Track	Transport Left
0x00B9	Random Play	Shuffle
0x00BC	Repeat	Repeat
0x00E2	Mute	Mute
0x00E9	Volume Increment	Volume Up
0x00EA	Volume Decrement	Volume Down
0x025B	Promote	Play More Like This
0x025C	Demote	Play Less Like This

Table 32-2 HID Telephony Page (0x0B) controls for use by headset remotes

Usage ID	Usage Name	Apple Function
0x0021	Flash	Center

2023-10-10 | Copyright © 2023 Apple Inc. All Rights Reserved.

If a user presses and holds the accessory control surface corresponding to the 'Transport Right' or 'Transport Left' function, devices may scrub forwards or backwards within the current playing media item. Accessories shall not present a separate 'Fast-Forward' or 'Reverse' control surface to the user for the same feature.

32.2 Examples [中文]

32.2.1 Headset Remote Example HID Report Descriptor (Telephony) [中文]

The following sample HID descriptor demonstrates how to implement telephony and volume controls.

```
USAGE_PAGE (Consumer Devices) 05 0C
USAGE (Consumer Control)      09 01
COLLECTION (Application)      A1 01
  LOGICAL_MINIMUM (0)         15 00
  LOGICAL_MAXIMUM (1)         25 01
  REPORT_SIZE (1)             75 01
  REPORT_COUNT (2)            95 02
  USAGE (Volume Increment)    09 E9    // Volume Up
  USAGE (Volume Decrement)    09 EA    // Volume Down
  INPUT (Data,Var,Abs)        81 02
  USAGE_PAGE (Telephony)      05 0B
  REPORT_COUNT (1)            95 01
  USAGE (Flash)               09 21    // Center
  INPUT (Data,Var,Abs)        81 02
  REPORT_SIZE (5)             75 05
  REPORT_COUNT (1)            95 01
  INPUT (Cnst, Var, Abs)      81 03
END_COLLECTION                C0
```

Each report is one byte, and each bit corresponds to one of the functions. For example, the following sample reports communicate the referenced button having been pressed:

- Volume Up is `0x01`
- Volume Down is `0x02`
- Center is `0x04`

32.2.2 Headset Remote Example HID Report Descriptor (Media Playback) [中文]

The following sample HID descriptor demonstrates how to implement media playback controls.

```
USAGE PAGE (Consumer Devices) 05 0C
USAGE (Consumer Control)      09 01
COLLECTION (Application)      A1 01
```

2023-10-10 | Copyright © 2023 Apple Inc. All Rights Reserved.

```
  LOGICAL MINIMUM (0)         15 00
  LOGICAL MAXIMUM (1)         25 01
  REPORT SIZE (1)             75 01
  REPORT COUNT (7)            95 07
  USAGE (Scan Next Track)     09 B5    // Transport Right
  USAGE (Scan Previous Track) 09 B6    // Transport Left
  USAGE (Mute)                09 E2    // Mute
  USAGE (Shuffle)             09 B9    // Shuffle
  USAGE (Repeat)              09 BC    // Repeat
  USAGE (Promote)             0A 5B 02 // Play More Like This
  USAGE (Demote)              0A 5C 02 // Play Less Like This
  INPUT (Data,Var,Abs)        81 02
END COLLECTION                C0
```

Each report is one byte, and each bit corresponds to one of the functions. For example, the following sample reports communicate the referenced button having been pressed:

- Transport Right is `0x01`
- Transport Left is `0x02`
- Mute is `0x04`

32.2.3 Headset Remote Example HID Report Descriptor (Telephony and Media Playback) [中文]

The following sample HID descriptor demonstrates how to implement all possible media playback controls along with the same controls found on the Apple headset remote.

```
USAGE_PAGE (Consumer Devices) 05 0C
USAGE (Consumer Control)      09 01
COLLECTION (Application)      A1 01
  LOGICAL_MINIMUM (0)         15 00
  LOGICAL_MAXIMUM (1)         25 01
  REPORT_SIZE (1)             75 01
  REPORT_COUNT (9)            95 09
  USAGE (Scan Next Track)     09 B5    // Transport Right
  USAGE (Scan Previous Track) 09 B6    // Transport Left
  USAGE (Mute)                09 E2    // Mute
  USAGE (Shuffle)             09 B9    // Shuffle
  USAGE (Repeat)              09 BC    // Repeat
  USAGE (Promote)             0A 5B 02 // Play More Like This
  USAGE (Demote)              0A 5C 02 // Play Less Like This
  USAGE (Volume Increment)    09 E9    // Volume Up
  USAGE (Volume Decrement)    09 EA    // Volume Down
  INPUT (Data,Var,Abs)        81 02
  USAGE_PAGE (Telephony)      05 0B
  REPORT_COUNT (1)            95 01
  USAGE (Flash)               09 21    // Center
  INPUT (Data,Var,Abs)        81 02
  REPORT_SIZE (5)             75 05
  REPORT_COUNT (1)            95 01
```

2023-10-10 | Copyright © 2023 Apple Inc. All Rights Reserved.

```
  INPUT (Cnst, Var, Abs)      81 03
END COLLECTION                C0
```

Each report is two bytes. The bits are assigned top-to-bottom (from 'Transport Right' to 'Center'). For example, the following sample reports communicate the referenced button having been pressed:

- Transport Right is `0x0100`
- Transport Left is `0x0200`
- Mute is `0x0400`
- Volume Up is `0x8000`
- Volume Down is `0x0001`
- Center is `0x0002`

2023-10-10 | Copyright © 2023 Apple Inc. All Rights Reserved.

33. Location Information

[中文]

Location features enable accessories to provide Global Navigation Satellite System (GNSS) and sensor data (for example, speed) to devices in the form of National Marine Electronics Association (NMEA) sentences. Devices can use the additional information to augment built-in location services. For example, some external accessories provide more accurate or more frequent position updates. Additionally, devices can conserve power by using location information from a self-powered external accessory.

See the Accessory Interface Specification (page 23) for more information.

2023-10-10 | Copyright © 2023 Apple Inc. All Rights Reserved.

34. MagSafe Attach

[中文]

The following devices support MagSafe Attach:

- iPhone 15 Pro Max
- iPhone 15 Pro
- iPhone 15 Plus
- iPhone 15
- iPhone 14 Pro Max
- iPhone 14 Pro
- iPhone 14 Plus
- iPhone 14
- iPhone 13 Pro Max
- iPhone 13 Pro
- iPhone 13
- iPhone 13 mini
- iPhone 12 Pro Max
- iPhone 12 Pro
- iPhone 12
- iPhone 12 mini

MagSafe Cases (page 31) shall:

- Claim compatibility with a MagSafe-capable device.
- Integrate a MagSafe Case Magnet Array (page 149).

Other MagSafe accessories shall:

- Claim compatibility with a MagSafe-capable device.
- Integrate a MagSafe Accessory Magnet Array (page 156).

Apple recommends the following magnet array vendors:

- Ningbo Sanhuan Magsound Industry & Trade Co., Ltd. (https://magsound.com)
- Phone In Mag Electronics Co., Ltd. (http://www.phonein.com.tw)
- Quadrant Solutions, Inc. (https://www.quadrant.us)

2023-10-10 | Copyright © 2023 Apple Inc. All Rights Reserved.

34.1 MagSafe Case Magnet Array [中文]

Figure 34-1 MagSafe Case Magnet Array

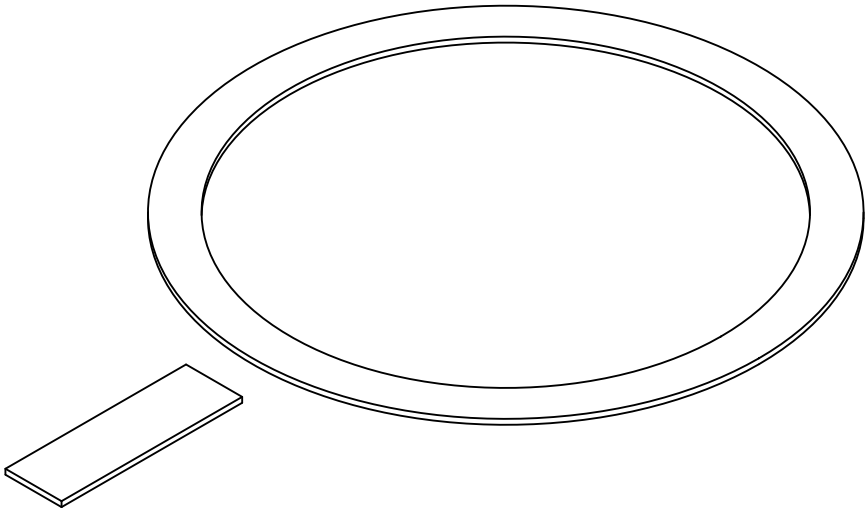

34.1.1 Product Design [中文]

All cases integrating a MagSafe case magnet array shall:

- Enclose the device.
- Have a uniform thickness no greater than 2.1 mm; Apple recommends 2.0 mm.
- Firmly attach to the device without relying on the magnets.
- Not integrate magnets on the back of the case other than the MagSafe magnets.
- Comply with requirements for Cases (page 31).
- Work with:
  - Apple MagSafe Charger.
  - Apple MagSafe Battery Pack.
  - iPhone Leather Wallet with MagSafe.

34.1.2 Mechanical [中文]

All magnets that are part of the MagSafe case magnet array shall be positioned in the same plane.

The case and MagSafe case magnet array shall enable MagSafe accessories to magnetically self align within a 1.55 mm radial maximum.

2023-10-10 | Copyright © 2023 Apple Inc. All Rights Reserved.

34.1.2.1 Magnets [中文]

All MagSafe case magnets shall be N45SH NdFeB with a 7 µm - 13 µm NiCuNi plating finish (or similar) and shall meet the requirements in Table 34-1 (page 150).

Table 34-1 Magnet Properties

Property	Minimum	Maximum
Br	13.2 kGs	13.6 kGs
Hcb	12.75 kOe	
Hcj	20.50 kOe	
BHmax	43 MGOe	46 MGOe

34.1.2.2 Magnet Array [中文]

The magnets shall be positioned in the case following the dimensions and polarity shown in Figure 34-2 (page 151), Figure 34-3 (page 152) and Figure 34-4 (page 152).

2023-10-10 | Copyright © 2023 Apple Inc. All Rights Reserved.

Figure 34-2 MagSafe Magnet Array Dimensions

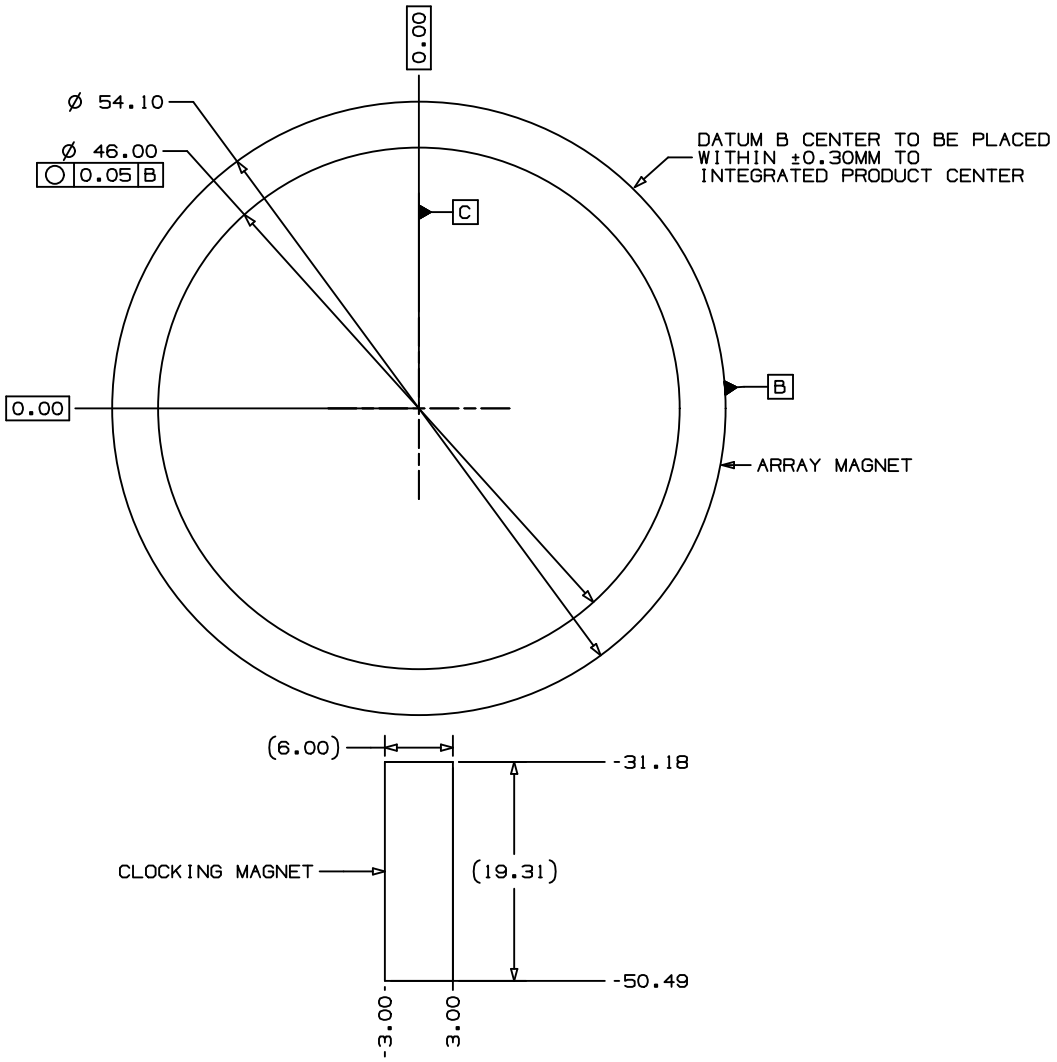

2023-10-10 | Copyright © 2023 Apple Inc. All Rights Reserved.

Figure 34-3 MagSafe Magnet Ring Dimensions and Polarity

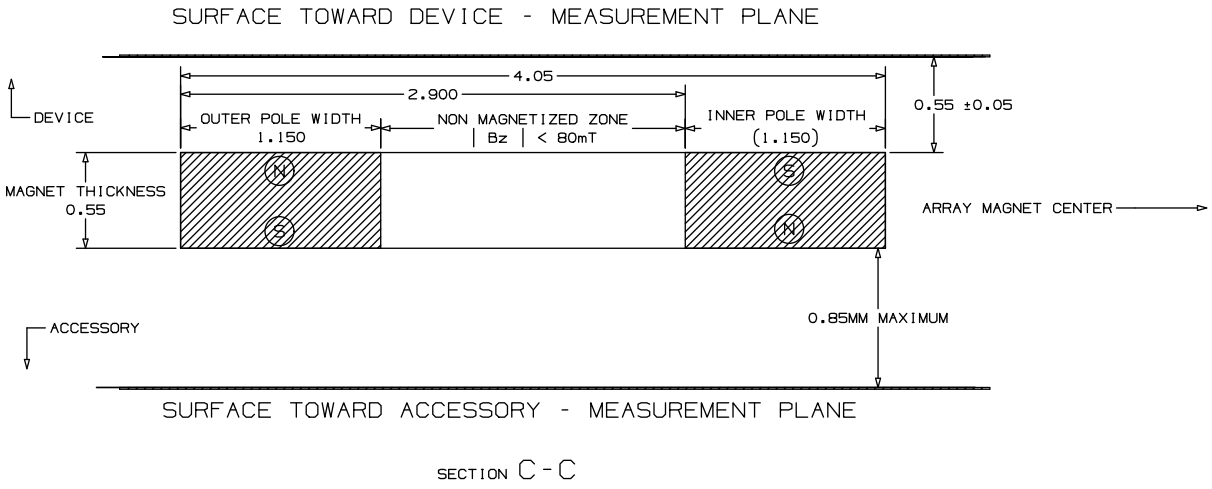

Figure 34-4 MagSafe Orientation Magnet Dimensions and Polarity

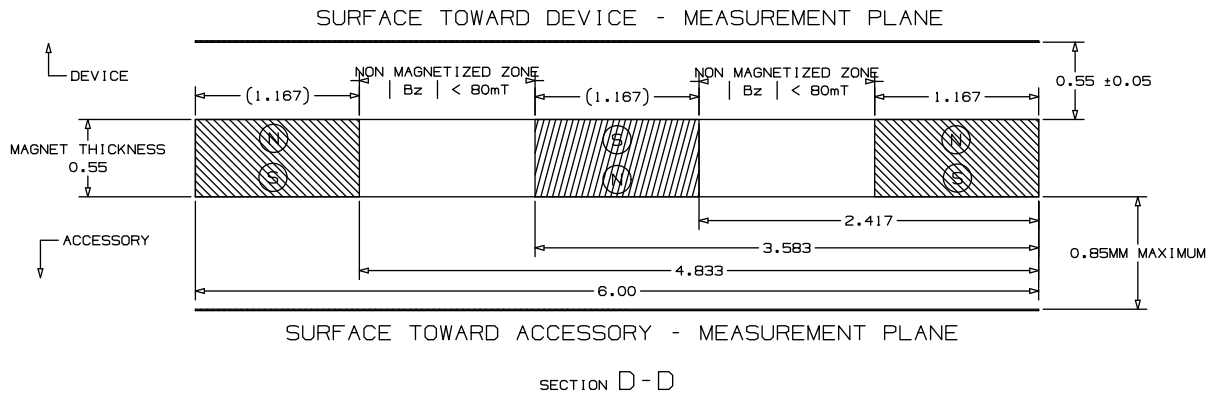

The flux density of a MagSafe case magnet ring shall comply with Table 34-2 (page 153) and Table 34-3 (page 154) across the 8 lines (S1 - S8) in Figure 34-5 (page 153).

2023-10-10 | Copyright © 2023 Apple Inc. All Rights Reserved.

Figure 34-5 MagSafe Flux Density Measurement Plane

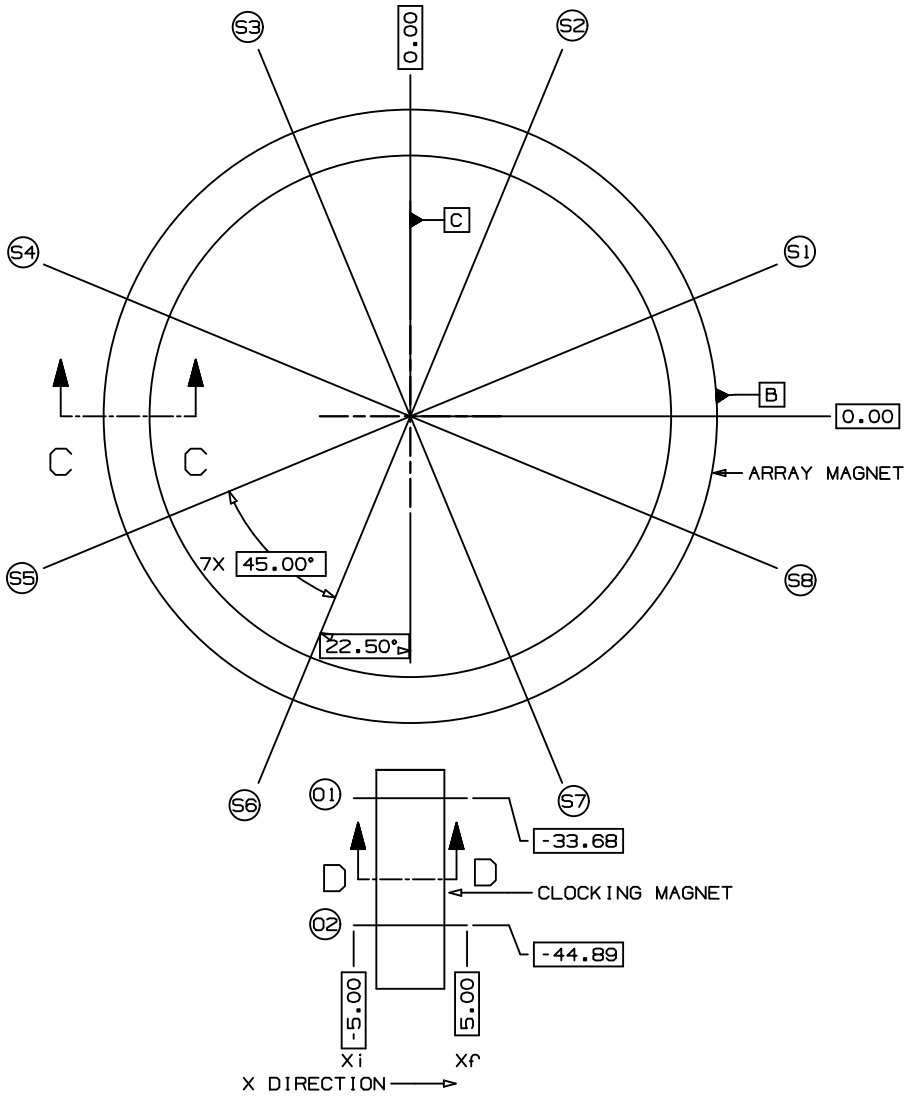

Table 34-2 Device side flux density at 0.55 mm from magnet ring surface

Minimum r	Maximum r	Minimum Bz	Maximum Bz	Minimum Bxy	Maximum Bxy
	19.5 mm	-0.020 T	0.020 T		0.025 T
19.5 mm	23 mm				0.075 T
23 mm	24 mm	-0.170 T	-0.125 T		
24 mm	26 mm			0.095 T	0.1325 T

2023-10-10 | Copyright © 2023 Apple Inc. All Rights Reserved.

Minimum r	Maximum r	Minimum Bz	Maximum Bz	Minimum Bxy	Maximum Bxy
26 mm	27 mm	0.125 T	0.170 T		
27 mm	30 mm				0.075 T
30 mm		-0.020 T	0.000 T		0.025 T

Table 34-3 Accessory side flux density at 0.80 mm from magnet ring surface

Minimum r	Maximum r	Minimum Bz	Maximum Bz	Minimum Bxy	Maximum Bxy
	19.5 mm	-0.020 T	0.020 T		0.025 T
19.5 mm	23 mm				0.065 T
23 mm	24 mm	-0.120 T	-0.085 T		
24 mm	26 mm			0.070 T	0.100 T
26 mm	27 mm	0.85 T	0.120 T		
27 mm	30 mm				0.065 T
30 mm		-0.020 T	0.000 T		0.025 T

The flux density of a MagSafe case orientation magnet shall comply with Table 34-4 (page 154) and Table 34-5 (page 155) across the 2 lines (O1 and O2) in Figure 34-5 (page 153).

Table 34-4 Device side flux density at 0.55 mm from orientation magnet surface

Minimum x	Maximum x	Minimum Bz	Maximum Bz	Minimum Bxy	Maximum Bxy
	-5.0 mm	-0.020 T	0.020 T		0.025 T
-5.0 mm	-4.5 mm	-0.020 T	0.020 T		
-4.5 mm	-2.75 mm			0.080 T	0.110 T
-2.75 mm	-2.0 mm	0.125 T	0.175 T		
-2.0 mm	-0.5 mm			0.110 T	0.155 T
-0.5 mm	0.5 mm	-0.1925 T	-0.140 T		
0.5 mm	2.0 mm			0.110 T	0.155 T
2.0 mm	2.75 mm	0.125 T	0.175 T		
2.75 mm	4.0 mm			0.080 T	0.110 T
4.0 mm	5.0 mm	-0.020 T	0.020 T		
5.0 mm		-0.020 T	0.020 T		0.025 T

2023-10-10 | Copyright © 2023 Apple Inc. All Rights Reserved.

Table 34-5 Accessory side flux density at 0.80 mm from orientation magnet surface

Minimum x	Maximum x	Minimum Bz	Maximum Bz	Minimum Bxy	Maximum Bxy
	-5.0 mm	-0.020 T	0.020 T		0.025 T
-5.0 mm	-4.5 mm	-0.020 T	0.020 T		
-4.5 mm	-2.75 mm			0.050 T	0.070 T
-2.75 mm	-2.0 mm	0.085 T	0.120 T		
-2.0 mm	-0.5 mm			0.0825 T	0.115 T
-0.5 mm	0.5 mm	-0.140 T	-0.0975 T		
0.5 mm	2.0 mm			0.0825 T	0.115 T
2.0 mm	2.75 mm	0.085 T	0.120 T		
2.75 mm	4.0 mm			0.050 T	0.070 T
4.0 mm	5.0 mm	-0.020 T	0.020 T		
5.0 mm		-0.020 T	0.020 T		0.025 T

34.1.2.3 Magnetic Force [中文]

The force normal to the back of the case needed to dislodge a MagSafe accessory, such as the Apple MagSafe Charger, shall meet the requirements in Table 34-6 (page 155).

Table 34-6 Magnetic force

Scenario	Minimum	Maximum
Case attached to device	800 gf	1100 gf
Case only	600 gf	900 gf

34.1.3 Magnetic Interference [中文]

All cases with an integrated MagSafe magnet array shall not interfere with:

- Inductive charging.
- Magnetic stripe cards in an attached iPhone Leather Wallet with MagSafe.

2023-10-10 | Copyright © 2023 Apple Inc. All Rights Reserved.

34.2 MagSafe Accessory Magnet Array [中文]

Figure 34-6 MagSafe Accessory Magnet Array Options

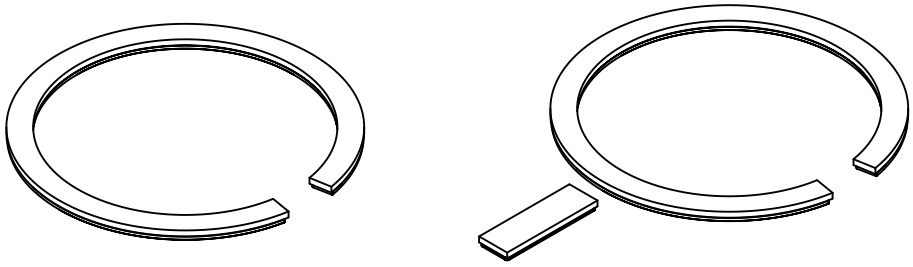

The MagSafe accessory magnet array shall be implemented as a Magnet Ring (page 158). The magnet ring enables the device and accessory to be attached in any orientation. To support a specific orientation, the accessory may include an Orientation Magnet (page 159) as part of the array.

34.2.1 Product Design [中文]

Accessories integrating the MagSafe accessory magnet array shall not enclose the device.

34.2.2 Mechanical [中文]

The accessory shall not interfere with or cause Scratches and Damage (page 25) to the device.

To avoid interference with devices, accessories shall:

- Not exceed 30 mm from the center of the magnet ring surface towards the top edge of the device for all supported device orientations. If the device can be attached in any orientation, the accessory shall not exceed 30 mm in radius around the center of the magnet ring surface.
- Maintain a clearance of 5 mm from the back of the device (mating surface) for any part of the accessory past the 30 mm keep-in constraint.
- Stay within the MagSafe Accessory Enclosure Geometry (page 163).

2023-10-10 | Copyright © 2023 Apple Inc. All Rights Reserved.

Figure 34-7 MagSafe Accessory Clearance

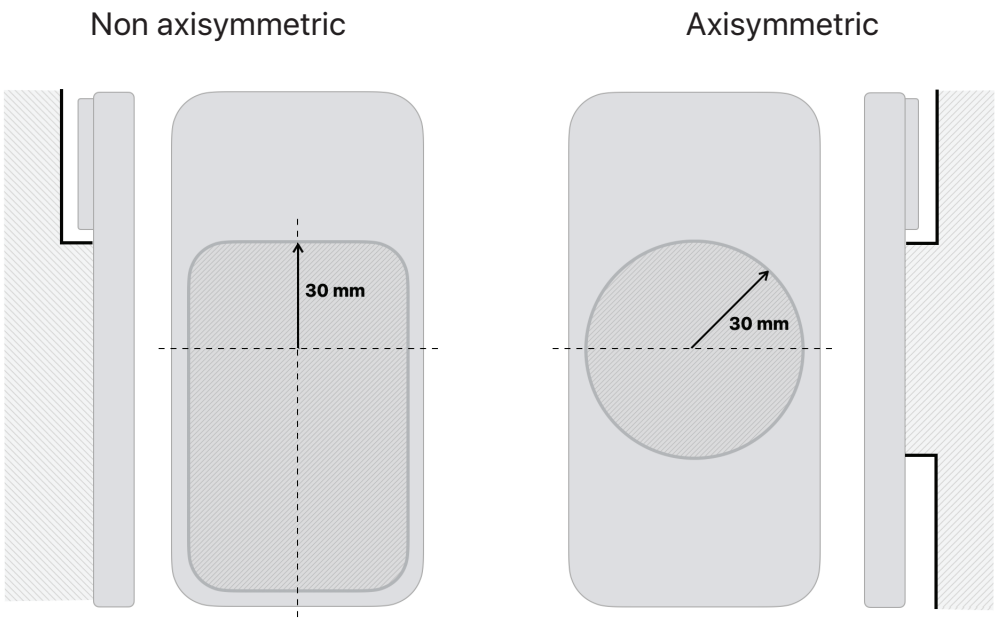

All magnets that are part of the MagSafe accessory magnet array shall be positioned in the same plane.

The MagSafe accessory's Magnet Ring (page 158) shall magnetically self align to the device's magnet ring within a 1.55 mm radial maximum.

34.2.2.1 Magnets [中文]

All MagSafe accessory magnets shall be N48H NdFeB with a 7 µm - 13 µm NiCuNi plating finish (or similar) and shall meet the requirements in Table 34-7 (page 157).

Table 34-7 Magnet Properties

Property	Minimum	Maximum
Br	13.7 kGs	14.1 kGs
Hcb	13.25 kOe	
Hcj	17 kOe	
BHmax	45 MGOe	48 MGOe

2023-10-10 | Copyright © 2023 Apple Inc. All Rights Reserved.

34.2.2.2 Magnet Ring [中文]

The magnet ring shall be positioned in the accessory in compliance with the dimensions and polarity requirements in Figure 34-8 (page 158) and Figure 34-9 (page 159).

Figure 34-8 MagSafe Magnet Ring Dimensions

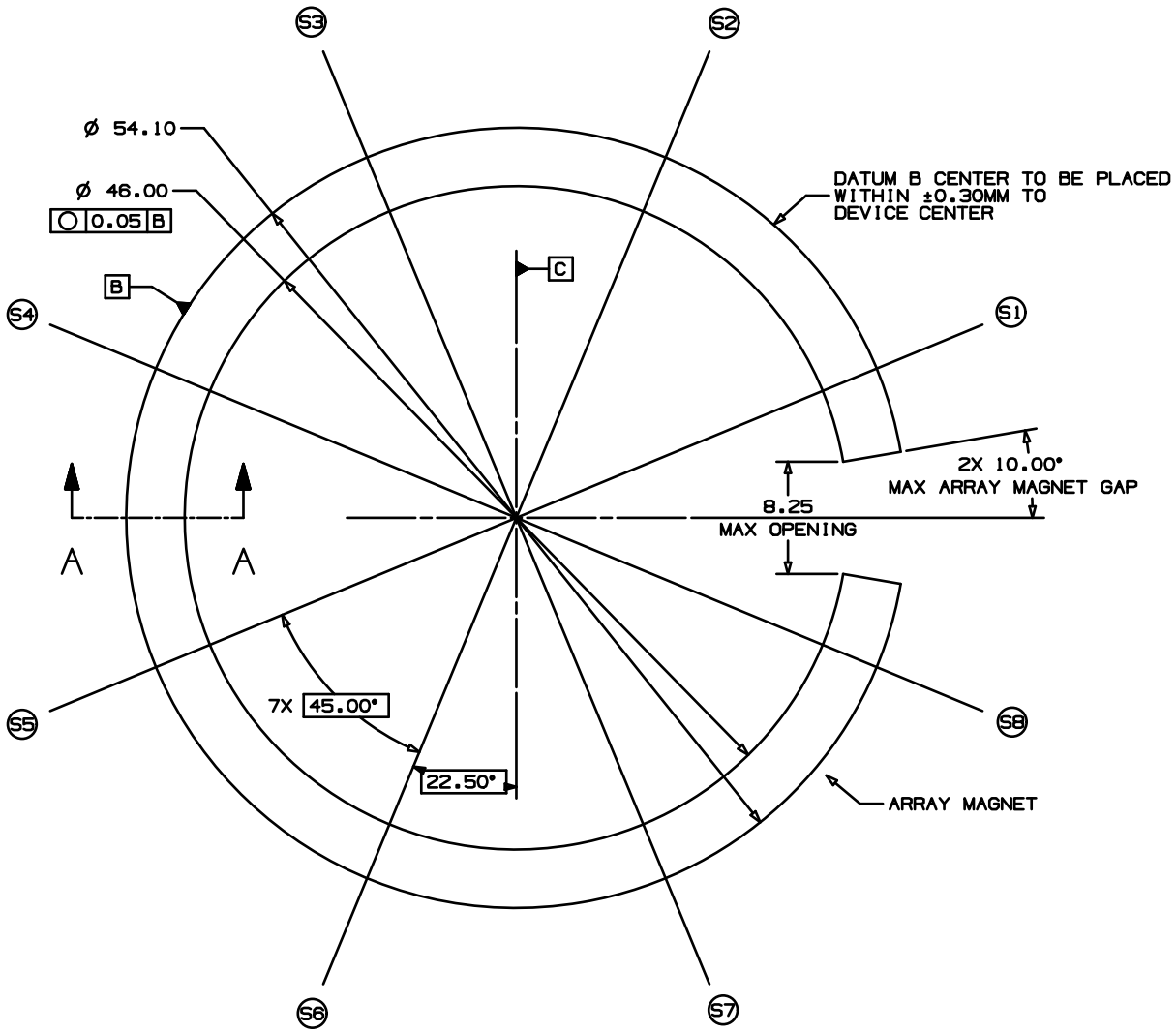

2023-10-10 | Copyright © 2023 Apple Inc. All Rights Reserved.

Figure 34-9 MagSafe Magnet Ring Dimensions and Polarity

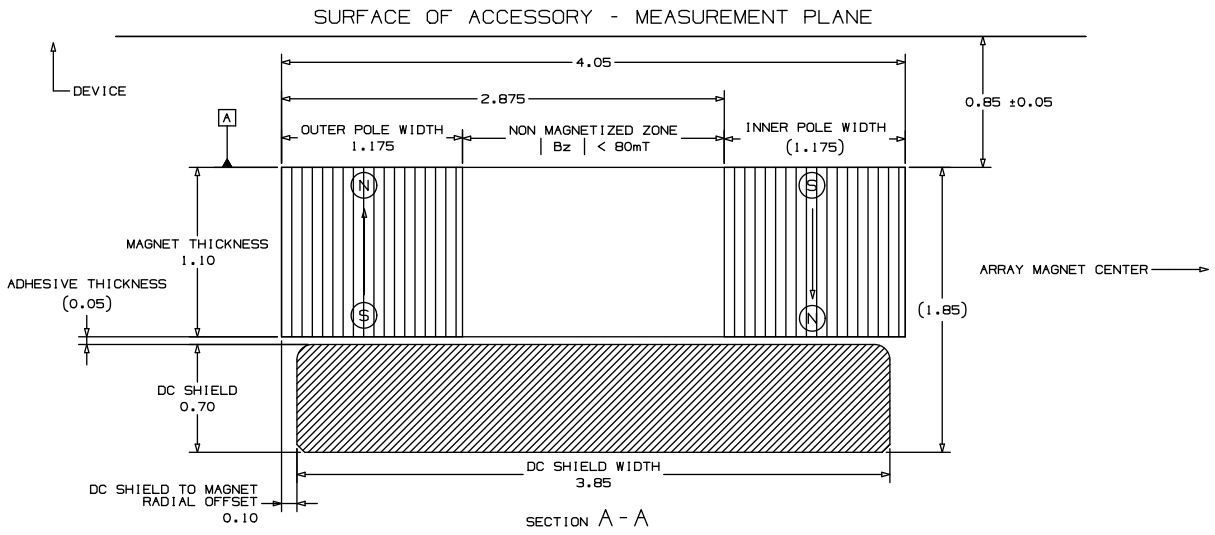

See DC Shield (page 162) for additional requirements of the DC shield specified in Figure 34-9 (page 159).

The flux density of a MagSafe accessory magnet ring shall comply with Table 34-8 (page 159) across the 8 lines (S1 - S8) in Figure 34-8 (page 158).

Table 34-8 Flux density at 0.85 mm from magnet ring surface

Minimum r	Maximum r	Minimum Bz	Maximum Bz	Minimum Bxy	Maximum Bxy
0 mm	19.5 mm	-0.025 T	0.025 T		0.025 T
19.5 mm	23 mm				0.075 T
23 mm	24.5 mm	-0.215 T	-0.155 T		
24.5 mm	25.5 mm			0.170 T	0.215 T
25.5 mm	27 mm	0.155 T	0.215 T		
27 mm	30 mm				0.075 T
30 mm		-0.025 T	0.025 T		0.025 T

34.2.2.3 Orientation Magnet [中文]

If orientation magnets are included, the magnets shall be positioned according to Figure 34-10 (page 160) and Figure 34-11 (page 161).

2023-10-10 | Copyright © 2023 Apple Inc. All Rights Reserved.

Figure 34-10 MagSafe Orientation Magnet Dimensions

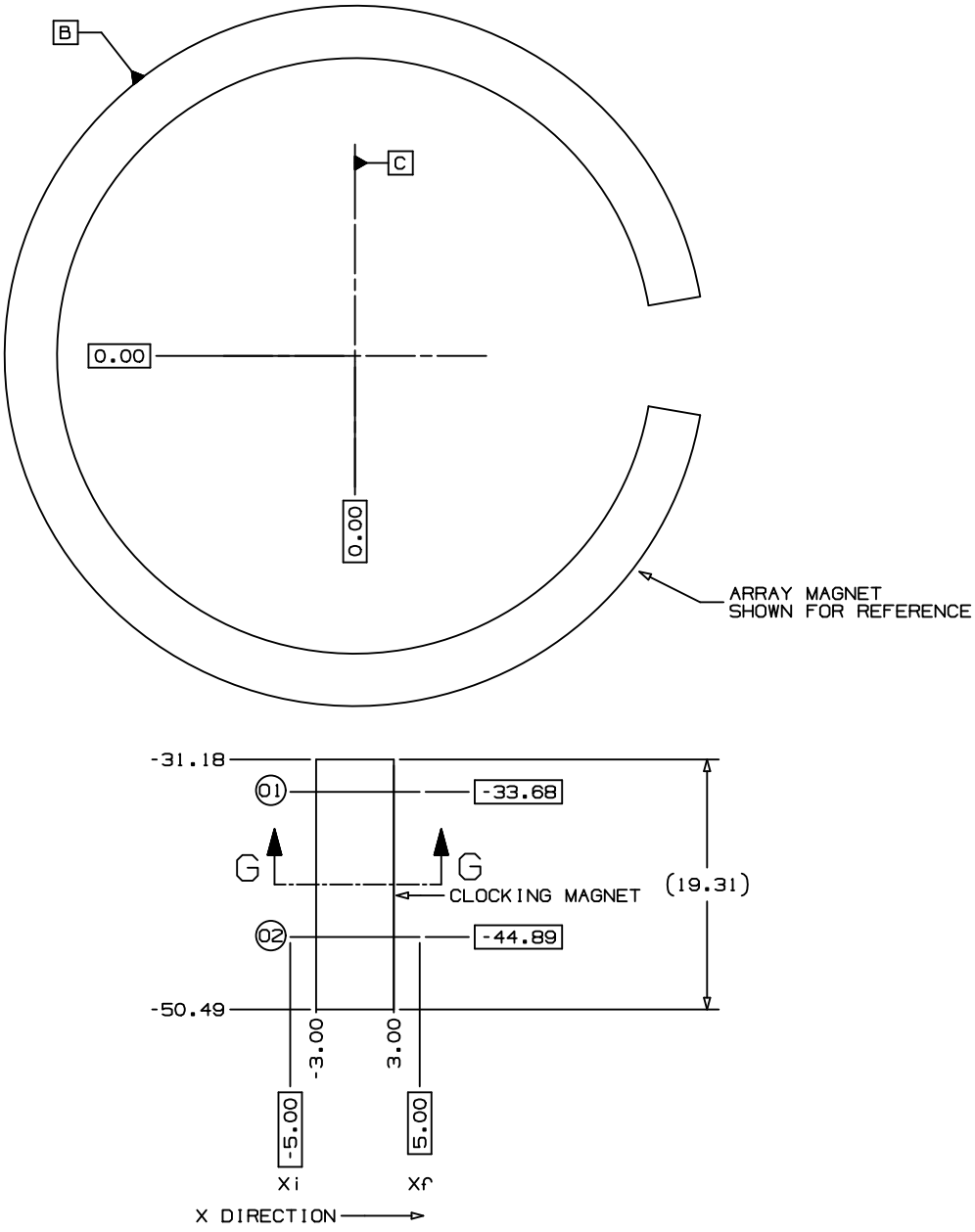

2023-10-10 | Copyright © 2023 Apple Inc. All Rights Reserved.

Figure 34-11 MagSafe Orientation Magnet Dimensions and Polarity

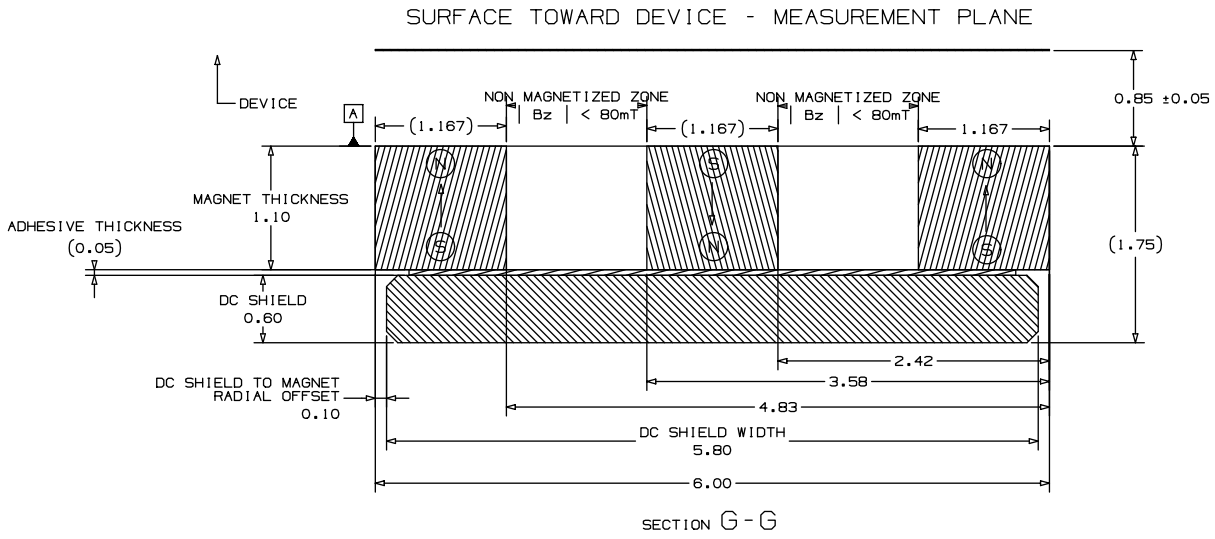

See DC Shield (page 162) for additional requirements of the DC shield specified in Figure 34-11 (page 161).

The flux density of a MagSafe accessory orientation magnet shall comply with Table 34-9 (page 161) across the 2 lines (O1 and O2) in Figure 34-10 (page 160).

Table 34-9 Flux density at 0.85 mm from orientation magnet surface

Minimum x	Maximum x	Minimum Bz	Maximum Bz	Minimum Bxy	Maximum Bxy
	-5.0 mm	-0.025 T	0.025 T		0.025 T
-5.0 mm	-4.5 mm	-0.025 T	0.025 T		
-4.5 mm	-3.0 mm			0.0625 T	0.0875 T
-3.0 mm	-2.0 mm	0.145 T	0.195 T		
-2.0 mm	-0.5 mm			0.165 T	0.215 T
-0.5 mm	0.5 mm	-0.250 T	-0.185 T		
0.5 mm	2.0 mm			0.165 T	0.215 T
2.0 mm	3.0 mm	0.145 T	0.195 T		
3.0 mm	4.0 mm			0.0625 T	0.0875 T
4.0 mm	5.0 mm	-0.025 T	0.025 T		
5.0 mm		-0.025 T	0.025 T		0.025 T

2023-10-10 | Copyright © 2023 Apple Inc. All Rights Reserved.

34.2.2.4 Magnetic Force [中文]

The force normal to the back of the device needed to dislodge the MagSafe accessory shall meet the requirements in Table 34-10 (page 162).

Table 34-10 Magnetic force

Scenario	Minimum	Maximum
Accessory attached to device	650 gf	900 gf

34.2.2.5 DC Shield [中文]

The DC shield shall be low carbon steel (1010, DT4 or similar), per ASTM848, with a 5 µm - 10 µm Ni plating finish or similar.

The DC shield shall have a saturation flux density (B_{sat}) of at least 2.0 T.

2023-10-10 | Copyright © 2023 Apple Inc. All Rights Reserved.

34.3 MagSafe Accessory Enclosure Geometry

[中文]

REV	ECO#	DESCRIPTION OF REVISION

NOTES: (UNLESS OTHERWISE SPECIFIED)

1. SPLINE REPRESENTS MAX MATERIAL CONDITION FOR AN EXTERIOR PRODUCT SURFACE. MAGSAFE COMPATIBLE ACCESSORIES SHALL STAY WITHIN THE PROVIDED SPLINE.
2. FOR NON AXISYMMETRIC APPLICATIONS, SPLINE REPRESENTS MAX MATERIAL CONDITION WHEN VIEWED ALONG X AXIS
3. FOR AXISYMMETRIC APPLICATIONS, A REVOLUTION OF THE SPLINE AROUND THE Z AXIS THROUGH THE CENTER POINT OF THE MAGNET ARRAY REPRESENTS THE MAX MATERIAL CONDITION

[4] ANY CURVATURE DEVIATING BEYOND SPLINE TO EXIST BEYOND 5MM Z CLEARANCE FROM TOP OF PRODUCT

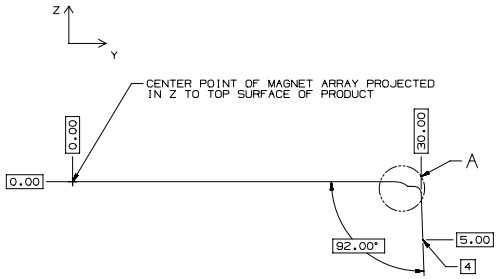

SIDE VIEW PROJECTION OF POSTIVE Y PRODUCT EDGE
(CUT IN X AT MAGNET ARRAY CENTER POINT)

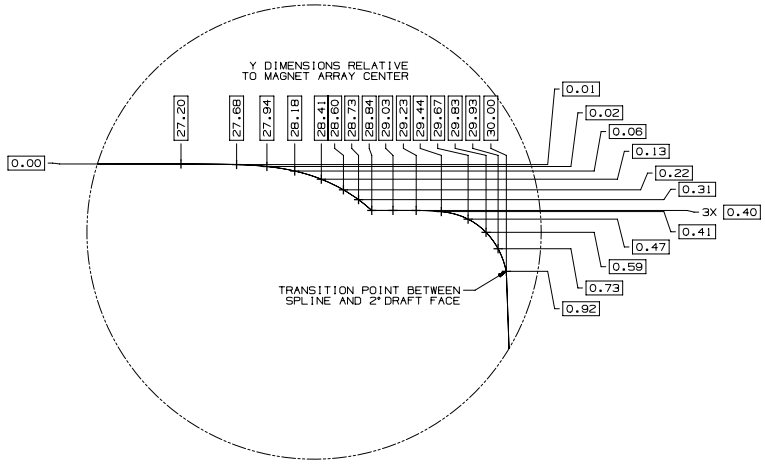

DETAIL A
SCALE 50:1

METRIC	Apple Inc.
DRAFTER: APPLE — DATE	NOTICE OF PROPRIETARY PROPERTY: THE INFORMATION CONTAINED HEREIN IS THE PROPRIETARY PROPERTY OF APPLE INC. THE POSSESSOR AGREES TO THE FOLLOWING: (i) TO MAINTAIN THIS DOCUMENT IN CONFIDENCE (ii) NOT TO REPRODUCE OR COPY IT (iii) NOT TO REVEAL OR PUBLISH IT IN WHOLE OR PART (iv) ALL RIGHTS RESERVED
DESIGNER: APPLE — DATE	
DIMENSIONS ARE IN MILLIMETERS TOLERANCES	TITLE: MAGSAFE COMPATIBLE ENCLOSURE GEOMETRY
DO NOT SCALE DRAWINGS	DRAWING NUMBER — REV. 01
THIRD ANGLE PROJECTION — SIZE D	SCALE NONE — SHT 1 OF 1

NX GENERATED

Copyright © 2023 Apple Inc. All Rights Reserved.

34.4 Test Procedures [中文]

34.4.1 MagSafe Case Magnet Array [中文]

34.4.1.1 Case Thickness [中文]

34.4.1.1.1 Equipment [中文]

- Digital thickness gauge, such as the Mitutoyo 547-520S.

34.4.1.1.2 Procedure [中文]

1. Using the digital thickness gauge, verify the thickness is less than or equal to 2.1 mm at:
   - Four points along the magnet ring.
   - Two points along the orientation magnet.

34.4.1.2 Accessory Clearance [中文]

34.4.1.2.1 Equipment [中文]

- MagSafe-capable device.
- Apple MagSafe Battery Pack.

34.4.1.2.2 Procedure [中文]

1. Attach the case to the device.
2. Attach the Apple MagSafe Battery Pack to the back of the case.
3. Verify the case does not interfere with the Apple MagSafe Battery Pack and only the mating surface is in contact.

34.4.1.3 Magnetic Force [中文]

34.4.1.3.1 Equipment [中文]

- MagSafe-capable device.
- Apple MagSafe Charger with a non-magnetic eyelet screw glued firmly to its back. Pulling on the eyelet should exert a force on the center of the charger.
- Digital force gauge capable of capturing peak values, such as the Chatillon DFX II.
- Hook attachment for digital force gauge.
- Clamps.

2023-10-10 | Copyright © 2023 Apple Inc. All Rights Reserved.

34.4.1.3.2 Procedure [中文]

1. Attach the case to the device.
2. Place the device on a flat level surface with the display facing down and clamp it firmly in place. See Figure 34-12 (page 166).
3. Repeat the following steps 5 times:
   a. Attach the modified Apple MagSafe Charger to the back of the case, allowing the Apple MagSafe Charger to magnetically align.
   b. Connect the force gauge hook to the eyelet. See Figure 34-12 (page 166).
   c. Reset the force gauge's peak force value.
   d. Pull the force gauge vertically until the Apple MagSafe Charger and eyelet assembly dislodge from the case.
   e. Note the peak force value displayed on the force gauge.
4. Calculate the average of the 5 peak force measurements.
5. Verify the average force is within the range of 800 gf to 1100 gf.

2023-10-10 | Copyright © 2023 Apple Inc. All Rights Reserved.

Figure 34-12 Magnetic Force Test Setup

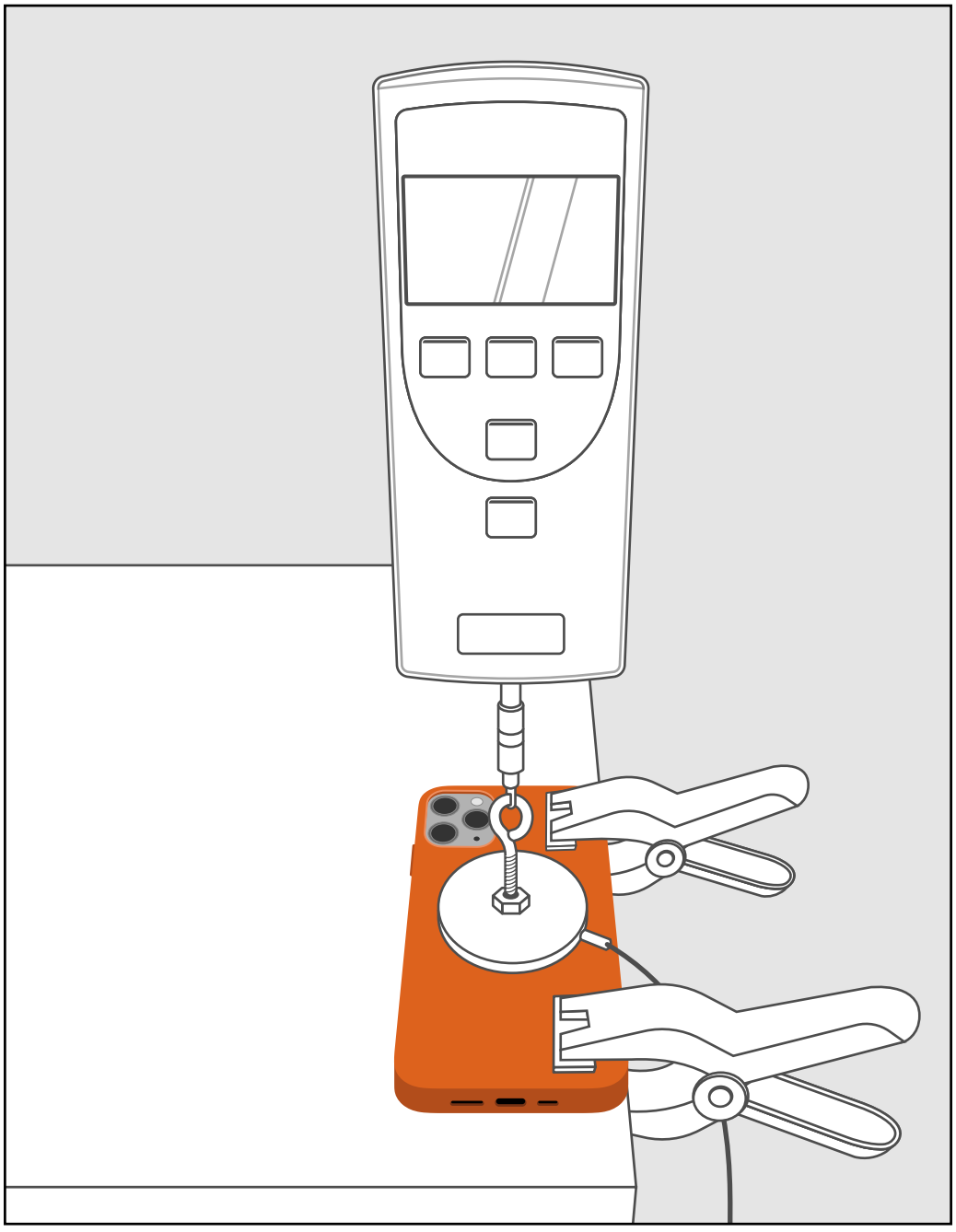

34.4.1.4 iPhone Leather Wallet with MagSafe Detection [中文]

34.4.1.4.1 Equipment [中文]

- MagSafe-capable device.

2023-10-10 | Copyright © 2023 Apple Inc. All Rights Reserved.

- iPhone Leather Wallet with MagSafe.

34.4.1.4.2 Procedure [中文]

1. Attach the case to the device.
2. Attach the wallet to the back of the case.
3. Verify the device displays the wallet animation.

34.4.1.5 Magnetic Stripe Cards in iPhone Leather Wallet with MagSafe [中文]

34.4.1.5.1 Equipment [中文]

- MagSafe-capable device.
- iPhone Leather Wallet with MagSafe.
- Low Coercivity Magnetic stripe (LoCo) cards, such as cards from the following vendors:
  - American Card Service.
  - Allsafe.
  - CI Solutions.
  - PSA.
- LoCo card reader/writer, such as:
  - Q-card Mag3x.
  - Magtek InSpec 9000.
  - Misiri X6BT.
  - Deftun MSR605X.

34.4.1.5.2 Procedure [中文]

1. Attach the accessory to the device.
2. Repeat this procedure for three different brands of LoCo cards:
   a. Write to the LoCo card and confirm readability.
   b. Insert the LoCo card into the wallet with the magnetic stripe facing the magnets.
   c. Place additional cards into the wallet to ensure a LoCo card is in contact with the magnet side of the wallet.
   d. Attach the wallet to the accessory (attached to the device).
   e. Wait 10 seconds.
   f. Remove the wallet from the accessory.
   g. Remove the LoCo card from the wallet.
   h. Verify the LoCo card can be read and it displays the correct information.

2023-10-10 | Copyright © 2023 Apple Inc. All Rights Reserved.

34.4.2 MagSafe Accessory Magnet Array [中文]

34.4.2.1 Orientation Magnet [中文]

If the accessory includes an orientation magnet:

1. Use a straight edge to verify the device contact surfaces of the magnet ring and orientation magnet are coplanar (aligned in the same plane).
2. Attach a MagSafe-capable device to the accessory and align it with the orientation magnet. Verify there are no gaps between the:
   - MagSafe magnet ring and device.
   - MagSafe orientation magnet and device.

2023-10-10 | Copyright © 2023 Apple Inc. All Rights Reserved.

35. Media Library Access

[中文]

The Media Library feature allows accessories to download the metadata contents of a device's media libraries (not the media items themselves) and request playback of media items. The feature is divided into the following sub-features:

- Media Library Information informs the accessory about media libraries available on the device.
- Media Library Updates provide an accessory with an updated view of the contents of a particular media library.
- Media Library Playback allows the accessory to request playback of one or more items from a media library.

See the Accessory Interface Specification (page 23) for more information.

2023-10-10 | Copyright © 2023 Apple Inc. All Rights Reserved.

36. Musical Instrument Digital Interface (MIDI)

[中文]

Compatible USB and Bluetooth Low Energy MIDI accessories can interface directly with iOS 17.0, iPadOS 17.0, and macOS 14.0 Sonoma apps making use of the Core MIDI framework, see https://developer.apple.com/documentation/coremidi.

36.1 Requirements

[中文]

Accessories supporting MIDI as a USB device shall implement a MIDI Streaming IN endpoint and shall support either of the following:

- *USB Device Class Definition for MIDI Devices, Version 2.0*, see https://www.usb.org/document-library/usb-class-definition-midi-devices-v20.
- *USB Device Class Definition for MIDI Devices, Release 1.0*, see https://www.usb.org/document-library/usb-midi-devices-10.

Accessories supporting MIDI over Bluetooth Low Energy shall support the following:

- *MIDI Association MIDI over Bluetooth Low Energy (BLE-MIDI), Version 1.0a*, see https://www.midi.org/specifications-old/item/bluetooth-le-midi.

36.2 Test Procedures

[中文]

Developers should test accessory designs against macOS 14.0 Sonoma using the Audio MIDI Setup app and its MIDI Studio and Test MIDI Setup features. See the user guide at https://support.apple.com/guide/audio-midi-setup/welcome/mac.

2023-10-10 | Copyright © 2023 Apple Inc. All Rights Reserved.

37. Now Playing Updates

[中文]

The Now Playing feature enables an accessory to display information about the current "Now Playing" media source and media item on a device. Media sources include both the built-in Apple Music and Apple Video apps on devices and certain third-party iOS apps supporting the generation of Now Playing metadata, see *MPNowPlayingInfoCenter* in the iOS SDK documentation. Accessories shall be prepared for the Now Playing media source and media item to change at any time, whether the accessory requested the change or not.

See the Accessory Interface Specification (page 23) for more information.

2023-10-10 | Copyright © 2023 Apple Inc. All Rights Reserved.

38. Out-of-Band Bluetooth Pairing

[中文]

Accessories with the ability to connect to a device using Bluetooth and a wired transport should use the Out-of-Band Bluetooth Pairing feature to simplify Bluetooth connection setup.

For example, Lightning to USB charge/sync cables or Lightning to USB accessory cables can be used to exchange Bluetooth pairing information upon initial connection. This may reduce or eliminate the need for instruction manuals to describe how to:

- Put the accessory into a discoverable and pairable mode.
- Initiate Bluetooth pairing on the device using the Settings app.
- Download the accessory's companion app and initiate pairing from the app.

See the Accessory Interface Specification (page 23) for more information.

2023-10-10 | Copyright © 2023 Apple Inc. All Rights Reserved.

39. Siri

[中文]

Siri enables a user to have rich interactions with a device by primarily using their voice.

Accessories supporting Siri shall not use an icon resembling the Siri microphone icon.

The rest of this chapter is applicable to accessories supporting Siri over Bluetooth using HFP commands.

To support Siri using other transports and protocols, the accessory developer shall be a member of the Apple MFi Licensing Program (page 23).

39.1 Enabling Custom Siri Commands

[中文]

Accessories supporting Siri over Bluetooth using HFP commands shall support HFP Command AT+XAPL (page 119). The device will use the information sent by this command to enable and disable custom commands related to Siri.

To receive Siri status events, the accessory shall send the AT+XAPL command after making a successful HFP Service Level Connection (SLC) to the device. The accessory should send an AT+XAPL command first, before sending any of the additional Siri-specific commands described below.

39.2 Obtaining Siri Availability Information

[中文]

After establishing an HFP profile connection, an accessory can determine if Siri is available and enabled on a device. It can also receive notifications of changes in Siri status. If Siri is disabled, Voice Control will be activated instead.

39.2.1 Obtaining Status Information at Connection

[中文]

The accessory should send the following command after making a successful HFP profile (SLC) connection and sending an AT+XAPL command.

39.2.1.1 HFP Command AT+APLSIRI?

[中文]

Description: AT command to retrieve Siri status information.

2023-10-10 | Copyright © 2023 Apple Inc. All Rights Reserved.

Initiator: Accessory

Format: `AT+APLSIRI?`

Response: `+APLSIRI:` *value*

Defined Values:
- 0 = Siri is not available on this platform.
- 1 = Siri is available and enabled.
- 2 = Siri is available but not enabled.

Example: `+APLSIRI:1` (Siri is available and enabled)

39.2.2 Receiving Siri Availability Updates from the Device [中文]

After initialization has been completed, the device will send the accessory the following notification if there is a change in Siri status. This notification will be provided only if the accessory has requested Siri status (by sending `AT+APLSIRI?`) at least once after connection and if the device has reported Siri is available and enabled.

39.2.2.1 HFP Command +APLSIRI [中文]

Description: Unsolicited event indicating a change in Siri status.

Initiator: Device

Format: `+APLSIRI:` *value*

Defined Values:
- 1 = Siri is available and enabled.
- 2 = Siri is available but not enabled.

Example: `+APLSIRI:2` (Siri is available but not enabled)

2023-10-10 | Copyright © 2023 Apple Inc. All Rights Reserved.

Figure 39-1 Siri is Disabled/Enabled from the Device's Settings

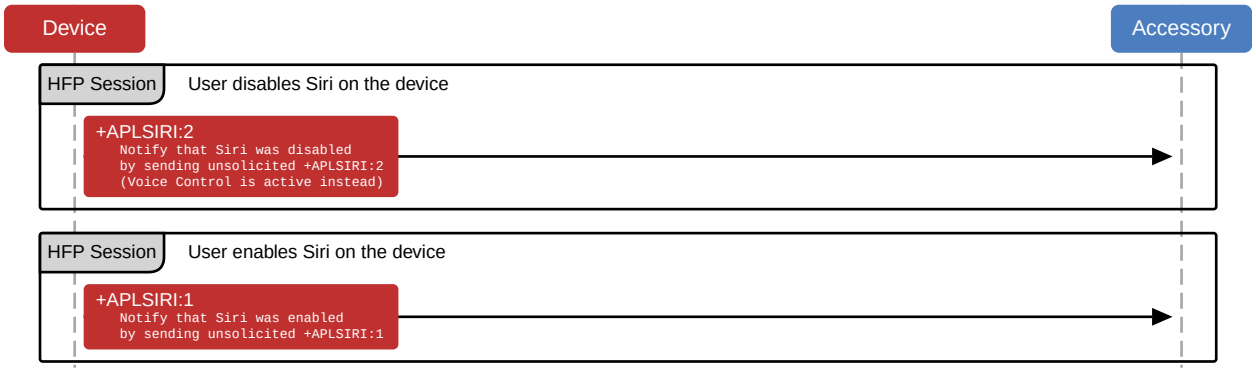

39.3 Initiating a Siri Session [中文]

Once support for Siri is established on both the accessory and the device, a Siri session can be started from either one.

39.3.1 Initiating a Session from the Accessory [中文]

The accessory should only initiate a Siri session as a result of a direct user action.

The accessory shall use the voice recognition command AT+BVRA defined in the Bluetooth *Hands-Free Profile* specification (*Hands-Free Profile* 1.6 profile specification, section 4.25) to initiate a Siri session.

The HFP profile shall be connected and SLC shall exist.

The accessory should use the following command sequence:

- The accessory sends an AT+BVRA=1 command to the device.
- The device sends an OK response.
- The device activates a Siri session and creates a Synchronous Connection (SCO) for the audio.
- If the Siri session is not finished, the accessory shall send AT+BVRA=1 to continue the conversation. This may need to happen multiple times.
- When the Siri session is finished, the device sends a +BVRA:0 result code to the accessory.
- The device disconnects the SCO connection.

While a Siri session is active, the accessory shall let the user continue the conversation and ask follow up questions within the current context. In order to do so, the accessory shall be able to send an AT+BVRA=1 command to the device even after Siri has been already activated and before +BVRA:0

2023-10-10 | Copyright © 2023 Apple Inc. All Rights Reserved.

is received. Figure 39-2 (page 176) shows an overview of the interaction when Siri is triggered from the accessory, the running session was continued twice and once Siri was finished, the device dismissed the session.

Figure 39-2 Initiating a Siri Session from the Accessory

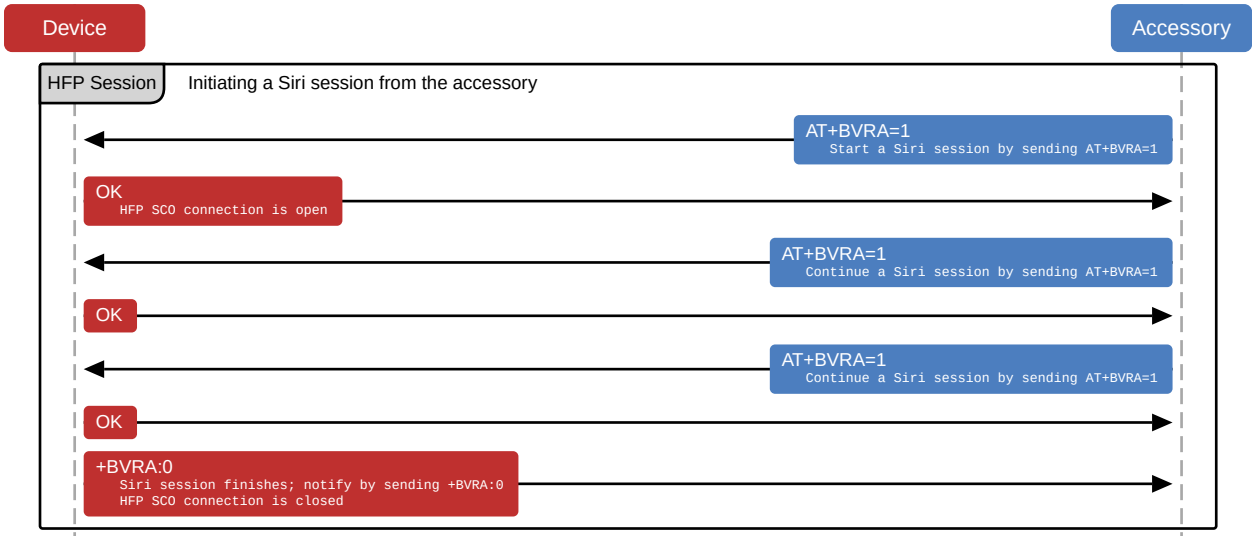

39.3.2 Initiating a Session from the Device [中文]

If the accessory supports voice recognition commands, the device sends a +BVRA event to indicate the start of a Siri session. The accessory shall enable support for voice recognition and indicate it in its feature response as described in the Bluetooth *Hands-Free Profile* 1.6 specification, section 4.34.1, "Bluetooth Defined AT Capabilities." Specifically, the HFP profile shall be connected, SLC shall exist, and voice recognition activation (bit 3) shall be enabled in the AT+BRSF command. The device will not use virtual call functionality for the Siri session if voice recognition activation is supported by the accessory.

The accessory should expect the following command sequence:

- The device sends a +BVRA`:1` event to the accessory.
- The device activates a Siri session and creates a SCO connection for the audio.
- When the Siri session is finished, the device sends a +BVRA`:0` result code to the accessory.
- The device disconnects the SCO connection.

2023-10-10 | Copyright © 2023 Apple Inc. All Rights Reserved.

Figure 39-3 Initiating a Siri Session from the Device

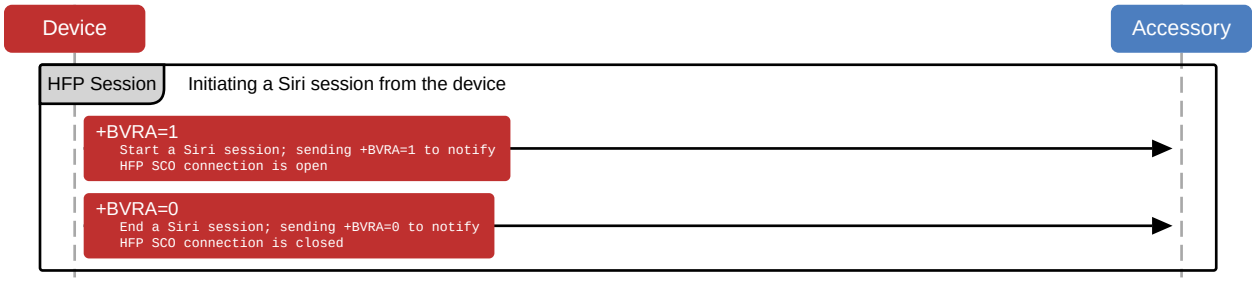

39.3.3 Ending a Session from the Accessory [中文]

Once a Siri session is running the accessory shall be capable of ending the session by sending an AT+BVRA=0 command to the device. Figure 39-4 (page 177) shows an example of ending a running Siri session from the accessory. The accessory should only end an active session as a result of a direct user action.

Figure 39-4 Ending a Siri Session from the Accessory

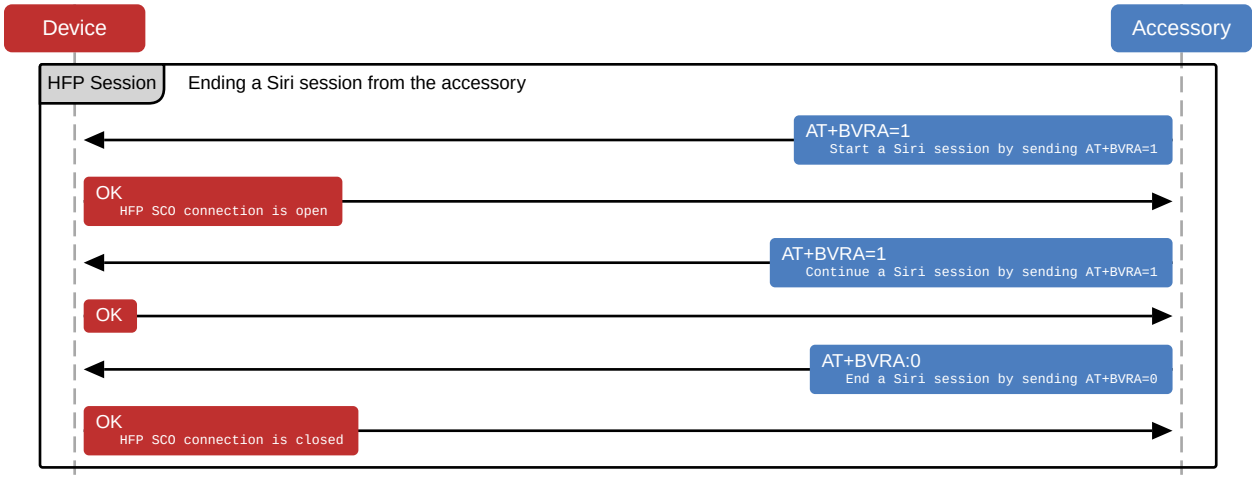

39.4 Siri Eyes Free Mode [中文]

Siri Eyes Free mode is a feature to control Siri responses including display information and can be enabled or disabled as needed. In Siri Eyes Free mode, the user experience is tailored towards a driving scenario and interactions with Siri are done primarily using voice to minimize the need for the user to

2023-10-10 | Copyright © 2023 Apple Inc. All Rights Reserved.

look at a screen. Siri Eyes Free mode is supported only for Bluetooth-enabled vehicle entertainment systems and should not be used by any other accessories. Siri Eyes Free should not be triggered using a voice command.

The device will listen for the HFP AT command `AT+APLEFM` to enable or disable Siri Eyes Free mode.

This command is used by the device to modify Siri responses containing visual information or requiring user interaction. Suitable audio feedback and voice commands will be available to the user based on the initiated Siri use case.

Siri Eyes Free mode is disabled by default. Once the accessory has enabled Siri Eyes Free mode, it remains enabled for all subsequent Siri sessions initiated from the accessory until the accessory disables it or the Bluetooth connection is disconnected.

39.4.1 HFP Command AT+APLEFM [中文]

Description: An accessory sends this command to notify a device of the preferred state of Siri Eyes Free mode.

Initiator: Accessory

Format: `AT+APLEFM=`*value*

Response: `OK`

Defined Values:

- `0x00` = Disable Siri Eyes Free mode.
- `0x01` = Enable Siri Eyes Free mode.
- `0x02-0xFF` = reserved

Example: `AT+APLEFM=1`

39.5 Improving Voice Recognition [中文]

The microphone audio an accessory sends to the device during a Siri session should be suitable for voice recognition. Audio requirements for optimal voice recognition may differ from requirements for optimal human perception (for example, during a cellular phone call).

Filtering of the audio signal to remove echoes or feedback noise is acceptable.

To provide the best possible audio quality as Siri input, the accessory shall observe the following recommendations:

2023-10-10 | Copyright © 2023 Apple Inc. All Rights Reserved.

- **Echo cancellation and noise suppression (EC/NR)**: Directional microphones and linear beamforming with microphone arrays giving improved SNR are recommended. Linear echo cancellation for reducing unwanted audio sources (such as audio output from the system) without having any other effect on the speech signal are also recommended. However, single channel noise reduction methods (such as spectrum subtraction) shall not be applied, as they will be detrimental to the speech recognition accuracy. Similarly, automatic gain control, residual echo suppression and attempts to blank out non-speech periods in the waveform shall not be applied.
- **Signal gain**: When adjusting signal levels, the accessory shall avoid artifacts, dropouts, and clipping in all circumstances. Automatic Gain Control is not recommended. If the accessory adjusts signal gain, the gain should be held constant across each spoken utterance. The nominal level measured at the uplink output of the accessory should be A-weighted -30 dB ±2 dB root-mean-square (RMS), expressed in units relative to full-scale (dBFS(A)). Alternatively, the nominal level may be 13 dB ±2 dB SLR if using the ITU measurement procedure.
- **Signal-to-noise ratio (SNR)**: The average SNR should be greater than 20 dB. Below 20 dB, recognition rates will be impacted.
- **Reverberation**: An RT60 time less than 200 ms should be maintained.

39.5.1 Wide Band Speech Support [中文]

An accessory using Siri should support 16 kHz wide band speech audio for better audio quality and voice recognition performance. See the Bluetooth *Hands-Free Profile* 1.6 specification for details about wide band speech audio. Narrow band audio signal (8 kHz) is supported but not recommended.

39.6 Optimizing the Siri Experience [中文]

The start of a Siri session should not be accompanied by local beeps or verbal indications (such as an announcement of "...voice dialing...") from the accessory. When a Siri session becomes active, the device sends two beeps indicating that Siri is ready to receive instructions. Adding extra audible notifications only inserts delays in the system.

The accessory should wait for the device to end each Siri session.

The accessory should not send an `AT+BVRA=0` command unless it is prompted to do so by user interaction.

The accessory should be capable of rendering audio within 200 ms of SCO connection activation to ensure that the user always hears the Siri introductory beeps.

2023-10-10 | Copyright © 2023 Apple Inc. All Rights Reserved.

39.7 Common Siri Applications [中文]

Siri can send messages, find points of interests, place phone calls, and much more. As Siri capabilities are constantly growing, additional use cases may become available after the initial integration. In Siri Eyes Free mode, some of these use cases may not be accessible as the user experience is tailored towards a driving scenario.

39.7.1 Initialization Procedure After Connection is Established [中文]

Figure 39-5 (page 180) outlines the sequence the accessory has to trigger to be able to use Siri on a device. After establishing an HFP profile connection, the accessory shall first enable the custom Siri commands by sending AT+XAPL and provide the features it supports. After a confirmation is received from the device, the accessory should determine Siri's availability with AT+APLSIRI?.

Vehicles with Bluetooth-enabled infotainment systems can also enable Siri Eyes Free Mode during initialization. This is detailed in Figure 39-6 (page 181).

Figure 39-5 Siri Initialization Procedure

Figure 39-6 Siri Initialization Procedure with Siri Eyes Free

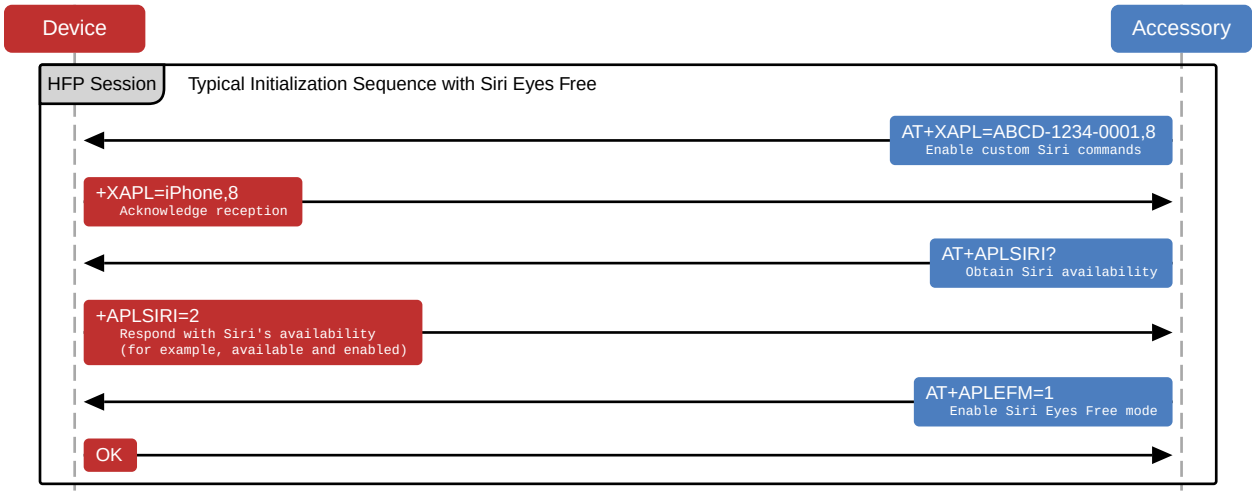

39.7.2 Phone Dialing Using Siri [中文]

Upon user request, Siri can initiate an outgoing phone call. The device will initiate HFP call signaling to establish a phone call as described in Bluetooth (page 207). The accessory shall be able to transition to Hands-Free dialing at any time during or after a Siri session when signaled by the device.

39.7.3 Audio Routing and Media Playback Using Siri [中文]

Siri can control the media playback on a device, and if Siri determines the user wants to play or pause music, Siri will either start, pause or resume media playback. The device will send a notification to the accessory indicating a change in playback state and any associated track information. The accessory shall respond to the notifications, start or stop the music playback as requested, as well as update the correct playback state (for example, shuffle, repeat).

The accessory shall not force a change in the playback state after a Siri session is ended. If music was playing before Siri was started, it shall continue playing, if it was paused, it shall remain paused.

After Siri starts music playback the accessory shall set its current audio route to match the audio source, depending on how audio is being received from the device (using Bluetooth or by a wired connection).

The available media playback notifications depend on the audio route being used:

- Bluetooth audio routes shall use the approach described in Notifications (page 214) and Audio Data Received using A2DP Profile (page 217).
- Wired audio routes shall use iAP2.

2023-10-10 | Copyright © 2023 Apple Inc. All Rights Reserved.

39.7.4 Turn-By-Turn Directions Using Siri [中文]

Siri can initiate active route guidance to provide turn-by-turn directions. In case the device is the active source and is already playing music, turn-by-turn directions will be mixed in as part of the audio stream. In case the device is not playing music, the accessory should be able to mix in turn-by-turn directions with the active audio source.

The device will notify the accessory to play turn-by-turn directions only over Bluetooth. Detailed information on how to distinguish between music playback and turn-by-turn notifications is available in Notifications (page 214).

39.8 User Interaction with Siri Eyes Free in a Vehicle [中文]

A vehicle using Siri Eyes Free mode shall integrate the Siri experience with the existing in-vehicle entertainment system and controls. The vehicle should provide a convenient interface to initiate, continue, and end a Siri session. Once a Siri session is running, the vehicle shall display a visual cue indicating voice recognition is in use. Figure 39-7 (page 183) outlines how a Siri interaction should be designed.

2023-10-10 | Copyright © 2023 Apple Inc. All Rights Reserved.

Figure 39-7 Siri Eyes Free User Interaction

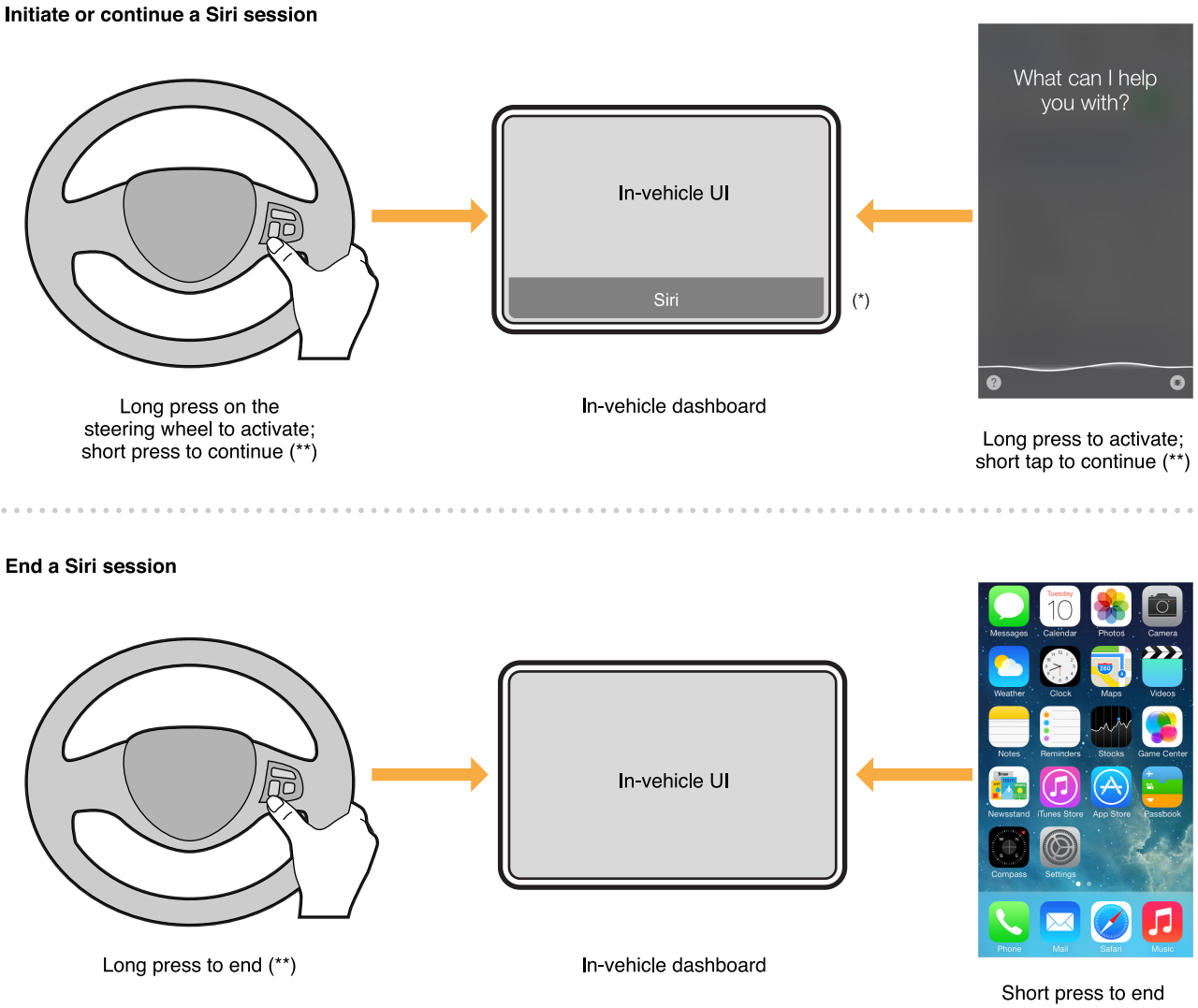

As shown in Figure 39-7 (page 183):

- (*) If the accessory wishes to indicate Siri is active, it shall do one of the following:
  - Display the word 'Siri' (as capitalized) with no additional text or icon.
  - Use generic text or icon not resembling the Siri microphone icon.
- (**) If the vehicle is equipped with steering wheel controls, the steering wheel shall have a dedicated button or a long-press action on a button to start, continue and end a Siri session. The button long-press shall be 600 ms or less. If no steering wheel controls are available, a soft button shall be available within the in-vehicle user interface to start, continue or end a Siri session.

2023-10-10 | Copyright © 2023 Apple Inc. All Rights Reserved.

When a vehicle enables Siri Eyes Free mode, the device will not display any onscreen Siri content. If the device was locked at the time the Siri session was activated from the vehicle, it will remain locked and the screen will not turn on. If the user unlocks or manually activates the device while in an Eyes Free Session there will be a notification the device is in an active Siri session but there will be no visual Siri content displayed.

39.9 Enabling/Disabling Siri from the Device [中文]

The user has the ability to disable or enable Siri from the Settings menu on the device. When Siri is disabled, Voice Control becomes the recognition engine on the device and will be triggered by default. The accessory may choose to either:

- Activate Voice Control (in the same way Siri is activated) as in Figure 39-8 (page 184).
- Display a warning message and not send an activation command to the device as in Figure 39-9 (page 185).

Figure 39-8 Siri is Disabled - Activating Voice Control

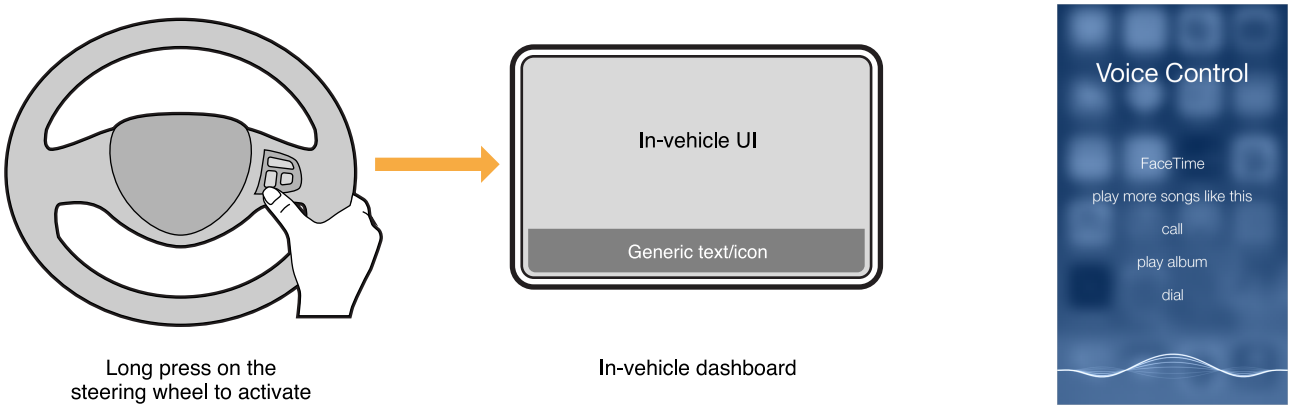

Figure 39-9 Siri is Disabled - Displaying a Warning Message

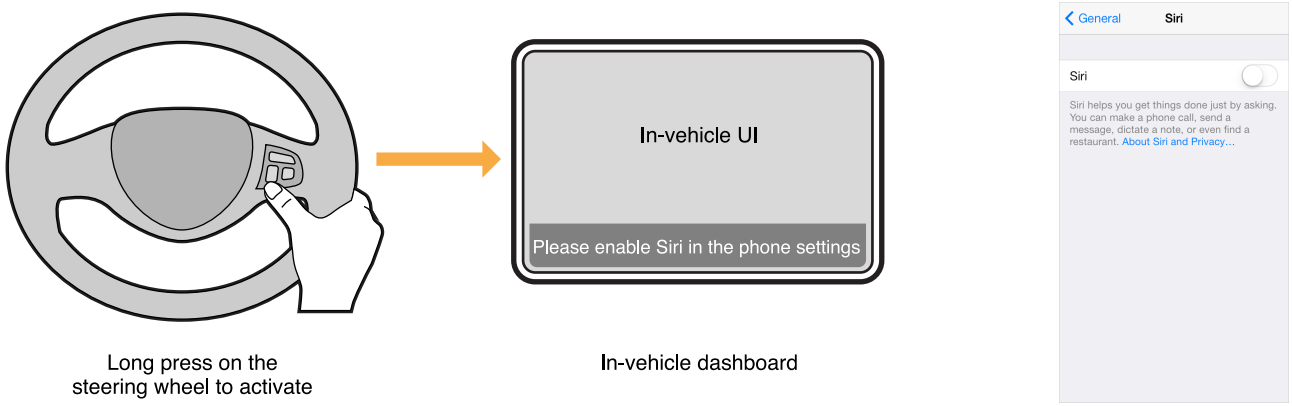

39.10 Test Procedures [中文]

39.10.1 Siri Eyes Free [中文]

The following test procedures are applicable to accessories interacting with Siri Eyes Free.

The ideal test operator is a native speaker of North American English. If the operator's native language is not North American English, set Siri to the operator's native language and translate the provided phrases to that language.

39.10.1.1 General [中文]

1. Pair and establish a Bluetooth Hands-Free Profile (HFP) connection between the iPhone and the head unit. Activate Siri from the vehicle steering wheel button (for example, by pressing and holding):
   a. Observe the iPhone screen remains inactive after a Siri session has started (a visual indicator will be visible on the device if the screen is activated manually).
   b. Ensure Siri's opening chime is heard completely through the vehicle speakers.
   c. Observe a visual notification in the in-car User Interface (UI) indicating a Siri session is active (for example, text notification, on-screen UI).
2. Activate Siri from the vehicle steering wheel button and say "Send a message to Peter. How are you?". While still saying the message, press the vehicle steering wheel button to cancel Siri:
   a. Ensure the iPhone screen remains inactive (if manually activated, the visual indicator on the phone will disappear).
   b. Verify the in-car Siri UI interaction is dismissed and the head unit returns to its prior state before the Siri interaction.

2023-10-10 | Copyright © 2023 Apple Inc. All Rights Reserved.

3. Activate Siri from the vehicle steering wheel button and say "How is the weather in San Francisco?". Wait for Siri to respond with the weather forecast. Once the weather forecast is complete, resume Siri from the vehicle steering wheel button and say "What about New York?":
   a. Confirm the visual indicator is still active on the phone.
   b. Listen for the Siri opening chime.
   c. Verify the vehicle UI indicates a Siri session is active.
   d. Verify Siri responds with the weather forecast for New York.
4. In case the vehicle UI offers on-screen controls to activate/cancel/resume Siri, repeat steps (1) to (3) for all on-screen controls.
5. Activate Siri from the steering wheel button and say "What's the time?". Listen to the current time and do not interact with Siri or the iPhone. After 5 seconds have expired:
   a. Observe the visual Siri session indicator on the phone is no longer visible.
   b. Verify the in-car UI for Siri interaction was dismissed.
   c. Verify the head unit returned to its prior state before the Siri interaction.
6. Listen to FM radio from the car speakers (for example, no A2DP streaming active). Press and hold the phone's Home button to activate Siri from the phone:
   a. Observe a visual notification in the in-car UI indicating a Siri session is active (textual notification, on-screen UI, etc.).
   b. Observe Siri's interaction on the phone's screen and ask "What's the time?".
   c. After Siri has responded, lock the phone again to dismiss the Siri session by pressing the phone's sleep/wake or side button.
7. On the phone go to Settings and turn Siri off. Activate Siri from the head unit. Observe one of the following depending on the actual implementation (a) Voice Control starts instead of Siri (b) The head unit displays a warning indicating Siri Eyes Free is not available.
8. On the phone go to Settings and turn Siri back on. Verify Siri can be activated/cancelled from the head unit and from the Home button on the phone.
9. Turn Bluetooth off using Settings on the phone. Verify Siri cannot be started.
10. Turn Bluetooth back on using Settings on the phone. Verify Bluetooth HFP profile reconnects and Siri can be activated/cancelled from the head unit and from the phone's Home button.
11. Confirm there is no accessory battery status level indicator icon displayed on the phone's status bar.

39.10.1.2 Siri Dialog [中文]

1. Activate Siri from the vehicle's steering wheel button and say "Send a text message to *insert contact name*". When Siri prompts "What would you like it to say?", dictate a short message. After Siri has read back the dictated message, say "Review it". After Siri has read back the message again, say "Review it" again. Repeat this cycle ~5 times to ensure the head unit is able to handle a long interaction with Siri. At the end say "Send it" and verify the message is sent. Verify the opening

2023-10-10 | Copyright © 2023 Apple Inc. All Rights Reserved.

chime is audible and the message is sent. After the Siri session is closed, verify the audio playback went back to the state it was in before Siri was activated (that is, if audio was paused it remains paused, if it was playing it resumes playing).

2. Start Siri from the vehicle's steering wheel button and ask for directions. Follow up through the dialog until the navigation is started. Verify the Siri session is closed and the audio playback goes back to the state it was in before Siri was activated (that is, if audio was paused it remains paused, if it was playing it resumes playing).
3. Start Siri from the vehicle's steering wheel button and say "Search the web for polar bears". Verify Siri Eyes Free mode is on and this use case is blocked by Siri. In some implementations the vehicle has to be in motion before Siri Eyes Free is activated by the car kit.
4. Start Siri from the vehicle's steering wheel button and say "What is the current time in Munich?". After Siri answers but before ~5 seconds have elapsed, resume Siri (for example, using a short press on the steering wheel button) and verify Siri is activated again. Say "What about San Francisco?". Repeat (with a different city) and verify this can continue indefinitely as long as there is a short press on the steering wheel button within 5 seconds of the last response.

39.10.1.3 Bluetooth HFP A2DP Music [中文]

1. Establish a Bluetooth A2DP connection and switch to Bluetooth audio source on the head unit. Activate Siri and say "Next track". Verify the track advances and audio is played through the vehicle speakers. Verify the Siri in-car UI is dismissed and the head unit returns to its initial state.
2. Activate Siri and say "Pause the music". Verify audio remains paused after Siri has been dismissed. Verify the Siri in-car UI is dismissed and the head unit goes back to its initial state.
3. Pause music playback on the head unit (using AVRCP command). Activate Siri and ask "What time is it?". Verify the music playback remains paused after the Siri session has been dismissed. Verify the Siri in-car UI is dismissed and the head unit goes back to its initial state.
4. Switch to FM radio on the head unit. Activate Siri and say "Play me a song". Verify the head unit is able to automatically switch to Bluetooth audio and iPhone music starts playing. Verify the beginning of the selected track is heard (for example, there is no skipping of audio packets). Verify the Siri in-car UI is dismissed and the head unit returns to its initial state.
5. Activate Siri and say "Shuffle all songs". Verify the head unit correctly updates the NowPlaying track information. Verify the Siri in-car UI is dismissed and the head unit returns to its initial state.
6. Activate Siri and ask to play a specific artist or title. Verify the Siri session is dismissed after the music starts. Confirm the correct metadata is displayed on the screen. Verify the Siri in-car UI is dismissed and the head unit returns to its initial state.

39.10.1.4 Call [中文]

1. Activate Siri and call a contact with more than one phone number (for example, home and mobile). Wait for Siri's response asking which phone number to call. Answer with "home". Verify call transition is handled correctly by the head unit and any Siri UI displayed on the vehicle screen is dismissed.

2023-10-10 | Copyright © 2023 Apple Inc. All Rights Reserved.

2. While iPhone music is playing, activate Siri and say "Call *(insert contact to call)*". Verify call transition is handled correctly by the head unit. Verify iPhone music playback resumes after the call has been answered and terminated on the far end. Verify the Siri in-car UI is dismissed and the head unit returns to its initial state.
3. While iPhone music is playing, start Siri and say "Call *(insert contact to call)*". Verify call transition is handled correctly by the head unit. Verify iPhone music playback resumes after the call has been answered and terminated on the near end (that is, on the head unit). Verify the Siri in-car UI is dismissed and the head unit returns to its initial state.
4. While in a Siri session, receive an incoming call on the head unit. Verify the head unit handles call-signaling correctly and transitions to the phone UI once the call has been accepted. Verify the Siri in-car UI is dismissed and the head unit returns to its initial state.

39.10.1.5 Bluetooth + Wired iAP2 [中文]

1. Connect the device to the head unit using a Lightning connector (iPhone 5). Switch to iPod music and verify audio is playing. Activate Siri and say "Next track". Verify the track advances and the head unit displays the track metadata correctly. Verify the Siri in-car UI is dismissed and the head unit returns to its initial state.
2. From the head unit UI, select a playlist with a single song and start playing it. Start Siri from the vehicle steering wheel and say "Play ..... *make sure to select a song to play that is (a) not in the same album as the single-track playlist and (b) not song track index 0 of its album*". Verify the new song starts playing and the head unit correctly displays the track metadata for the new song. Verify the Siri in-car UI is dismissed and the head unit returns to its initial state.
3. Turn Shuffle off on the head unit UI. Then start Siri and say "Shuffle all songs". Verify the shuffle indicator on the head unit UI is updated and the correct track metadata for the new now playing song is displayed correctly. Verify the Siri in-car UI is dismissed and the head unit returns to its initial state.
4. Switch to FM radio on the head unit. Activate Siri and say "Play me a song". Verify the head unit is able to automatically switch to iPOD audio source and iPOD audio starts playing through the speakers. Verify there is no skipping of audio at the beginning of the selected track. Verify the Siri in-car UI is dismissed and the head unit returns to its initial state.
5. Pause music playback on the head unit (using iAP2 commands). Activate Siri and ask "What time is it?". Verify music playback remains paused after the Siri session has been dismissed. Verify the Siri in-car UI is dismissed and the head unit returns to its initial state.
6. While iPhone music is playing, start Siri and say "Call *(insert contact to call)*". Verify call transition is handled correctly by the head unit. Verify iPhone music playback resumes after the call has been answered and terminated on the far end. Verify the Siri in-car UI is dismissed and the head unit returns to its initial state.

2023-10-10 | Copyright © 2023 Apple Inc. All Rights Reserved.

7. While iPhone music is playing, start Siri and say "Call *(insert contact to call)*". Verify call transition is handled correctly by the head unit. Verify iPhone music playback resumes after the call has been answered and terminated on the near end (for example, on the head unit). Verify the Siri in-car UI is dismissed and the head unit returns to its initial state.
8. Pause music playback on the head unit (using iAP2 commands). Start Siri and say "Call *insert contact name to call*". Verify call transition is handled correctly by the head unit. Verify iPhone music playback remains paused after the call has been answered and terminated on the far end. Verify the Siri in-car UI is dismissed and the head unit returns to its initial state.

2023-10-10 | Copyright © 2023 Apple Inc. All Rights Reserved.

40. Wi-Fi Information Sharing

[中文]

Wi-Fi configuration information can be exchanged between devices and accessories.

Devices can share Wi-Fi configuration information with an accessory. The accessory can initiate this process, but the user shall grant permission for the device to share this information. The device can only share information about the currently connected Wi-Fi network, and this feature will not account for other router-configured access control mechanisms, such as RADIUS or MAC address filtering.

Figure 40-1 Wi-Fi Information Sharing Alert

See the Accessory Interface Specification (page 23) for more information.

2023-10-10 | Copyright © 2023 Apple Inc. All Rights Reserved.

Protocols

41. USB Power Capability Vendor Request [中文]

If the accessory is a USB host, and it does not implement iAP2 (page 202), then it may send an Apple-specific USB vendor request communicating how much power is available to the device. In this case, the accessory shall enumerate and identify the presence of a device, then send the vendor request. The vendor request shall be sent every time the device is enumerated by the accessory.

Table 41-1 USB Vendor Request for non-iAP2 accessory USB Embedded Host

Field	Value	Comments
`bmRequestType`	`0x40`	Device-to-host request, vendor-defined type, device is recipient.
`bRequest`	`0x40`	Vendor-defined USB get enabled capabilities request.
`wValue`	See comments.	Charging current available, expressed as an offset from 500 mA. Shall be 500 (1000 mA charging current available), 1000 (1500 mA charging current available), 1600 (2100 mA charging current available), 1900 (2400 mA charging current available), or 2500 (3000 mA charging current available).
`wIndex`	See comments.	Shall be the same as wValue.
`wLength`	`0`	0 bytes expected.

2023-10-10 | Copyright © 2023 Apple Inc. All Rights Reserved.

42. USB D+/D- Resistor Networks

[中文]

Accessories not implementing any of the following may use USB resistor networks to identify their current capability:

- iAP2 (page 202).
- USB Power Capability Vendor Request (page 192).
- USB Type-C Current (page 197).
- USB Power Delivery (page 196).

Device power draw varies with environmental factors. All accessory power source testing shall be performed with programmable loads, not devices.

42.1 Declaring Power Source Capability

[中文]

Accessories shall connect the USB D+ and USB D- pins to resistor networks as shown in Figure 42-1 (page 193).

Figure 42-1 USB D+/D- resistor networks

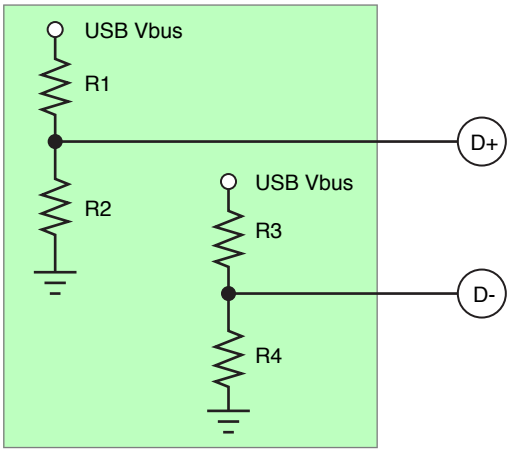

Every iOS device-compatible connector on an accessory using a USB resistor network shall have its own set of resistors. The accessory shall be capable of supplying the total current required when all connectors are in use, regardless of whether the connectors are compatible with devices or not.

2023-10-10 | Copyright © 2023 Apple Inc. All Rights Reserved.

The resistor network shall be connected at all times unless the accessory uses one of the following methods to enable charging or detect the presence of a device. In these cases, it shall immediately present the resistor network. The accessory:

- Uses a direct user action to enable charging.
- Senses the attachment of the device using electromechanical means such as a contact switch.

The accessory shall not monitor the USB D+ and USB D- pins to detect the presence of a device.

All resistors used to implement the networks specified in Figure 42-1 (page 193) shall have a tolerance of 1% or better. The resistor network shall not be emulated by driving the voltage of the USB D+/D- pins using some other means.

Table 42-1 USB D+/D- resistor values

Max Current	R1	R2	R3	R4
3000 mA	43.2 kΩ	49.9 kΩ	24.9 kΩ	49.9 kΩ
2400 mA	43.2 kΩ	49.9 kΩ	43.2 kΩ	49.9 kΩ
2100 mA	43.2 kΩ	49.9 kΩ	75.0 kΩ	49.9 kΩ
1000 mA	75.0 kΩ	49.9 kΩ	43.2 kΩ	49.9 kΩ

42.2 Identifying Power Source Current Limit [中文]

Accessories shall take into account the variation of USB VBUS voltage and resistor tolerances.

The resistor network values and corresponding current source limits should be identified using the following procedures:

1. Read the VBUS voltage using an ADC. If value is less than 4.5 V, return no resistors detected.
2. Pull-down the D+ and D- lines and read the voltage using an ADC. If either voltage value is less than 1 V, return no resistors detected.
3. Disable the D+ and D- pull-downs and allow the voltage to return to normal.
4. Read the D+ and D- voltages using an ADC (to determine the value for R1 and R3 respectively):
   - If voltage is >2.995 V (based on 1 MΩ load impedance), assume a resistor value of 24.9 kΩ.
   - If voltage is between 2.320 V and 2.995 V (based on 1 MΩ load impedance), assume a resistor value of 43.2 kΩ.
   - If voltage is < 2.320 V (based on 1 MΩ load impedance), assume a resistor value of 75.0 kΩ.
5. Determine the max current based on Table 42-2 (page 195).
6. If resistor values could not be identified, proceed to identify the power available based on the *USB Battery Charging Specification, Release 1.2*.

2023-10-10 | Copyright © 2023 Apple Inc. All Rights Reserved.

Table 42-2 USB D+/D- resistor values

Max Current	R1	R2	R3	R4
1000 mA	24.9 kΩ	49.9 kΩ	24.9 kΩ	49.9 kΩ
1000 mA	24.9 kΩ	49.9 kΩ	43.2 kΩ	49.9 kΩ
1000 mA	24.9 kΩ	49.9 kΩ	75.0 kΩ	49.9 kΩ
3000 mA	43.2 kΩ	49.9 kΩ	24.9 kΩ	49.9 kΩ
2400 mA	43.2 kΩ	49.9 kΩ	43.2 kΩ	49.9 kΩ
2100 mA	43.2 kΩ	49.9 kΩ	75.0 kΩ	49.9 kΩ
1000 mA	75.0 kΩ	49.9 kΩ	24.9 kΩ	49.9 kΩ
1000 mA	75.0 kΩ	49.9 kΩ	43.2 kΩ	49.9 kΩ
500 mA	75.0 kΩ	49.9 kΩ	75.0 kΩ	49.9 kΩ

2023-10-10 | Copyright © 2023 Apple Inc. All Rights Reserved.

43. USB Power Delivery

[中文]

Accessories providing direct power using USB Power Delivery (USB PD) or drawing power from USB PD sources shall comply with the *USB Power Delivery Specification, Revision 3.1, Version 1.3*.

Accessories implementing USB PD shall incorporate a USB-IF certified PD controller with a *Silicon* Test ID from the USB-IF, see https://www.usb.org/products.

Apple recommends the GRL-USB-PD-C2 (see https://www.graniteriverlabs.com/en-us/test-solutions/protocol-power-test-solutions/usb-pd-c2) for USB PD testing and compliance verification.

2023-10-10 | Copyright © 2023 Apple Inc. All Rights Reserved.

44. USB Type-C Current

[中文]

Accessories providing direct power using USB Type-C Current or drawing power from USB Type-C Current sources shall comply with the *USB Type-C Cable and Connector Specification, Release 2.2*, section 4.6.2.

Apple recommends the GRL-USB-PD-C2 (see https://www.graniteriverlabs.com/en-us/test-solutions/protocol-power-test-solutions/usb-pd-c2) for USB Type-C Current testing and compliance verification.

2023-10-10 | Copyright © 2023 Apple Inc. All Rights Reserved.

45. Advanced Audio Distribution Profile (A2DP) [中文]

Accessories may implement the Advanced Audio Distribution Profile (A2DP) over Bluetooth (page 207) to receive audio from iOS devices and Mac computers.

The audio content from the device can be broadly classified into two categories:

- Audio content from music, video, or gaming applications.
- System-generated sounds for alerts and notifications.

A2DP is often implemented in speakers and headsets.

Accessories implementing A2DP shall satisfy all requirements stated in Bluetooth (page 207).

45.1 Bluetooth A2DP Specification [中文]

Accessories implementing the Advanced Audio Distribution Profile shall meet the requirements of the Bluetooth *Advanced Audio Distribution Profile* specification, Version 1.2.

45.1.1 AVDTP Transactions [中文]

Accessories shall respond to Audio/Video Distribution Transport Protocol (AVDTP) signaling transactions before the device's 5 second RTX_SIG_TIMER expires or the device will terminate the signaling channel. See Section 6.2 "Transaction Model" and section 6.4 "Signal Command Set" of the Bluetooth *Audio/Video Distribution Transport Protocol*, Version 1.3.

45.2 SubBand Codec (SBC) [中文]

The SBC Codec Specific Information Elements, defined in Section 4.3.2 of the A2DP specification, applicable to iOS devices and Mac computers are listed in Table 45-1 (page 198).

Table 45-1 SubBand Codec Information Elements for iOS devices and Mac computers

Element	Value
Sampling Frequency	44,100 Hz

2023-10-10 | Copyright © 2023 Apple Inc. All Rights Reserved.

Element	Value
Channel Mode	Stereo
Block Length	16
Subbands	8
Allocation Method	Loudness
Bitpool range	2 to 53. Accessories for iOS devices and Mac computers should support 53.

45.3 MPEG 2/4 AAC Codecs [中文]

Devices support the non-mandatory codec MPEG-2/4 AAC, as defined in Section 4.5 of the *Advanced Audio Distribution Profile* specification, Version 1.2. Accessories should use the AAC codec in addition to SBC, because AAC provides higher audio quality for a given bit rate.

> **Note:**
> The following specifications provide details of Apple's implementation of the MPEG-2/4 AAC codec. In case of conflicts, the A2DP specification governs.

The MPEG 2/4 AAC Codec Specific Information Elements, defined in Section 4.5 of the A2DP specification, applicable to devices are listed in Table 45-2 (page 199).

Table 45-2 MPEG-2/4 AAC Codec Information Elements for devices

Element	Value
Object Type	MPEG-2 AAC LC
Sampling Frequency	44,100 Hz
Channels	2
Bit rate	264,630 bps
VBR	0

AAC audio stream packets in devices have the structure shown in Table 45-3 (page 199).

Table 45-3 AAC audio packet for devices

L2CAP	AVDTP	MPEG-4 LATM	MPEG-4 AAC
Header	Header	AudioMuxElement	Audio Payload

2023-10-10 | Copyright © 2023 Apple Inc. All Rights Reserved.

The AAC Media Payload Format, as defined in Section 4.5.4 of the A2DP specification, is formatted using LATM, as defined in Section 4 of *IETF RFC 3016*. The following notes apply to the packet fields shown in Table 45-3 (page 199).

- The recommended L2CAP MTU value for each device's AAC streaming channel is 885 bytes.
- The AVDTP Header is shown as the RTP header in Figure 4 of RFC 3016, and is the header defined in Section 7.2.1 of the Bluetooth *Audio/Video Distribution Transport Protocol*, Version 1.2.
- The `AudioMuxElement` is the same as the RTP payload in RFC 3016. It is defined in Section 1.7.3, Table 1.41 in ISO/IEC 14496-3:2009, subpart 1. The `muxConfigPresent` argument to the `AudioMuxElement` is set to 1 (in-band mode), as recommended in Section 4.1 of RFC 3016. As recommended in Section 4.3 of RFC 3016, only one `AudioMuxElement` is put into each AVDTP packet.
- The audio payload is encoded using MPEG-4, as recommended in Section 4.5.4 of the A2DP specification.
- The accessory should support AAC-LC VBR and handle bit rate changes without audio gaps. Devices will vary AAC bit rate depending on the content.

45.4 Test Procedures [中文]

45.4.1 Audio Quality [中文]

Verify there are no audio quality issues in each of the following scenarios:

1. Stream music from the Apple Music app.
2. Stream music from a radio station within the Apple Music app.
3. Stream audio using the Apple Podcasts app.

45.4.2 Audio Switching [中文]

1. During A2DP streaming, switch audio back to device and switch back to accessory.
2. Verify audio was routed to the intended source, and audio quality was good switching back to Bluetooth.

45.4.3 HFP Interaction [中文]

1. Make incoming / outgoing call during A2DP.
2. Verify audio was suspended during the call and resumed after the call.

2023-10-10 | Copyright © 2023 Apple Inc. All Rights Reserved.

45.4.4 Siri [中文]

1. Trigger Siri during A2DP.
2. Verify audio resumed after the Siri session.

45.4.5 Video Playback [中文]

1. Stream A2DP while watching a video.
2. Verify audio / video synchronization and quality is good.

2023-10-10 | Copyright © 2023 Apple Inc. All Rights Reserved.

46. iAP2

[中文]

Accessories may use the iAP2 protocol to access advanced device features, such as:

- Communicating securely with third-party iOS/iPadOS apps using the External Accessory Protocol (page 142).
- Accessing the media library and retrieving album artwork using Media Library Access (page 169) and Now Playing Updates (page 171).
- Launching apps using App Launch (page 127).
- Discovering compatible apps using App Discovery (page 126).
- Helping users find compatible apps in the App Store using App Match (page 128).
- Providing GNSS location data using Location Information (page 147).
- Supporting connectivity with Out-of-Band Bluetooth Pairing (page 172) and Wi-Fi Information Sharing (page 190).

See the Accessory Interface Specification (page 23) for more information.

2023-10-10 | Copyright © 2023 Apple Inc. All Rights Reserved.

47. Human Interface Device (HID)

[中文]

Devices can accept input from and send output to Human Interface Device (HID) accessories, such as external keyboards, trackpads, mice, and game controllers. This capability is made available system-wide for all apps on the device as well as to support features built into iOS, iPadOS, and tvOS. If an accessory is designed to provide human input events to a specific third-party app, the accessory should use the External Accessory Protocol feature instead; see the Accessory Interface Specification (page 23) for more information.

The HID protocol can be implemented over:

- USB
- Bluetooth

47.1 Requirements

[中文]

Accessories supporting the HID protocol shall comply with the following requirements:

- Accessories shall only send HID reports for changes in physical or virtual control surfaces declared in the corresponding HID descriptor.
- Accessories shall not send a HID report if there has not been any change in the state of the corresponding physical or virtual control surface. For example, the accessory shall never generate a "Play/Pause" event without the user pressing a dedicated "Play/Pause" button.
- Each HID report shall contain the correct number of bytes as described in its corresponding HID descriptor.
- The accessory shall not anticipate or assume corresponding state changes in the device after sending HID reports.
- Unless otherwise specified:
  - The accessory shall be capable of generating and receiving all HID usages declared in its HID descriptor.
  - The accessory's declared HID usages shall map directly to physical or virtual control surfaces on a 1:1 basis. For example, a button labeled "Play/Pause" shall send a Play/Pause HID usage and not "Play" or "Pause" usages. Compound controls such as knobs, joysticks, and directional pads may be considered multiple control surfaces. For example, clockwise and counterclockwise rotation may map to separate HID usages.

2023-10-10 | Copyright © 2023 Apple Inc. All Rights Reserved.

- Physical or virtual control surfaces generating HID reports shall be labeled with appropriate iconography or text corresponding to the resulting device behavior. For example, a Play/Pause button shall be labeled with the text 'Play/Pause' or a Play/Pause icon.
- The accessory shall send one HID report in response to each direct user action on the corresponding physical or virtual control surface. For example:
  - When the user presses a button, one 'button pressed' HID report shall be sent to the device.
  - When the user releases the button, one 'button released' HID report shall be sent to the device.

47.1.1 Report Descriptor [中文]

When padding packets to align within a byte boundary, each Main item tag (Input, Output, or Feature) shall be marked constant. Padding bits should be set to 0.

When defining Variable type Input/Output fields, either:

- Report Count number shall correspond to the number of Usages specified.
- Report Size shall be 8 and the Report Count shall correspond to the size of a multi-byte blob.

47.1.2 USB [中文]

If implementing HID over USB, the accessory shall comply with the *Device Class Definition for Human Interface Devices 1.11*, see https://www.usb.org/hid.

47.2 Test Procedures [中文]

47.2.1 General [中文]

1. Verify the accessory generates and receives all HID usages declared in the component's HID descriptor.
2. Verify the accessory does not send a HID report if there has not been any change in the state of the control surfaces (that is, no polling of HID reports).
3. Verify if any accessory has physical or virtual control surfaces generating accessory HID usages, the controls are labeled with appropriate iconography or text corresponding to the resulting device behavior (for example, a Play/Pause button is labeled with the text "Play/Pause" or a Play/Pause icon).
4. Verify HID usages map to physical or virtual controls on a 1:1 basis (for example, Play button only sends Play usages, not Play/Pause).

2023-10-10 | Copyright © 2023 Apple Inc. All Rights Reserved.

5. Verify one accessory HID usage report is sent in response to each direct user action on the corresponding physical or virtual control surface. For example, when the user presses a button, one 'button pressed' usage report is sent, and a separate 'button released' usage report is sent when the user releases the button.

2023-10-10 | Copyright © 2023 Apple Inc. All Rights Reserved.

Transports

48. Bluetooth

[中文]

Accessories integrating Bluetooth technology shall comply with the requirements stated in this chapter.

Accessories shall support the *Bluetooth Core Specification* Version 2.1 + EDR or later.

48.1 Enhanced Data Rate

[中文]

The Enhanced Data Rate (EDR) feature introduced in the *Bluetooth 2.0* specification enables accessories to communicate more efficiently. Accessories shall use EDR for the following reasons:

- EDR provides higher data rates compared to Basic Data Rate (BDR).
- EDR communicates more efficiently, transferring more data bits in less time.
- EDR reduces power consumption per bit transferred.
- EDR improves coexistence with Wi-Fi and other Bluetooth accessories by using less airtime.
- EDR improves performance in multipoint configurations.

48.2 Adaptive Frequency Hopping

[中文]

Adaptive Frequency Hopping (AFH) introduced in the *Bluetooth 1.2* specification improves coexistence with Wi-Fi and other connected Bluetooth accessories. Accessories shall use AFH.

48.3 Sniff Mode for Low Power Consumption

[中文]

Minimizing power consumption is critical for all mobile devices, therefore accessories:

- Shall support and should request Bluetooth sniff mode.
- Shall accept sniff mode requests and support valid parameters from the Bluetooth specification.
- Shall support a sniff interval of 15 ms.
- Shall support sniff subrating.
- Shall not renegotiate sniff mode after it is established.
- Should use sniff mode values of:
  - Max Interval: 15 ms
  - Min Interval: 15 ms
  - Sniff Attempt: 1

2023-10-10 | Copyright © 2023 Apple Inc. All Rights Reserved.

- Sniff Timeout: 0

Accessories compatible with iOS devices and Mac computers should use sniff mode as often as possible, especially when there is little or no data being transmitted over the Bluetooth link. Sniff mode enables better antenna sharing with Wi-Fi, in addition to the power consumption advantages.

Sniff mode parameters are specific to the usage model and Bluetooth profile. Accessories should request sniff mode with appropriate parameters for specific usage models. If the accessory does not send a sniff mode request, the device may send a sniff mode request. When the device sends a sniff mode request, the accessory shall accept the request and parameters without negotiation.

If the accessory requests sniff mode, the accessory shall set the sniff interval to less than a third of the Bluetooth baseband Link Supervision Timeout (page 210), to make the Bluetooth link less susceptible to interference. To improve link robustness, the accessory should use a shorter sniff interval instead of multiple sniff attempts.

Links with a sniff interval of 1 second or more require a large correlation window, which has to be taken into account when calculating the number of sniff attempts. With sniff intervals shorter than 1 second, multiple sniff attempts can improve link robustness, but will increase power consumption.

48.4 Role and Topology Management [中文]

Accessories shall:

- Accept device Role Switch requests.
- Continue with the connection when the device rejects a request for Role Switch.

In a Bluetooth connection, there are two entities:

- The Central entity establishes a common clock and frequency hopping synchronization reference.
- The Peripheral entity synchronizes with the Central entity.

The Central entity can be synchronized with multiple Peripheral entities, thus forming a piconet. The Central entity can also be a Peripheral entity to another Central entity, creating a scatternet.

Accessories simultaneously connecting to multiple iOS devices or Mac computers shall support creating a scatternet.

Scatternets create complications since the device has to alternate between piconets, wasting valuable bandwidth. Efficiently managing network topology is important to maximize performance. The device may request a Role Switch, depending on its current topology, and the accessory shall accept the request. The device may also reject a Role Switch request due to topology concerns, as suboptimal topologies may degrade audio quality and the user experience.

2023-10-10 | Copyright © 2023 Apple Inc. All Rights Reserved.

Accessories should avoid requesting to be the Central entity, as in more frequently occurring scenarios the device needs to be the Central entity. Accessories insisting on being the Central entity may negatively impact the overall user experience.

48.5 Extended Inquiry Response [中文]

Accessories shall provide the following information in their Extended Inquiry Response packet:

- Local Name of the accessory (Complete or Shortened).
- TX Power Level.

During Bluetooth discovery, devices display accessories Friendly Names when available. Extended Inquiry Response enables accessories to proactively send their Local Name, and other information, as part of an Inquiry Response to increase the speed and efficiency of the discovery process.

Accessory Local Name should match the accessory's labeling and packaging without colons ':' or semi-colons ';'. Accessories may append up to six differentiating characters to their Local Name, such as the last few digits of a serial number or MAC address, if users are likely to encounter multiple accessories at the same time using the same name. If the accessory allows a user to customize the Local Name parameter, the accessory should provide a means to restore the factory default name.

48.6 Secure Simple Pairing [中文]

Accessories shall:

- Use Secure Simple Pairing.
- Use the Numerical Comparison method, if it has a display and input device supporting it.

Secure Simple Pairing greatly increases security, and is a mandatory security feature in the Bluetooth 2.1 specification. To protect against a 'man-in-the-middle' attack, the Numerical Comparison association model should be used whenever feasible. See Volume 1, Section 5.4 in the *Bluetooth Core Specification*, Version 2.1 + EDR.

48.7 Pairing Button [中文]

If the accessory has a labeled dedicated pairing control, it should use official Bluetooth branding. See https://www.bluetooth.com/develop-with-bluetooth/marketing-branding/.

2023-10-10 | Copyright © 2023 Apple Inc. All Rights Reserved.

48.8 Class of Device (CoD) [中文]

iOS devices and Mac computers use the accessory's Class of Device for UI purposes or to configure specific features. Accessories shall accurately set their Class of Device using the Bluetooth SIG defined Major Device Class and Minor Device Class. See Volume 3, Part C, Section 3.2.4 in the *Bluetooth Core Specification*, Version 5.0. For example, an audio/video accessory intended to operate in a vehicle should set Major Device Class to 'audio/video' and Minor Device Class to 'car-audio'.

48.9 Link Supervision Timeout [中文]

Link supervision timeout is used to detect link loss between an accessory and a device. An accessory shall set the link supervision timeout to 2 seconds or greater when it is the Central entity, to account for the unpredictable nature of RF signals, as well as the device's need to service other concurrent wireless systems.

48.10 Delay Reporting [中文]

As of iOS 8.2, devices support Delay Reporting commands as specified in the Bluetooth *Audio/Video Distribution Transport Protocol*, Version 1.3. Accessories should provide this information to improve audio/video synchronization for video playback. Accessories should not report a delay of more than 1000 ms, and should not update the delay more than 1 time per second.

48.11 Profiles [中文]

The Apple Bluetooth profiles knowledge base article https://support.apple.com/kb/ht3647 provides a complete list of the profiles supported by devices. Bluetooth specifications are the starting point for designing accessories compatible with these devices. The following sections provide additional information and requirements for common profiles to help accessory developers achieve superior results.

48.11.1 Device ID Profile (DID) [中文]

Accessories shall:

- Support Bluetooth Device ID Profile, Version 1.3 or later.

2023-10-10 | Copyright © 2023 Apple Inc. All Rights Reserved.

- Use their Company Identifier from the Assigned Numbers specification assigned by the Bluetooth SIG as the Vendor ID value (VID), see https://www.bluetooth.com/specifications/assigned-numbers/. Bluetooth HID Profile accessories may use a VID assigned by the USB Implementers Forum (USB-IF), see https://www.usb.org/getting-vendor-id, if the manufacturer does not have a Bluetooth SIG Company Identifier.
- Use its VID value for the end product manufacturer.
- Not use the Company ID assigned to Apple by the Bluetooth SIG, or the Vendor ID assigned to Apple by the USB Implementers Forum.
- Use the Vendor ID Source field to identify which organization assigned the value used in the Vendor ID field. See Section 5.6 of the *Bluetooth Device ID Profile Specification*.
- Use a ProductID value uniquely identifying the product.
- Use a Version value uniquely identifying the software version.

The Device ID record enables devices to identify the implementation of the remote accessory, which is used to bridge alternate interpretations of the Bluetooth specification when communicating with a remote accessory. It is important the information in the Device ID record uniquely identify the implementation in use.

In the case of Bluetooth car kit devices, the same car kit may be present in different car models. Ideally, the two car kits should have different ProductIDs. However, it is acceptable for them to have the same ProductID as long as they have identical hardware, software, and features. If the implementations differ at all, they should have different ProductIDs. The accessory can also use a secondary Device ID record to uniquely identify the product ID, or model number.

48.11.2 Service Discovery Protocol (SDP) [中文]

To facilitate caching Service Discovery Protocol service records, accessories shall:

- Support the ServiceDiscoveryServer Service Class.
- Support the ServiceDatabaseState attribute.
  - Attribute's value shall change whenever any SDP service record or attributes within a record are added, removed, or modified.
  - Attribute's value shall not change based on RFCOMM channel protocol parameters. Devices query these values separately at connection time.

48.11.3 Hands-Free Profile (HFP) [中文]

Accessories supporting Hands-Free Profile should meet the requirements of the *Bluetooth Hands-Free Profile Specification*, Version 1.5 or later. Additional Apple requirements are specified in this section.

Remote accessories can use the Bluetooth *Hands-Free Profile* for phone communications. To achieve the best user experience, the remote accessory should support the following features, which are optional in the Bluetooth specification.

2023-10-10 | Copyright © 2023 Apple Inc. All Rights Reserved.

48.11.3.1 Remote Audio Volume Control [中文]

Accessories supporting HFP should:

- Support Remote Audio Volume Control, so speaker volume on the hands-free accessory can be controlled from the device as described in Section 4.28 in the *Bluetooth Hands-Free Profile Specification*, Version 1.5.
- Set the Remote volume control bit in the Supported Features bitmap sent with the `AT+BRSF=` command.

In some situations it is easier for the user to control the output volume through the device, instead of directly on the remote accessory. For example, a car passenger (or if the car is parked, the driver) could use the volume slider on the phone to control audio volume. Volume control synchronization is outlined in Section 4.48.2 in the *Bluetooth Hands-Free Profile Specification*, Version 1.5.

48.11.3.2 Indicator Event Reporting [中文]

Accessories supporting HFP should use Indicator Event Reporting, and not perform repetitive status polling.

iOS devices and Mac computers support all mandatory and optional indicators specified in HFP version 1.5 (`service`, `call`, `callsetup`, `callheld`, `signal`, `roam`, `battchg`). To minimize unnecessary status polling using the `AT+CIND?` command, the remote accessory should enable Indicator Event Reporting by sending an `AT+CMER` command. The device will then send a `+CIEV` event when there is a status change. The remote accessory should request initial status using the `AT+CIND=?` and `AT+CIND?` commands, according to the HFP specification.

48.11.3.3 Voice Recognition Activation [中文]

Accessories supporting HFP shall:

- Support Voice Recognition Activation, both AG and HF, initiated as described in Section 4.25 in the *Bluetooth Hands-Free Profile Specification*, Version 1.5.
- Set the Voice Recognition Activation bit in the "SupportedFeatures" bitmap sent with the `AT+BRSF=` command.

iOS devices and Mac computers support voice recognition initiated by remote (Hands-Free) accessories, and iOS (Audio Gateway) accessories.

48.11.3.4 Echo Cancellation and Noise Reduction [中文]

When echo cancellation and noise reduction are performed locally on a hands-free accessory, the accessory should turn off echo cancellation and noise reduction on the device by sending an `AT+NREC` command, as described in Section 4.24 in the *Bluetooth Hands-Free Profile Specification*, Version 1.5.

2023-10-10 | Copyright © 2023 Apple Inc. All Rights Reserved.

iOS devices and Mac computers support echo cancellation and noise reduction by default. If a hands-free accessory performs echo cancellation and noise reduction, the accessory needs to turn these features off on the device (the Audio Gateway), to avoid unnecessary audio quality degradation due to duplicate audio processing.

48.11.3.5 In-Band Ringing [中文]

Accessories supporting HFP should also support In-Band Ringing as specified in Section 4.13.1 in the *Bluetooth Hands-Free Profile Specification*, Version 1.5. If the user sets a ring tone on the device, the same ring tone should sound on the hands-free accessory.

48.11.3.6 Synchronous Connection [中文]

Accessories supporting HFP shall:

- Support eSCO parameter set S2 and S3 and accept requests for these settings. See Section 5.6 of the *Bluetooth Hands-Free Profile Specification* version 1.5.
- Request eSCO parameter set S2 or S3 when setting up a Synchronous Connection. eSCO parameter set S1 should not be requested.
- Render audio within 40 ms after the SCO/eSCO connection has been set up.

eSCO packet types offer packet retransmission, whereas traditional SCO packets are not retransmitted. This improves audio quality and the user experience. eSCO packet types 2-EV3 and 3-EV3 offer a greater time interval between packets, which can improve Wi-Fi performance and allow time for other concurrent Bluetooth connections to send data.

Apple strongly recommends the use of 2-EV3 and 3-EV3 packets for SCO connections. Using HV3 packets is highly discouraged. HV3 packets require more link time and do not allow audio packet retransmission, which impacts audio performance in the presence of RF interference.

48.11.3.7 Wide Band Speech [中文]

Accessories supporting HFP should support Wide Band Speech, as described in Section 5.7.4 of the Bluetooth *Hands-Free Profile Specification*, Version 1.6. If Wide Band Speech is supported, the accessory should support the T2 link parameter settings.

Devices running iOS 5 or later support Wide Band Speech. If both the device and the accessory support Wide Band Speech, the device will use it for eSCO connection scenarios such as cellular calls, FaceTime, and Siri.

48.11.4 Message Access Profile (MAP) [中文]

Accessories supporting Message Access Profile:

2023-10-10 | Copyright © 2023 Apple Inc. All Rights Reserved.

- Shall support Message Notification, as described in Section 4.1 of the *Bluetooth Message Access Profile Specification*, Version 1.1.
- Shall register for notifications immediately after the connection is established, as described in Section 4.5 in the *Message Access Profile Specification*, Version 1.1.

Devices running iOS 13.0 or later support MAP 1.1.

48.11.5 Audio/Video Remote Control Profile (AVRCP) [中文]

Accessories supporting Audio/Video Remote Control Profile should meet the requirements of the *Bluetooth Audio/Video Remote Control Profile Specification*, Version 1.4. Additional Apple requirements are specified in this section.

48.11.5.1 Supported Operations [中文]

iOS devices and Mac computers support the following operation_IDs in passthrough commands:

- Play
- Stop
- Pause
- Fast Forward
- Rewind
- Forward
- Backward

48.11.5.2 Repeat and Shuffle Modes [中文]

Every device in the role of an AVRCP target supports Repeat and Shuffle modes. An AVRCP controller may use `SetPlayerApplicationSettingValue` to set a value on the device and `GetPlayerApplicationSettingValue` to read a value, as described in Sections 6.5.4 and 6.4.3 of the *Bluetooth Audio/Video Remote Control Profile Specification*, Version 1.4.

48.11.5.3 Notifications [中文]

Accessories supporting AVRCP:

- Shall register for notifications.
- Shall not perform repetitive device status polling.

Every device in the role of an AVRCP Target supports registering for notifications, as described in Section 6.7 of the *Bluetooth Audio/Video Remote Control Profile Specification*, Version 1.4. The commands `RegisterNotification` and `GetPlayStatus` are supported for these notifications:

- EVENT_PLAYBACK_STATUS_CHANGED
- EVENT_TRACK_CHANGED

2023-10-10 | Copyright © 2023 Apple Inc. All Rights Reserved.

- EVENT_NOW_PLAYING_CONTENT_CHANGED
- EVENT_AVAILABLE_PLAYERS_CHANGED
- EVENT_ADDRESSED_PLAYER_CHANGED
- EVENT_VOLUME_CHANGED

48.11.5.4 Play/Pause Button [中文]

Accessories supporting AVRCP implementing a Play/Pause control surface shall confirm the playback status of the device using AVRCP Notifications (page 214), before sending a Play or Pause command. See Supported Operations (page 214). Specifically:

- If a device notifies the accessory it is paused, pressing the accessory's Play/Pause control surface should send a Play command.
- If a device notifies the accessory it is playing, pressing the accessory's Play/Pause control surface should send a Pause command.
- The accessory should not infer device playback status based on the number of times the Play/Pause control surface has been pressed.

48.11.5.5 Volume Handling [中文]

Accessories supporting AVRCP should support Absolute Volume, as described in Section 6.13 of the *Bluetooth Audio/Video Remote Control Profile Specification*, Version 1.4.

Every device in the role of AVRCP Controller supports volume handling.

48.11.5.6 Browsing [中文]

Accessories supporting Browsing (in controller role) as part of AVRCP:

- Shall not try to index or cache the entire library upon connection. The device may contain tens of thousands of media items, and each may be present multiple times in the hierarchy.
- Shall not fetch all items when browsing a folder; only fetch items displayed to the user. The accessory may prefetch a few items to improve the responsiveness of the user interface.
- Shall not reorder items (for example, alphabetically).
- Shall not assume UIDs to be statically defined, especially in the root folder. The ordering and UIDs of folders and items may change at any point in future releases.
- Shall send the `SetBrowsedPlayer` command after receiving an EVENT_UIDS_CHANGED notification.
- Shall not assume the UID passed to the `PlayItem` command will result in the media player playing the UID.

2023-10-10 | Copyright © 2023 Apple Inc. All Rights Reserved.

Currently only the built-in Music app supports browsing. When switching between players, an EVENT_AVAILABLE_PLAYERS_CHANGED notification, and an EVENT_ADDRESSED_PLAYER_CHANGED notification will be generated. The UI needs to look at the feature bit mask of the listed player to determine whether browsing is currently available.

All devices running iOS 6.0 or later support AVRCP Browsing.

48.11.5.7 iOS App-Provided Metadata [中文]

An audio app running on a device may use the iOS Media Player Framework to provide metadata about the current audio stream to the accessory using AVRCP. Requirements and usage for these messages may be found in the `MPNowPlayingInfoCenter` class in Apple Media Player Framework documentation.

48.11.6 Advanced Audio Distribution Profile (A2DP) [中文]

See Advanced Audio Distribution Profile (A2DP) (page 198).

48.12 Audio Routing [中文]

Accessories can differentiate between various audio content provided by a device, and determine playback behavior.

An accessory can receive audio data from the device using either of two Bluetooth profiles:

- HFP using eSCO channel.
- A2DP using ACL channel.

The device determines which channel to use, depending on how the audio content is used. An audio path created for two-way communication (for example, phone calls or FaceTime) always uses the HFP (eSCO) route for sending audio data. Music and similar content uses the A2DP channel route. In the absence of a defined route, audio playback defaults to the device.

48.12.1 Audio Data Received using HFP Profile [中文]

Most of the audio content sent using HFP (eSCO) route requires two-way communication. Scenarios where HFP (eSCO) is used include, but are not limited to: cellular calls, FaceTime, and voice mail.

The accessory speaker and microphone should be dedicated to the HFP (eSCO) route, and not mixed/muxed with any other audio sources.

2023-10-10 | Copyright © 2023 Apple Inc. All Rights Reserved.

48.12.2 Audio Data Received using A2DP Profile [中文]

Audio content transferred using A2DP profiles can be broadly classified into two categories:

- Audio content from music, video, or game-like applications.
- System-generated sounds used for alerts and notifications.

48.12.2.1 Differentiating Audio Content from System Sounds [中文]

Music-like content can be differentiated from system sounds by adding support for Audio/Video Remote Control Profile (AVRCP) version 1.3 or later. The AVRCP profile allows an accessory to be aware of the audio playback device state, using notifications. See Audio/Video Remote Control Profile (AVRCP) (page 214).

When a device initiates audio playback over an A2DP channel for playing music content, an AVRCP notification EVENT_PLAYBACK_STATUS_CHANGED is sent to indicate playback status has changed to the play state. See Section 6.7.2 of the *Audio/Video Remote Control Profile Specification*, Version 1.4. This indicates audio data using the A2DP profile contains music. When a device initiates audio playback over an A2DP channel for playing system sounds, no AVRCP notifications are sent.

Figure 48-1 (page 217) and Figure 48-2 (page 218) show the difference between notifications for music playback, and system sounds.

Figure 48-1 Initiate Audio Playback (for example, music)

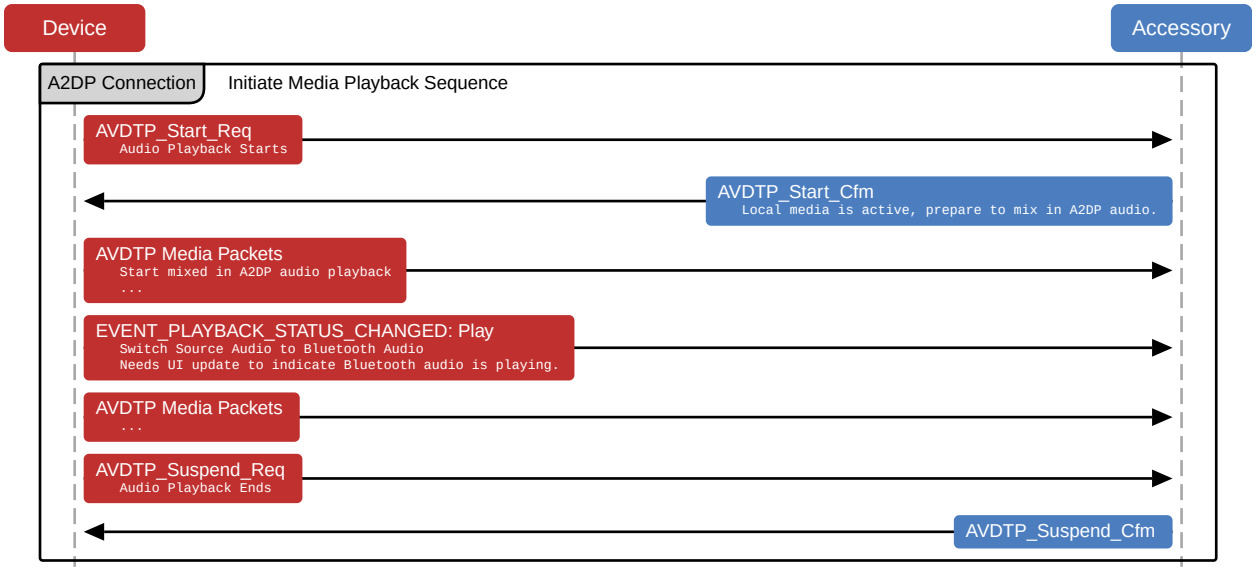

2023-10-10 | Copyright © 2023 Apple Inc. All Rights Reserved.

Figure 48-2 Initiate System Sound (such as, turn-by-turn directions)

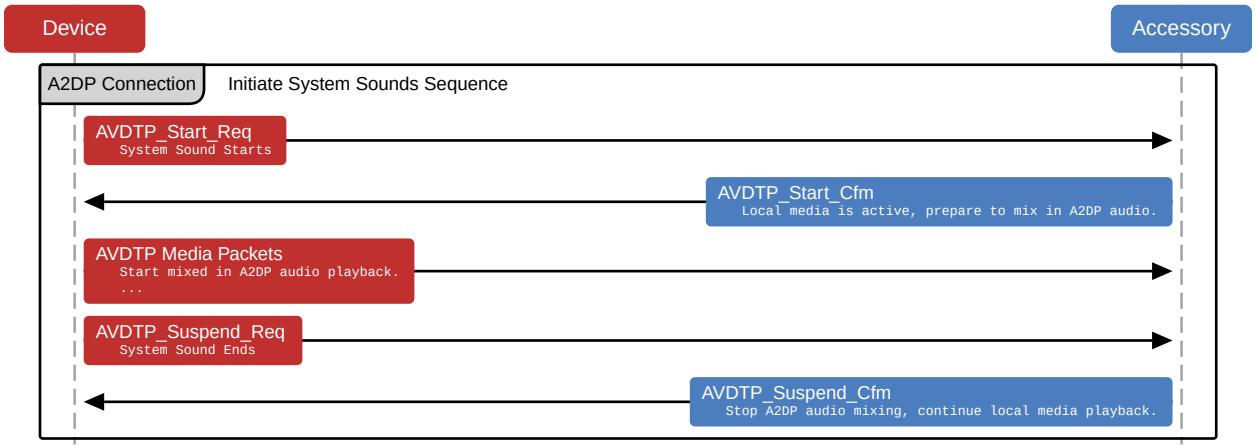

48.12.2.2 Expected Audio Routing Behavior for A2DP [中文]

The accessory should tune its audio routing behavior based on audio content over the A2DP channel.

If audio data contains music, accessory speakers are expected to be dedicated to audio data using the Bluetooth link, and any other audio playback is paused. If audio data contains system sounds, it is expected the accessory can render audio as desired. If the accessory is playing audio from a different source, it is not necessary to pause existing audio playback on the device, and system sound data can be mixed with the existing track for playback.

48.13 HID [中文]

When implementing HID over Bluetooth, the accessory:

- Should support Bluetooth HID Profile 1.1.
- Should support Sniff Mode for Low Power Consumption (page 207).
- Should use the following parameters in SDP for sniff subrating:
  - HIDSSRHostMaxLatency - 450 ms (720 slots)
  - HIDSSRHostMinTimeout - 45 ms (72 slots)
- Should use a typical report packet of 22 bytes or less. This is small enough to fit into a DH1 packet with L2CAP and HID header.

2023-10-10 | Copyright © 2023 Apple Inc. All Rights Reserved.

49. Bluetooth Low Energy (BLE) [中文]

The *Bluetooth 4.0* specification introduces Bluetooth Low Energy (BLE), a wireless technology targeted for accessories with limited battery resources. If Bluetooth Low Energy is supported, the accessory should follow the guidelines in this section.

49.1 Role [中文]

The accessory should implement either the Peripheral role as defined in the *Bluetooth 4.0* specification, Volume 3, Part C, Section 2.2.2.3 or the Broadcaster role, as defined in Section 2.2.2.1.

49.2 Advertising Channels [中文]

The accessory should advertise on all three advertising channels (37, 38, and 39) at each advertising event. See the *Bluetooth 4.0* specification, Volume 6, Part B, Section 4.4.2.1.

49.3 Advertising PDU [中文]

The accessory should use one of the following advertising PDUs:

- ADV_IND
- ADV_NOCONN_IND
- ADV_SCAN_IND

ADV_DIRECT_IND should not be used. See the *Bluetooth 4.0* specification, Volume 6, Part B, Section 2.3.1.

49.4 Advertising Data [中文]

The advertising data sent by the accessory should contain at least the following information as described in the *Bluetooth Core Specification Supplement*, Part A:

- Flags
- TX Power Level

2023-10-10 | Copyright © 2023 Apple Inc. All Rights Reserved.

- Local Name
- Services

The Local Name should match the accessory's markings and packaging and not contain a colon ':' or semi-colon ';'.

The accessory may put the Local Name and the TX Power Level data in the SCAN_RSP PDU if, for example, it needs to reduce power consumption or not all of the advertising data fit into the advertising PDU. Depending on its state, the device may not always perform active scanning.

The primary services should always be advertised in the advertising PDU. Secondary services should not be advertised. Services not significant to the primary use case of the accessory may be omitted if space is limited in the Advertising PDU.

The advertising data and the scan response data in the SCAN_RSP PDU should comply with the formatting guidelines in the *Bluetooth 4.0* specification, Volume 3, Part C, Section 18: it starts with a length field, followed by AD Type and AD Data.

49.5 Advertising Interval [中文]

The accessory should first use the recommended advertising interval of 20 ms for at least 30 seconds.

If it is not discovered within the initial 30 seconds, Apple recommends using one of the following longer intervals to increase chances of discovery by the device:

- 152.5 ms
- 211.25 ms
- 318.75 ms
- 417.5 ms
- 546.25 ms
- 760 ms
- 852.5 ms
- 1022.5 ms
- 1285 ms

> **Note:**
> Longer advertising intervals usually result in longer discovery and connect times, but may lower accessory power consumption.

2023-10-10 | Copyright © 2023 Apple Inc. All Rights Reserved.

49.6 Connection Parameters [中文]

If both the Central and Peripheral support the Connection Parameters Request procedure, then either shall use the procedure. The device will not read or use the parameters in the Peripheral Preferred Connection Parameters characteristic. See the *Bluetooth 5.3 Specification* Volume 6, Part B, Section 5.1.1 Connection Update procedure for details.

Connection parameter requests may be rejected if they do not meet the guidelines in this section.

General connection parameter request guidelines:

- Peripheral Latency ≤ 30 connection intervals.
- Supervision Timeout from 6 seconds to 18 seconds.
- Interval Min ≥ 15 ms.
- Interval Min is a multiple of 15 ms.
- One of the following:
  - Interval Max at least 15 ms greater than Interval Min.
  - Interval Max and Interval Min are both 15 ms.
- Interval Max * (Peripheral Latency + 1) of 6 seconds or less.
- Supervision Timeout greater than Interval Max * (Peripheral Latency + 1) * 3.

If Bluetooth Low Energy HID is one of the connected services of an accessory, a connection interval down to 11.25 ms may be accepted by some devices.

> **Note:**
> When Interval Max and Interval Min are both 15 ms, some devices (such as Apple Watch) will offer a 30 ms interval to better balance power and performance constraints.

Apple Watch connection parameter request guidelines:

- Interval Min ≥ 30 ms.
- Interval Min is a multiple of 30 ms.
- One of the following:
  - Interval Max at least 30 ms greater than Interval Min.
  - Interval Max and Interval Min are both 30 ms.

49.7 Data Packet Length Extension [中文]

Data Packet Length Extension increases the maximum data length from 27 to 251. Using larger per-packet data lengths improves radio efficiency, greatly increasing application data rates and boosting battery life. See the *Bluetooth 5.0* specification, Volume 6, Part B, Section 4.6.6 for details.

2023-10-10 | Copyright © 2023 Apple Inc. All Rights Reserved.

Figure 49-1 Data Packet Length Extension

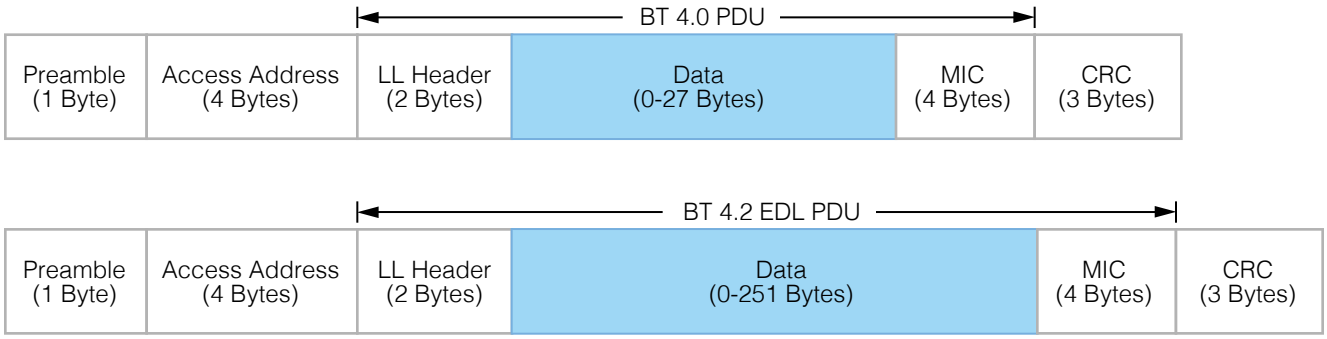

Accessories should support Data Packet Length Extension for best performance with devices.

iOS devices and Mac computers operating as the Central will negotiate optimal data packet lengths based on various factors, such as connection event length, system topology, and protocol.

49.8 Privacy [中文]

The accessory should be able to resolve a Resolvable Private Address in all situations. Due to privacy concerns, the device will use a Random Device Address as defined in the *Bluetooth 4.0* specification, Volume 3, Part C, Section 10.8.

49.9 Permissions [中文]

The accessory should not require special permissions, such as pairing, authentication, or encryption to discover services and characteristics. It may require special permissions only for access to a characteristic value or a descriptor value. See the *Bluetooth 4.0* specification, Volume 3, Part G, Section 8.1, fifth paragraph.

49.10 Pairing [中文]

The accessory should not request pairing until an ATT request is rejected using the Insufficient Authentication error code. See the *Bluetooth 4.0* specification, Volume 3, Part F, Section 4 for details.

If, for security reasons, the accessory requires a bonded relationship with the Central, the Peripheral should reject the ATT request using the Insufficient Authentication error code, as appropriate. As a result, the device may proceed with the necessary security procedures.

2023-10-10 | Copyright © 2023 Apple Inc. All Rights Reserved.

Similarly, if the device acts as a Central and a GATT server, it may reject an ATT request using the Insufficient Authentication error code. The accessory should initiate the security procedure for pairing in response.

Pairing may require user authorization depending on device. Once an accessory is paired with a device, the accessory shall retain the distributed keys of both central and peripheral for future use. If the pairing is no longer required, the accessory shall delete both sets of keys.

49.11 MTU Size [中文]

An accessory supporting packet length extension shall perform the packet length update procedure before performing the Exchange MTU Request handshake, see Data Packet Length Extension (page 221).

Devices will support and request an MTU size larger than the default during the Exchange MTU Request handshake. See the *Bluetooth 4.0* specification, Volume 3, Part F, Section 3.2.8.

When operating as ATT client, the device will request the optimal MTU size based on factors such as the Bluetooth topology, connection event length, maximum data length, and protocol (GATT or connection-oriented L2CAP).

An accessory operating as ATT server should select an MTU equal to or greater than the device's MTU request.

49.12 Services [中文]

49.12.1 Generic Access Profile Service [中文]

The accessory should implement the Device Name characteristic per the *Bluetooth 4.0* specification, Volume 3, Part C, Section 12.1. The Device Name characteristic should be writeable.

49.12.2 Generic Attribute Profile Service [中文]

The accessory shall implement the Service Changed characteristic only if the accessory has the ability to change its services during its lifetime.

The device may use the Service Changed characteristic to determine if it can rely on previously read (cached) information from the device. See the *Bluetooth 4.0* specification, Volume 3, Part G, Section 7.1.

2023-10-10 | Copyright © 2023 Apple Inc. All Rights Reserved.

49.12.3 Device Information Service [中文]

The accessory shall implement the Device Information Service. The service UUID for this service should not be advertised in the Advertising Data. The following characteristics should be supported:

- Manufacturer Name String (26 characters maximum).
- Model Number String (26 characters maximum).
- Firmware Revision String
- Software Revision String

49.12.4 Available Services [中文]

With iOS 7.0, any device makes Battery Service, Current Time Service and Apple Notification Center Service (ANCS) available to an accessory. The Current Time Service supports the current time and local time information characteristics. The service does not provide an "Adjust Reason" when the current time changes. ANCS uses `7905F431-B5CE-4E99-A40F-4B1E122D00D0` as its UUID.

These services are not guaranteed to be available immediately after connection and the accessory shall support Characteristic Value Indication of the Service Changed characteristic (see *Bluetooth 4.0* specification, Volume 3, Part G, Section 7.1) to be notified when the services become available. The device will maintain a connection to an accessory as long as it is paired and uses one of the available services.

49.13 GATT Server [中文]

With iOS 6.0, applications may contribute services and characteristics to the GATT server the device makes available to the accessory. The recommendations in this section apply to the accessory in this case.

The following services are implemented internally by iOS and shall not be published by third-party iOS applications:

- Generic Attribute Profile Service
- Generic Access Profile Service
- Bluetooth Low Energy HID Service
- Battery Service
- Current Time Service
- Apple Notification Center Service

The device implements the GAP Service Changed characteristic, because the database contents can change at any time. The accessory should therefore support the Characteristic Value Indication of this characteristic and, upon receiving indications, invalidate its database cache accordingly. See the *Bluetooth 4.0* specification, Volume 3, Part G, Section 7.1.

2023-10-10 | Copyright © 2023 Apple Inc. All Rights Reserved.

The accessory should minimize the use of ATT/GATT requests and commands and only send what is necessary. For example, do not use GATT Discover All Services when the accessory is looking for specific services. Use Discover Primary Service By Service UUID instead. Less airtime equals less power consumption and better performance for both the accessory and the device.

When third-party iOS applications discover services on the accessory, the following services are used internally by iOS and are filtered out from the list of discovered services:

- Generic Attribute Profile Service
- Generic Access Profile Service
- Bluetooth Low Energy HID Service
- Apple Notification Center Service

The accessory should be robust enough to handle any error gracefully. Pairing and Characteristic Value reads/writes may fail if the application owning the service is not in the foreground and is not entitled to run in the background.

If an ATT Prepare Write Request is used, all queued attributes are contained within the same GATT Service.

2023-10-10 | Copyright © 2023 Apple Inc. All Rights Reserved.

Modules

50. Apple USB-C Analog Headset Module [中文]

Note:
Developer Preview

The following chapter is a preview and is not intended for use in the development of accessories. Although this content has been reviewed for accuracy, it is not final. Apple is supplying this content to help accessory developers plan for the adoption of the accessory interface features described herein. This information is subject to change.

The Apple USB-C Analog Headset Module (C125) may be used to create Headsets (page 78) supporting Apple Music Lossless and Hi-Res Lossless.

Figure 50-1 USB-C Analog Headset Module (C125)

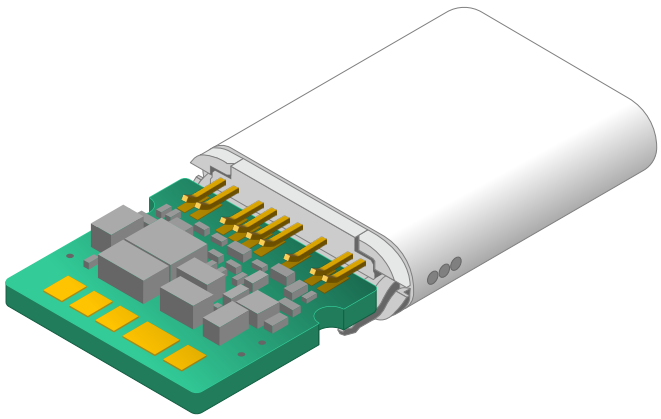

50.1 Overview [中文]

C125 is a USB Audio Device Class 2.0 compliant codec with an integrated USB-C plug.

C125 supports:

- 16-bit and 24-bit samples.

2023-10-10 | Copyright © 2023 Apple Inc. All Rights Reserved.

- 44.1 kHz, 48 kHz mono microphone input.
- 44.1 kHz, 48 kHz, and 96 kHz (and optionally 192 kHz and 384 kHz) stereo headphone-level output.
- Volume Up, Volume Down, and Center buttons.

C125 shall not be used for USB-C to 3.5 mm headset jack adapters.

50.1.1 Additional Specifications & Support [中文]

Additional software and support for C125 is available from Cirrus Logic, Inc. Get started at https://www.cirrus.com/support/.

50.2 Mechanical [中文]

C125 has the following mechanical characteristics:

- Integrated USB-C connector.
- Not encapsulated.
- -20 °C to 65 °C working temperature range.

See C125 Dimensions (page 230) for dimensional drawing.

Unless otherwise specified in this chapter, the accessory shall meet the requirements for USB-C connector integration, see Mechanical (page 240).

C125 headsets shall:

- Encapsulate both sides of C125.
- Protect the C125 electronic components with a SUS shield.
- Laser weld the SUS shield to the C125 ground ring.

50.3 Pad Assignments [中文]

Figure 50-2 (page 229) and Table 50-1 (page 229) detail the layout, names, description, and assignments of the C125 pads.

2023-10-10 | Copyright © 2023 Apple Inc. All Rights Reserved.

Figure 50-2 C125 pads

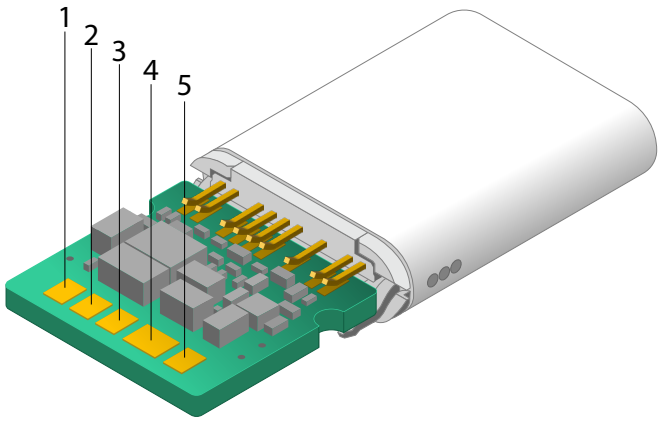

Table 50-1 C125 pad assignments

Pad	Name	Assignments
1	Left Driver	Left Driver
2	Microphone Bias	Microphone Bias
3	Reserved	NC
4	Ground	Right Return, Left Return, Microphone Return
5	Right Driver	Right Driver

50.4 Electrical [中文]

C125 headsets shall incorporate the Apple Headset Remote and Microphone Transmitter (page 232).

The C125 shield may be treated as an electrical ground.

2023-10-10 | Copyright © 2023 Apple Inc. All Rights Reserved.

50.5 C125 Dimensions

[中文]

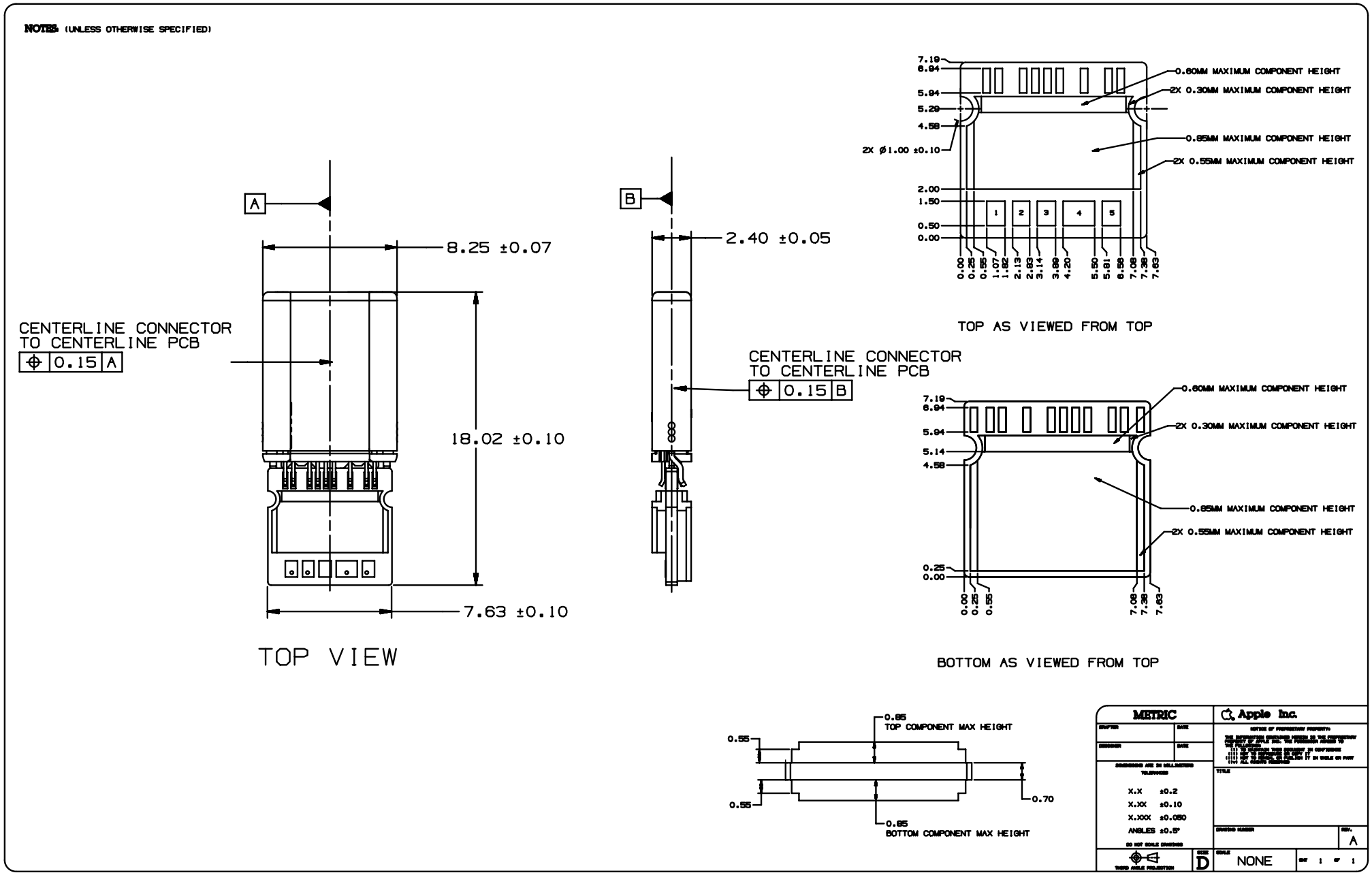

Copyright © 2023 Apple Inc. All Rights Reserved.

Components

51. Apple Headset Remote and Microphone Transmitter [中文]

Note:
Developer Preview

The following chapter is a preview and is not intended for use in the development of accessories. Although this content has been reviewed for accuracy, it is not final. Apple is supplying this content to help accessory developers plan for the adoption of the accessory interface features described herein. This information is subject to change.

Devices can receive button press information from Headsets (page 78) incorporating the Apple Headset Remote and Microphone Transmitter using the Apple USB-C Analog Headset Module (page 227).

51.1 Requirements [中文]

Accessories implementing the Headset Remote and Microphone Transmitter shall comply with the following requirements:

- The remote microphone shall be located 120-160 mm from the center of a headset driver when worn by the user.
- There shall be six wires originating from the plug attaching the device to the headset, corresponding to the following signals:
  - Right Driver
  - Right Return
  - Left Driver
  - Left Return
  - Microphone Bias
  - Microphone Return
- All signals shall be run separately to their respective components.
- There shall be three physical remote buttons for Volume Up, Volume Down, and Center button functions.

Headsets integrating the Headset Remote and Microphone Transmitter shall integrate a MEMS analog microphone.

Headset drivers shall have:

2023-10-10 | Copyright © 2023 Apple Inc. All Rights Reserved.

- A minimum load impedance of 16 Ω.
- A maximum load capacitance of 150 pF.

Headsets shall implement one of the following configurations. The microphone and remote buttons may be located on either the left or right side of the headset.

2023-10-10 | Copyright © 2023 Apple Inc. All Rights Reserved.

Figure 51-1 USB-C Analog Headset Module (C125) Example A

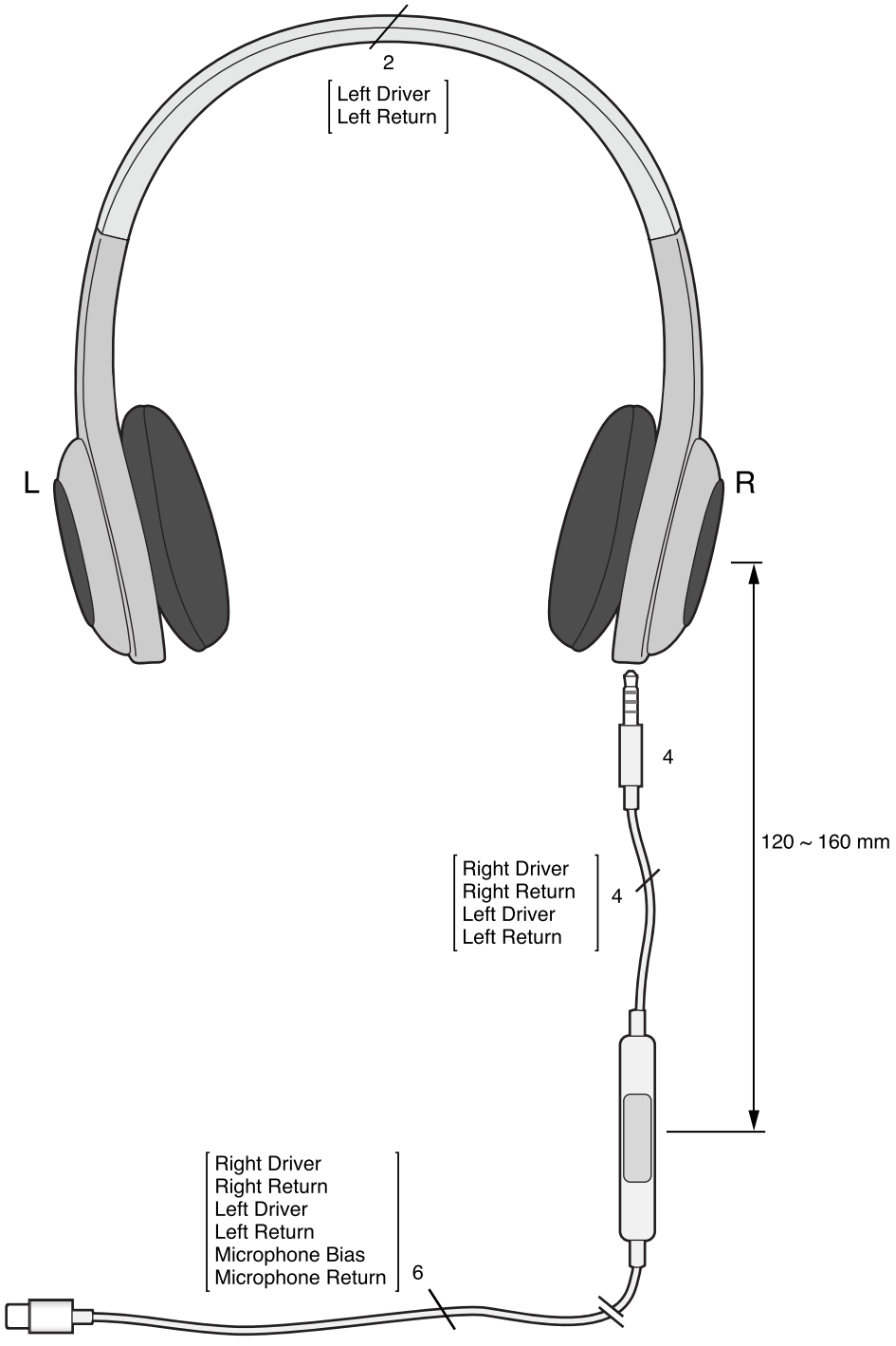

2023-10-10 | Copyright © 2023 Apple Inc. All Rights Reserved.

Figure 51-2 USB-C Analog Headset Module (C125) Example B

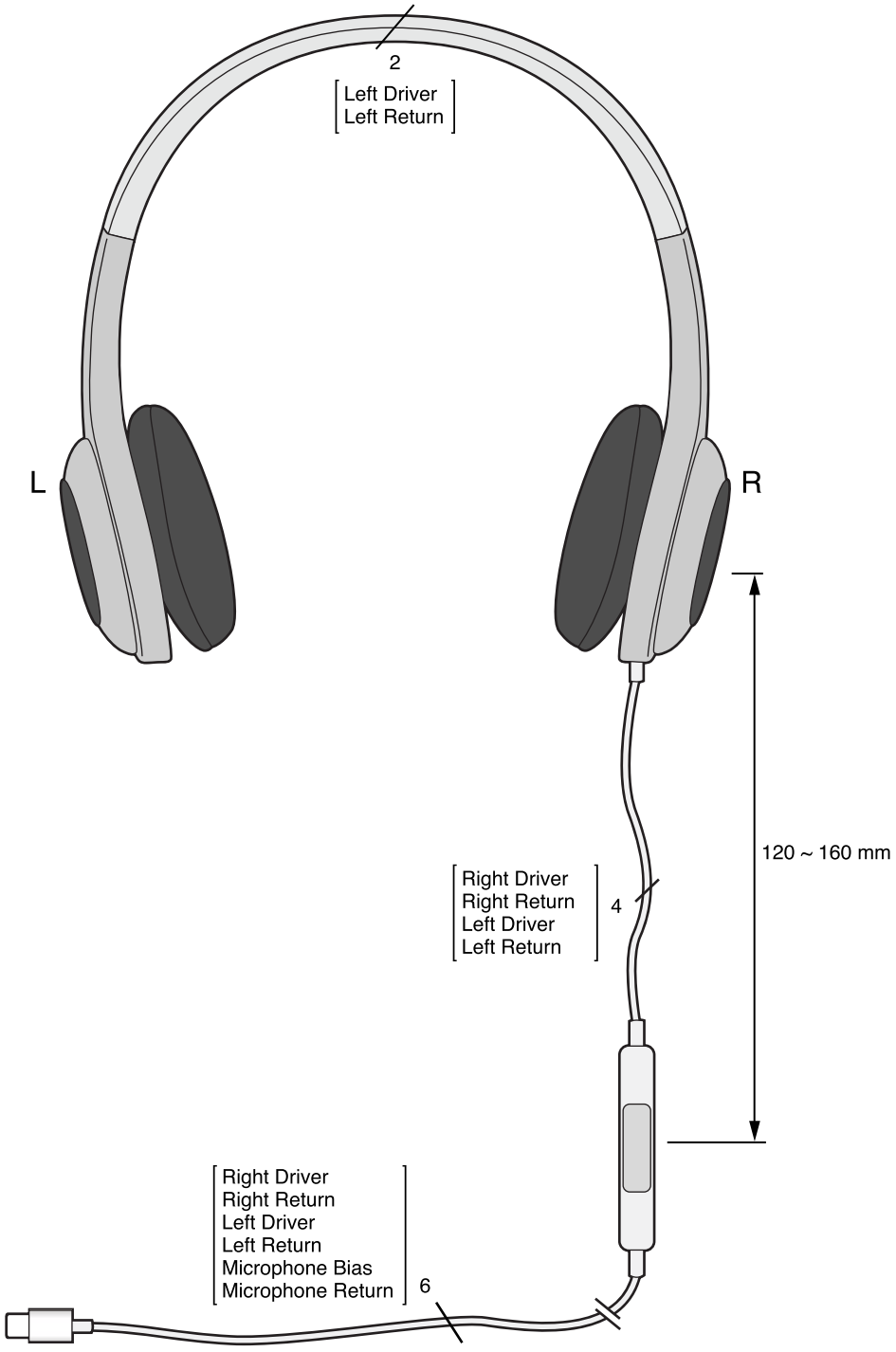

2023-10-10 | Copyright © 2023 Apple Inc. All Rights Reserved.

Figure 51-3 USB-C Analog Headset Module (C125) Example C

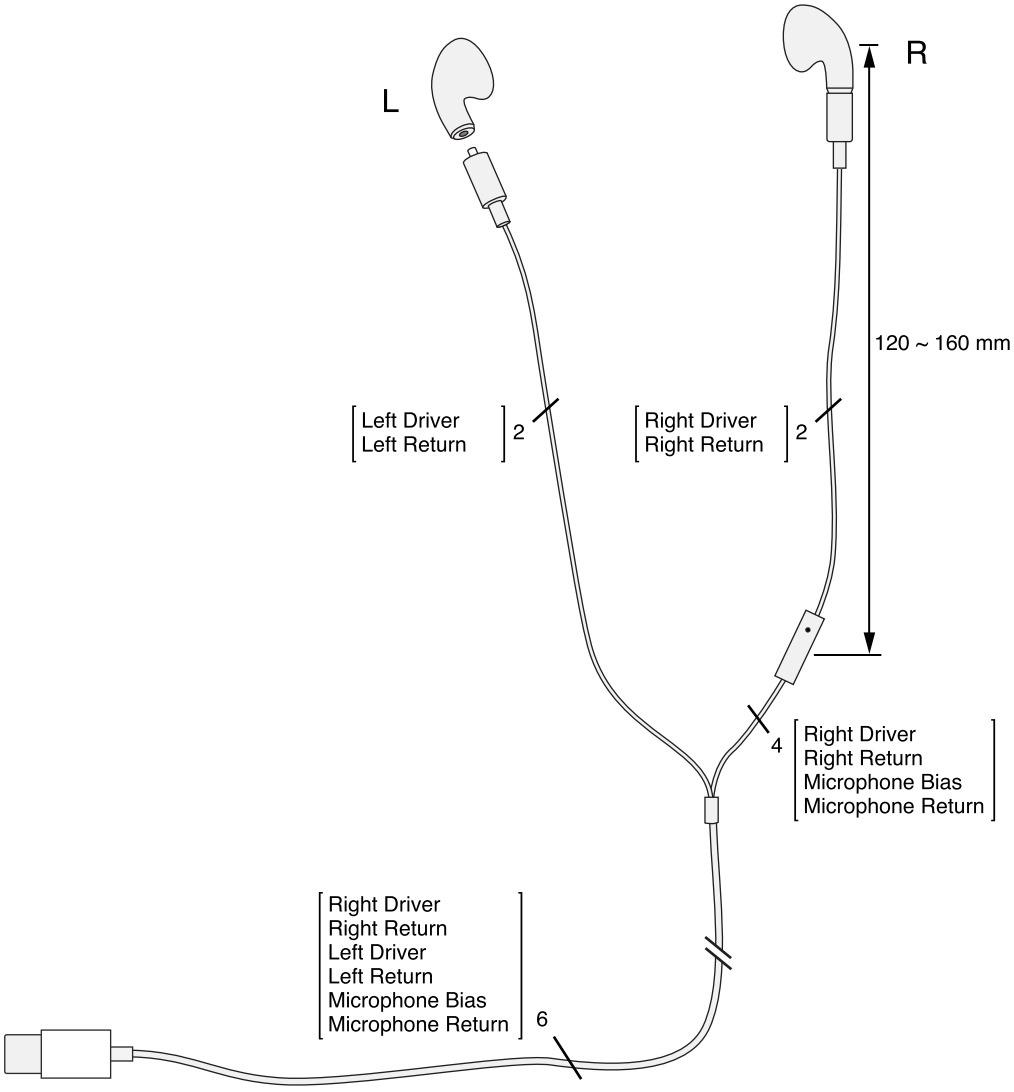

2023-10-10 | Copyright © 2023 Apple Inc. All Rights Reserved.

Figure 51-4 USB-C Analog Headset Module (C125) Example D

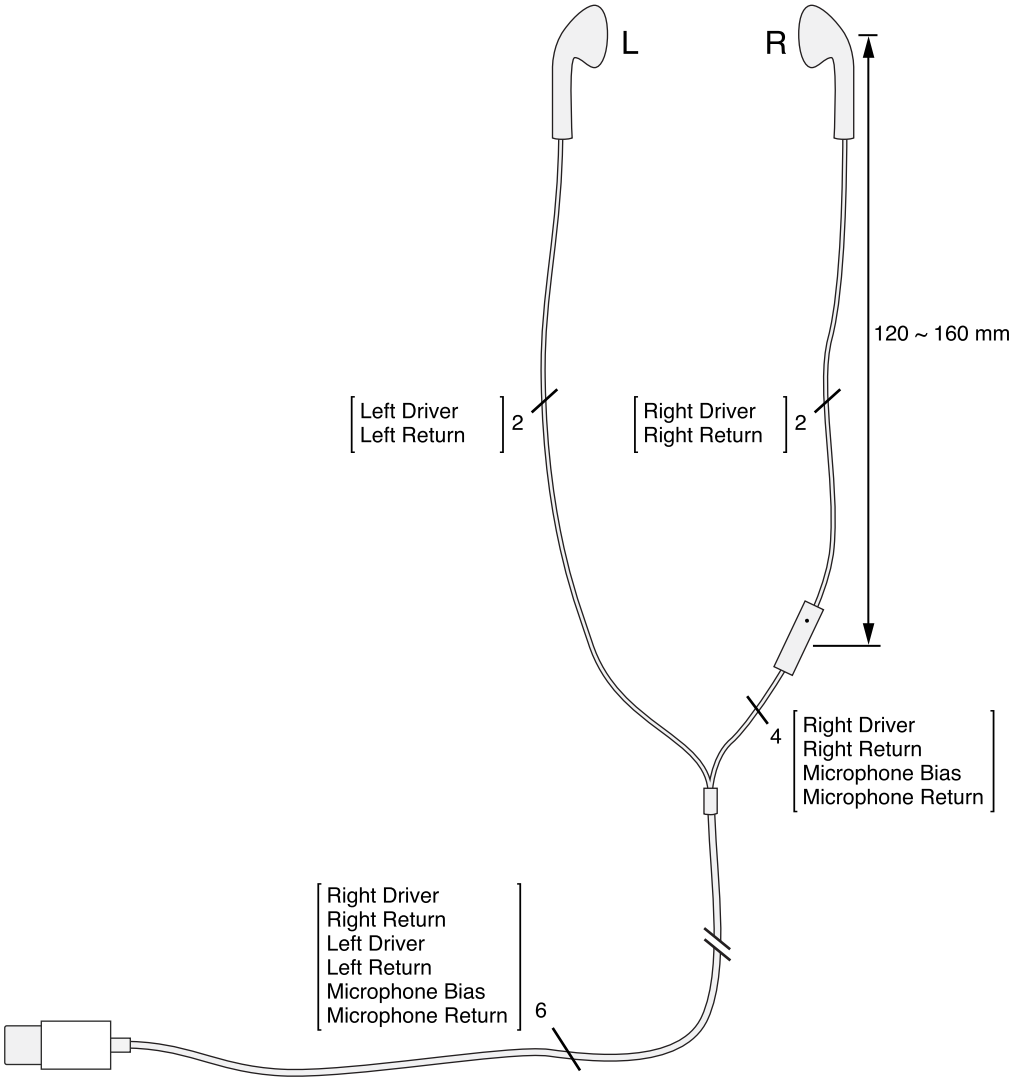

2023-10-10 | Copyright © 2023 Apple Inc. All Rights Reserved.

Connectors

52. USB-A Receptacle

[中文]

Accessories may incorporate a USB-A receptacle to:

- Provide power to a device.

52.1 Mechanical

[中文]

The USB-A receptacle shall meet or exceed all applicable USB-IF mechanical specifications.

52.2 Electrical

[中文]

The USB-A receptacle shall meet or exceed all applicable USB-IF electrical specifications.

2023-10-10 | Copyright © 2023 Apple Inc. All Rights Reserved.

53. USB-C Plug

[中文]

Accessories incorporating a USB-C plug shall comply with the *USB Type-C Cable and Connector Specification, Release 2.2*.

Accessories may incorporate a USB-C plug to:

- Provide power to device.
- Draw power from USB Type-C Current sources.
- Draw power from USB Power Delivery sources.
- Draw power from USB Dedicated Charging Ports and USB hosts.

Accessories benefiting from integrating a USB-C plug include cables, headsets, battery packs, and adapters.

53.1 Mechanical

[中文]

The USB-C plug shall have an assigned *Connector* Test ID from the USB-IF, see https://www.usb.org/products.

Accessories incorporating a USB-C plug shall comply with USB-C plug interface dimensions as specified in *USB Type-C Cable and Connector Specification, Release 2.2*.

USB-C plug enclosures shall not exceed the following dimensions as shown in Figure 53-1 (page 241):

- 'A' ≤ 12.35 mm
- 'B' ≤ 6.5 mm

2023-10-10 | Copyright © 2023 Apple Inc. All Rights Reserved.

Figure 53-1 USB-C plug example

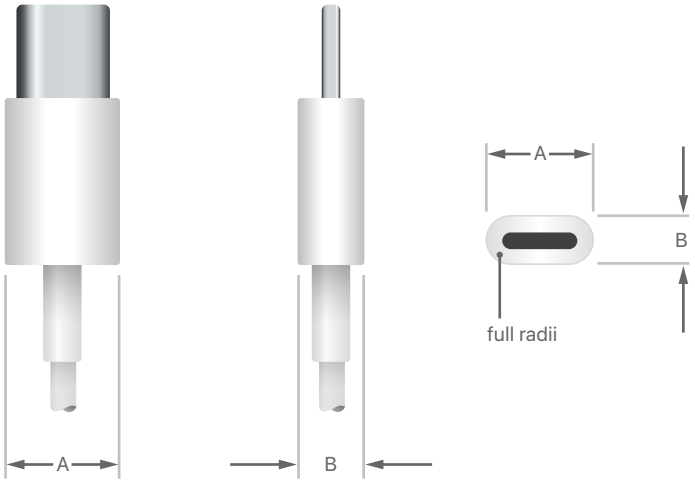

USB-C plug enclosures should have full radii rounded edges for the greatest compatibility with the widest variety of cases, see USB-C receptacle accessory keep-out (page 246).

53.2 Electrical [中文]

53.2.1 Drawing Power [中文]

Accessories drawing power from the USB-C plug shall:

- Correctly identify all USB Type-C Current (page 197) sources.
- Correctly identify all USB Dedicated Charging Ports (DCP) as defined in the *USB Battery Charging Specification, Release 1.2*.
- Enumerate as a USB device when connected to a USB host and:
  - Not draw more than 100 mA of current until they have been successfully enumerated.
  - Request no more than 500 mA of charging current in their USB device descriptor.
- Not draw more power than the USB power source claims it is capable of providing using one of the above methods.

Accessories may also correctly identify all USB Power Delivery (page 196) sources.

Accessories drawing power from a device may do so using one of the following protocols:

- USB Type-C Current (page 197)
- USB Power Delivery (page 196)

2023-10-10 | Copyright © 2023 Apple Inc. All Rights Reserved.

53.2.2 Providing Power [中文]

Accessories providing power to a device using a USB-C plug:

- Shall provide at least 15 W (3 A at 5.0 V) of power.
- Shall support USB Type-C Current (page 197).
- Should support USB Power Delivery (page 196).
- Should label the receptacle indicating how much power is supplied in watts.

53.3 Test Procedures [中文]

USB-C plug test procedures are outlined in this section.

53.3.1 Mechanical [中文]

Verify the dimensions of the USB-C plug comply with interface dimensions.

53.3.2 Connector Test ID [中文]

Verify the accessory's USB-C plug has an assigned *Connector* Test ID from the USB-IF, see https://www.usb.org/products.

53.3.3 Drawing Power [中文]

This procedure applies to accessories drawing power using the USB-C plug.

The following equipment is necessary:

- Apple 140W USB-C Power Adapter
- Apple 96W USB-C Power Adapter
- Apple 70W USB-C Power Adapter
- Apple 67W USB-C Power Adapter
- Apple 30W USB-C Power Adapter
- Apple 20W USB-C Power Adapter
- Apple 35W Dual USB-C Port Compact Power Adapter
- Apple 35W Dual USB-C Port Power Adapter
- Bundled USB-C power adapter (if applicable)

The following test cases apply to power source identification:

1. Verify the accessory correctly identifies all Apple branded or bundled power sources:
   a. Verify each USB-C power adapter is correctly identified and provides power.
2. Verify the accessory correctly identifies a Mac and iPad:
   a. Verify the Mac is correctly identified and provides power.

2023-10-10 | Copyright © 2023 Apple Inc. All Rights Reserved.

b. Verify the iPad is correctly identified and provides power.

2023-10-10 | Copyright © 2023 Apple Inc. All Rights Reserved.

54. USB-C Receptacle

[中文]

Accessories incorporating a USB-C receptacle shall comply with the *USB Type-C Cable and Connector Specification, Release 2.2*.

Accessories may incorporate a USB-C receptacle to:

- Provide power to device.
- Draw power from Apple branded power sources.
- Draw power from USB Type-C Current sources.
- Draw power from USB Power Delivery sources.
- Draw power from USB Dedicated Charging Ports and USB hosts.

Accessories benefiting from incorporating a USB-C receptacle include AC Power Adapters (page 74), Battery Packs (page 77), and speakers.

54.1 Mechanical

[中文]

The USB-C receptacle shall be USB-IF certified and have a *Connector* Test ID from the USB-IF, see https://www.usb.org/products.

Accessories incorporating a USB-C receptacle shall comply with USB-C receptacle interface dimensions as specified in *USB Type-C Cable and Connector Specification, Release 2.2*.

See the recommended minimum USB-C receptacle accessory keep-out (page 246).

54.2 Electrical

[中文]

54.2.1 Drawing Power

[中文]

Accessories drawing power from the USB-C receptacle shall:

- Correctly identify all Apple branded power sources.
- Correctly identify all USB Type-C Current (page 197) sources.
- Enumerate as a USB device when connected to a USB host and:
  - Not draw more than 100 mA of current until they have been successfully enumerated.
  - Request no more than 500 mA of charging current in their USB device descriptor.

2023-10-10 | Copyright © 2023 Apple Inc. All Rights Reserved.

- Correctly identify all USB Dedicated Charging Ports (DCP) as defined in the *USB Battery Charging Specification, Release 1.2*.
- Not draw more power than the USB power source claims it is capable of providing using one of the above methods.

Accessories may also correctly identify all USB Power Delivery (page 196) sources.

54.2.2 Providing Power [中文]

Accessories providing power to a device using a USB-C receptacle:

- Shall provide at least 15 W (3 A at 5.0 V) of power.
- Shall support USB Type-C Current (page 197).
- Should support USB Power Delivery (page 196).
- Should label the receptacle indicating how much power is supplied in watts.

2023-10-10 | Copyright © 2023 Apple Inc. All Rights Reserved.

54.3 USB-C receptacle accessory keep-out

[中文]

NOTES: (UNLESS OTHERWISE SPECIFIED)

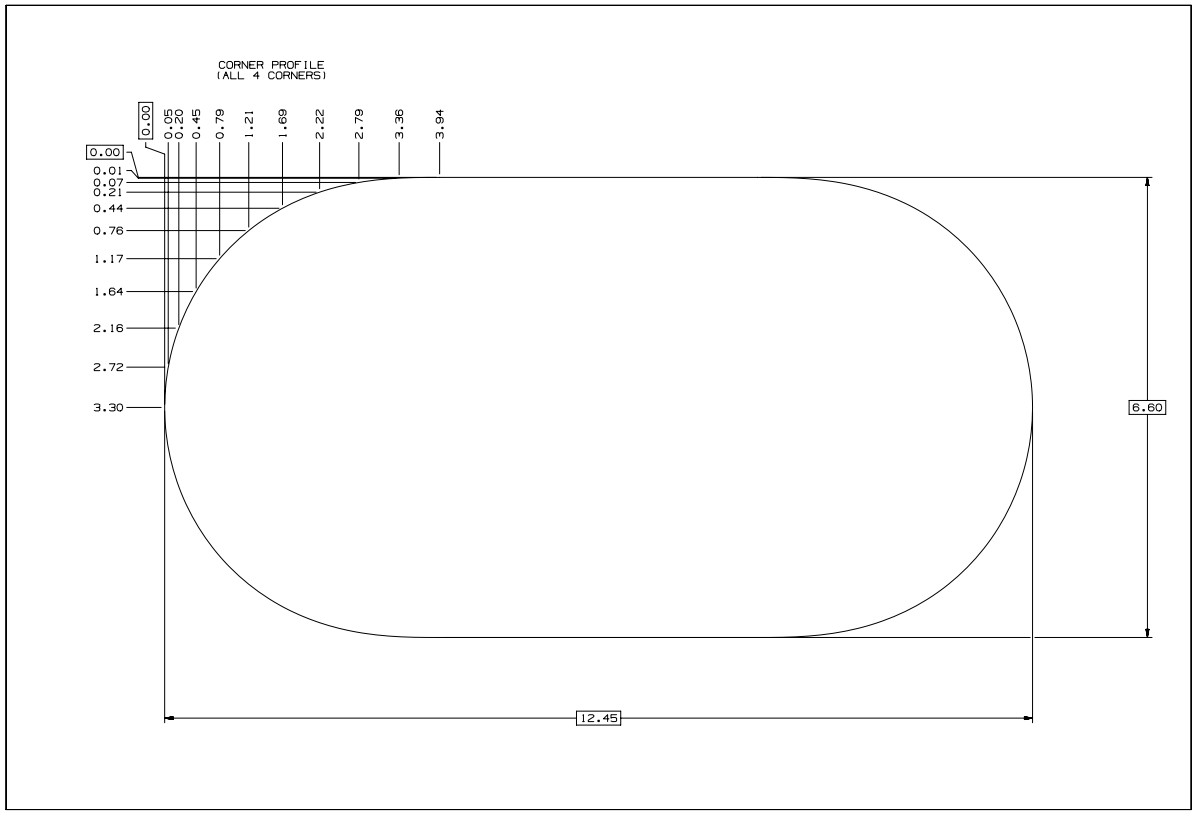

METRIC	Apple Inc.
DRAFTER / DATE	NOTICE OF PROPRIETARY PROPERTY: THE INFORMATION CONTAINED HEREIN IS THE PROPRIETARY PROPERTY OF APPLE INC. THE POSSESSOR AGREES TO THE FOLLOWING: (i) TO MAINTAIN THIS DOCUMENT IN CONFIDENCE (ii) NOT TO REPRODUCE OR COPY IT (iii) NOT TO REVERSE ENGINEER OR PUBLISH IT IN WHOLE OR PART (iv) ALL RIGHTS RESERVED
DESIGNER / DATE	
DIMENSIONS ARE IN MILLIMETERS TOLERANCES	TITLE: PROFILE,USB-C
DO NOT SCALE DRAWINGS	DRAWING NUMBER / REV.
THIRD ANGLE PROJECTION	SIZE D / SCALE 30:1 / SHT 1 OF 1

NX GENERATED

Copyright © 2023 Apple Inc. All Rights Reserved.

54.4 Test Procedures [中文]

USB-C receptacle test procedures are outlined in this section.

54.4.1 Connector Test ID [中文]

Verify the accessory's USB-C receptacle has an assigned *Connector* Test ID from the USB-IF, see https://www.usb.org/products.

54.4.2 Drawing Power [中文]

This procedure applies to accessories drawing power using the USB-C receptacle.

54.4.2.1 Equipment [中文]

The following equipment is necessary:

- Apple USB-C Charge Cable (1 m)
- Apple USB-C Charge Cable (2 m)
- Bundled USB-C to USB-C cable (if applicable)
- Bundled USB-A to USB-C cable (if applicable)
- 3rd-party USB-A to USB-C cable
- Apple 140W USB-C Power Adapter
- Apple 96W USB-C Power Adapter
- Apple 70W USB-C Power Adapter
- Apple 67W USB-C Power Adapter
- Apple 30W USB-C Power Adapter
- Apple 20W USB-C Power Adapter
- Apple 35W Dual USB-C Port Compact Power Adapter
- Apple 35W Dual USB-C Port Power Adapter
- Apple 12W USB Power Adapter
- Apple 5W USB Power Adapter
- Bundled USB-C power adapter (if applicable)
- Bundled USB-A power adapter (if applicable)

54.4.2.2 Test Cases [中文]

The following test cases apply to power source identification:

1. Verify the accessory correctly identifies all Apple branded or bundled power adapters:
   a. Using each USB-A to USB-C cable, verify each USB-A power adapter is correctly identified and provides power.

2023-10-10 | Copyright © 2023 Apple Inc. All Rights Reserved.

   b. Using each USB-C to USB-C cable, verify each USB-C power adapter is correctly identified and provides power.
2. Verify the accessory correctly identifies a Mac and iPad:
   a. Using each USB-A to USB-C cable and USB-C to USB-C cable, verify the Mac is correctly identified and provides power.
   b. Using each USB-A to USB-C cable and USB-C to USB-C cable, verify the iPad is correctly identified and provides power.

54.4.3 Providing Power [中文]

This procedure applies to accessories providing power using the USB-C receptacle.

54.4.3.1 Equipment [中文]

The following equipment is necessary:

- Apple USB-C to Lightning Cable (1 m)
- Apple USB-C to Lightning Cable (2 m)
- Apple USB-C Charge Cable (1 m)
- Apple USB-C Charge Cable (2 m)
- Bundled USB-C to USB-C cable (if applicable)

54.4.3.2 Test Cases [中文]

The following test cases apply to power providing devices:

1. Verify the accessory correctly provides power to devices:
   a. Using each USB-C to Lightning cable, verify the accessory uses USB Type-C Current or USB PD to identify at least 15 W of power providing capability.
   b. Using each USB-C to Lightning cable, verify the accessory provides power to the device.
2. Verify the accessory correctly identifies a Mac and iPad:
   a. Using each USB-C to USB-C cable, verify the accessory is correctly identified and provides power to the Mac.
   b. Using each USB-C to USB-C cable, verify the accessory is correctly identified and provides power to the iPad.

2023-10-10 | Copyright © 2023 Apple Inc. All Rights Reserved.

Tools

55. Accessory Developer Assistant (ADA) [中文]

Some test procedures in this specification require use of the Accessory Developer Assistant app, available from the App Store at https://apps.apple.com/us/app/accessory-developer-assistant/id1635862694.

Use the Accessory Developer Assistant app to ensure iPhone and iPad performance for features such as:

- Autofocus & Optical Image Stabilization (page 61)
- Compass (page 62)

55.1 Autofocus & Optical Image Stabilization Test Profile [中文]

The Autofocus & Optical Image Stabilization (page 61) test procedure requires an additional profile to be installed:

1. Use the device to access the ADA Camera Test profile at https://download.developer.apple.com/Developer_Tools/Accessory_Developer_Assistant_Camera_Test_Profile/ADACamera.mobileconfig.
2. Install the profile to the device.

2023-10-10 | Copyright © 2023 Apple Inc. All Rights Reserved.

3. Go to Settings > Profile Downloaded and complete the installation.
4. Reboot the device.

2023-10-10 | Copyright © 2023 Apple Inc. All Rights Reserved.

References

56. Device Dimensional Drawings

[中文]

This chapter contains the following dimensional drawings:

- iPhone 15 Pro Max 1 of 3 (page 259)
- iPhone 15 Pro Max 2 of 3 (page 260)
- iPhone 15 Pro Max 3 of 3 (page 261)
- iPhone 15 Pro 1 of 3 (page 262)
- iPhone 15 Pro 2 of 3 (page 263)
- iPhone 15 Pro 3 of 3 (page 264)
- iPhone 15 Plus 1 of 3 (page 265)
- iPhone 15 Plus 2 of 3 (page 266)
- iPhone 15 Plus 3 of 3 (page 267)
- iPhone 15 1 of 3 (page 268)
- iPhone 15 2 of 3 (page 269)
- iPhone 15 3 of 3 (page 270)
- iPhone 14 Pro Max 1 of 3 (page 271)
- iPhone 14 Pro Max 2 of 3 (page 272)
- iPhone 14 Pro Max 3 of 3 (page 273)
- iPhone 14 Pro 1 of 3 (page 274)
- iPhone 14 Pro 2 of 3 (page 275)
- iPhone 14 Pro 3 of 3 (page 276)
- iPhone 14 Plus 1 of 3 (page 277)
- iPhone 14 Plus 2 of 3 (page 278)
- iPhone 14 Plus 3 of 3 (page 279)
- iPhone 14 1 of 3 (page 280)
- iPhone 14 2 of 3 (page 281)
- iPhone 14 3 of 3 (page 282)
- iPhone SE (3rd generation) and iPhone SE (2nd generation) (page 299)
- iPhone 13 Pro Max 1 of 2 (page 283)
- iPhone 13 Pro Max 2 of 2 (page 284)
- iPhone 13 Pro 1 of 2 (page 285)
- iPhone 13 Pro 2 of 2 (page 286)
- iPhone 13 1 of 2 (page 287)
- iPhone 13 2 of 2 (page 288)
- iPhone 13 mini 1 of 2 (page 289)
- iPhone 13 mini 2 of 2 (page 290)

2023-10-10 | Copyright © 2023 Apple Inc. All Rights Reserved.

- iPhone 12 Pro Max 1 of 2 (page 291)
- iPhone 12 Pro Max 2 of 2 (page 292)
- iPhone 12 Pro 1 of 2 (page 293)
- iPhone 12 Pro 2 of 2 (page 294)
- iPhone 12 1 of 2 (page 295)
- iPhone 12 2 of 2 (page 296)
- iPhone 12 mini 1 of 2 (page 297)
- iPhone 12 mini 2 of 2 (page 298)
- iPhone 11 Pro Max (page 300)
- iPhone 11 Pro (page 301)
- iPhone 11 (page 302)
- iPhone XS Max (page 303)
- iPhone XS (page 304)
- iPhone XR (page 305)
- iPhone X (page 306)
- iPhone 8 Plus (page 307)
- iPhone 8 (page 308)
- iPhone 7 Plus (page 309)
- iPhone 7 (page 310)
- iPhone 6s Plus (page 311)
- iPhone 6s (page 312)
- iPhone 6 Plus (page 313)
- iPhone 6 (page 314)
- iPhone 5s and iPhone SE (page 315)
- iPhone 5c (page 316)
- iPhone 5 (page 317)
- iPad Pro 12.9-inch (6th generation) 1 of 5 (page 318)
- iPad Pro 12.9-inch (6th generation) 2 of 5 (page 319)
- iPad Pro 12.9-inch (6th generation) 3 of 5 (page 320)
- iPad Pro 12.9-inch (6th generation) 4 of 5 (page 321)
- iPad Pro 12.9-inch (6th generation) 5 of 5 (page 322)
- iPad Pro 11-inch (4th generation) 1 of 5 (page 323)
- iPad Pro 11-inch (4th generation) 2 of 5 (page 324)
- iPad Pro 11-inch (4th generation) 3 of 5 (page 325)
- iPad Pro 11-inch (4th generation) 4 of 5 (page 326)
- iPad Pro 11-inch (4th generation) 5 of 5 (page 327)
- iPad (10th generation) 1 of 6 (page 328)
- iPad (10th generation) 2 of 6 (page 329)
- iPad (10th generation) 3 of 6 (page 330)
- iPad (10th generation) 4 of 6 (page 331)

2023-10-10 | Copyright © 2023 Apple Inc. All Rights Reserved.

- iPad (10th generation) 5 of 6 (page 332)
- iPad (10th generation) 6 of 6 (page 333)
- iPad Air (5th generation) and iPad Air (4th generation) 1 of 5 (page 334)
- iPad Air (5th generation) and iPad Air (4th generation) 2 of 5 (page 335)
- iPad Air (5th generation) and iPad Air (4th generation) 3 of 5 (page 336)
- iPad Air (5th generation) and iPad Air (4th generation) 4 of 5 (page 337)
- iPad Air (5th generation) and iPad Air (4th generation) 5 of 5 (page 338)
- iPad mini (6th generation) 1 of 6 (page 339)
- iPad mini (6th generation) 2 of 6 (page 340)
- iPad mini (6th generation) 3 of 6 (page 341)
- iPad mini (6th generation) 4 of 6 (page 342)
- iPad mini (6th generation) 5 of 6 (page 343)
- iPad mini (6th generation) 6 of 6 (page 344)
- iPad (9th generation), iPad (8th generation) and iPad (7th generation) 1 of 4 (page 345)
- iPad (9th generation), iPad (8th generation) and iPad (7th generation) 2 of 4 (page 346)
- iPad (9th generation), iPad (8th generation) and iPad (7th generation) 3 of 4 (page 347)
- iPad (9th generation), iPad (8th generation) and iPad (7th generation) 4 of 4 (page 348)
- iPad Pro 12.9-inch (5th generation) 1 of 5 (page 349)
- iPad Pro 12.9-inch (5th generation) 2 of 5 (page 350)
- iPad Pro 12.9-inch (5th generation) 3 of 5 (page 351)
- iPad Pro 12.9-inch (5th generation) 4 of 5 (page 352)
- iPad Pro 12.9-inch (5th generation) 5 of 5 (page 353)
- iPad Pro 11-inch (3rd generation) 1 of 5 (page 354)
- iPad Pro 11-inch (3rd generation) 2 of 5 (page 355)
- iPad Pro 11-inch (3rd generation) 3 of 5 (page 356)
- iPad Pro 11-inch (3rd generation) 4 of 5 (page 357)
- iPad Pro 11-inch (3rd generation) 5 of 5 (page 358)
- iPad Pro 12.9-inch (4th generation) 1 of 5 (page 359)
- iPad Pro 12.9-inch (4th generation) 2 of 5 (page 360)
- iPad Pro 12.9-inch (4th generation) 3 of 5 (page 361)
- iPad Pro 12.9-inch (4th generation) 4 of 5 (page 362)
- iPad Pro 12.9-inch (4th generation) 5 of 5 (page 363)
- iPad Pro 11-inch (2nd generation) 1 of 5 (page 364)
- iPad Pro 11-inch (2nd generation) 2 of 5 (page 365)
- iPad Pro 11-inch (2nd generation) 3 of 5 (page 366)
- iPad Pro 11-inch (2nd generation) 4 of 5 (page 367)
- iPad Pro 11-inch (2nd generation) 5 of 5 (page 368)
- iPad Air (3rd generation) with Wi-Fi 1 of 3 (page 369)
- iPad Air (3rd generation) with Wi-Fi 2 of 3 (page 370)
- iPad Air (3rd generation) with Wi-Fi 3 of 3 (page 371)

2023-10-10 | Copyright © 2023 Apple Inc. All Rights Reserved.

- iPad Air (3rd generation) with Wi-Fi + Cellular 1 of 3 (page 372)
- iPad Air (3rd generation) with Wi-Fi + Cellular 2 of 3 (page 373)
- iPad Air (3rd generation) with Wi-Fi + Cellular 3 of 3 (page 374)
- iPad mini (5th generation) with Wi-Fi 1 of 3 (page 375)
- iPad mini (5th generation) with Wi-Fi 2 of 3 (page 376)
- iPad mini (5th generation) with Wi-Fi 3 of 3 (page 377)
- iPad mini (5th generation) with Wi-Fi + Cellular 1 of 3 (page 378)
- iPad mini (5th generation) with Wi-Fi + Cellular 2 of 3 (page 379)
- iPad mini (5th generation) with Wi-Fi + Cellular 3 of 3 (page 380)
- iPad Pro 12.9-inch (3rd generation) 1 of 3 (page 381)
- iPad Pro 12.9-inch (3rd generation) 2 of 3 (page 382)
- iPad Pro 12.9-inch (3rd generation) 3 of 3 (page 383)
- iPad Pro 11-inch (1st generation) 1 of 3 (page 384)
- iPad Pro 11-inch (1st generation) 2 of 3 (page 385)
- iPad Pro 11-inch (1st generation) 3 of 3 (page 386)
- iPad Pro 12.9-inch (2nd generation) with Wi-Fi (page 387)
- iPad Pro 12.9-inch (2nd generation) with Wi-Fi + Cellular (page 388)
- iPad Pro 12.9-inch (2nd generation) Magnet/Hall Effect Sensors 1 of 2 (page 389)
- iPad Pro 12.9-inch (2nd generation) Magnet/Hall Effect Sensors 2 of 2 (page 390)
- iPad Pro 10.5-inch with Wi-Fi (page 391)
- iPad Pro 10.5-inch with Wi-Fi + Cellular (page 392)
- iPad Pro 10.5-inch Magnet/Hall Effect Sensors 1 of 2 (page 393)
- iPad Pro 10.5-inch Magnet/Hall Effect Sensors 2 of 2 (page 394)
- iPad (5th and 6th generation) with Wi-Fi + Cellular (page 395)
- iPad (5th and 6th generation) Magnet/Hall Effect Sensors 1 of 2 (page 396)
- iPad (5th and 6th generation) Magnet/Hall Effect Sensors 2 of 2 (page 397)
- iPad Pro 9.7-inch with Wi-Fi (page 398)
- iPad Pro 9.7-inch with Wi-Fi + Cellular (page 399)
- iPad Pro 9.7-inch Magnet/Hall Effect Sensors 1 of 2 (page 400)
- iPad Pro 9.7-inch Magnet/Hall Effect Sensors 2 of 2 (page 401)
- iPad Pro 12.9-inch (1st generation) with Wi-Fi (page 402)
- iPad Pro 12.9-inch (1st generation) with Wi-Fi + Cellular (page 403)
- iPad Pro 12.9-inch (1st generation) Magnet/Hall Effect Sensors 1 of 2 (page 404)
- iPad Pro 12.9-inch (1st generation) Magnet/Hall Effect Sensors 2 of 2 (page 405)
- iPad mini 4 with Wi-Fi (page 406)
- iPad mini 4 with Wi-Fi + Cellular (page 407)
- iPad mini 4 Magnet/Hall Effect Sensors (page 408)
- iPad Air 2 with Wi-Fi (page 409)
- iPad Air 2 with Wi-Fi + Cellular (page 410)
- iPad mini 2 and iPad mini 3 with Wi-Fi (page 411)

2023-10-10 | Copyright © 2023 Apple Inc. All Rights Reserved.

- iPad mini 2 and iPad mini 3 with Wi-Fi + Cellular (page 412)
- iPad Air with Wi-Fi (page 413)
- iPad Air with Wi-Fi + Cellular (page 414)
- iPad mini with Wi-Fi (page 415)
- iPad mini with Wi-Fi + Cellular (page 416)
- iPad (4th generation) with Wi-Fi (page 417)
- iPad (4th generation) with Wi-Fi + Cellular (page 418)
- iPod touch (6th generation) and iPod touch (7th generation) (page 419)
- iPod touch (5th generation) (page 420)
- Apple Watch Ultra 2, 1 of 3 (page 421)
- Apple Watch Ultra 2, 2 of 3 (page 422)
- Apple Watch Ultra 2, 3 of 3 (page 423)
- Apple Watch Series 9, 45 mm (page 424)
- Apple Watch Series 9, 41 mm (page 425)
- Apple Watch Ultra, 1 of 3 (page 426)
- Apple Watch Ultra, 2 of 3 (page 427)
- Apple Watch Ultra, 3 of 3 (page 428)
- Apple Watch Series 8, 45 mm (page 429)
- Apple Watch Series 8, 41 mm (page 430)
- Apple Watch SE, 44 mm (page 431)
- Apple Watch SE, 40 mm (page 432)
- Apple Watch Series 7, 45 mm (page 433)
- Apple Watch Series 7, 41 mm (page 434)
- Apple Watch Series 6, 44 mm (page 435)
- Apple Watch Series 6, 40 mm (page 436)
- Apple Watch SE (1st generation), 44 mm (page 437)
- Apple Watch SE (1st generation), 40 mm (page 438)
- Apple Watch Series 5, 44 mm (page 439)
- Apple Watch Series 5, 40 mm (page 440)
- Apple Watch Series 5 Ceramic, 44 mm (page 441)
- Apple Watch Series 5 Ceramic, 40 mm (page 442)
- Apple Watch Series 4, 44 mm (page 443)
- Apple Watch Series 4, 40 mm (page 444)
- Apple Watch Series 3 Ceramic, 42 mm (page 445)
- Apple Watch Series 3 Ceramic, 38 mm (page 446)
- Apple Watch Series 3 Metal, 42 mm (page 447)
- Apple Watch Series 3 Metal, 38 mm (page 448)
- Apple Watch Series 2 Ceramic, 42 mm (page 449)
- Apple Watch Series 2 Ceramic, 38 mm (page 450)
- Apple Watch Series 2 Metal, 42 mm (page 451)

2023-10-10 | Copyright © 2023 Apple Inc. All Rights Reserved.

- Apple Watch Series 2 Metal, 38 mm (page 452)
- Apple Watch (1st generation) and Apple Watch Series 1, 42 mm (page 453)
- Apple Watch (1st generation) and Apple Watch Series 1, 38 mm (page 454)
- MagSafe Charging Case (USB-C) for AirPods Pro (2nd generation) 1 of 3 (page 455)
- MagSafe Charging Case (USB-C) for AirPods Pro (2nd generation) 2 of 3 (page 456)
- MagSafe Charging Case (USB-C) for AirPods Pro (2nd generation) 3 of 3 (page 457)
- MagSafe Charging Case for AirPods Pro (2nd generation) 1 of 3 (page 458)
- MagSafe Charging Case for AirPods Pro (2nd generation) 2 of 3 (page 459)
- MagSafe Charging Case for AirPods Pro (2nd generation) 3 of 3 (page 460)
- AirPods Pro (2nd generation) (page 461)
- MagSafe Charging Case for AirPods (3rd generation) (page 462)
- AirPods (3rd generation) (page 463)
- Wireless Charging Case for AirPods Pro (1st generation) (page 464)
- AirPods Pro (1st generation) (page 465)
- Wireless Charging Case for AirPods (page 466)
- AirPods (1st generation) and AirPods (2nd generation) (page 467)
- AirTag (page 468)
- Apple TV 4K (3rd generation) (page 469)
- Siri Remote (3rd generation) (page 470)

2023-10-10 | Copyright © 2023 Apple Inc. All Rights Reserved.

56.1 iPhone 15 Pro Max 1 of 3

[中文]

NOTES: (UNLESS OTHERWISE SPECIFIED)

1. NO METAL CONTACT WITH PRODUCT.
2. DO NOT OBSTRUCT PORTS.
3. DO NOT OBSTRUCT THE IMAGING FEATURES: FRONT CAMERA, REAR CAMERAS, REAR FLASH.
4. DO NOT OBSTRUCT FORWARD FACING SENSORS.
5. RELATIVE MAGNETIC PERMEABILITY OF ANY METAL USED ON CASE: 1.05 MAX, PER ASTM A342/A342M-14.
6. DO NOT TOUCH GLASS.
7. NO MAGNETS ON REAR OF PRODUCT EXCEPT MAGSAFE MAGNETS.
8. CASE THICKNESS ON BACKSIDE OF PRODUCT: 2.1 mm MAX TO ENSURE FULL FUNCTIONALITY.

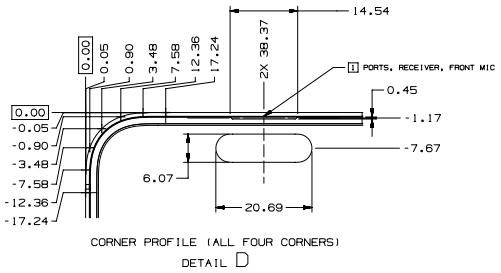

CORNER PROFILE (ALL FOUR CORNERS)
DETAIL D

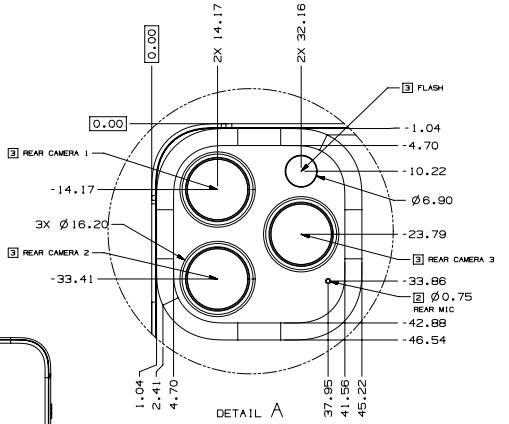

DETAIL A

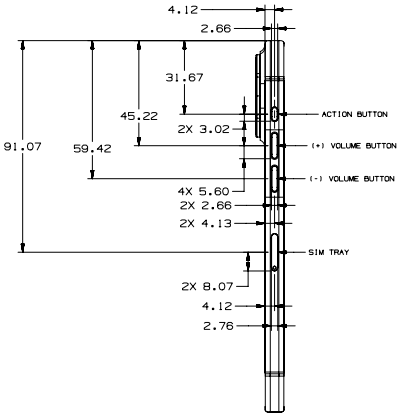

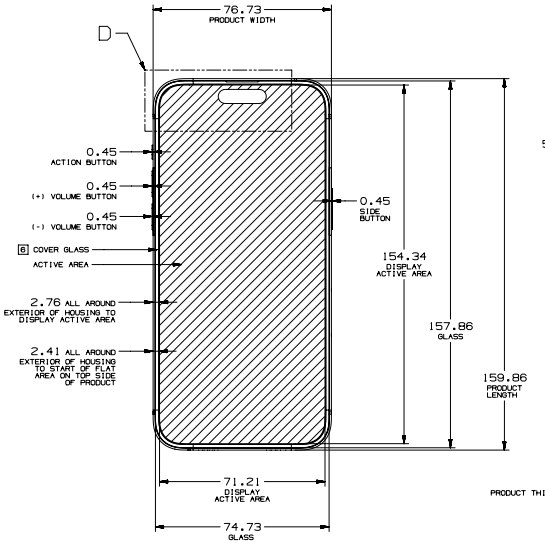

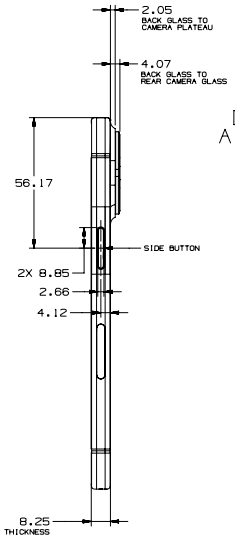

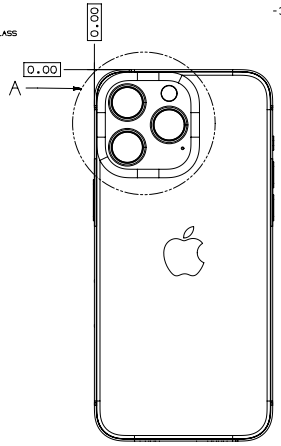

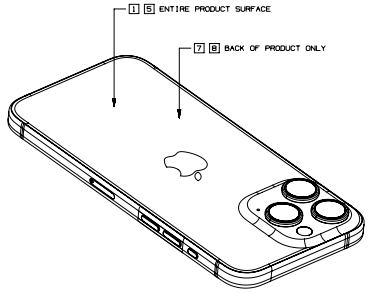

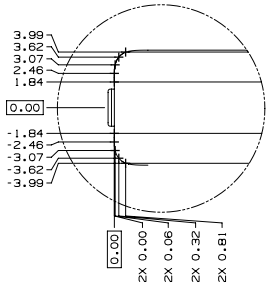

PROFILE (ALL SIDES)
DETAIL B

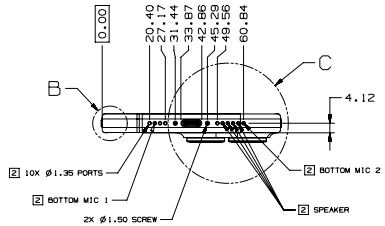

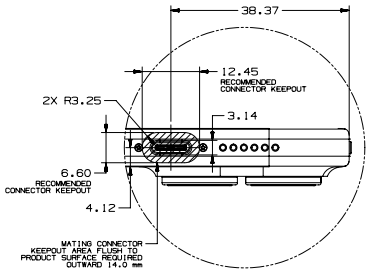

DETAIL C

METRIC	
DRAFTER / DATE	NOTICE OF PROPRIETARY PROPERTY: THE INFORMATION CONTAINED HEREIN IS THE PROPRIETARY PROPERTY OF APPLE INC. THE POSSESSOR AGREES TO THE FOLLOWING: (i) TO MAINTAIN THIS DOCUMENT IN CONFIDENCE (ii) NOT TO COPY OR REPRODUCE IT (iii) NOT TO REVEAL OR PUBLISH IT IN WHOLE OR PART (iv) ALL RIGHTS RESERVED
DESIGNER / DATE	
DIMENSIONS ARE IN MILLIMETERS TOLERANCES X.X ±0.2 X.XX ±0.10 X.XXX ±0.050 ANGLES ±0.5° DO NOT SCALE DRAWING	TITLE: IPHONE 15 PRO MAX
THIRD ANGLE PROJECTION	DRAWING NUMBER / REV. / SIZE D / SCALE NONE / SHT 1 OF 3

NX GENERATED

Copyright © 2023 Apple Inc. All Rights Reserved.

56.2 iPhone 15 Pro Max 2 of 3

[中文]

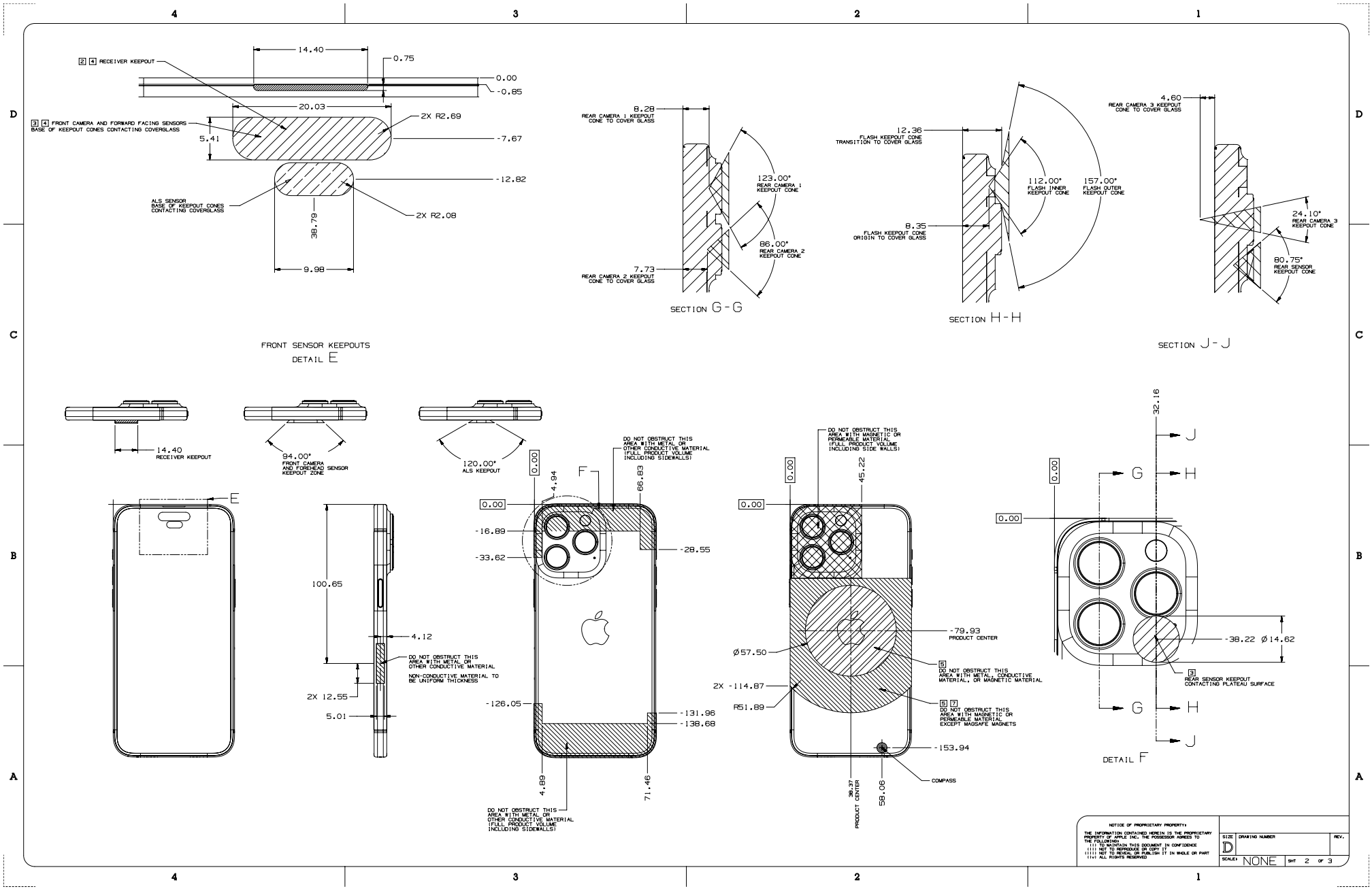

Copyright © 2023 Apple Inc. All Rights Reserved.

56.3 iPhone 15 Pro Max 3 of 3

[中文]

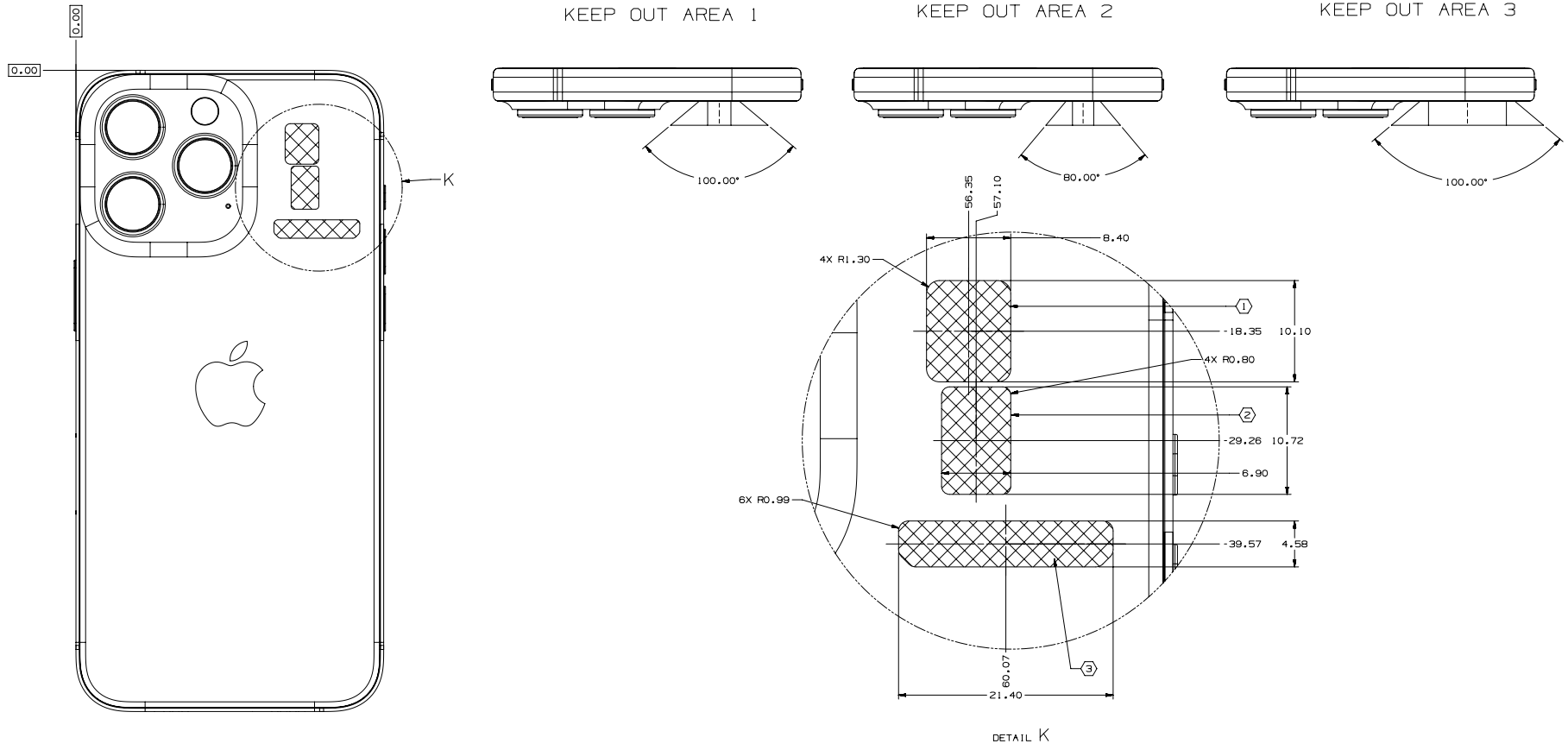

NOTICE OF PROPRIETARY PROPERTY:
THE INFORMATION CONTAINED HEREIN IS THE PROPRIETARY PROPERTY OF APPLE INC. THE POSSESSOR AGREES TO THE FOLLOWING:
(i) TO MAINTAIN THIS DOCUMENT IN CONFIDENCE
(ii) NOT TO REPRODUCE OR COPY IT
(iii) NOT TO REVEAL OR PUBLISH IT IN WHOLE OR PART
(iv) ALL RIGHTS RESERVED

SIZE D | DRAWING NUMBER | REV.
SCALE: NONE | SHT 3 OF 3

56.4 iPhone 15 Pro 1 of 3

[中文]

NOTES: (UNLESS OTHERWISE SPECIFIED)

1. NO METAL CONTACT WITH PRODUCT.
2. DO NOT OBSTRUCT PORTS.
3. DO NOT OBSTRUCT THE IMAGING FEATURES: FRONT CAMERA, REAR CAMERAS, REAR FLASH.
4. DO NOT OBSTRUCT FORWARD FACING SENSORS.
5. RELATIVE MAGNETIC PERMEABILITY OF ANY METAL USED ON CASE: 1.05 MAX, PER ASTM A342/A342M-14.
6. DO NOT TOUCH GLASS.
7. NO MAGNETS ON REAR OF PRODUCT EXCEPT MAGSAFE MAGNETS.
8. CASE THICKNESS ON BACKSIDE OF PRODUCT: 2.1 mm MAX TO ENSURE FULL FUNCTIONALITY.

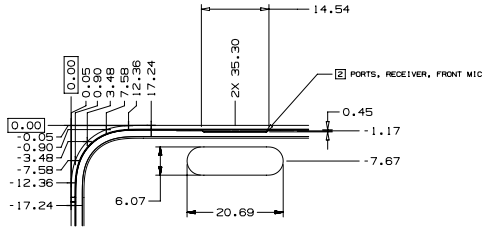

CORNER PROFILE (ALL FOUR CORNERS)
DETAIL A

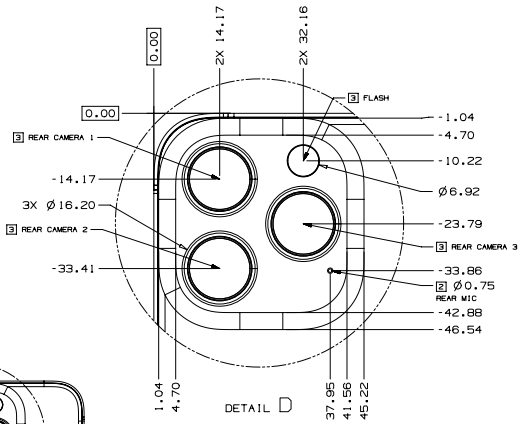

DETAIL D

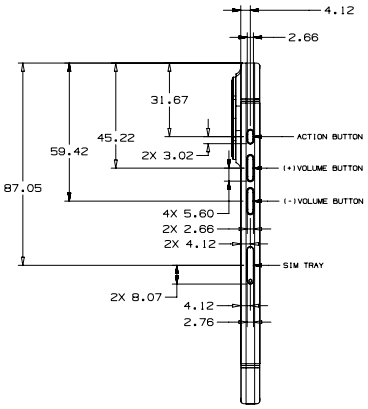

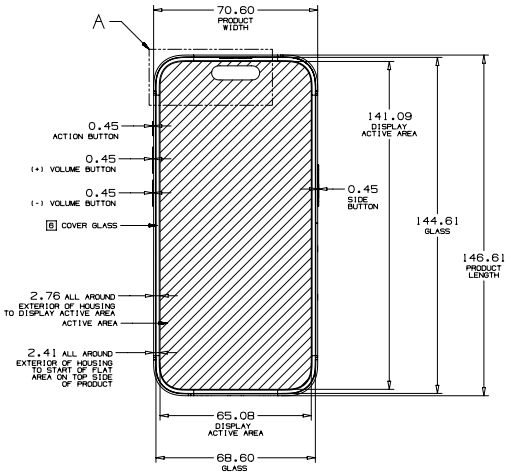

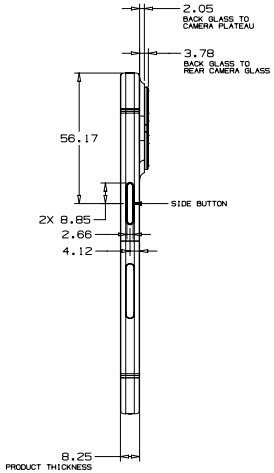

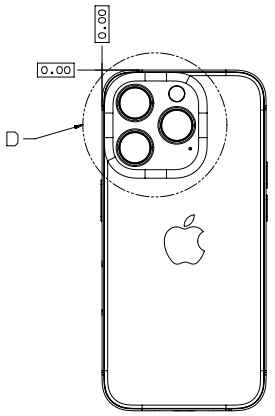

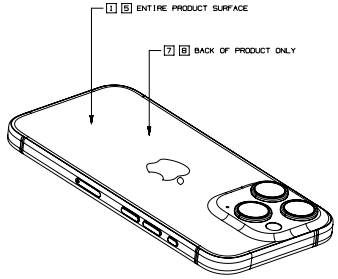

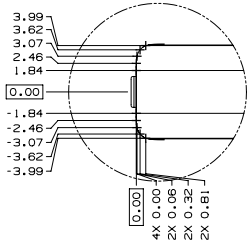

PROFILE (ALL SIDES)
DETAIL B

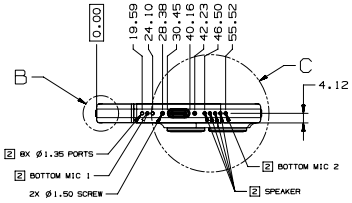

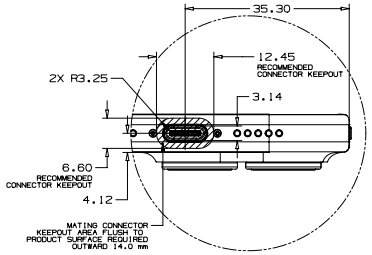

DETAIL C

METRIC	
DRAFTER / DATE	NOTICE OF PROPRIETARY PROPERTY: THE INFORMATION CONTAINED HEREIN IS THE PROPRIETARY PROPERTY OF APPLE INC. THE POSSESSOR AGREES TO THE FOLLOWING: (i) TO MAINTAIN THIS DOCUMENT IN CONFIDENCE (ii) NOT TO REPRODUCE OR COPY IT (iii) NOT TO REVEAL OR PUBLISH IT IN WHOLE OR PART (iv) ALL RIGHTS RESERVED
DESIGNER / DATE	
DIMENSIONS ARE IN MILLIMETERS TOLERANCES X.X ±0.2 X.XX ±0.10 X.XXX ±0.050 ANGLES ±0.5° DO NOT SCALE DRAWINGS	TITLE: IPHONE 15 PRO
THIRD ANGLE PROJECTION	SIZE D · SCALE NONE · DRAWING NUMBER · REV. · SHT 1 OF 3

NX GENERATED

Copyright © 2023 Apple Inc. All Rights Reserved.

56.5 iPhone 15 Pro 2 of 3

[中文]

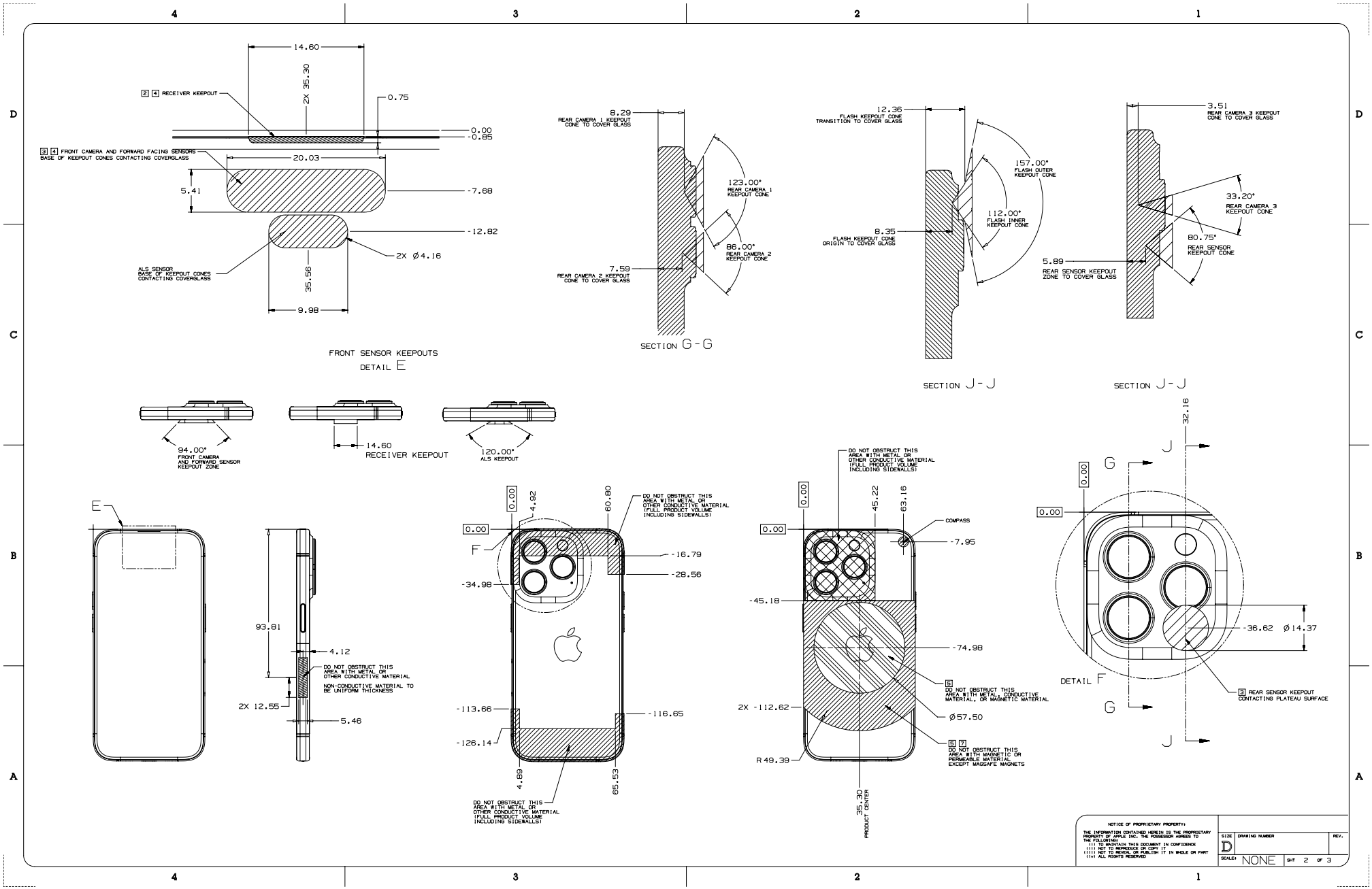

56.6 iPhone 15 Pro 3 of 3

[中文]

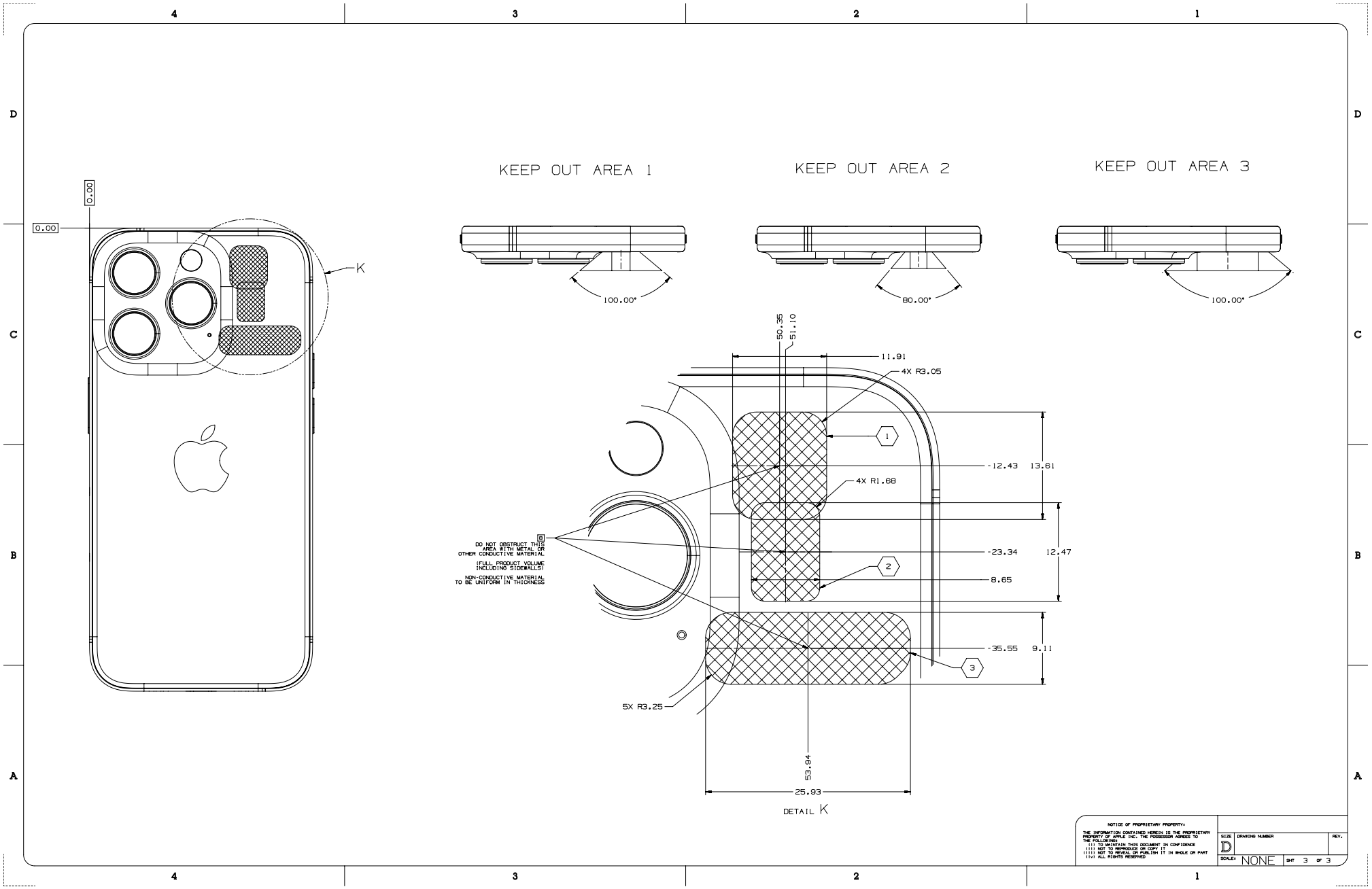

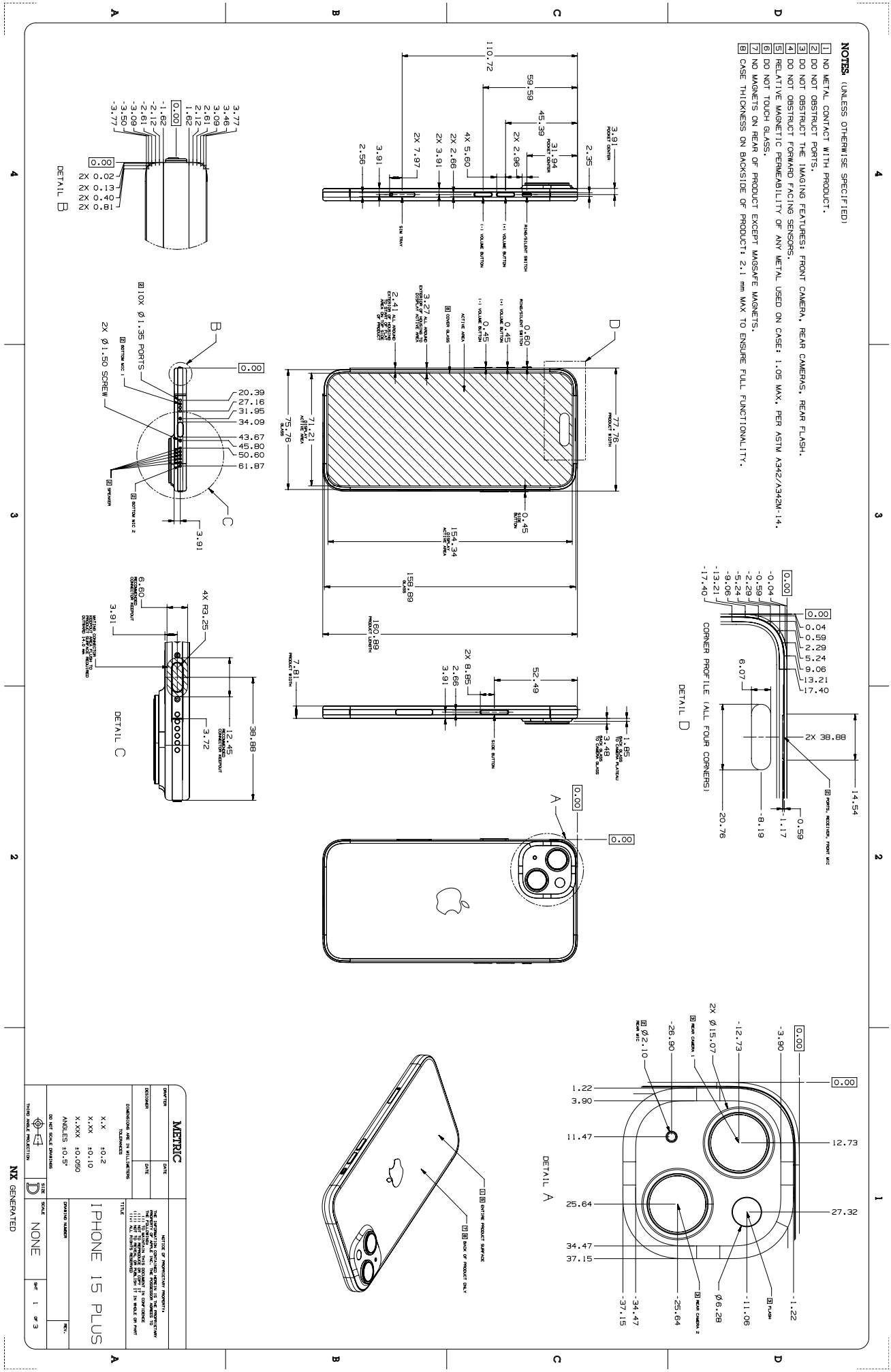

2023-10-10 | Copyright © 2023 Apple Inc. All Rights Reserved.

56.8 iPhone 15 Plus 2 of 3

[中文]

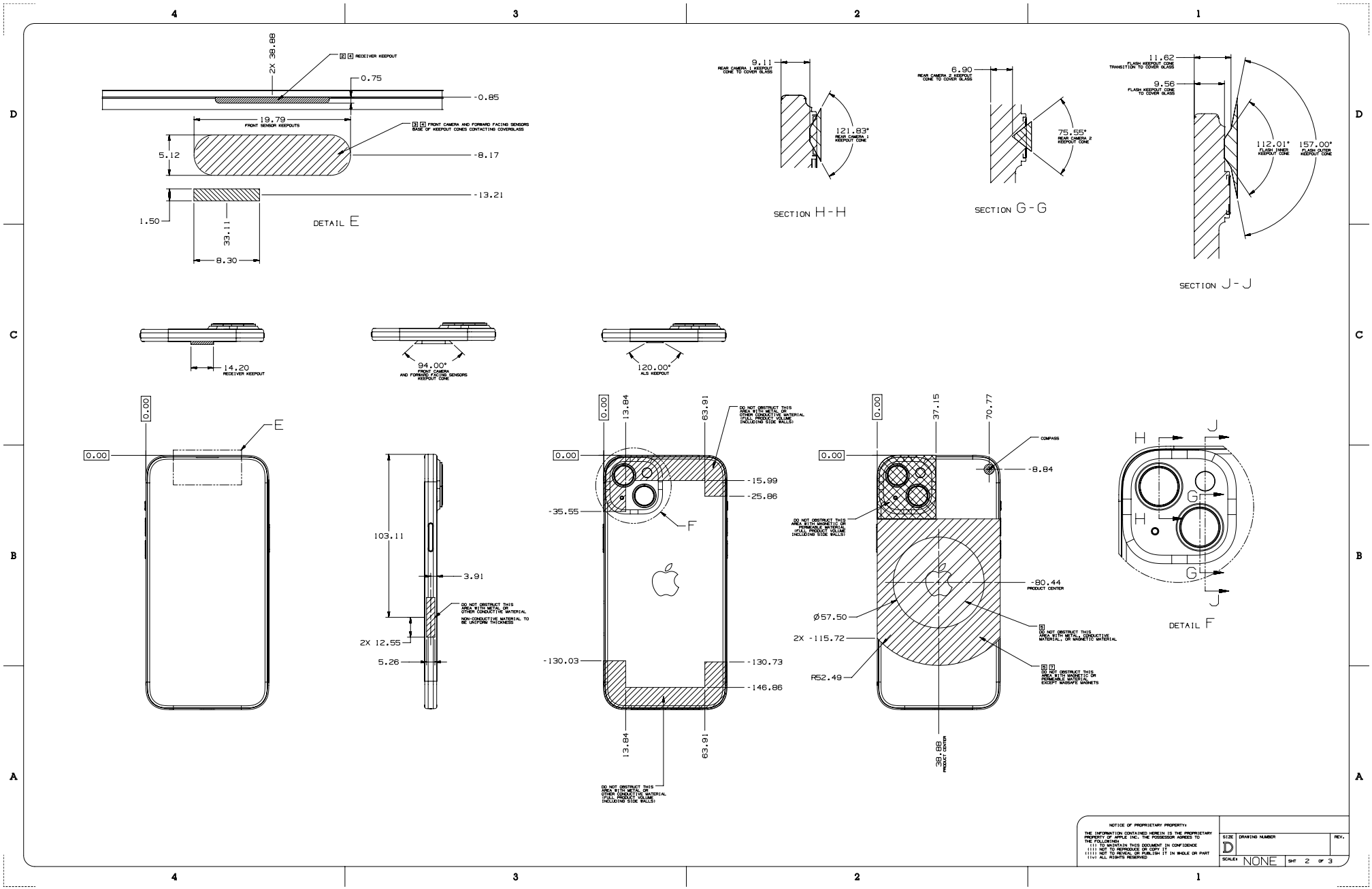

Copyright © 2023 Apple Inc. All Rights Reserved.

56.9 iPhone 15 Plus 3 of 3

[中文]

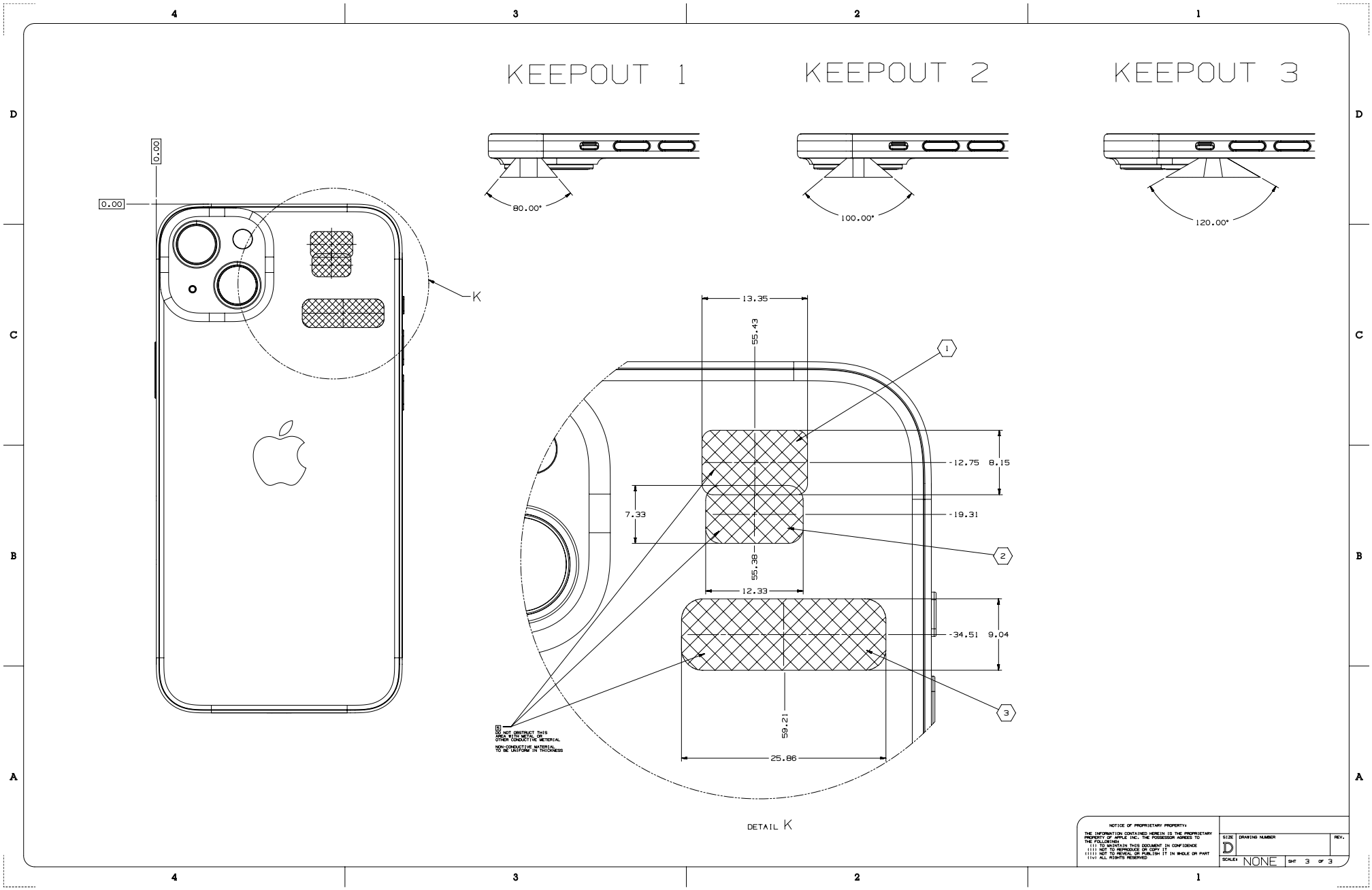

Copyright © 2023 Apple Inc. All Rights Reserved.

56.10 iPhone 15 1 of 3

[中文]

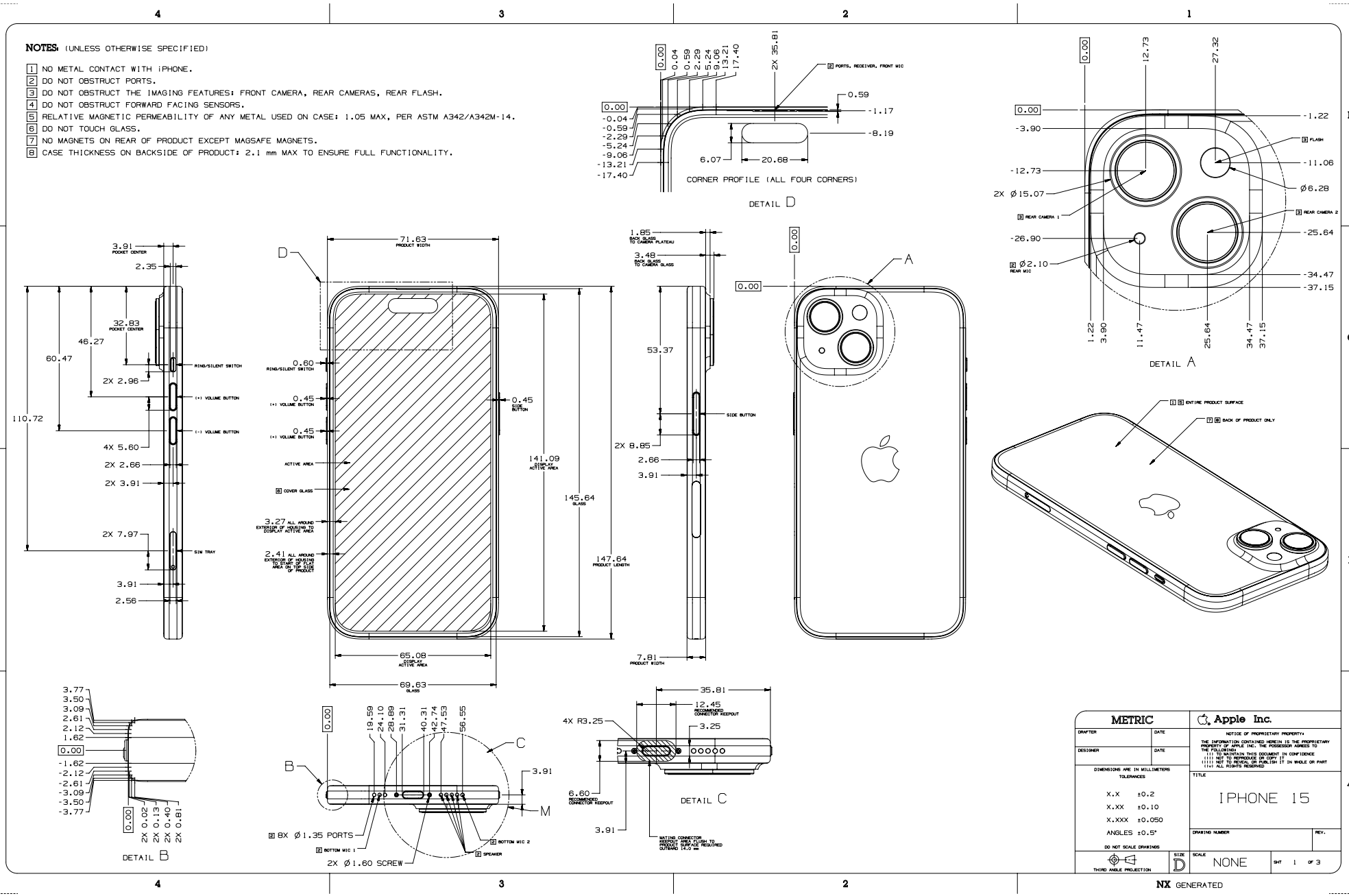

56.11 iPhone 15 2 of 3

[中文]

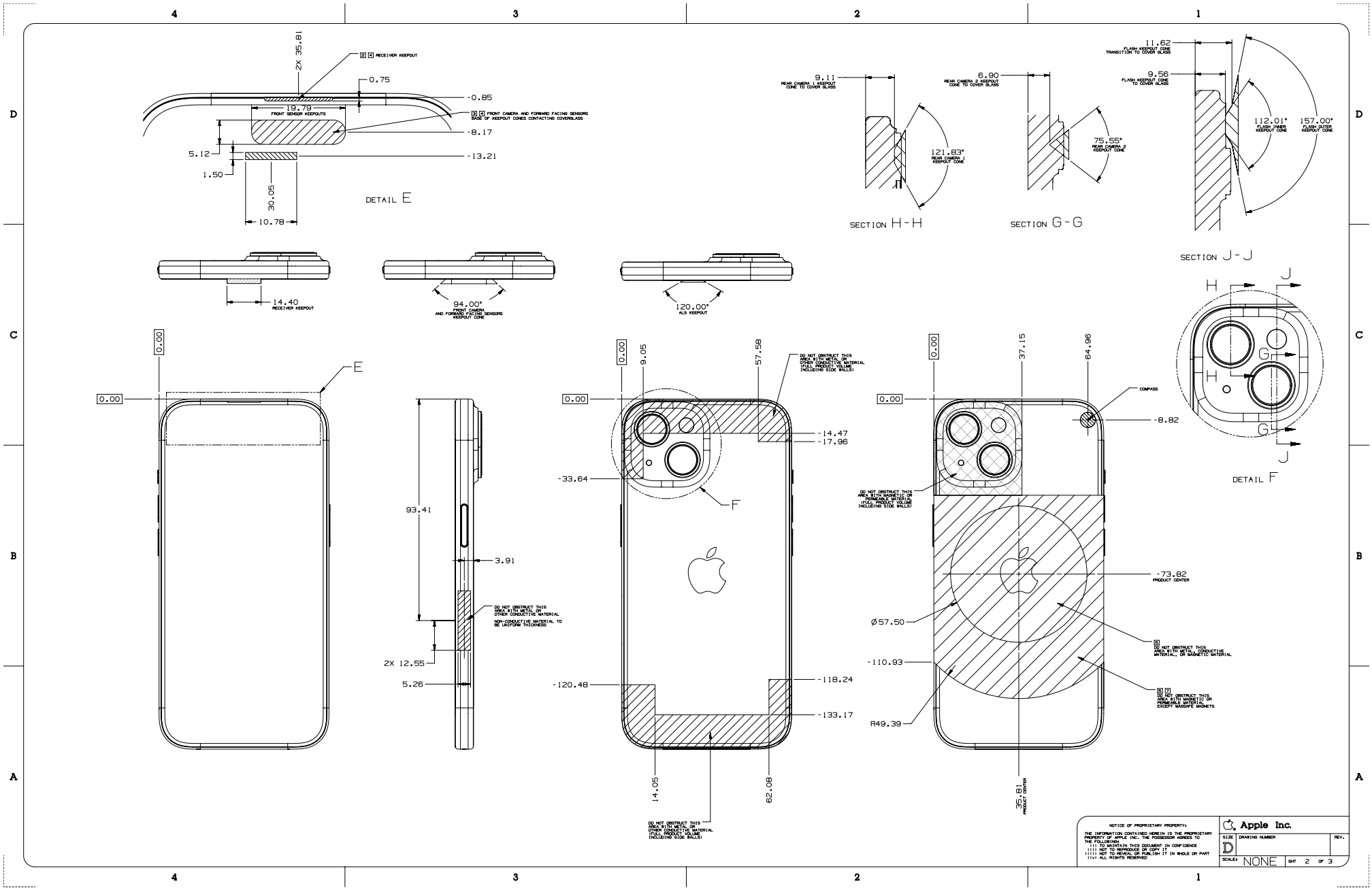

Copyright © 2023 Apple Inc. All Rights Reserved.

56.12 iPhone 15 3 of 3

[中文]

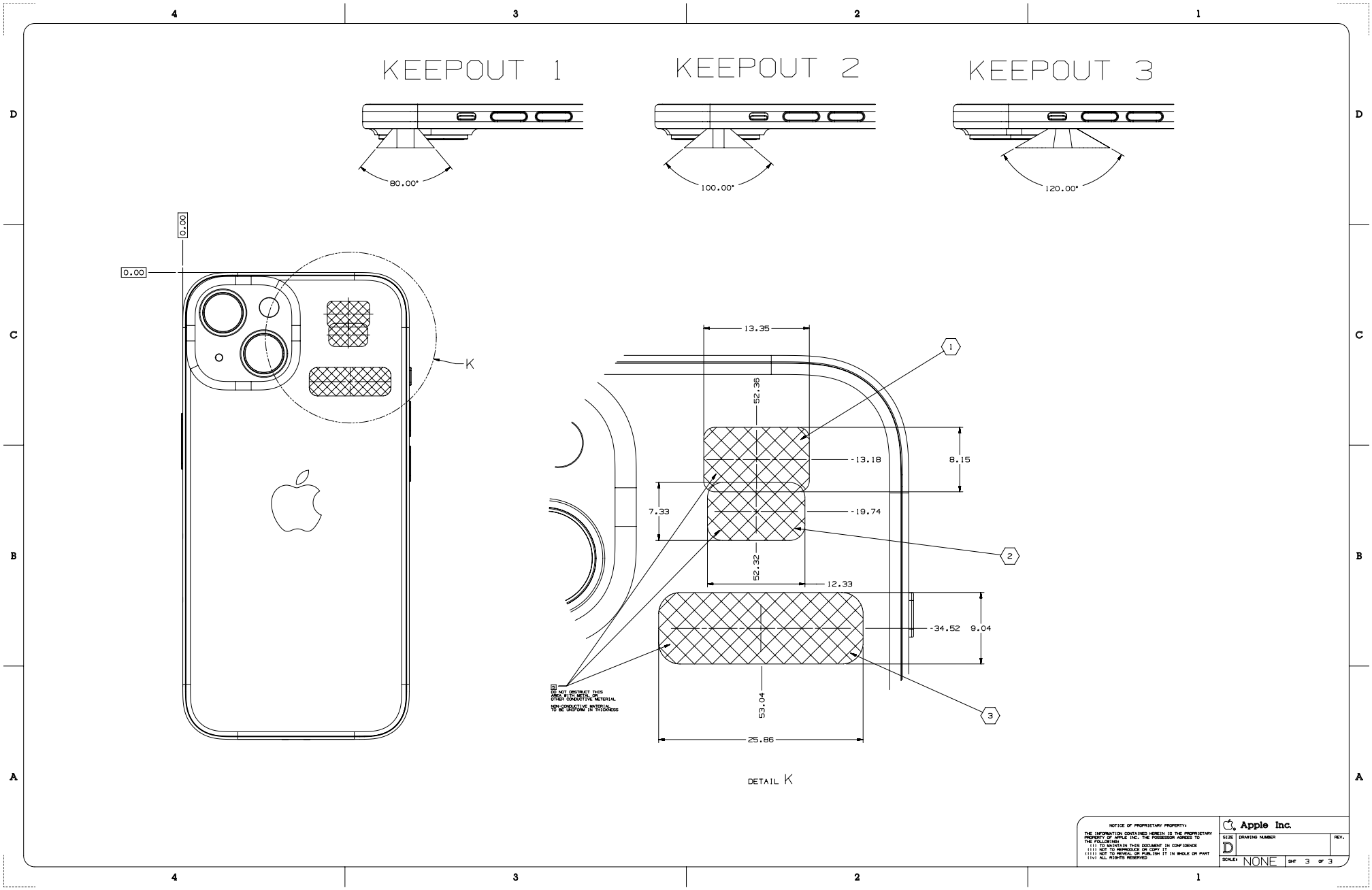

Copyright © 2023 Apple Inc. All Rights Reserved.

56.13 iPhone 14 Pro Max 1 of 3

[中文]

NOTES: (UNLESS OTHERWISE SPECIFIED)

1. NO METAL CONTACT WITH iPHONE.
2. DO NOT OBSTRUCT PORTS.
3. DO NOT OBSTRUCT THE IMAGING FEATURES: FRONT CAMERA, REAR CAMERAS, REAR FLASH.
4. DO NOT OBSTRUCT FORWARD FACING SENSORS.
5. RELATIVE MAGNETIC PERMEABILITY OF ANY METAL USED ON CASE: 1.05 MAX, PER ASTM A342/A342M-14.
6. DO NOT TOUCH GLASS.
7. NO MAGNETS ON REAR OF PRODUCT EXCEPT MAGSAFE MAGNETS.
8. CASE THICKNESS ON BACKSIDE OF PRODUCT: 2.1 mm MAX TO ENSURE FULL FUNCTIONALITY.

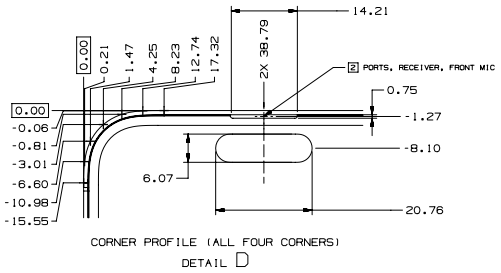

CORNER PROFILE (ALL FOUR CORNERS)
DETAIL D

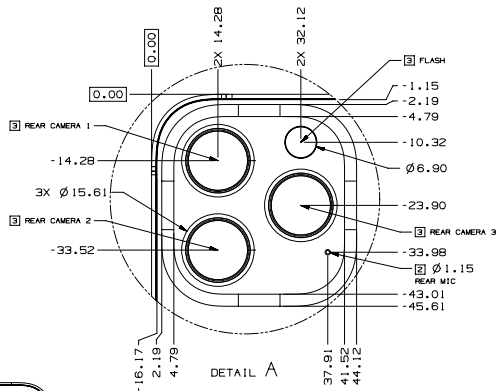

DETAIL A

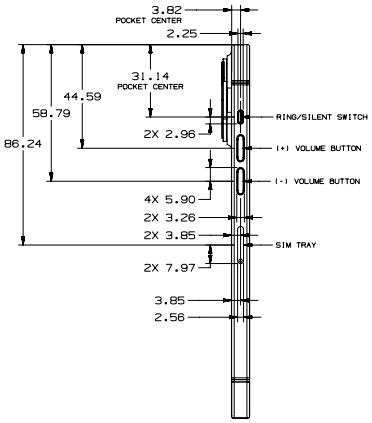

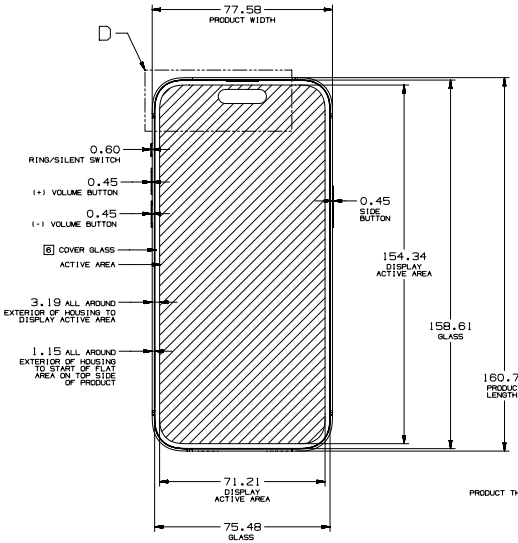

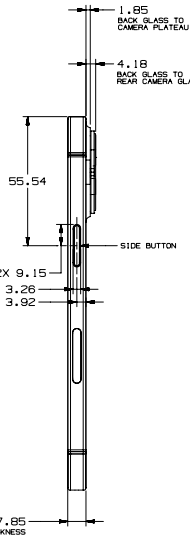

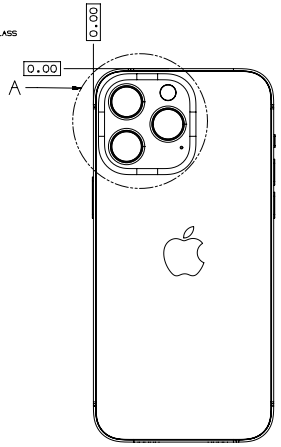

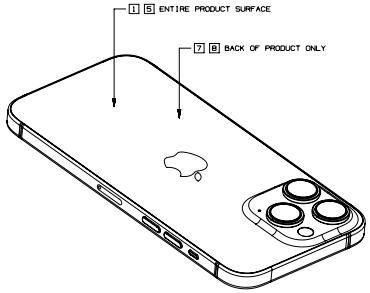

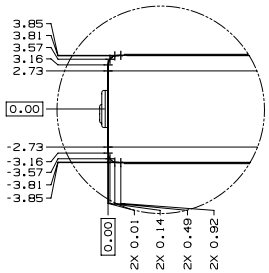

PROFILE (ALL SIDES)
DETAIL B

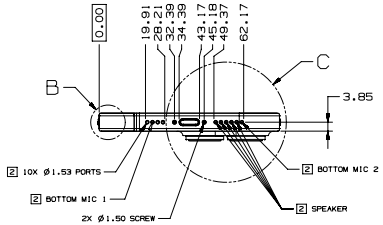

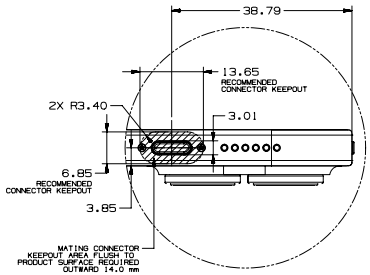

DETAIL C

METRIC	Apple Inc.
DRAWTER / DATE	NOTICE OF PROPRIETARY PROPERTY: THE INFORMATION CONTAINED HEREIN IS THE PROPRIETARY PROPERTY OF APPLE INC. THE POSSESSOR AGREES TO THE FOLLOWING: (i) TO MAINTAIN THIS DOCUMENT IN CONFIDENCE (ii) NOT TO REPRODUCE OR COPY IT (iii) NOT TO REVERSE ENGINEER OR PUBLISH IT IN WHOLE OR PART (iv) ALL RIGHTS RESERVED
DESIGNER / DATE	
DIMENSIONS ARE IN MILLIMETERS TOLERANCES 0 < - < 2 ±0.05 2 < - < 10 ±0.08 10 < - < 50 ±0.10 50 < - < 100 ±0.20 100 < - < 200 ±0.30 200 < - ±0.40 ANGLES ±0.50° DO NOT SCALE DRAWING	TITLE: IPHONE 14 PRO MAX
THIRD ANGLE PROJECTION / SIZE D	DRAWING NUMBER / REV.
	SCALE NONE / SHT 1 OF 3

NX GENERATED

Copyright © 2023 Apple Inc. All Rights Reserved.

56.14 iPhone 14 Pro Max 2 of 3

[中文]

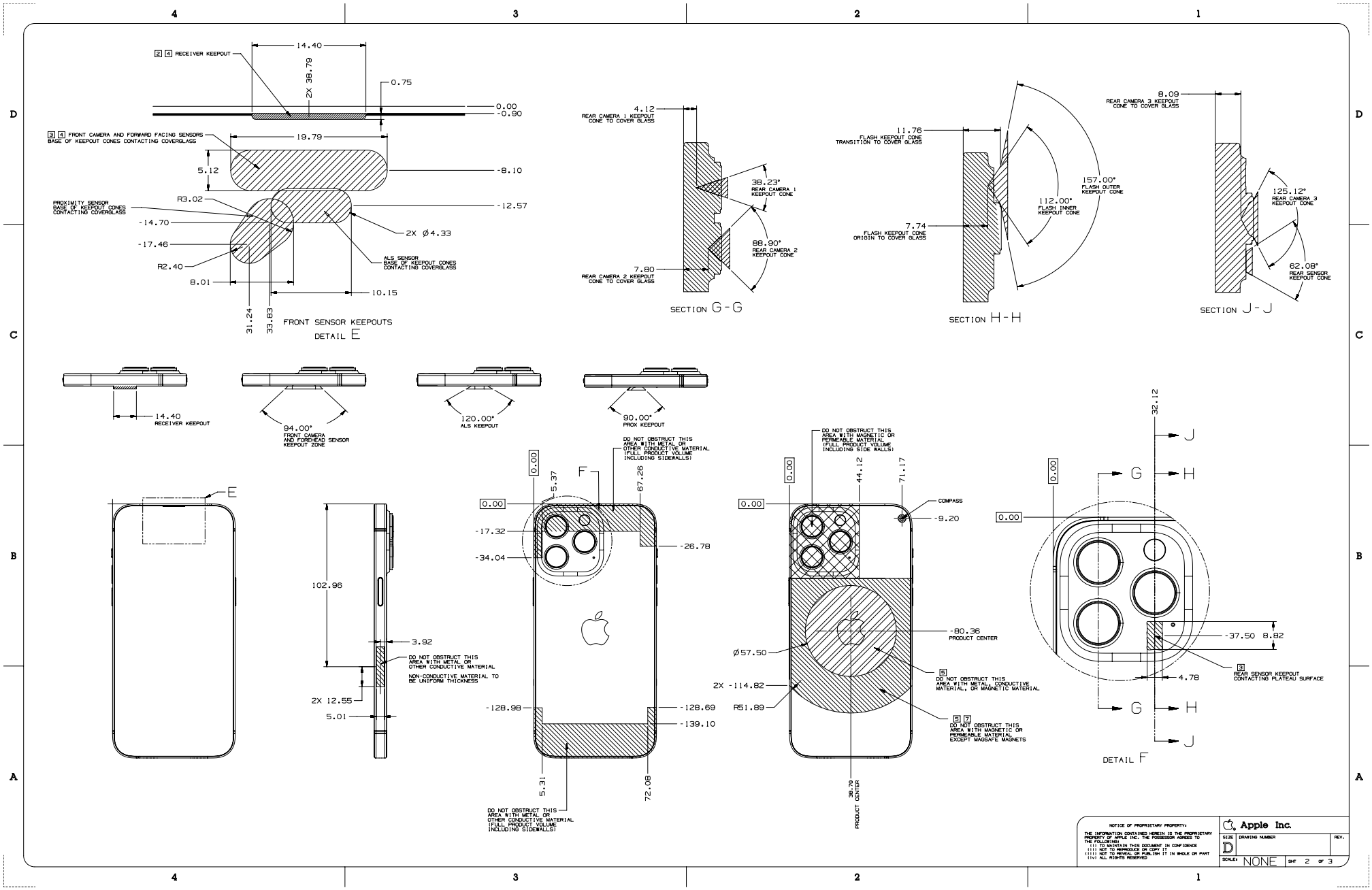

Copyright © 2023 Apple Inc. All Rights Reserved.

56.15 iPhone 14 Pro Max 3 of 3

[中文]

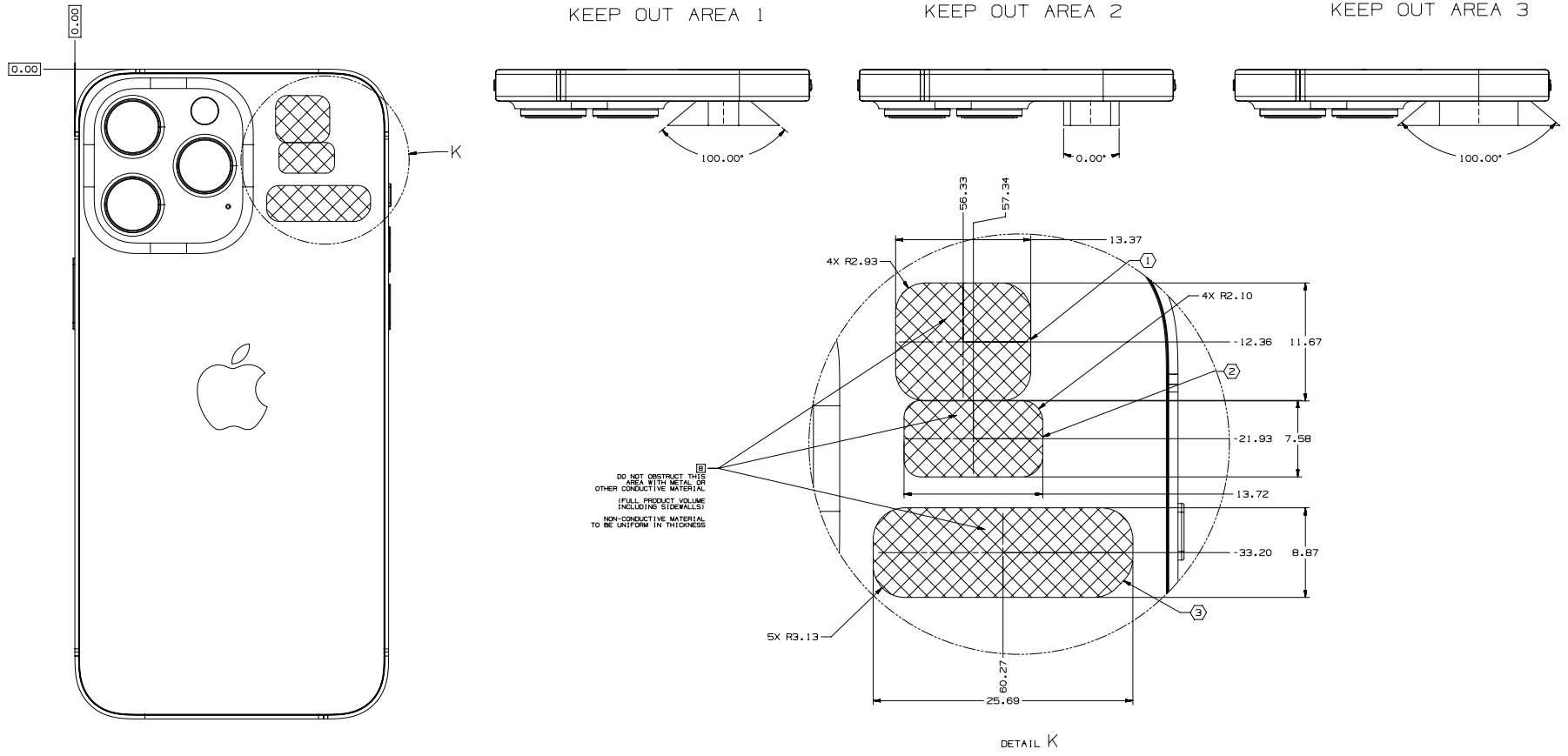

56.16 iPhone 14 Pro 1 of 3

[中文]

NOTES: (UNLESS OTHERWISE SPECIFIED)

1. NO METAL CONTACT WITH iPHONE.
2. DO NOT OBSTRUCT PORTS.
3. DO NOT OBSTRUCT THE IMAGING FEATURES: FRONT CAMERA, REAR CAMERAS, REAR FLASH.
4. DO NOT OBSTRUCT FORWARD FACING SENSORS.
5. RELATIVE MAGNETIC PERMEABILITY OF ANY METAL USED ON CASE: 1.05 MAX, PER ASTM A342/A342M-14.
6. DO NOT TOUCH GLASS.
7. NO MAGNETS ON REAR OF PRODUCT EXCEPT MAGSAFE MAGNETS.
8. CASE THICKNESS ON BACKSIDE OF PRODUCT: 2.1 mm MAX TO ENSURE FULL FUNCTIONALITY.

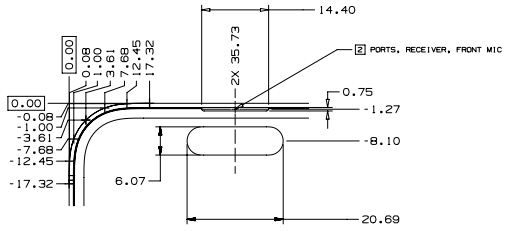

CORNER PROFILE (ALL FOUR CORNERS)
DETAIL A

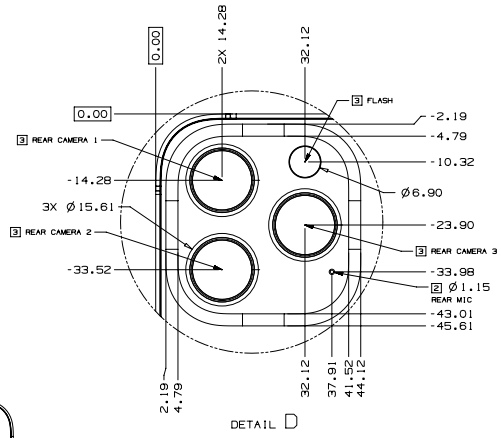

DETAIL D

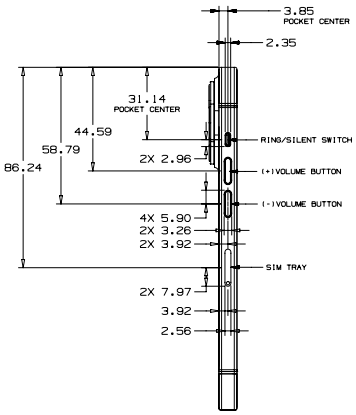

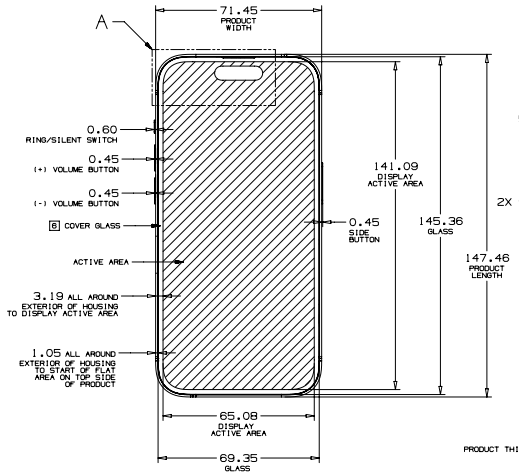

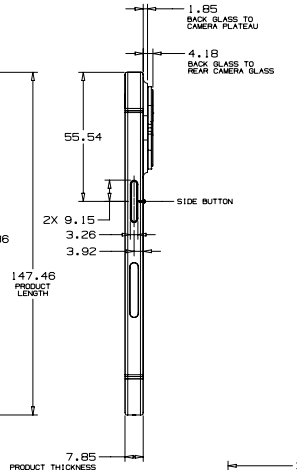

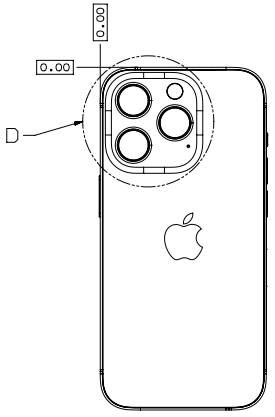

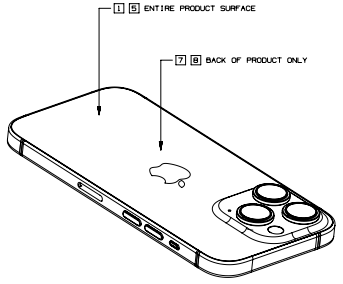

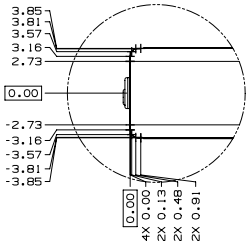

PROFILE (ALL SIDES)
DETAIL B

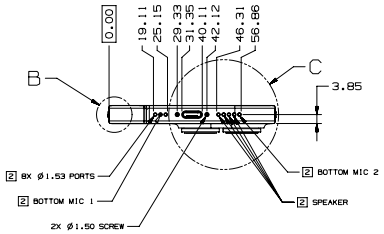

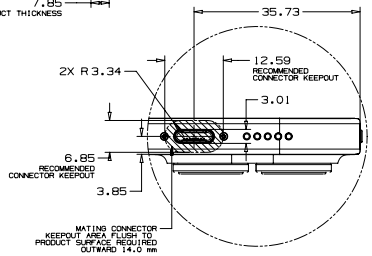

DETAIL C

METRIC	Apple Inc.
DRAWTER / DATE	NOTICE OF PROPRIETARY PROPERTY: THE INFORMATION CONTAINED HEREIN IS THE PROPRIETARY PROPERTY OF APPLE INC. THE POSSESSOR AGREES TO THE FOLLOWING: (i) TO MAINTAIN THIS DOCUMENT IN CONFIDENCE (ii) NOT TO REPRODUCE OR COPY IT (iii) NOT TO REVEAL OR PUBLISH IT IN WHOLE OR PART (iv) ALL RIGHTS RESERVED
DESIGNER / DATE	TITLE: IPHONE 14 PRO
DIMENSIONS ARE IN MILLIMETERS TOLERANCES 0 < - < 2 ±0.05 2 < - < 10 ±0.08 10 < - < 50 ±0.10 50 < - < 100 ±0.20 100 < - < 200 ±0.30 200 < - ±0.40 ANGLES ±0.50° DO NOT SCALE DRAWING	DRAWING NUMBER / REV.
THIRD ANGLE PROJECTION / SIZE D	SCALE NONE / SHT 1 OF 3

NX GENERATED

Copyright © 2023 Apple Inc. All Rights Reserved.

56.17 iPhone 14 Pro 2 of 3

[中文]

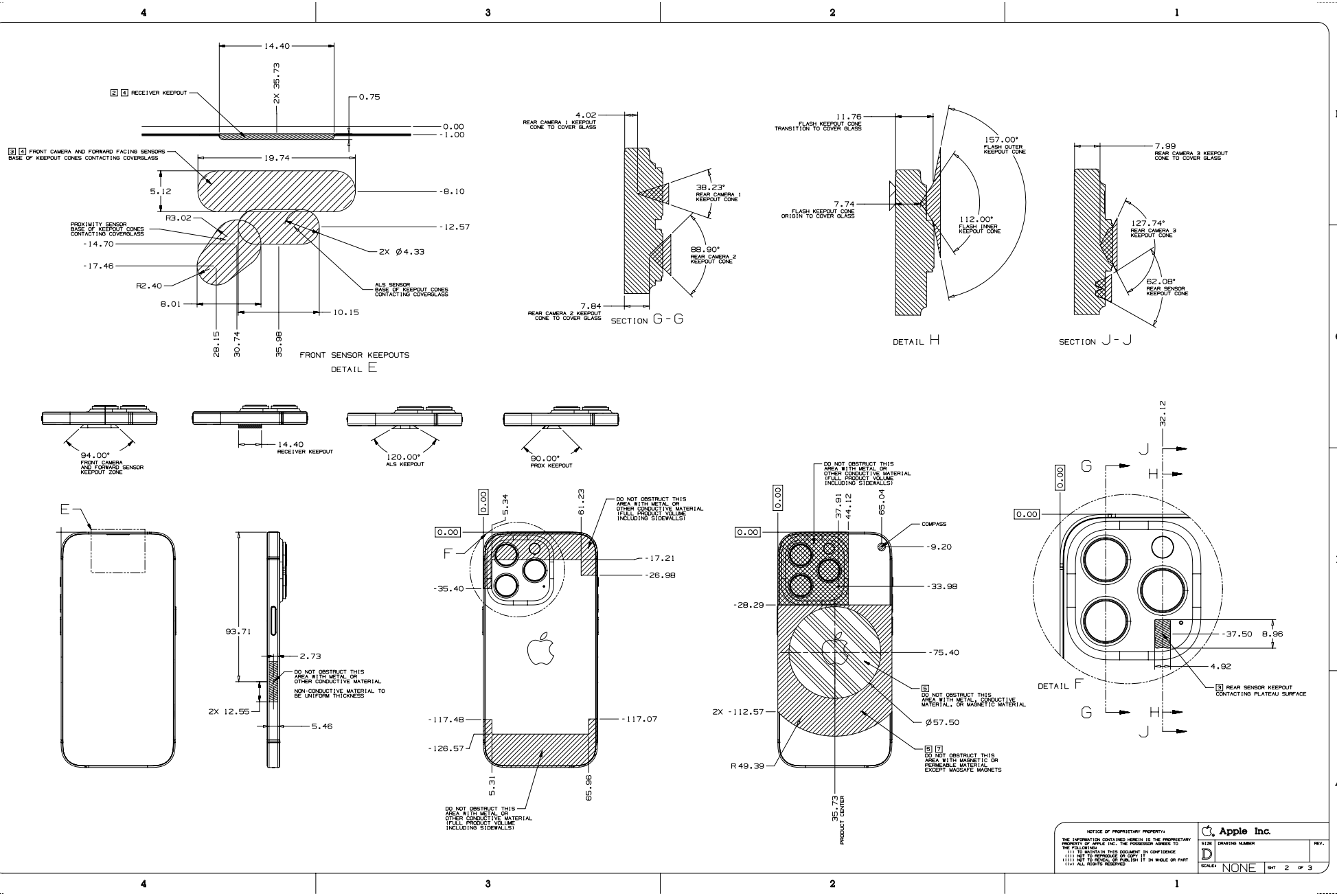

56.18 iPhone 14 Pro 3 of 3

[中文]

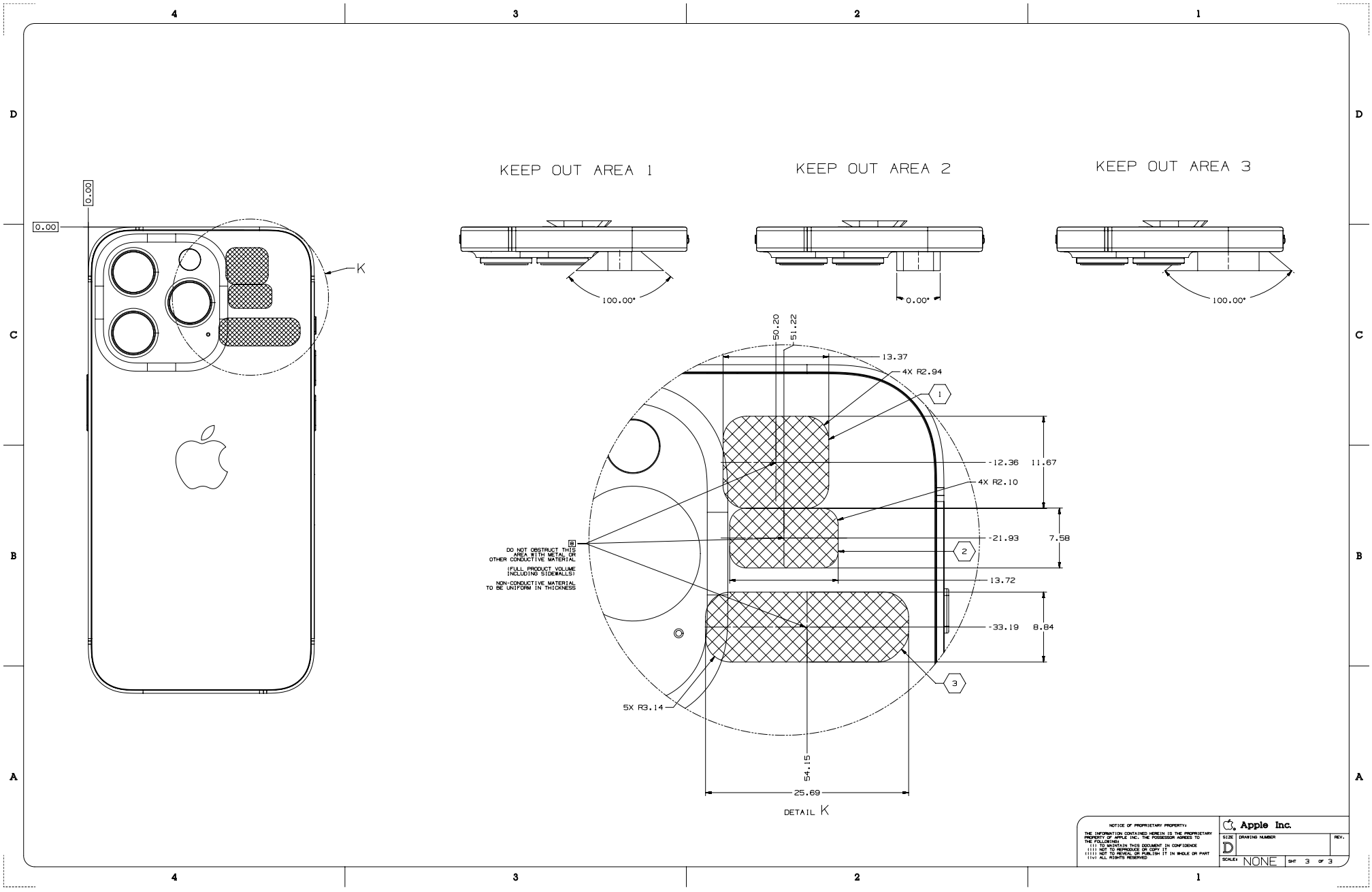

Copyright © 2023 Apple Inc. All Rights Reserved.

56.19 iPhone 14 Plus 1 of 3

[中文]

NOTES: (UNLESS OTHERWISE SPECIFIED)

1. NO METAL CONTACT WITH iPHONE.
2. DO NOT OBSTRUCT PORTS.
3. DO NOT OBSTRUCT THE IMAGING FEATURES: FRONT CAMERA, REAR CAMERAS, REAR FLASH.
4. DO NOT OBSTRUCT FORWARD FACING SENSORS.
5. RELATIVE MAGNETIC PERMEABILITY OF ANY METAL USED ON CASE: 1.05 MAX, PER ASTM A342/A342M-14.
6. DO NOT TOUCH GLASS.
7. NO MAGNETS ON REAR OF PRODUCT EXCEPT MAGSAFE MAGNETS.
8. CASE THICKNESS ON BACKSIDE OF PRODUCT: 2.1 mm MAX TO ENSURE FULL FUNCTIONALITY.

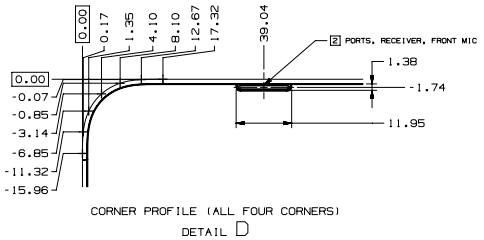

CORNER PROFILE (ALL FOUR CORNERS)
DETAIL D

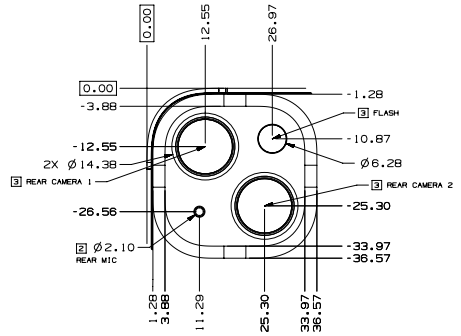

DETAIL A

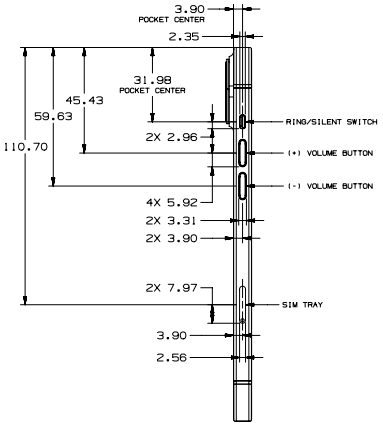

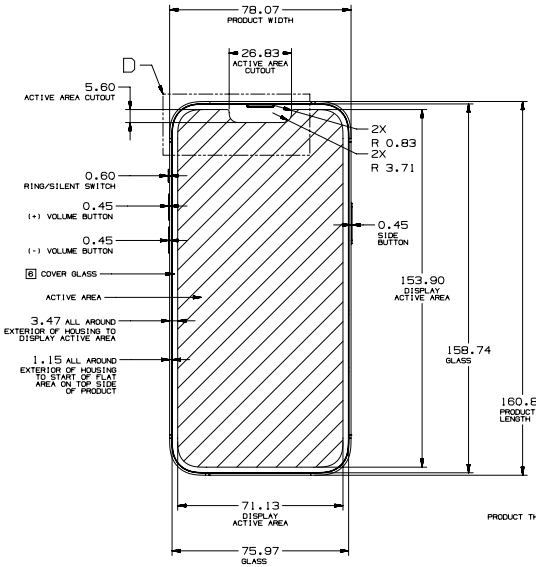

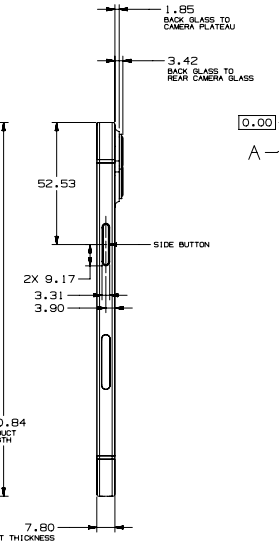

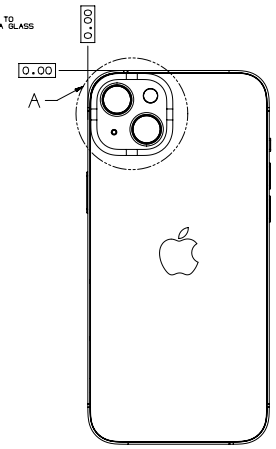

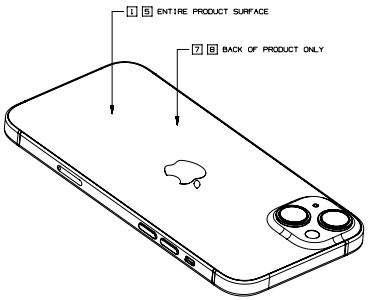

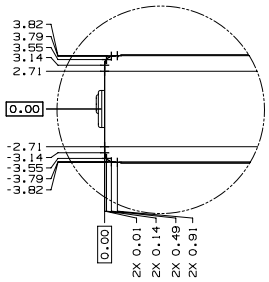

DETAIL B

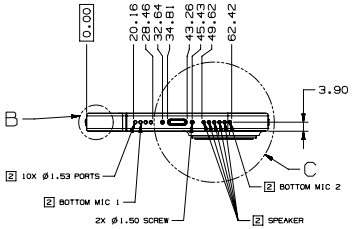

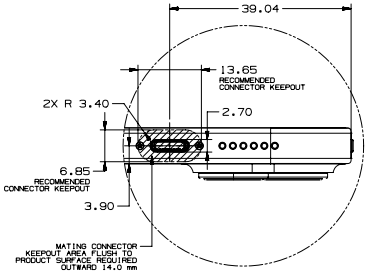

DETAIL C

METRIC	Apple Inc.
DRAFTER / DATE	NOTICE OF PROPRIETARY PROPERTY: THE INFORMATION CONTAINED HEREIN IS THE PROPRIETARY PROPERTY OF APPLE INC. THE POSSESSOR AGREES TO THE FOLLOWING: (i) TO MAINTAIN THIS DOCUMENT IN CONFIDENCE (ii) NOT TO REPRODUCE OR COPY IT (iii) NOT TO REVERSE ENGINEER OR PUBLISH IT IN WHOLE OR PART (iv) ALL RIGHTS RESERVED
DESIGNER / DATE	
DIMENSIONS ARE IN MILLIMETERS TOLERANCES 0 < - < 2 ±0.05 2 < - < 10 ±0.08 10 < - < 50 ±0.10 50 < - < 100 ±0.20 100 < - < 200 ±0.30 200 < - ±0.40 ANGLES ±0.50° DO NOT SCALE DRAWING	TITLE: IPHONE 14 PLUS
THIRD ANGLE PROJECTION	DRAWING NUMBER / REV.
SIZE D	SCALE NONE
	SHT 1 OF 3

NX GENERATED

56.20 iPhone 14 Plus 2 of 3

[中文]

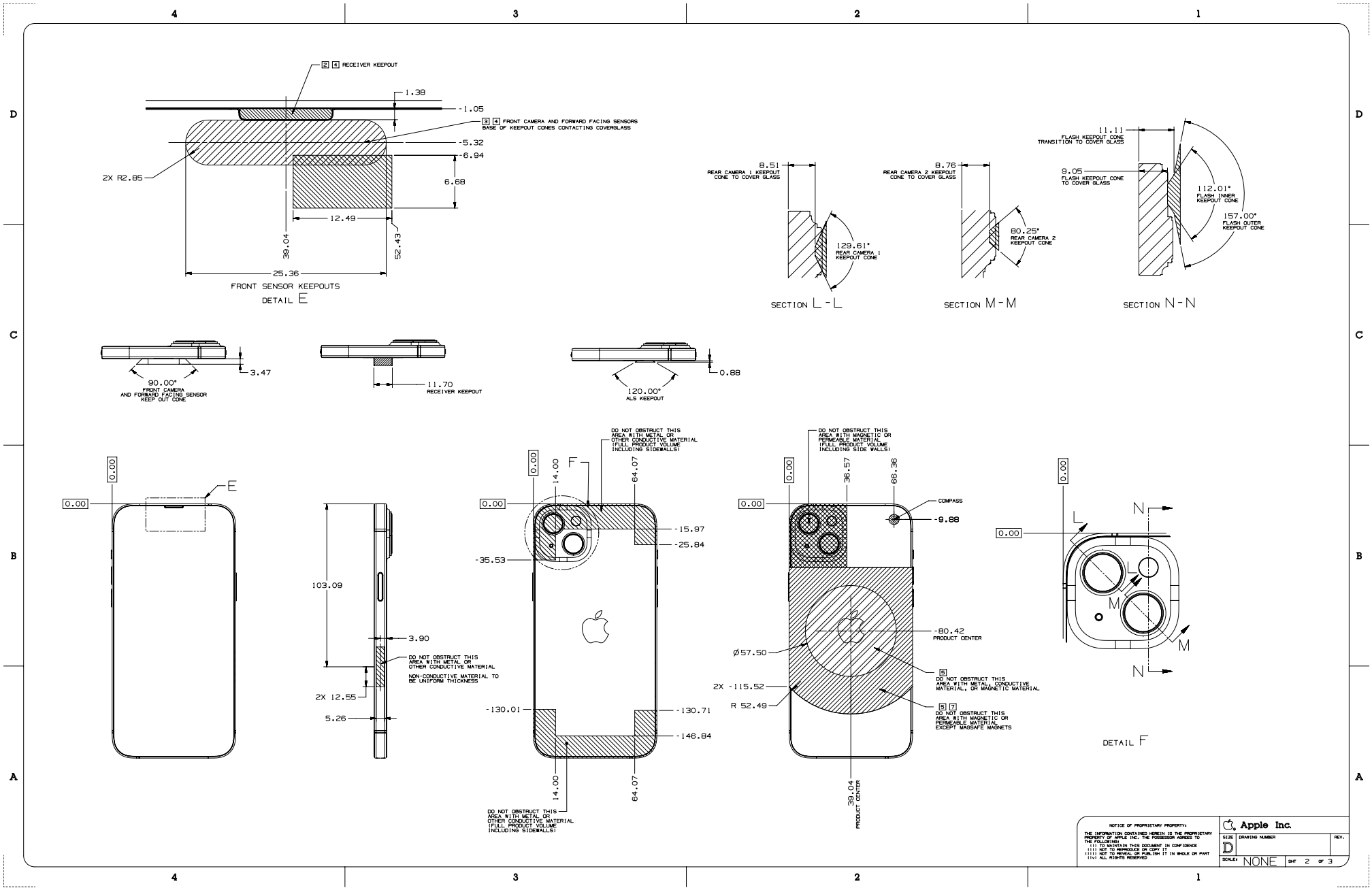

56.21 iPhone 14 Plus 3 of 3

[中文]

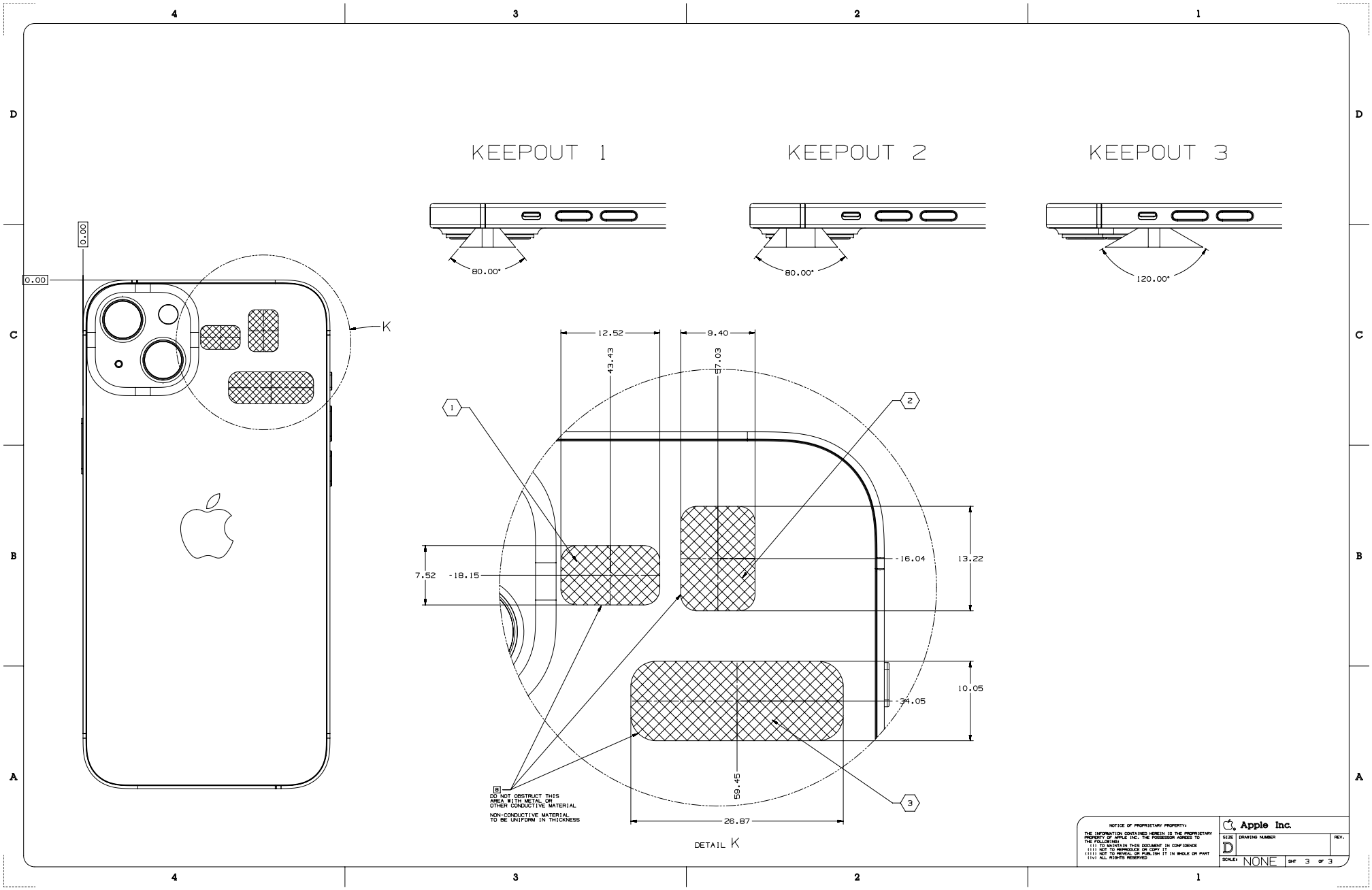

Copyright © 2023 Apple Inc. All Rights Reserved.

NOTES: (UNLESS OTHERWISE SPECIFIED)

1. NO METAL CONTACT WITH iPHONE.
2. DO NOT OBSTRUCT PORTS.
3. DO NOT OBSTRUCT THE IMAGING FEATURES: FRONT CAMERA, REAR CAMERAS, REAR FLASH.
4. DO NOT OBSTRUCT FORWARD FACING SENSORS.
5. RELATIVE MAGNETIC PERMEABILITY OF ANY METAL USED ON CASE: 1.05 MAX, PER ASTM A342/A342M-14.
6. DO NOT TOUCH GLASS.
7. NO MAGNETS ON REAR OF PRODUCT EXCEPT MAGSAFE MAGNETS.
8. CASE THICKNESS ON BACKSIDE OF PRODUCT: 2.1 mm MAX TO ENSURE FULL FUNCTIONALITY.

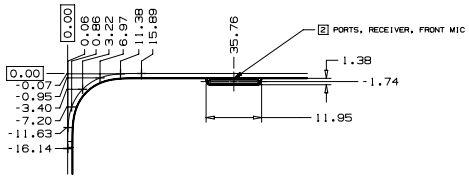

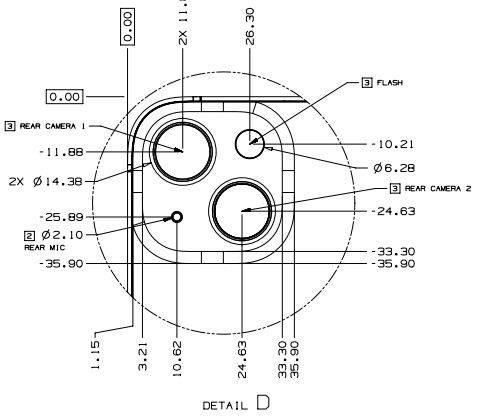

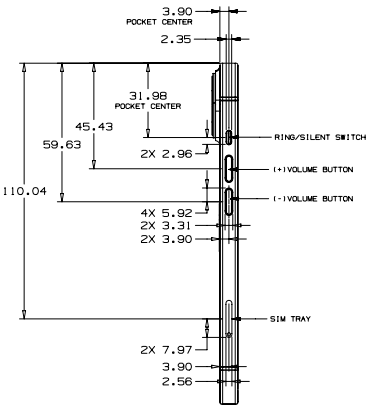

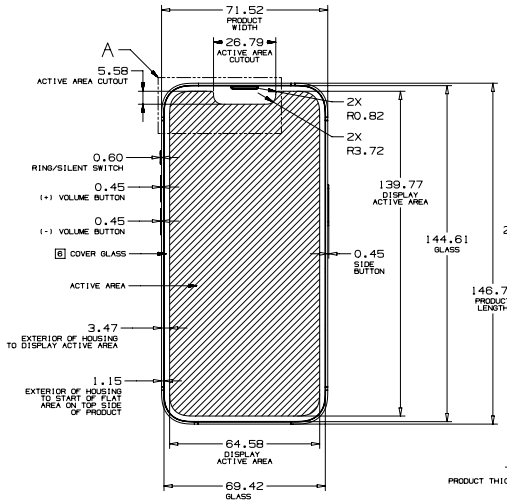

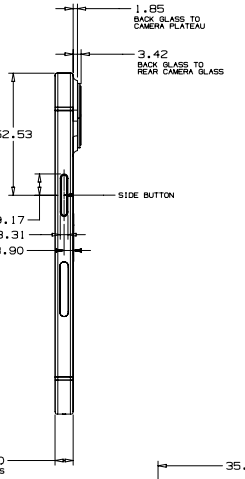

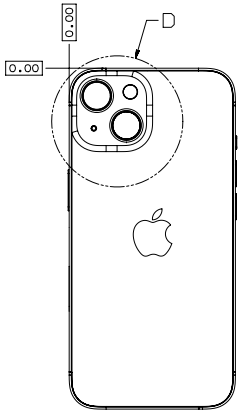

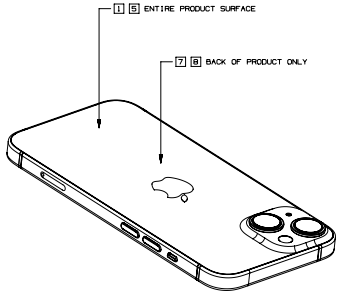

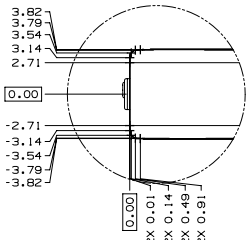

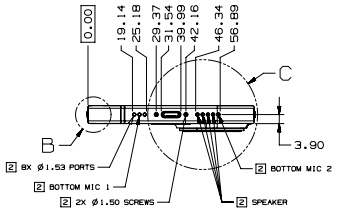

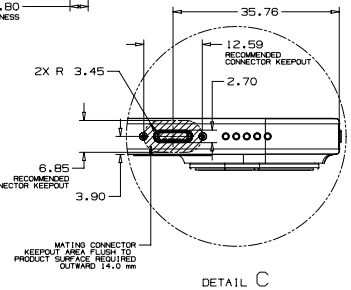

METRIC	Apple Inc.
DRAWTER / DESIGNER	NOTICE OF PROPRIETARY PROPERTY: THE INFORMATION CONTAINED HEREIN IS THE PROPRIETARY PROPERTY OF APPLE INC. THE POSSESSOR AGREES TO THE FOLLOWING: (i) TO MAINTAIN THIS DOCUMENT IN CONFIDENCE (ii) NOT TO REPRODUCE OR COPY IT (iii) NOT TO REVEAL OR PUBLISH IT IN WHOLE OR PART (iv) ALL RIGHTS RESERVED
DIMENSIONS ARE IN MILLIMETERS. TOLERANCES: 0 < - < 2 ±0.05; 2 < - < 10 ±0.08; 10 < - < 50 ±0.10; 50 < - < 100 ±0.20; 100 < - < 200 ±0.30; 200 < - ±0.40; ANGLES ±0.50°. DO NOT SCALE DRAWING	TITLE: IPHONE 14
THIRD ANGLE PROJECTION; SIZE D	DRAWING NUMBER; REV.; SCALE NONE; SHT 1 OF 3

NX GENERATED

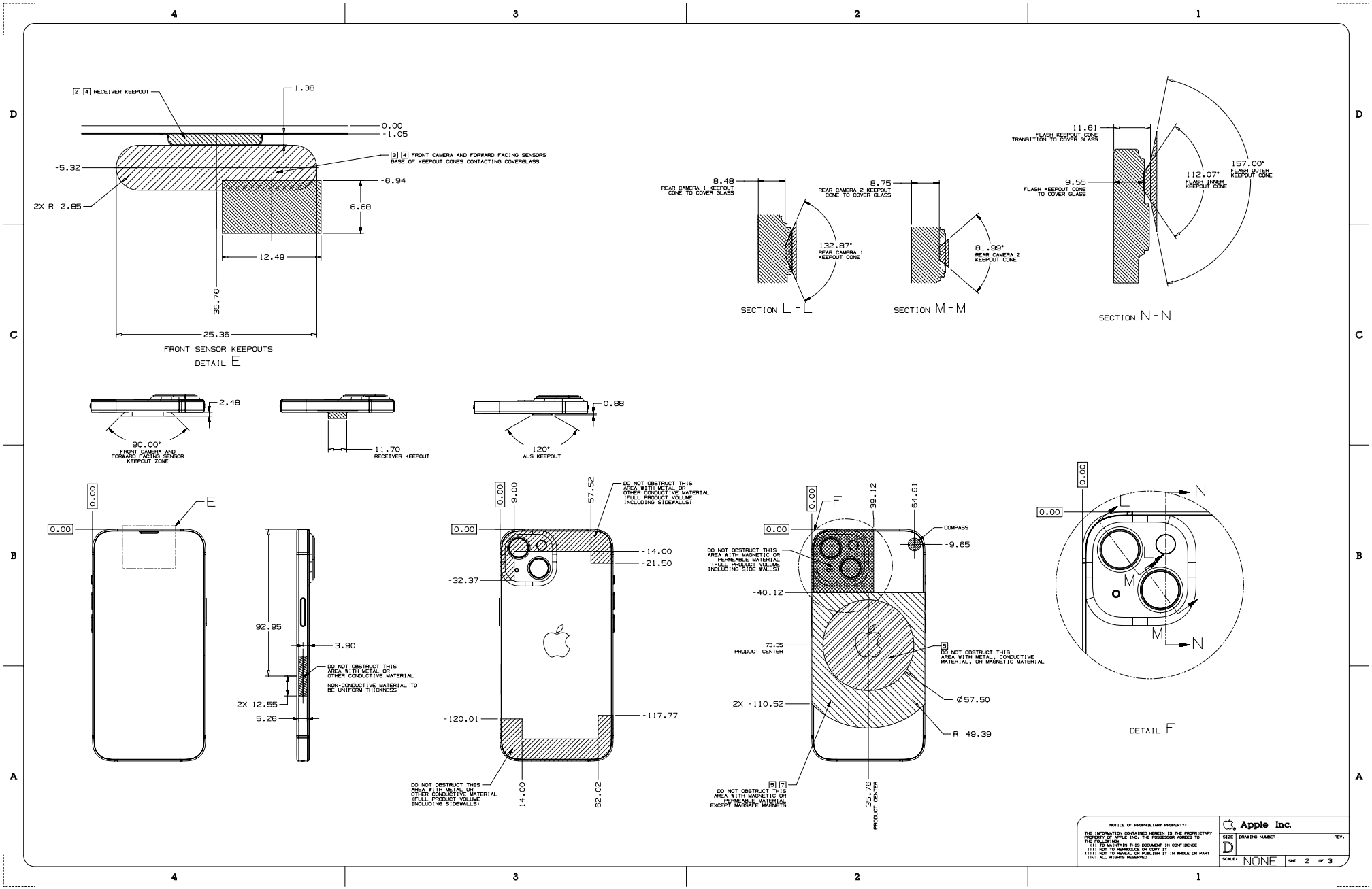
[2] [4] RECEIVER KEEPOUT
1.38
0.00
-1.05
[3] [4] FRONT CAMERA AND FORWARD FACING SENSORS BASE OF KEEPOUT CONES CONTACTING COVERGLASS
-5.32
-6.94
2X R 2.85
6.68
12.49
35.76
25.36
FRONT SENSOR KEEPOUTS
DETAIL E
8.48
REAR CAMERA 1 KEEPOUT CONE TO COVER GLASS
132.87°
REAR CAMERA 1 KEEPOUT CONE
SECTION L - L
8.75
REAR CAMERA 2 KEEPOUT CONE TO COVER GLASS
81.99°
REAR CAMERA 2 KEEPOUT CONE
SECTION M - M
11.61
FLASH KEEPOUT CONE TRANSITION TO COVER GLASS
9.55
FLASH KEEPOUT CONE TO COVER GLASS
112.07°
FLASH INNER KEEPOUT CONE
157.00°
FLASH OUTER KEEPOUT CONE
SECTION N - N
2.48
90.00°
FRONT CAMERA AND FORWARD FACING SENSOR KEEPOUT ZONE
11.70
RECEIVER KEEPOUT
0.88
120°
ALS KEEPOUT
0.00
E
92.95
3.90
DO NOT OBSTRUCT THIS AREA WITH METAL OR OTHER CONDUCTIVE MATERIAL
NON-CONDUCTIVE MATERIAL TO BE UNIFORM THICKNESS
2X 12.55
5.26
9.00
57.52
DO NOT OBSTRUCT THIS AREA WITH METAL OR OTHER CONDUCTIVE MATERIAL (FULL PRODUCT VOLUME INCLUDING SIDEWALLS)
-14.00
-21.50
-32.37
-120.01
-117.77
DO NOT OBSTRUCT THIS AREA WITH METAL OR OTHER CONDUCTIVE MATERIAL (FULL PRODUCT VOLUME INCLUDING SIDEWALLS)
14.00
62.02
F
39.12
64.91
COMPASS
-9.65
DO NOT OBSTRUCT THIS AREA WITH MAGNETIC OR PERMEABLE MATERIAL (FULL PRODUCT VOLUME INCLUDING SIDE WALLS)
-40.12
-73.35
PRODUCT CENTER
[5] DO NOT OBSTRUCT THIS AREA WITH METAL, CONDUCTIVE MATERIAL, OR MAGNETIC MATERIAL
2X -110.52
Ø57.50
R 49.39
[5] [7] DO NOT OBSTRUCT THIS AREA WITH MAGNETIC OR PERMEABLE MATERIAL EXCEPT MAGSAFE MAGNETS
35.76
PRODUCT CENTER
L
N
M
DETAIL F
NOTICE OF PROPRIETARY PROPERTY:
THE INFORMATION CONTAINED HEREIN IS THE PROPRIETARY PROPERTY OF APPLE INC. THE POSSESSOR AGREES TO THE FOLLOWING:
(i) TO MAINTAIN THIS DOCUMENT IN CONFIDENCE
(ii) NOT TO REPRODUCE OR COPY IT
(iii) NOT TO REVEAL OR PUBLISH IT IN WHOLE OR PART
(iv) ALL RIGHTS RESERVED
Apple Inc.
SIZE D
DRAWING NUMBER
REV.
SCALE: NONE
SHT 2 OF 3

56.24 iPhone 14 3 of 3

[中文]

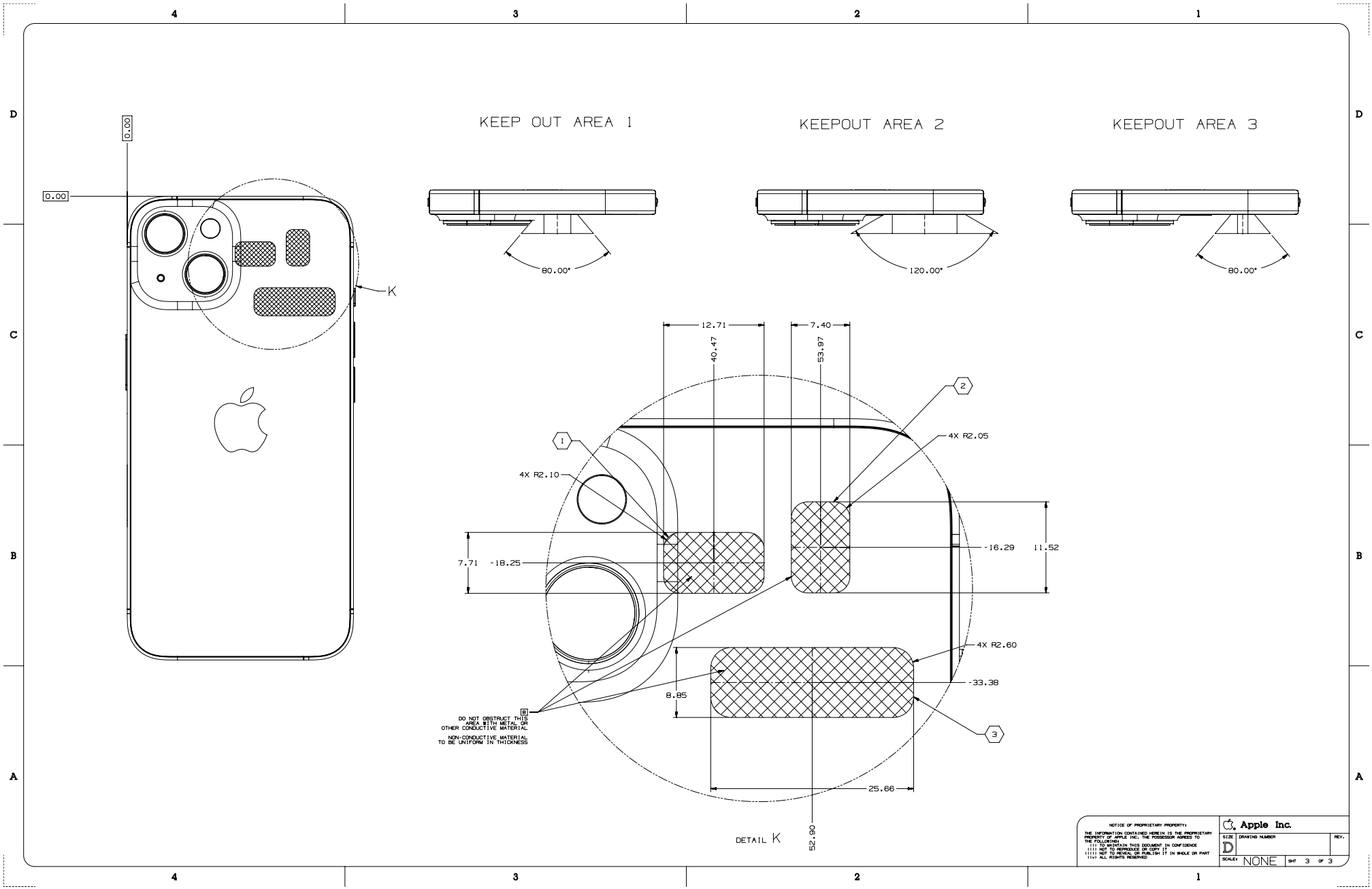

Copyright © 2023 Apple Inc. All Rights Reserved.

56.25 iPhone 13 Pro Max 1 of 2

[中文]

NOTES: (UNLESS OTHERWISE SPECIFIED)

1. NO METAL CONTACT WITH IPHONE.
2. DO NOT OBSTRUCT PORTS.
3. DO NOT OBSTRUCT THE IMAGING FEATURES: FRONT CAMERA, REAR CAMERAS, REAR FLASH.
4. DO NOT OBSTRUCT FORWARD FACING SENSORS.
5. RELATIVE MAGNETIC PERMEABILITY OF ANY METAL USED ON CASE: 1.05 MAX, PER ASTM A342/A342M-14.
6. DO NOT TOUCH GLASS.
7. NO MAGNETS ON REAR OF PRODUCT EXCEPT MAGSAFE MAGNETS.
8. CASE THICKNESS ON BACKSIDE OF PRODUCT: 2.1 mm MAX TO ENSURE FULL FUNCTIONALITY.

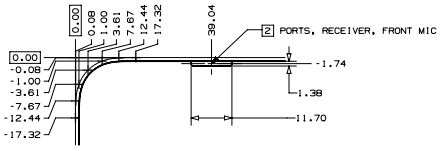

CORNER PROFILE (ALL FOUR CORNERS)
DETAIL A

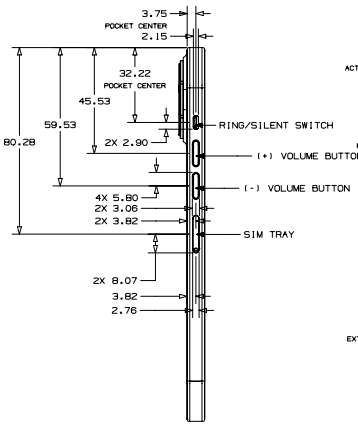

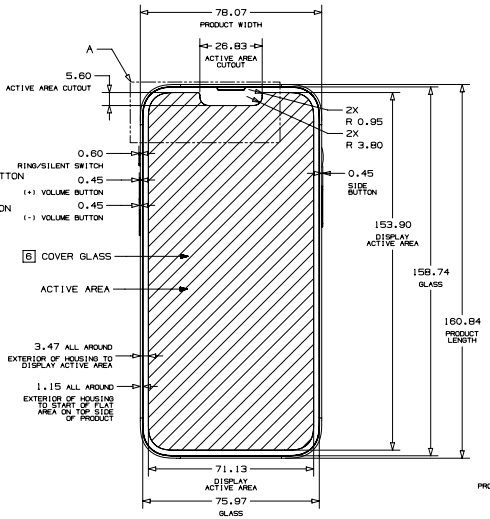

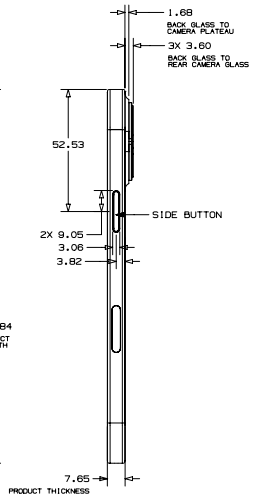

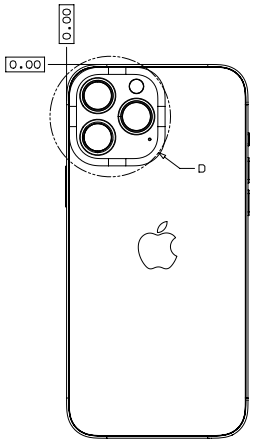

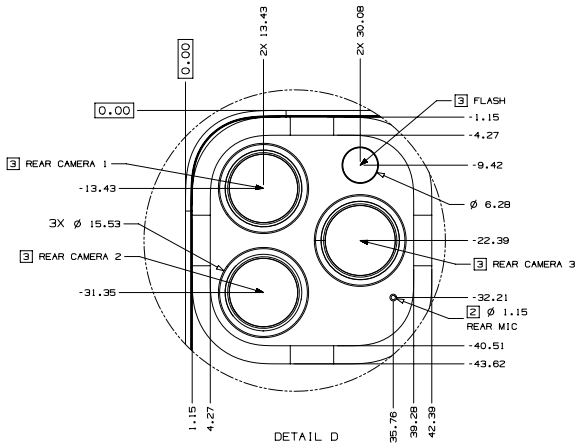

DETAIL D

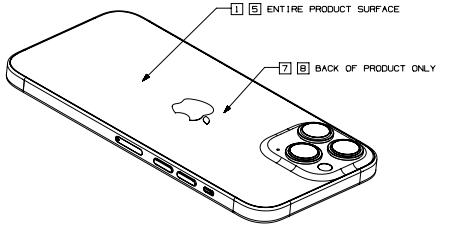

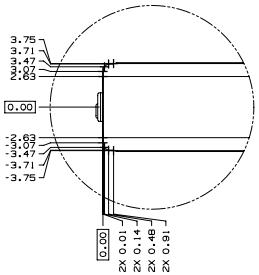

PROFILE (ALL SIDES)
DETAIL B

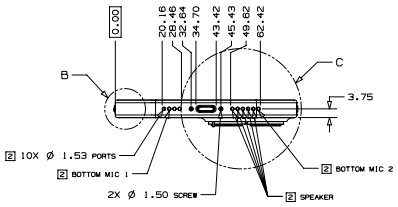

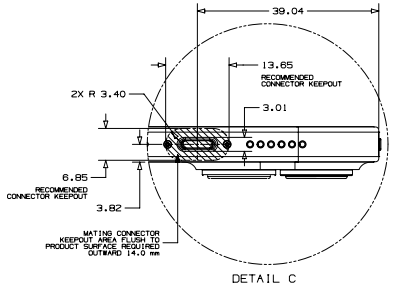

DETAIL C

METRIC		Apple Inc.	
DRAFTER	DATE	NOTICE OF PROPRIETARY PROPERTY: THE INFORMATION CONTAINED HEREIN IS THE PROPRIETARY PROPERTY OF APPLE INC. THE POSSESSOR AGREES TO THE FOLLOWING: (i) TO MAINTAIN THIS DOCUMENT IN CONFIDENCE (ii) NOT TO REPRODUCE OR COPY IT (iii) NOT TO REVEAL OR PUBLISH IT IN WHOLE OR PART (iv) ALL RIGHTS RESERVED	
DESIGNER	DATE		
0 < - < 2 ±0.05 2 < - < 10 ±0.08 10 < - < 50 ±0.10 50 < - < 100 ±0.20 100 < - < 200 ±0.30 200 < - ±0.40 ANGLES ±0.50°		TITLE: iPhone 13 Pro Max	
		DRAWING NUMBER	REV.
THIRD ANGLE PROJECTION	SIZE D	SCALE NONE	SHT 1 OF 2

NX GENERATED

Copyright © 2023 Apple Inc. All Rights Reserved.

56.26 iPhone 13 Pro Max 2 of 2

[中文]

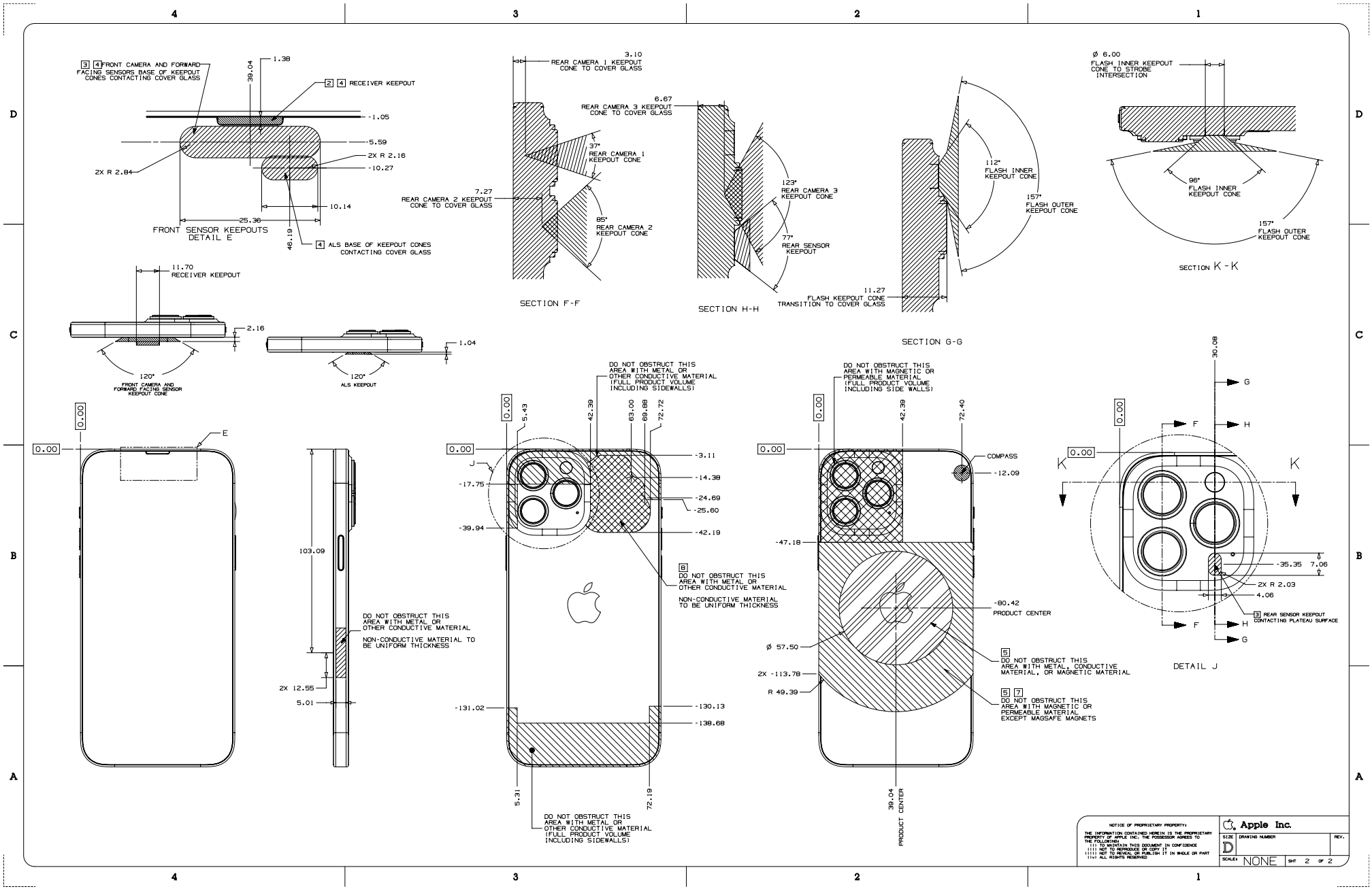

Copyright © 2023 Apple Inc. All Rights Reserved.

56.27 iPhone 13 Pro 1 of 2

[中文]

NOTES: (UNLESS OTHERWISE SPECIFIED)

1. NO METAL CONTACT WITH IPHONE.
2. DO NOT OBSTRUCT PORTS.
3. DO NOT OBSTRUCT THE IMAGING FEATURES: FRONT CAMERA, REAR CAMERAS, REAR FLASH.
4. DO NOT OBSTRUCT FORWARD FACING SENSORS.
5. RELATIVE MAGNETIC PERMEABILITY OF ANY METAL USED ON CASE: 1.05 MAX, PER ASTM A342/A342M-14.
6. DO NOT TOUCH GLASS.
7. NO MAGNETS ON REAR OF PRODUCT EXCEPT MAGSAFE MAGNETS.
8. CASE THICKNESS ON BACKSIDE OF PRODUCT: 2.1 mm MAX TO ENSURE FULL FUNCTIONALITY.

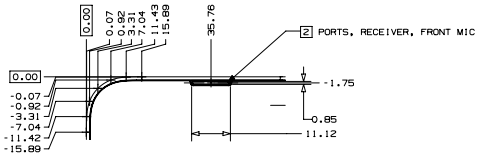

CORNER PROFILE (ALL FOUR CORNERS)
DETAIL A

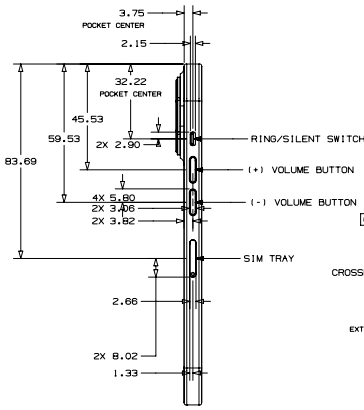

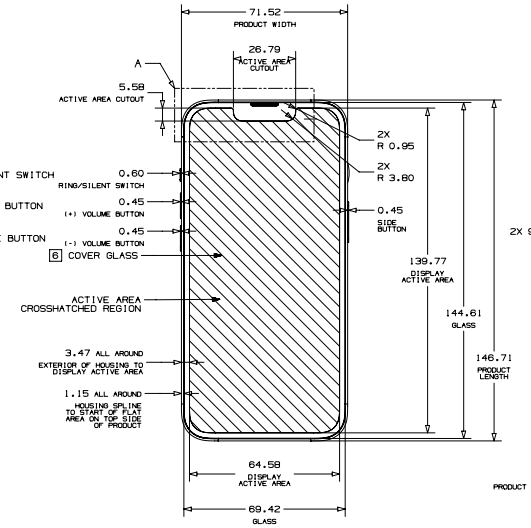

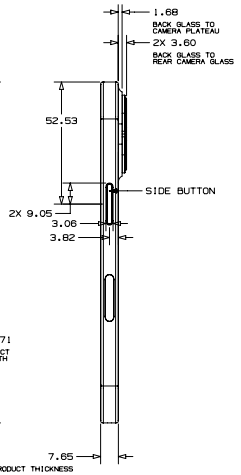

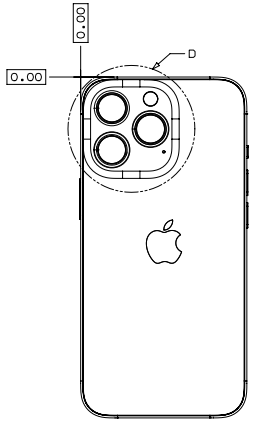

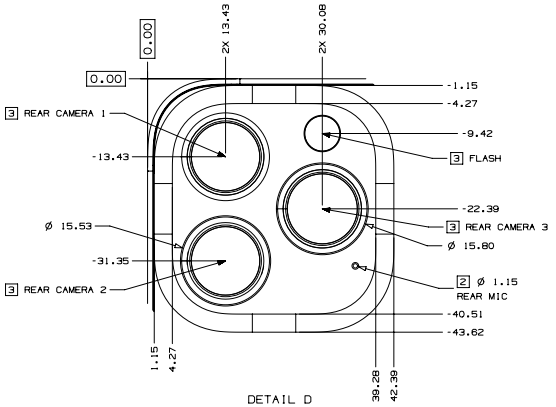

DETAIL D

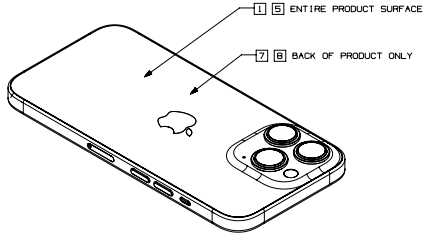

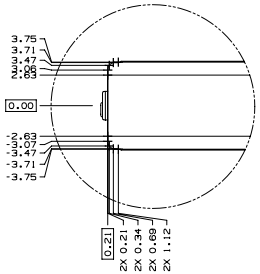

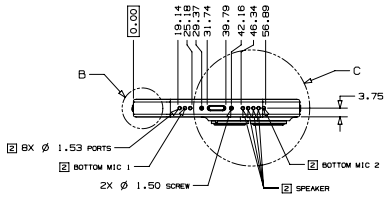

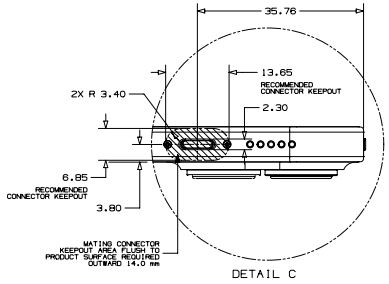

METRIC	Apple Inc.
DRAFTER: APPLE INC. — DATE: 05/14/21	NOTICE OF PROPRIETARY PROPERTY: THE INFORMATION CONTAINED HEREIN IS THE PROPRIETARY PROPERTY OF APPLE INC. THE POSSESSOR AGREES TO THE FOLLOWING: (i) TO MAINTAIN THIS DOCUMENT IN CONFIDENCE (ii) NOT TO REPRODUCE OR COPY IT (iii) NOT TO REVEAL OR PUBLISH IT IN WHOLE OR PART (iv) ALL RIGHTS RESERVED
DESIGNER: APPLE INC. — DATE: 05/14/21	
0 < - < 2 ±0.05 2 < - < 10 ±0.08 10 < - < 50 ±0.10 50 < - < 100 ±0.20 100 < - < 200 ±0.30 200 < - ±0.40 ANGLES ±0.50°	TITLE: iPhone 13 Pro
	DRAWING NUMBER — REV.
THIRD ANGLE PROJECTION — SIZE D — SCALE NONE — SHT 1 OF 2	

NX GENERATED

56.28 iPhone 13 Pro 2 of 2

[中文]

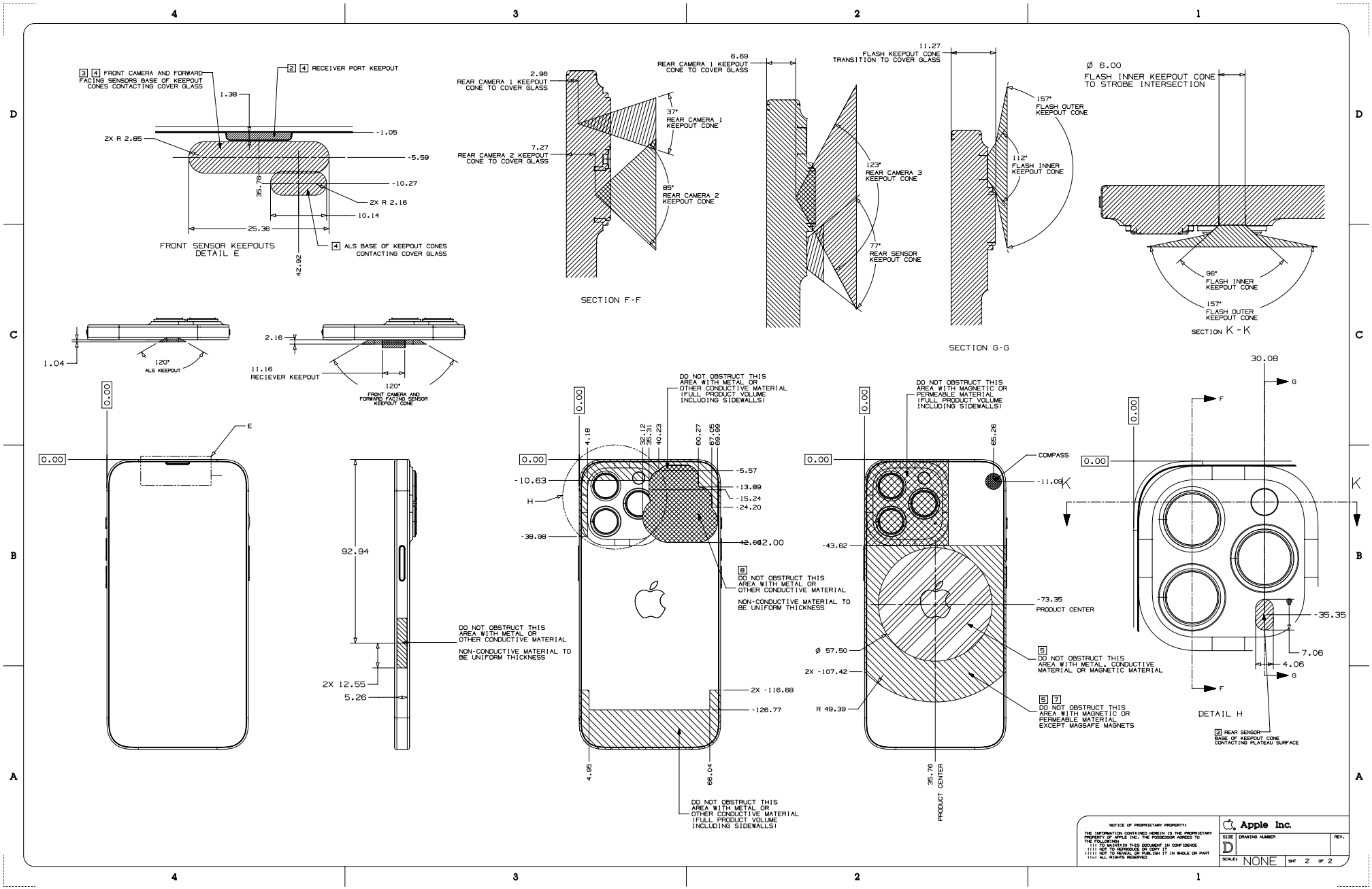

Copyright © 2023 Apple Inc. All Rights Reserved.

56.29 iPhone 13 1 of 2

[中文]

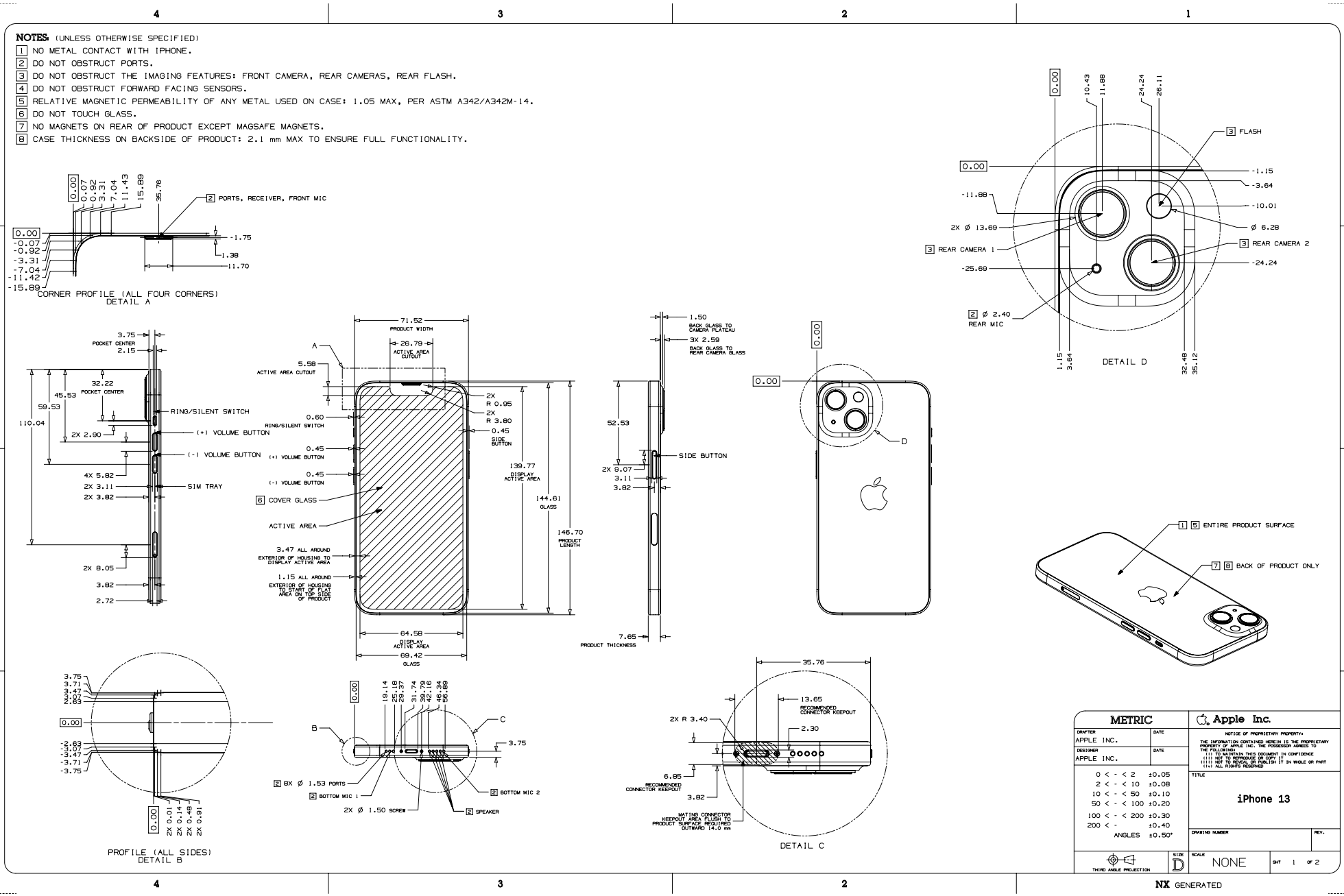

Copyright © 2023 Apple Inc. All Rights Reserved.

56.30 iPhone 13 2 of 2

[中文]

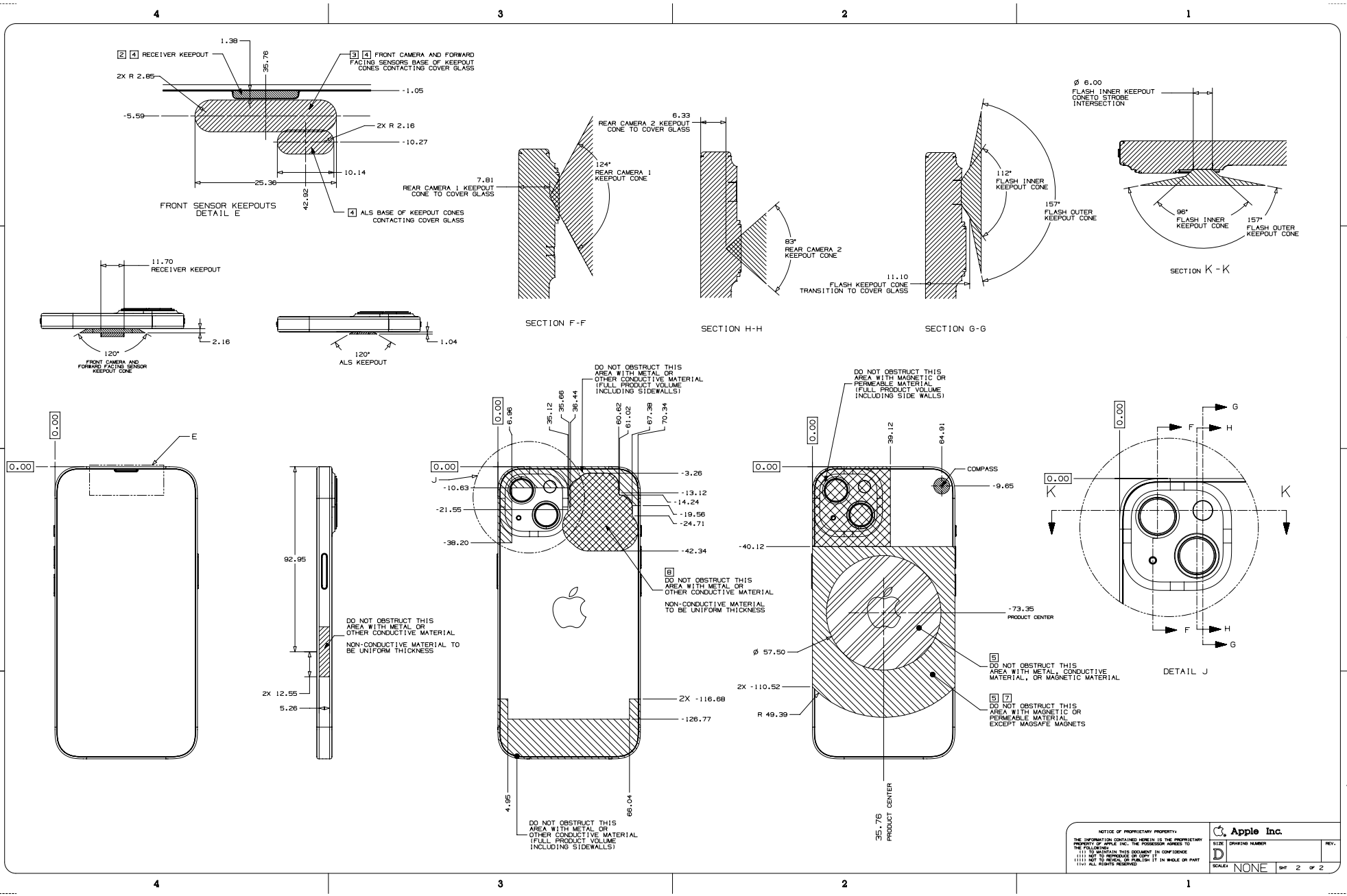

Copyright © 2023 Apple Inc. All Rights Reserved.

56.31 iPhone 13 mini 1 of 2

[中文]

NOTES: (UNLESS OTHERWISE SPECIFIED)

1. NO METAL CONTACT WITH IPHONE.
2. DO NOT OBSTRUCT PORTS.
3. DO NOT OBSTRUCT THE IMAGING FEATURES: FRONT CAMERA, REAR CAMERAS, REAR FLASH.
4. DO NOT OBSTRUCT FORWARD FACING SENSORS.
5. RELATIVE MAGNETIC PERMEABILITY OF ANY METAL USED ON CASE: 1.05 MAX, PER ASTM A342/A342M-14.
6. DO NOT TOUCH GLASS.
7. NO MAGNETS ON REAR OF PRODUCT EXCEPT MAGSAFE MAGNETS.
8. CASE THICKNESS ON BACKSIDE OF PRODUCT: 2.1 mm MAX TO ENSURE FULL FUNCTIONALITY.

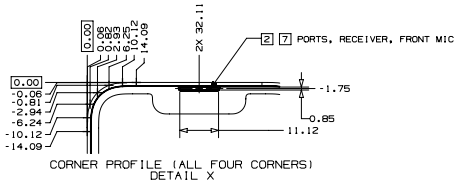

CORNER PROFILE (ALL FOUR CORNERS)
DETAIL X

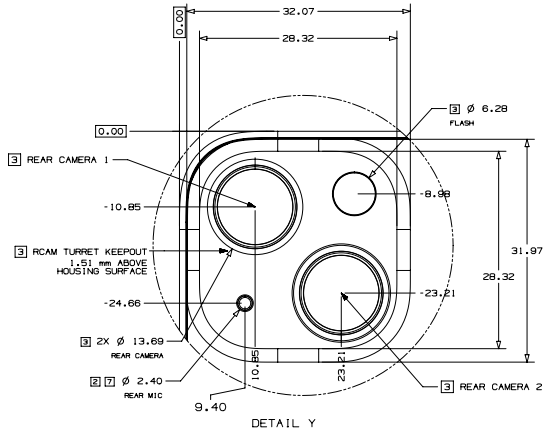

DETAIL Y

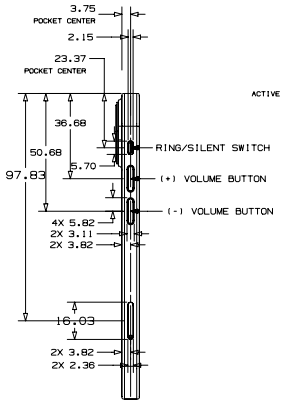

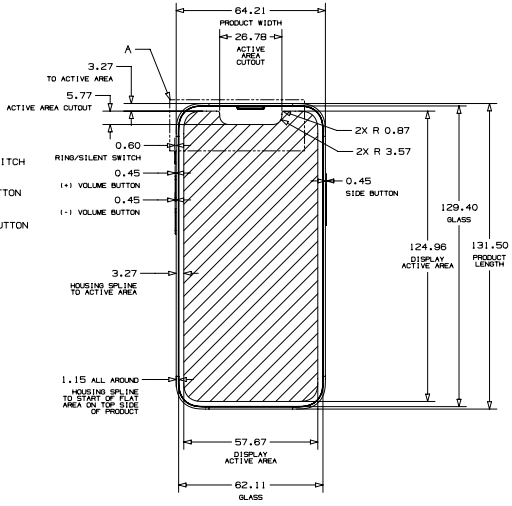

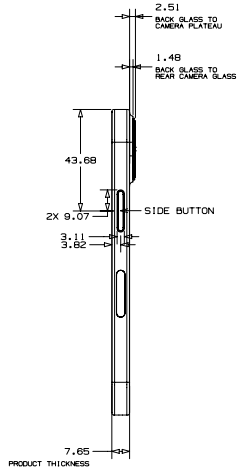

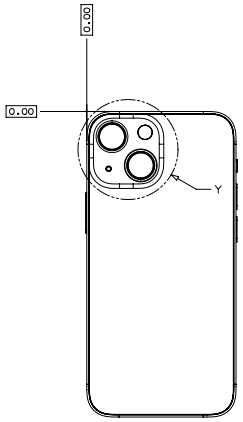

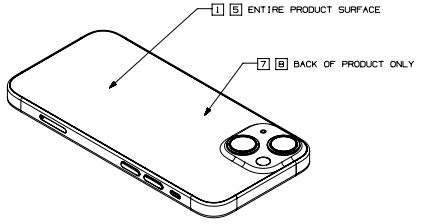

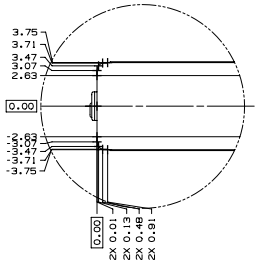

PROFILE (ALL SIDES)
DETAIL AA

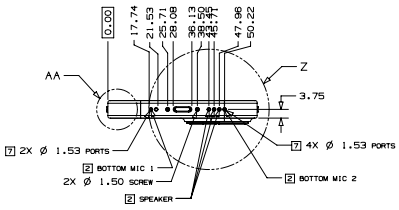

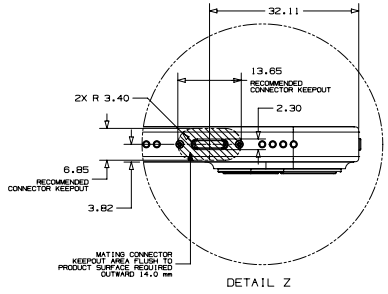

DETAIL Z

METRIC	Apple Inc.
DRAFTER: APPLE INC. — DATE: 05/14/21	NOTICE OF PROPRIETARY PROPERTY: THE INFORMATION CONTAINED HEREIN IS THE PROPRIETARY PROPERTY OF APPLE INC. THE POSSESSOR AGREES TO THE FOLLOWING: (i) TO MAINTAIN THIS DOCUMENT IN CONFIDENCE (ii) NOT TO REPRODUCE OR COPY IT (iii) NOT TO REVERSE ENGINEER OR PUBLISH IT IN WHOLE OR PART (iv) ALL RIGHTS RESERVED
DESIGNER: APPLE INC. — DATE: 05/14/21	TITLE: iPhone 13 mini
0 < - < 2 ±0.05 2 < - < 10 ±0.08 10 < - < 50 ±0.10 50 < - < 100 ±0.20 100 < - < 200 ±0.30 200 < - ±0.40 ANGLES ±0.50°	DRAWING NUMBER — REV.
THIRD ANGLE PROJECTION — SIZE D	SCALE NONE — SHT 1 OF 2

NX GENERATED

56.32 iPhone 13 mini 2 of 2

[中文]

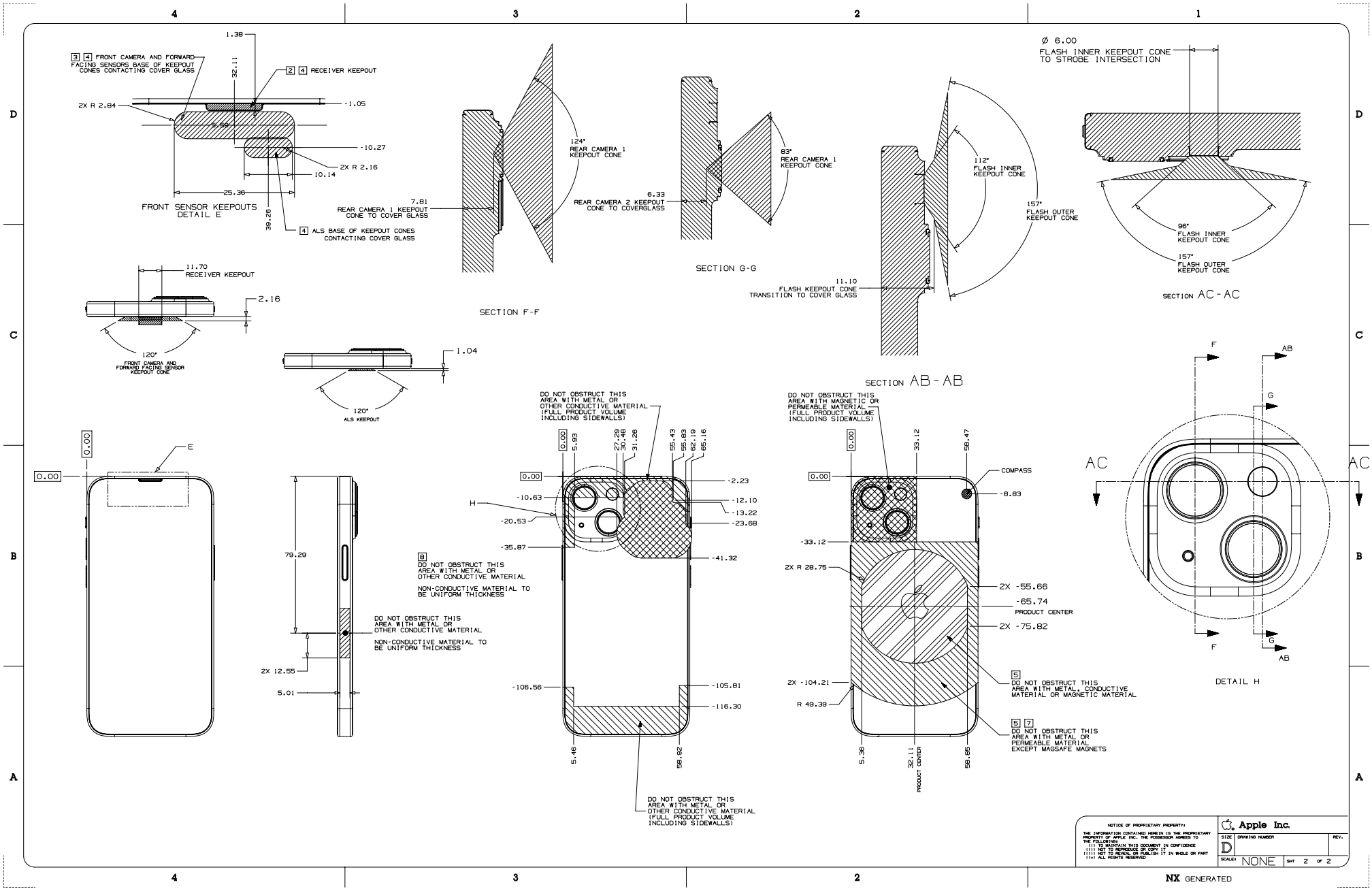

Copyright © 2023 Apple Inc. All Rights Reserved.

56.33 iPhone 12 Pro Max 1 of 2

[中文]

NOTES: (UNLESS OTHERWISE SPECIFIED)

1. NO METAL CONTACT WITH IPHONE.
2. DO NOT OBSTRUCT PORTS.
3. DO NOT OBSTRUCT THE IMAGING FEATURES: FRONT CAMERA, REAR CAMERAS, REAR FLASH.
4. DO NOT OBSTRUCT FORWARD FACING SENSORS.
5. RELATIVE MAGNETIC PERMEABILITY OF ANY METAL USED ON CASE: 1.05 MAX, PER ASTM A342/A342M-14.
6. DO NOT TOUCH GLASS.
7. NO MAGNETS ON REAR OF PRODUCT EXCEPT MAGSAFE MAGNETS.
8. CASE THICKNESS ON BACKSIDE OF PRODUCT: 2.1 mm MAX TO ENSURE FULL FUNCTIONALITY.

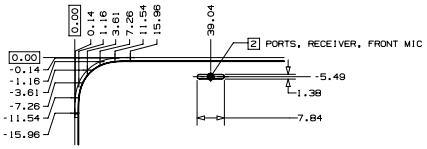

CORNER PROFILE (ALL FOUR CORNERS)
DETAIL A

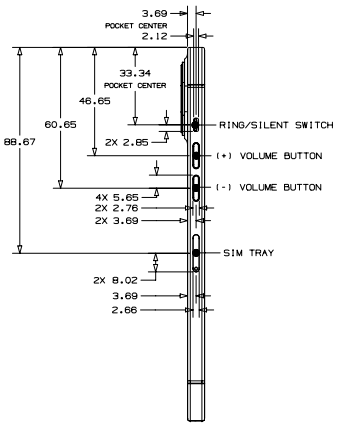

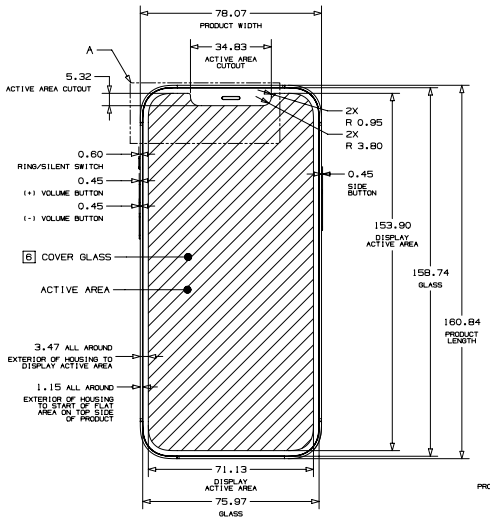

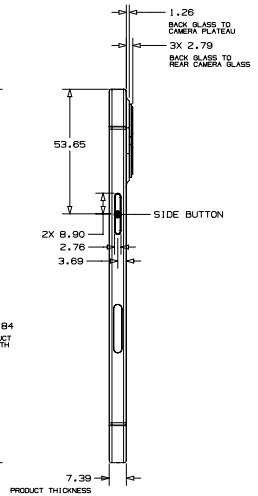

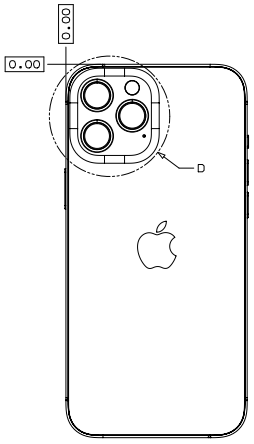

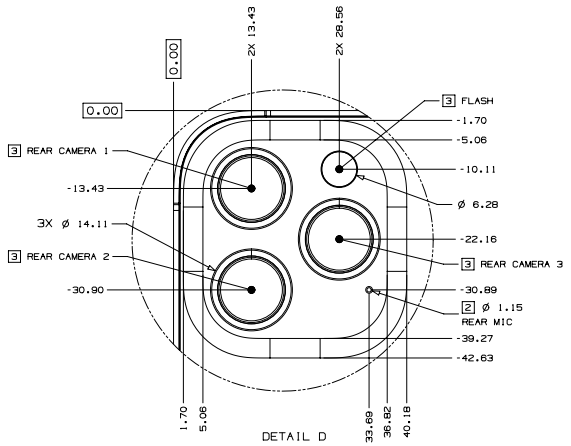

DETAIL D

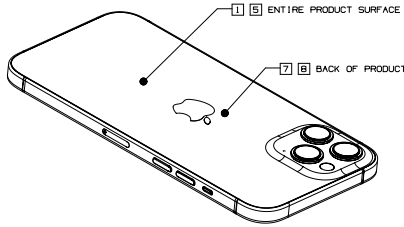

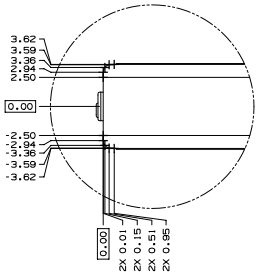

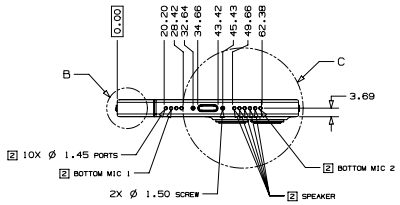

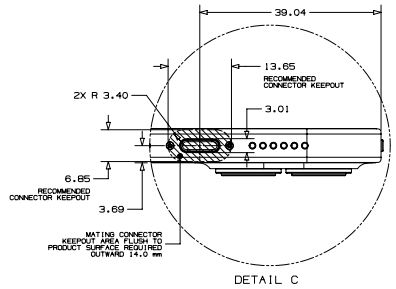

DETAIL C

METRIC		Apple Inc.
DRAFTER: APPLE INC.	DATE: 10/13/20	NOTICE OF PROPRIETARY PROPERTY: THE INFORMATION CONTAINED HEREIN IS THE PROPRIETARY PROPERTY OF APPLE INC. THE POSSESSOR AGREES TO THE FOLLOWING: (i) TO MAINTAIN THIS DOCUMENT IN CONFIDENCE (ii) TO USE IT FOR ONLY THE PURPOSE FOR WHICH IT IS NOT TO REVEAL OR PUBLISH IT IN WHOLE OR PART (iv) ALL RIGHTS RESERVED
DESIGNER: APPLE INC.	DATE: 10/13/20	TITLE: iPhone 12 Pro Max
		DRAWING NUMBER / REV.
THIRD ANGLE PROJECTION	SIZE: D	SCALE: NONE — SHT 1 OF 2

NX GENERATED

Copyright © 2023 Apple Inc. All Rights Reserved.

56.34 iPhone 12 Pro Max 2 of 2

[中文]

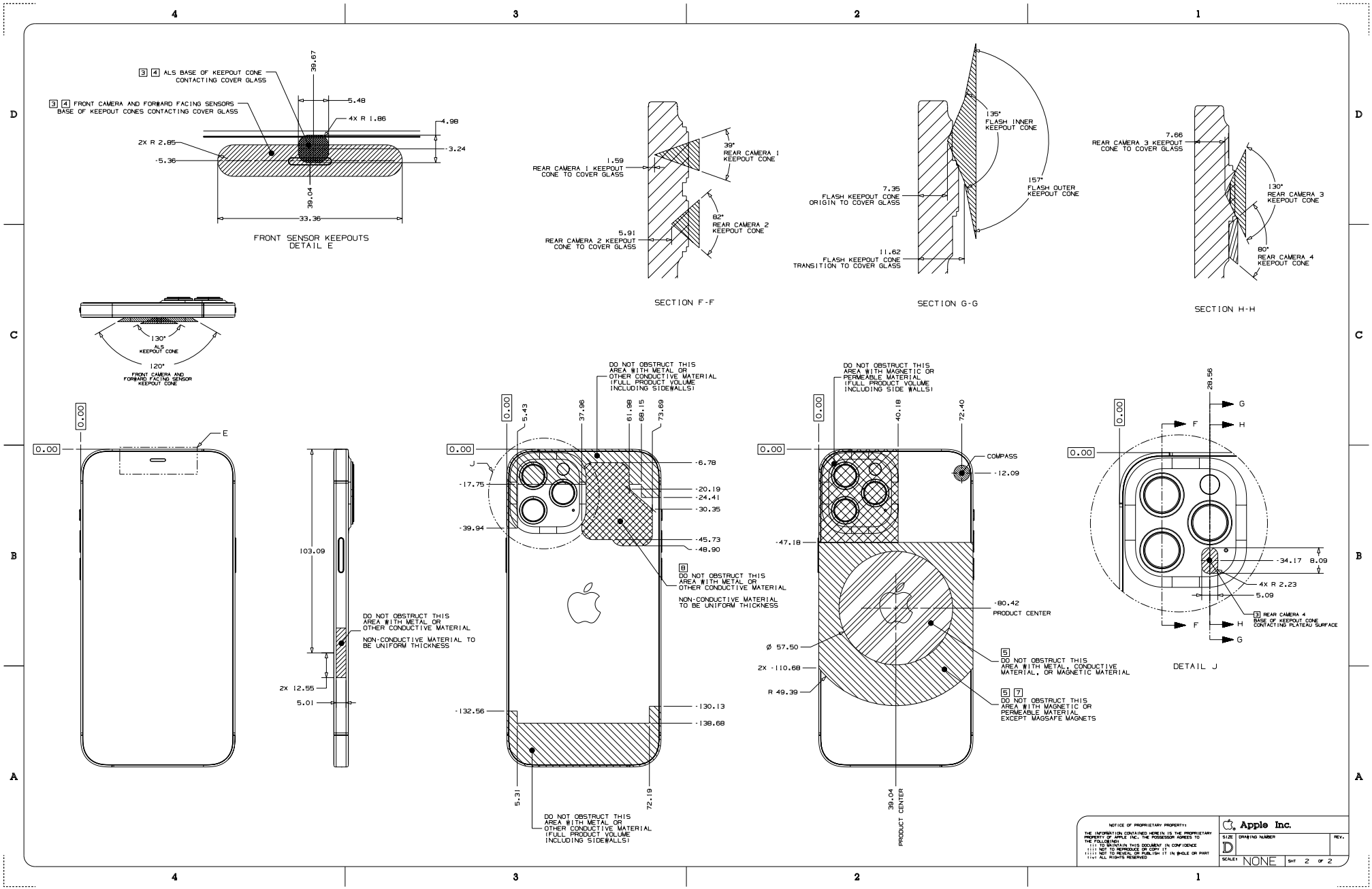

Copyright © 2023 Apple Inc. All Rights Reserved.

56.35 iPhone 12 Pro 1 of 2

[中文]

NOTES: (UNLESS OTHERWISE SPECIFIED)

1. NO METAL CONTACT WITH IPHONE.
2. DO NOT OBSTRUCT PORTS.
3. DO NOT OBSTRUCT THE IMAGING FEATURES: FRONT CAMERA, REAR CAMERAS, REAR FLASH.
4. DO NOT OBSTRUCT FORWARD FACING SENSORS.
5. RELATIVE MAGNETIC PERMEABILITY OF ANY METAL USED ON CASE: 1.05 MAX, PER ASTM A342/A342M-14.
6. DO NOT TOUCH GLASS.
7. NO MAGNETS ON REAR OF PRODUCT EXCEPT MAGSAFE MAGNETS.
8. CASE THICKNESS ON BACKSIDE OF PRODUCT: 2.1 mm MAX TO ENSURE FULL FUNCTIONALITY.

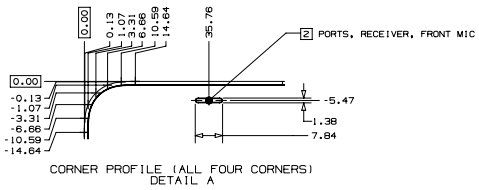

CORNER PROFILE (ALL FOUR CORNERS)
DETAIL A

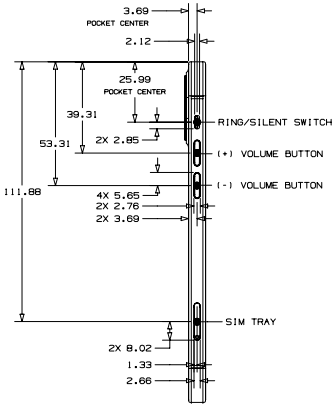

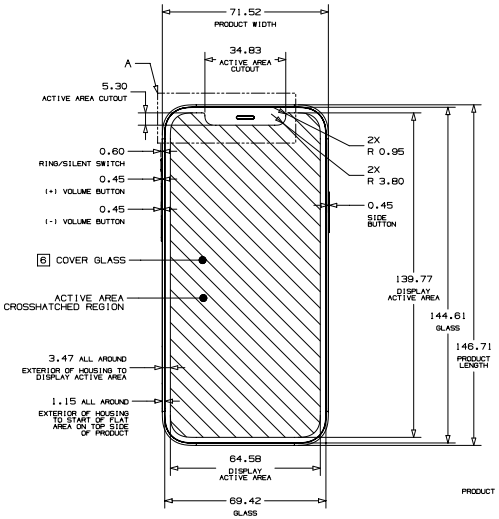

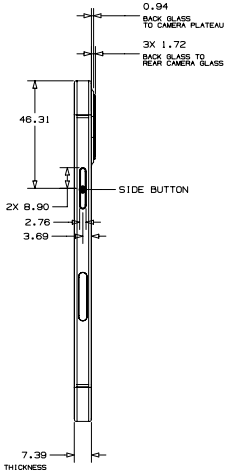

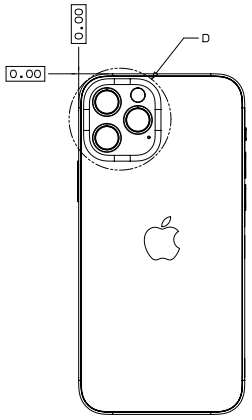

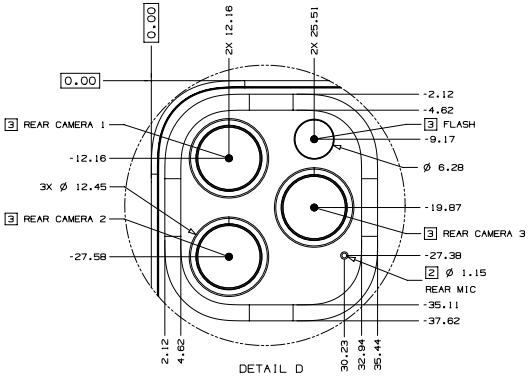

DETAIL D

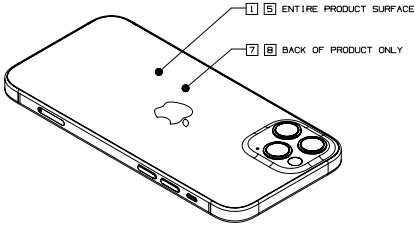

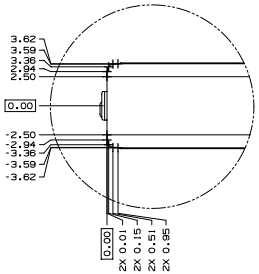

PROFILE (ALL SIDES)
DETAIL B

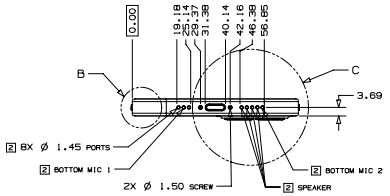

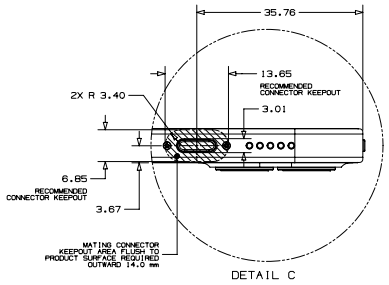

DETAIL C

METRIC	Apple Inc.
DRAFTER: APPLE INC. — DATE: 10/13/20	NOTICE OF PROPRIETARY PROPERTY: THE INFORMATION CONTAINED HEREIN IS THE PROPRIETARY PROPERTY OF APPLE INC. THE POSSESSOR AGREES TO THE FOLLOWING: (i) TO MAINTAIN THIS DOCUMENT IN CONFIDENCE (ii) NOT TO REPRODUCE OR COPY IT (iii) NOT TO REVEAL OR PUBLISH IT IN WHOLE OR PART (iv) ALL RIGHTS RESERVED
DESIGNER: APPLE INC. — DATE: 10/13/20	TITLE: iPhone 12 Pro
	DRAWING NUMBER — REV.
THIRD ANGLE PROJECTION — SIZE: D	SCALE: NONE — SHT 1 OF 2

NX GENERATED

Copyright © 2023 Apple Inc. All Rights Reserved.

56.36 iPhone 12 Pro 2 of 2

[中文]

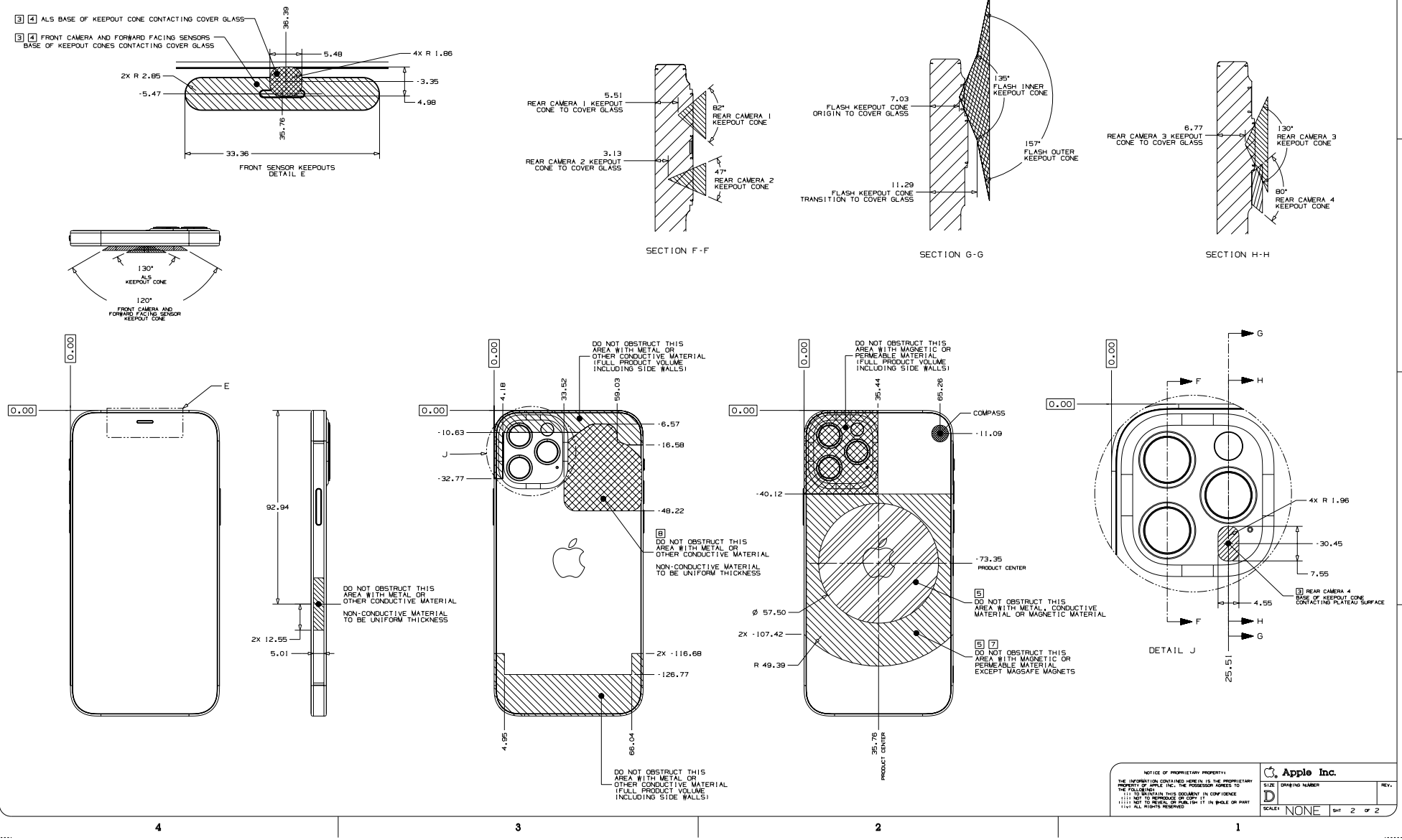

56.37 iPhone 12 1 of 2

[中文]

NOTES: (UNLESS OTHERWISE SPECIFIED)

1. NO METAL CONTACT WITH IPHONE.
2. DO NOT OBSTRUCT PORTS.
3. DO NOT OBSTRUCT THE IMAGING FEATURES: FRONT CAMERA, REAR CAMERAS, REAR FLASH.
4. DO NOT OBSTRUCT FORWARD FACING SENSORS.
5. RELATIVE MAGNETIC PERMEABILITY OF ANY METAL USED ON CASE: 1.05 MAX, PER ASTM A342/A342M-14.
6. DO NOT TOUCH GLASS.
7. NO MAGNETS ON REAR OF PRODUCT EXCEPT MAGSAFE MAGNETS.
8. CASE THICKNESS ON BACKSIDE OF PRODUCT: 2.1 mm MAX TO ENSURE FULL FUNCTIONALITY.

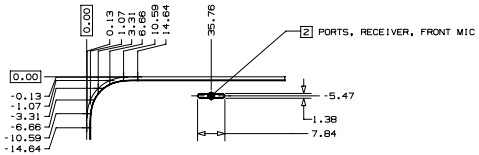

CORNER PROFILE (ALL FOUR CORNERS)
DETAIL A

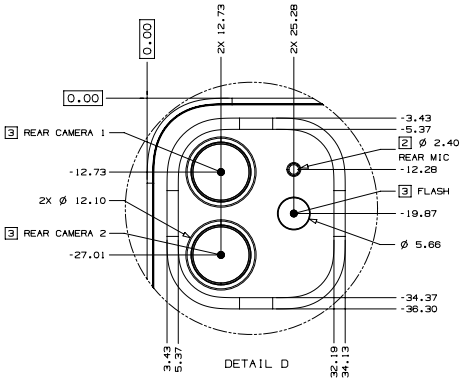

DETAIL D

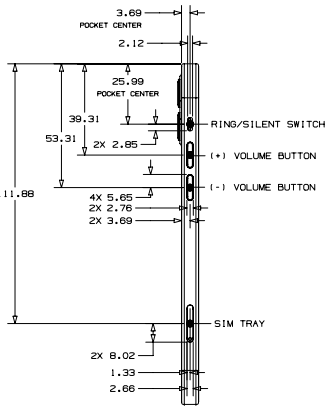

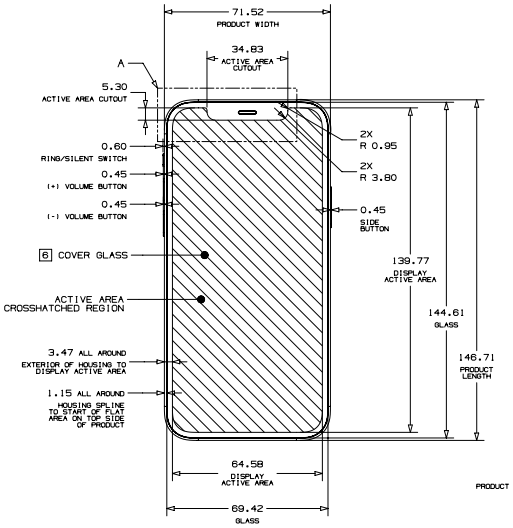

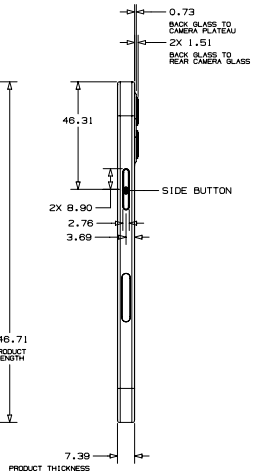

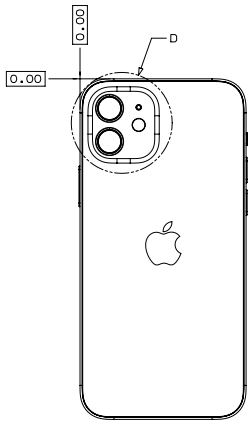

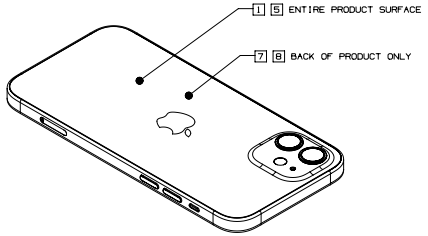

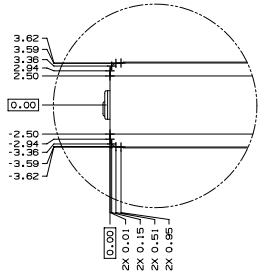

PROFILE (ALL SIDES)
DETAIL B

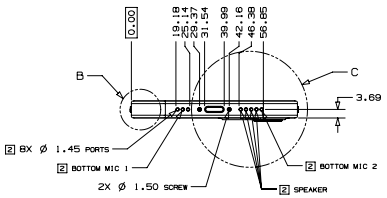

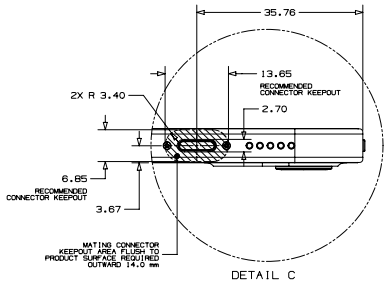

DETAIL C

METRIC		Apple Inc.	
DRAFTER: APPLE INC.	DATE: 10/13/20	NOTICE OF PROPRIETARY PROPERTY: THE INFORMATION CONTAINED HEREIN IS THE PROPRIETARY PROPERTY OF APPLE INC. THE POSSESSOR AGREES TO THE FOLLOWING: (i) TO MAINTAIN THIS DOCUMENT IN CONFIDENCE (ii) NOT TO COPY OR REPRODUCE IT (iii) NOT TO REVEAL OR PUBLISH IT IN WHOLE OR PART (iv) ALL RIGHTS RESERVED	
DESIGNER: APPLE INC.	DATE: 10/13/20	TITLE: iPhone 12	
		DRAWING NUMBER	REV.
THIRD ANGLE PROJECTION	SIZE: D	SCALE: NONE	SHT 1 OF 2

NX GENERATED

56.38 iPhone 12 2 of 2

[中文]

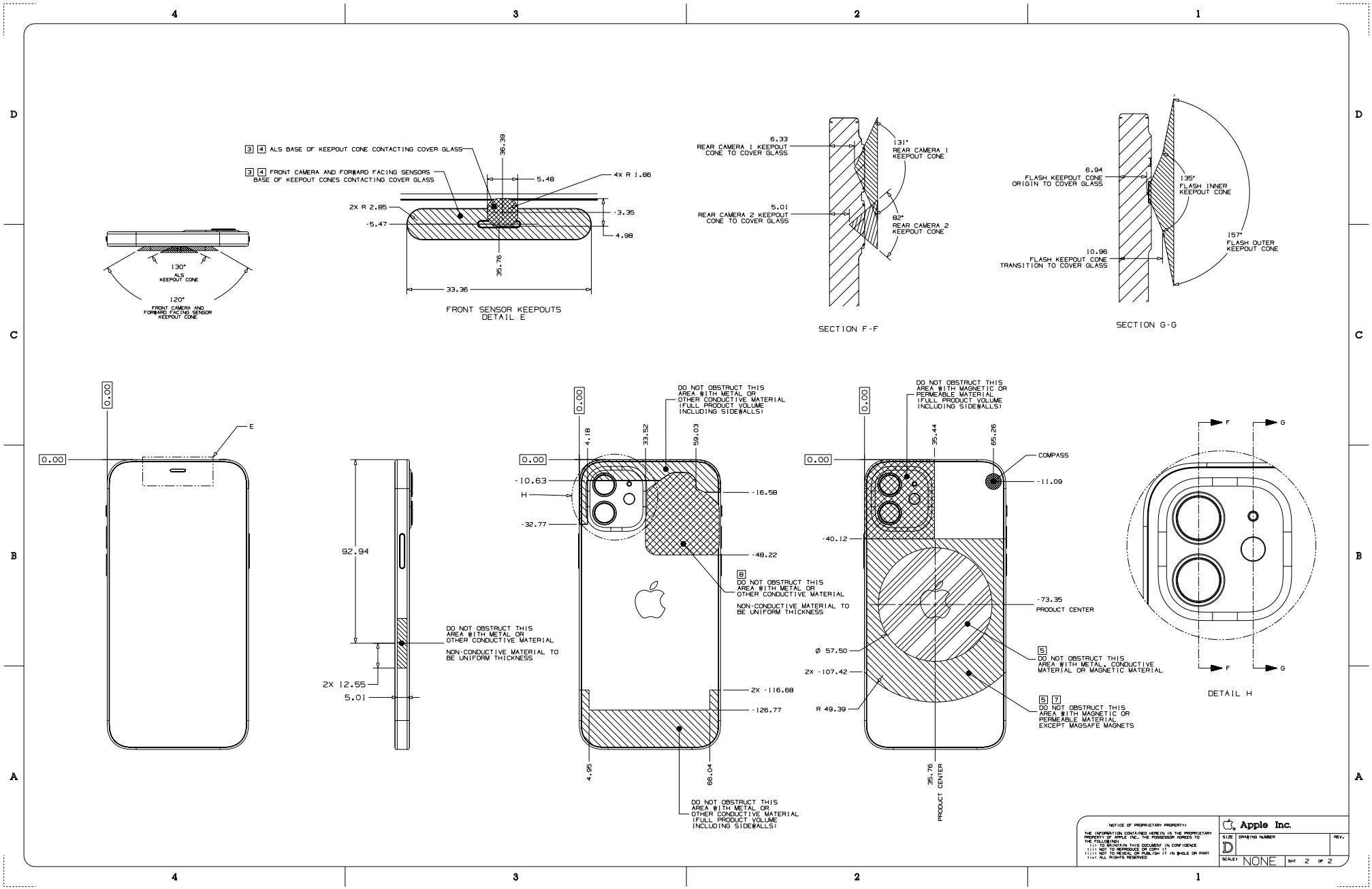

56.39 iPhone 12 mini 1 of 2

[中文]

NOTES: (UNLESS OTHERWISE SPECIFIED)

1. NO METAL CONTACT WITH IPHONE.
2. DO NOT OBSTRUCT PORTS.
3. DO NOT OBSTRUCT THE IMAGING FEATURES: FRONT CAMERA, REAR CAMERAS, REAR FLASH.
4. DO NOT OBSTRUCT FORWARD FACING SENSORS.
5. RELATIVE MAGNETIC PERMEABILITY OF ANY METAL USED ON CASE: 1.05 MAX, PER ASTM A342/A342M-14.
6. DO NOT TOUCH GLASS.
7. NO MAGNETS ON REAR OF PRODUCT EXCEPT MAGSAFE MAGNETS.
8. CASE THICKNESS ON BACKSIDE OF PRODUCT: 2.1 mm MAX TO ENSURE FULL FUNCTIONALITY.

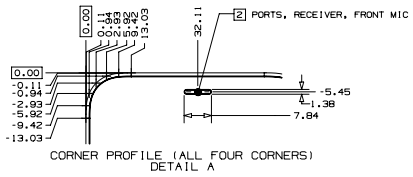

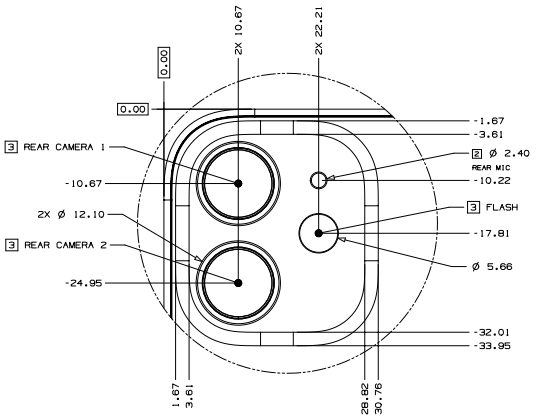

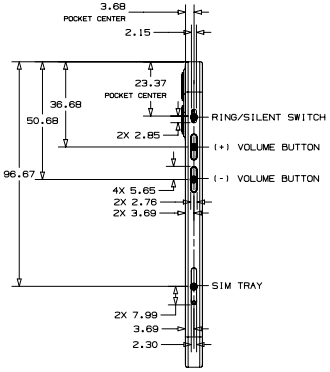

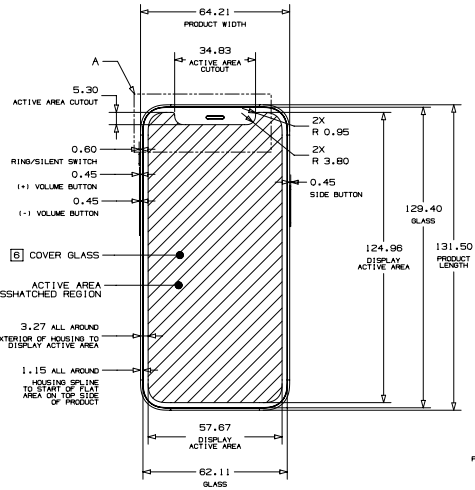

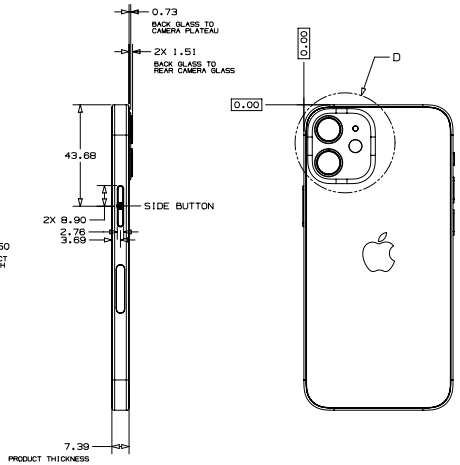

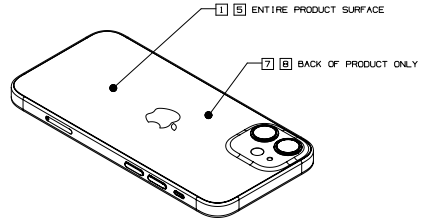

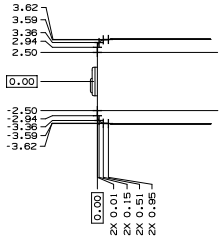

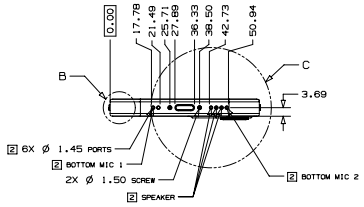

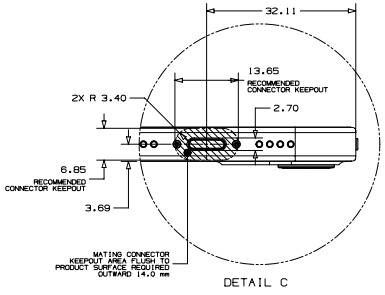

METRIC	Apple Inc.
DRAFTER: APPLE INC. — DATE: 10/13/20	NOTICE OF PROPRIETARY PROPERTY: THE INFORMATION CONTAINED HEREIN IS THE PROPRIETARY PROPERTY OF APPLE INC. THE POSSESSOR AGREES TO THE FOLLOWING: (i) TO MAINTAIN THIS DOCUMENT IN CONFIDENCE (ii) NOT TO REPRODUCE OR COPY IT (iii) NOT TO REVEAL OR PUBLISH IT IN WHOLE OR PART (iv) ALL RIGHTS RESERVED
DESIGNER: APPLE INC. — DATE: 10/13/20	TITLE: iPhone 12 mini
	DRAWING NUMBER — REV.
THIRD ANGLE PROJECTION — SIZE: D	SCALE: NONE — SHT 1 OF 2

NX GENERATED

56.40 iPhone 12 mini 2 of 2

[中文]

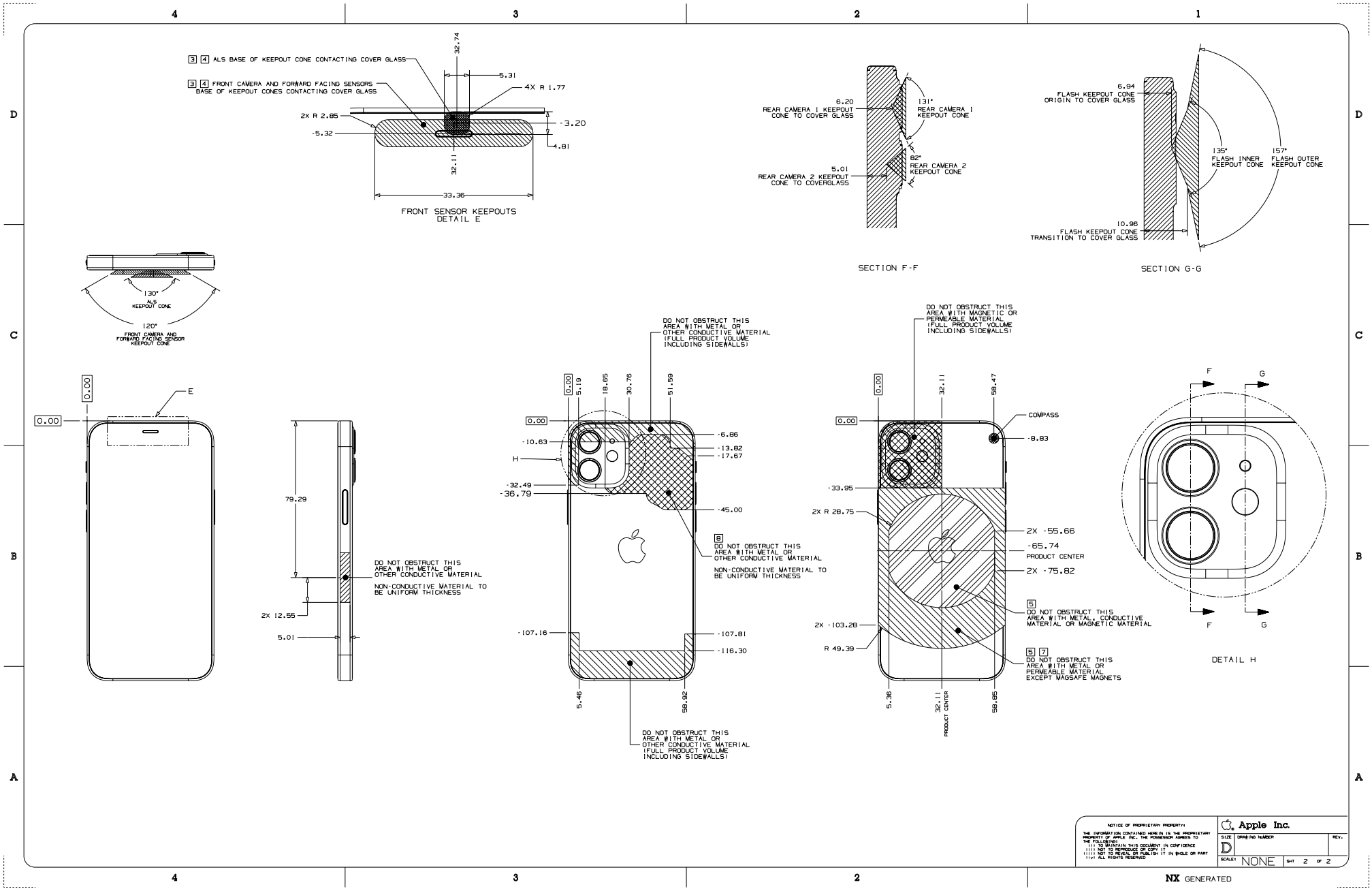

Copyright © 2023 Apple Inc. All Rights Reserved.

56.41 iPhone SE (3rd generation) and iPhone SE (2nd generation)

[中文]

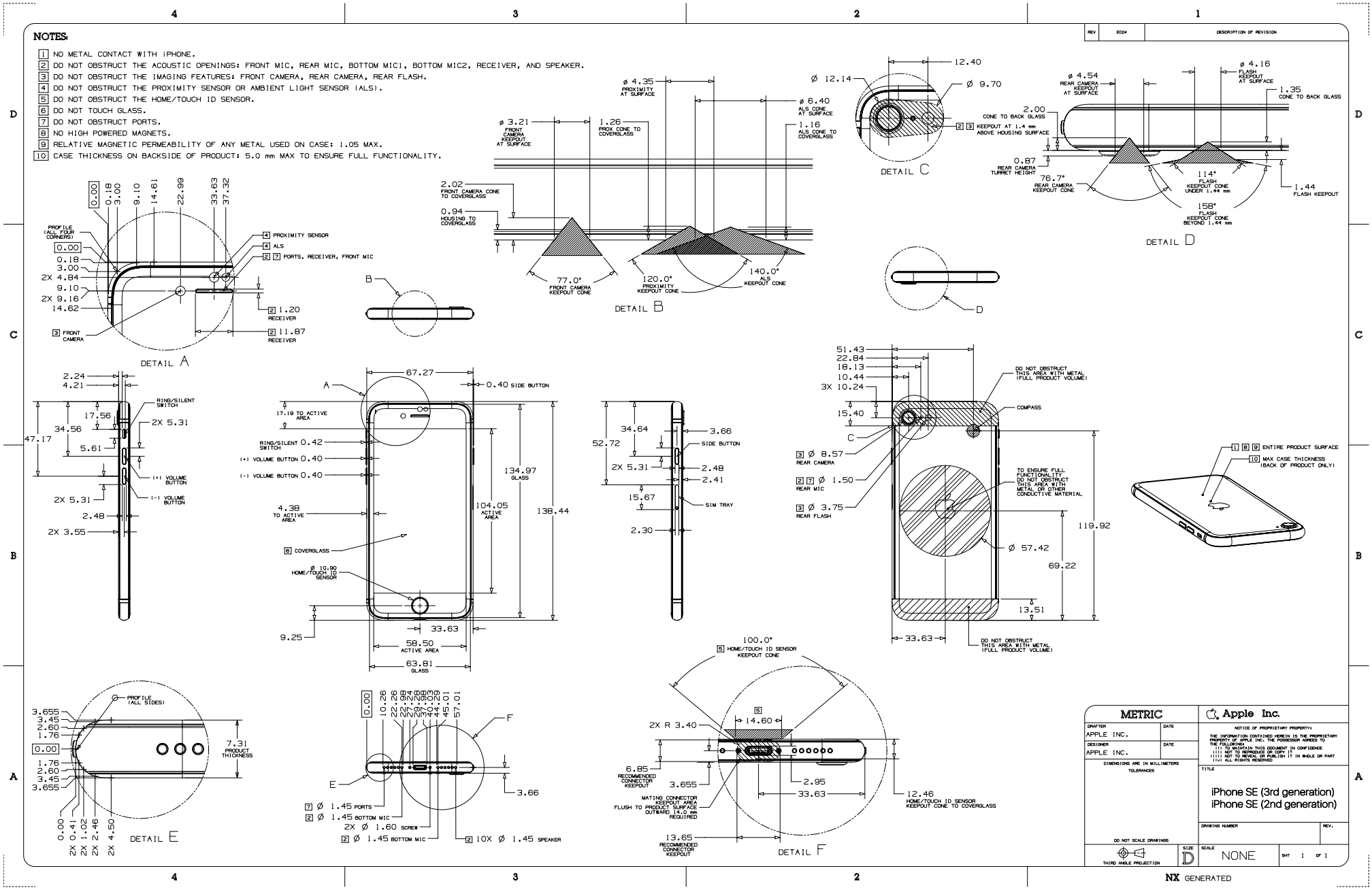

Copyright © 2023 Apple Inc. All Rights Reserved.

56.42 iPhone 11 Pro Max

[中文]

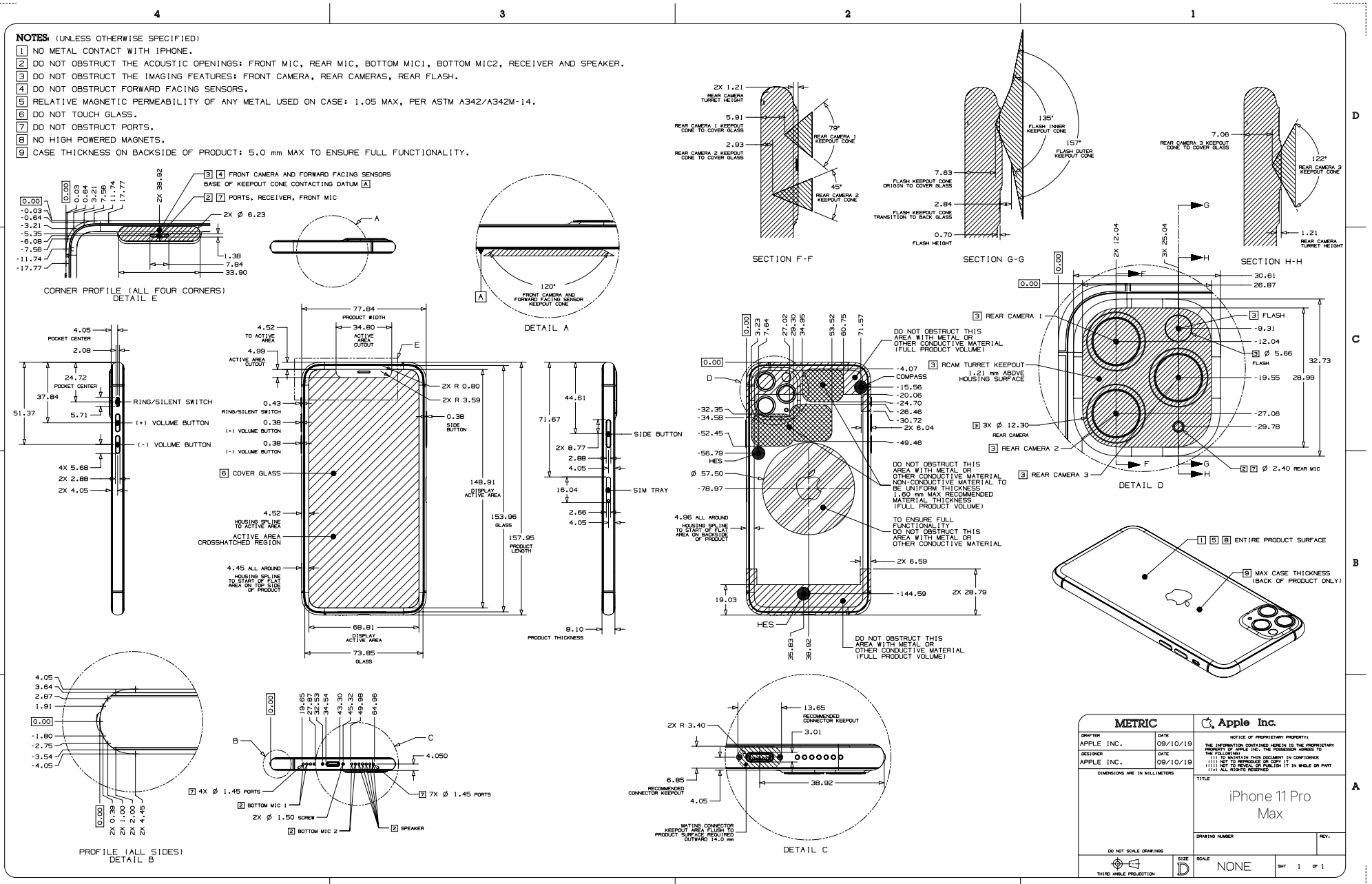

Copyright © 2023 Apple Inc. All Rights Reserved.

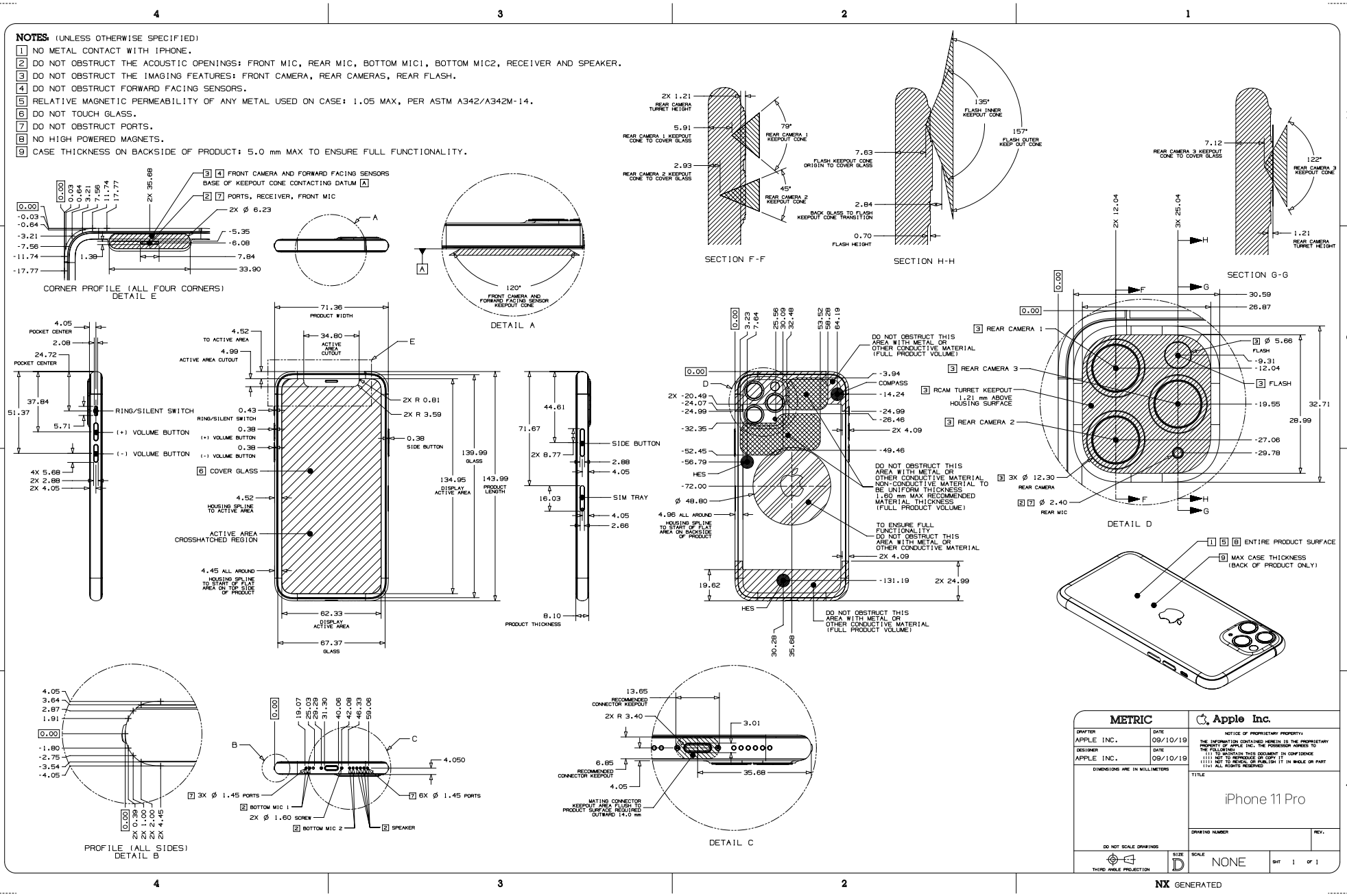
NOTES: (UNLESS OTHERWISE SPECIFIED)
1 NO METAL CONTACT WITH IPHONE.
2 DO NOT OBSTRUCT THE ACOUSTIC OPENINGS: FRONT MIC, REAR MIC, BOTTOM MIC1, BOTTOM MIC2, RECEIVER AND SPEAKER.
3 DO NOT OBSTRUCT THE IMAGING FEATURES: FRONT CAMERA, REAR CAMERAS, REAR FLASH.
4 DO NOT OBSTRUCT FORWARD FACING SENSORS.
5 RELATIVE MAGNETIC PERMEABILITY OF ANY METAL USED ON CASE: 1.05 MAX, PER ASTM A342/A342M-14.
6 DO NOT TOUCH GLASS.
7 DO NOT OBSTRUCT PORTS.
8 NO HIGH POWERED MAGNETS.
9 CASE THICKNESS ON BACKSIDE OF PRODUCT: 5.0 mm MAX TO ENSURE FULL FUNCTIONALITY.
CORNER PROFILE (ALL FOUR CORNERS)
DETAIL E
DETAIL A
SECTION F-F
SECTION H-H
SECTION G-G
DETAIL D
PROFILE (ALL SIDES)
DETAIL B
DETAIL C
METRIC
Apple Inc.
iPhone 11 Pro
NX GENERATED

56.44 iPhone 11

[中文]

NOTES:

1. NO METAL CONTACT WITH IPHONE.
2. DO NOT OBSTRUCT THE ACOUSTIC OPENINGS: FRONT MIC, REAR MIC, BOTTOM MIC1, BOTTOM MIC2, RECEIVER AND SPEAKER.
3. DO NOT OBSTRUCT THE IMAGING FEATURES: FRONT CAMERA, REAR CAMERA, REAR FLASH.
4. DO NOT OBSTRUCT FORWARD FACING SENSORS.
5. RELATIVE MAGNETIC PERMEABILITY OF ANY METAL USED ON CASE: 1.05 MAX, PER ASTM A342/A342M-14.
6. DO NOT TOUCH GLASS.
7. DO NOT OBSTRUCT PORTS.
8. NO HIGH POWERED MAGNETS.
9. CASE THICKNESS ON BACKSIDE OF PRODUCT: 5.0 mm MAX TO ENSURE FULL FUNCTIONALITY.

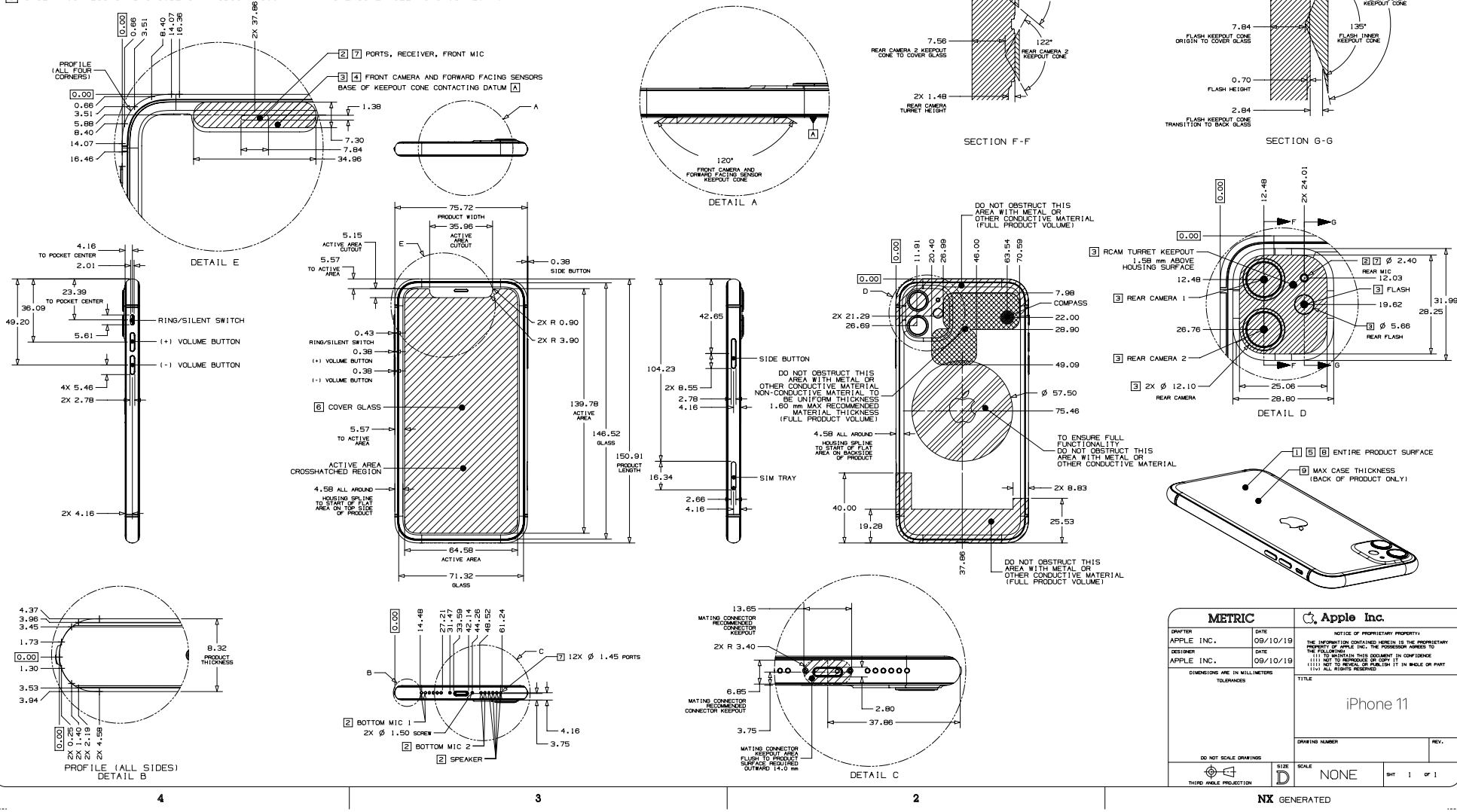

Copyright © 2023 Apple Inc. All Rights Reserved.

56.45 iPhone XS Max

[中文]

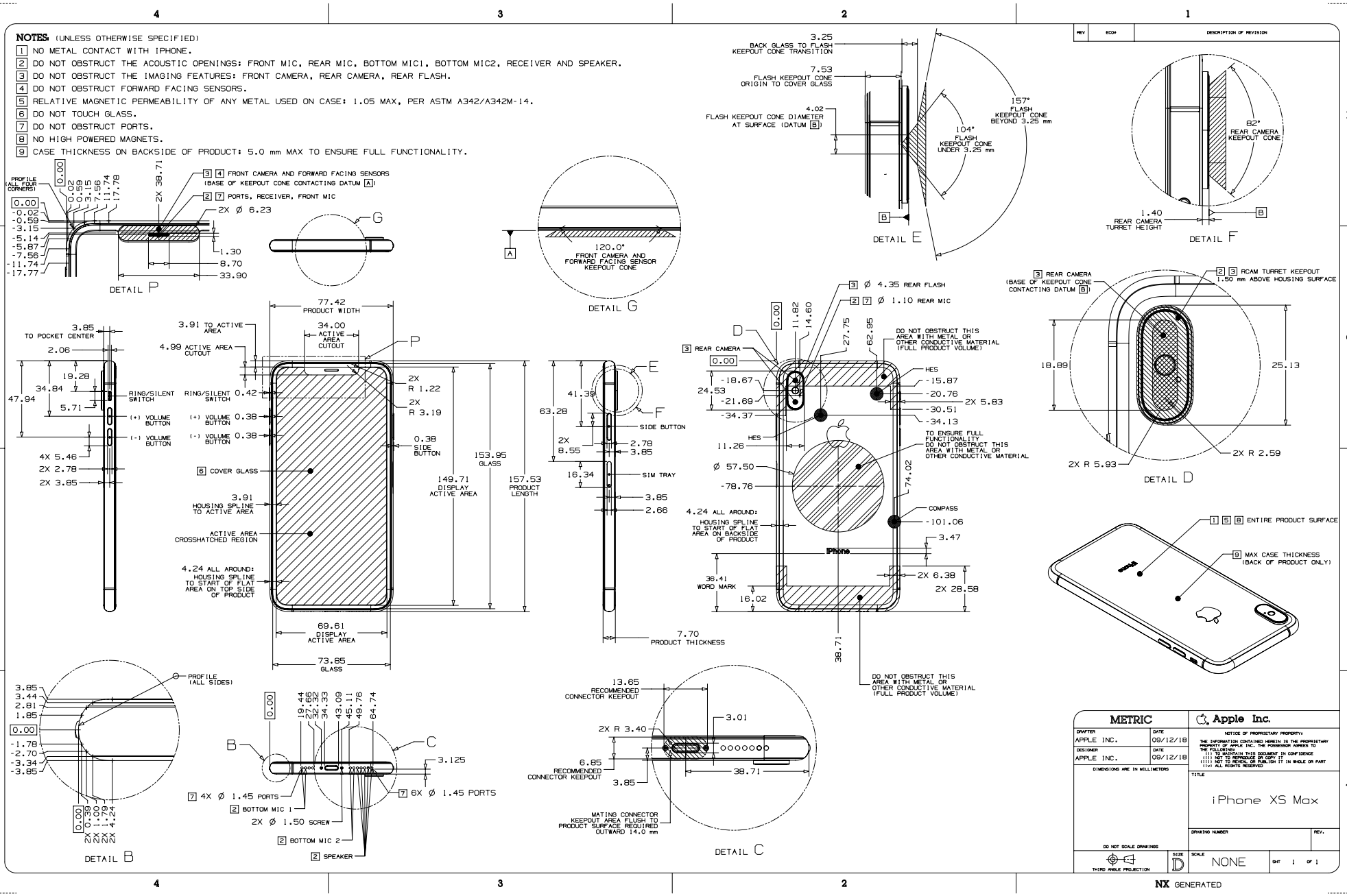

Copyright © 2023 Apple Inc. All Rights Reserved.

56.46 iPhone XS

[中文]

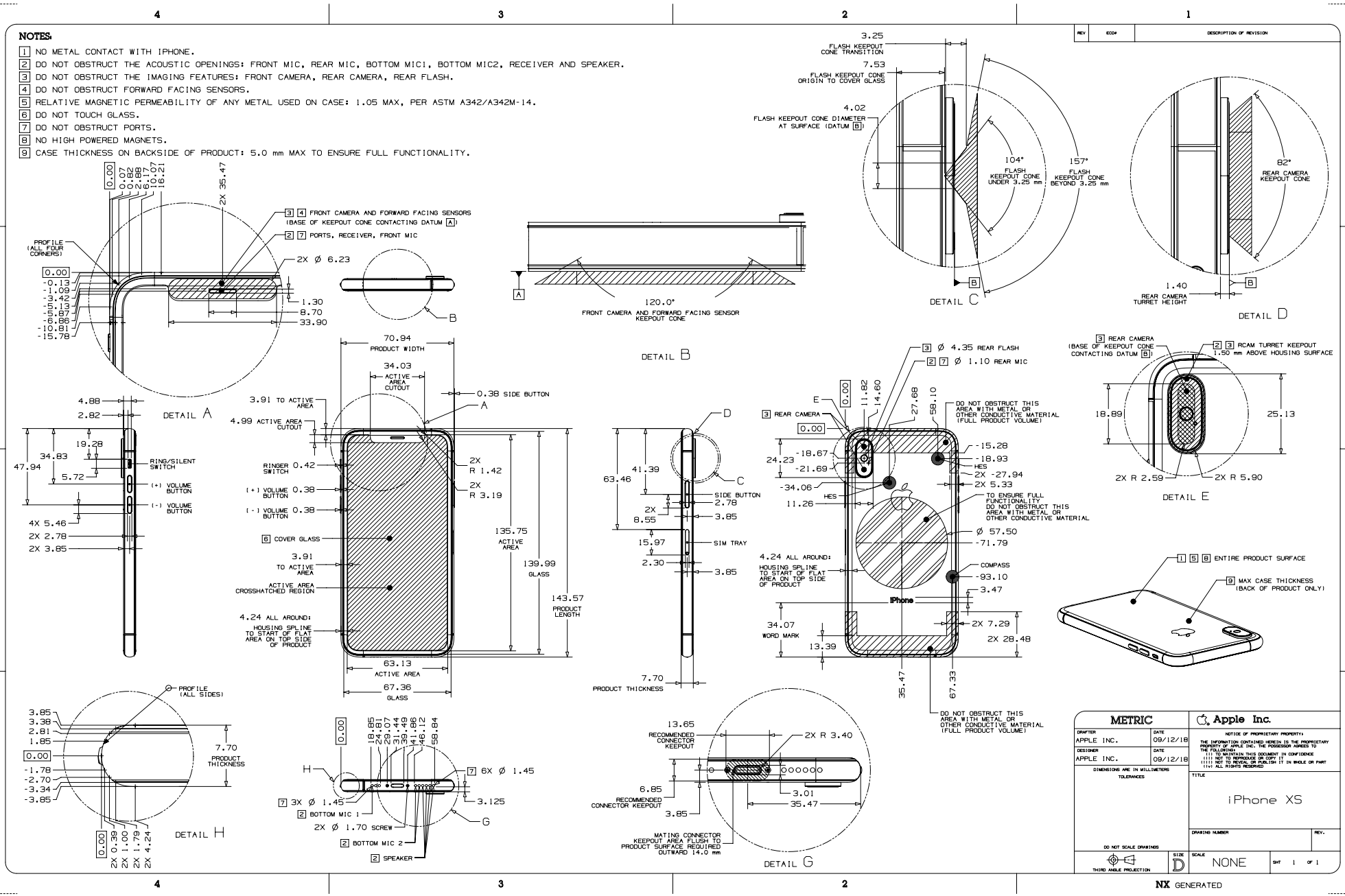

Copyright © 2023 Apple Inc. All Rights Reserved.

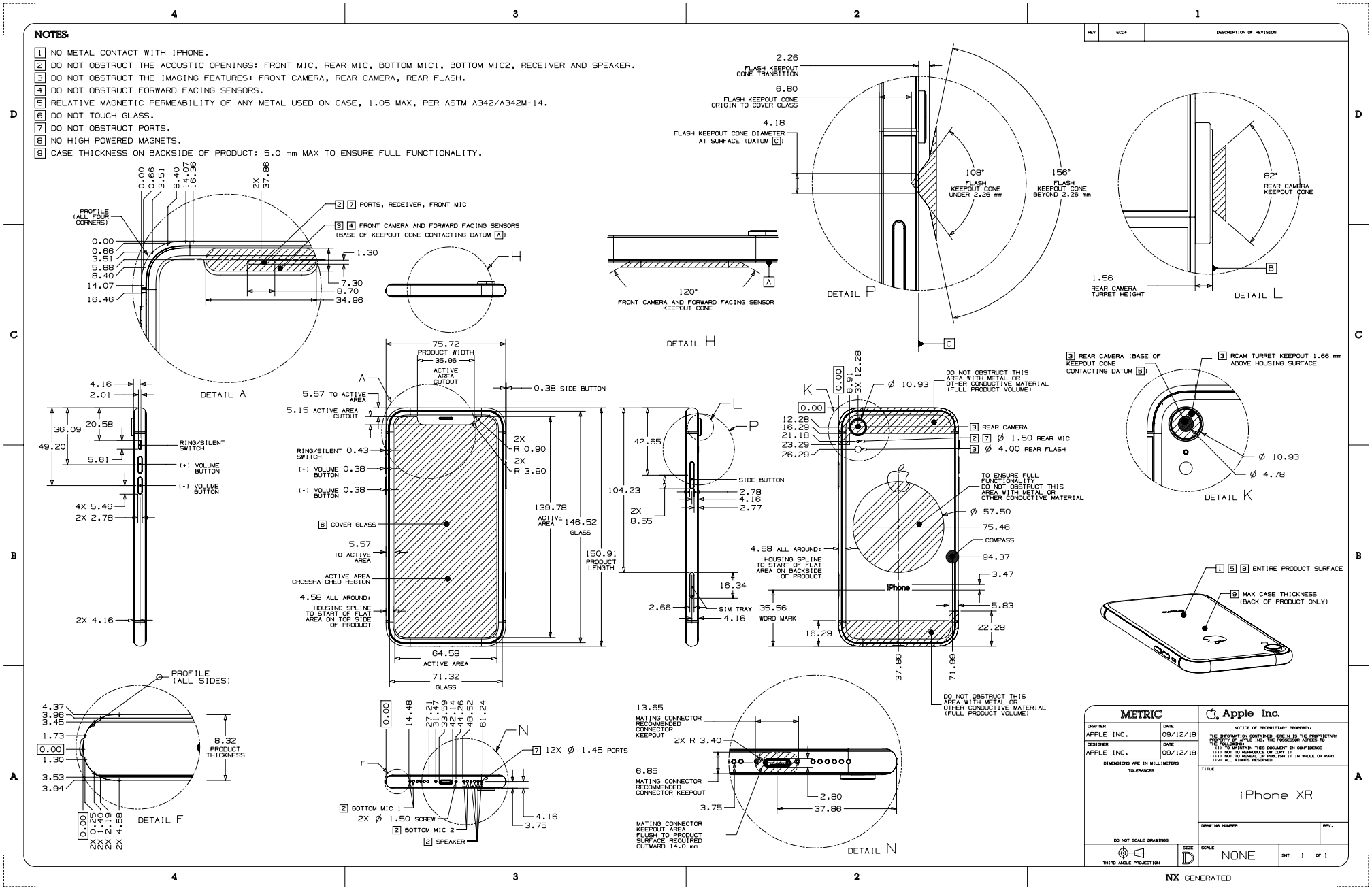
NOTES:
1 NO METAL CONTACT WITH IPHONE.
2 DO NOT OBSTRUCT THE ACOUSTIC OPENINGS: FRONT MIC, REAR MIC, BOTTOM MIC1, BOTTOM MIC2, RECEIVER AND SPEAKER.
3 DO NOT OBSTRUCT THE IMAGING FEATURES: FRONT CAMERA, REAR CAMERA, REAR FLASH.
4 DO NOT OBSTRUCT FORWARD FACING SENSORS.
5 RELATIVE MAGNETIC PERMEABILITY OF ANY METAL USED ON CASE, 1.05 MAX, PER ASTM A342/A342M-14.
6 DO NOT TOUCH GLASS.
7 DO NOT OBSTRUCT PORTS.
8 NO HIGH POWERED MAGNETS.
9 CASE THICKNESS ON BACKSIDE OF PRODUCT: 5.0 mm MAX TO ENSURE FULL FUNCTIONALITY.
DETAIL A
DETAIL H
DETAIL P
DETAIL L
DETAIL K
DETAIL F
DETAIL N
RING/SILENT SWITCH
(+) VOLUME BUTTON
(-) VOLUME BUTTON
SIDE BUTTON
COVER GLASS
ACTIVE AREA
GLASS
PRODUCT WIDTH
PRODUCT LENGTH
SIM TRAY
WORD MARK
REAR CAMERA
REAR MIC
REAR FLASH
COMPASS
iPhone
FRONT CAMERA AND FORWARD FACING SENSOR KEEPOUT CONE
FLASH KEEPOUT CONE TRANSITION
FLASH KEEPOUT CONE ORIGIN TO COVER GLASS
FLASH KEEPOUT CONE DIAMETER AT SURFACE (DATUM C)
FLASH KEEPOUT CONE UNDER 2.26 mm
FLASH KEEPOUT CONE BEYOND 2.26 mm
REAR CAMERA KEEPOUT CONE
REAR CAMERA TURRET HEIGHT
REAR CAMERA TURRET KEEPOUT 1.66 mm ABOVE HOUSING SURFACE
ENTIRE PRODUCT SURFACE
MAX CASE THICKNESS (BACK OF PRODUCT ONLY)
DO NOT OBSTRUCT THIS AREA WITH METAL OR OTHER CONDUCTIVE MATERIAL (FULL PRODUCT VOLUME)
TO ENSURE FULL FUNCTIONALITY DO NOT OBSTRUCT THIS AREA WITH METAL OR OTHER CONDUCTIVE MATERIAL
HOUSING SPLINE TO START OF FLAT AREA ON BACKSIDE OF PRODUCT
HOUSING SPLINE TO START OF FLAT AREA ON TOP SIDE OF PRODUCT
MATING CONNECTOR RECOMMENDED CONNECTOR KEEPOUT
MATING CONNECTOR KEEPOUT AREA FLUSH TO PRODUCT SURFACE REQUIRED OUTWARD 14.0 mm
BOTTOM MIC 1
BOTTOM MIC 2
SPEAKER
PORTS, RECEIVER, FRONT MIC
FRONT CAMERA AND FORWARD FACING SENSORS (BASE OF KEEPOUT CONE CONTACTING DATUM A)
REAR CAMERA (BASE OF KEEPOUT CONE CONTACTING DATUM B)
METRIC
Apple Inc.
DRAFTER APPLE INC. 09/12/18
DESIGNER APPLE INC. 09/12/18
DIMENSIONS ARE IN MILLIMETERS
TOLERANCES
DO NOT SCALE DRAWINGS
THIRD ANGLE PROJECTION
NOTICE OF PROPRIETARY PROPERTY
THE INFORMATION CONTAINED HEREIN IS THE PROPRIETARY PROPERTY OF APPLE INC. THE POSSESSOR AGREES TO THE FOLLOWING:
(i) TO MAINTAIN THIS DOCUMENT IN CONFIDENCE
(ii) NOT TO REPRODUCE OR COPY IT
(iii) NOT TO REVEAL OR PUBLISH IT IN WHOLE OR PART
(iv) ALL RIGHTS RESERVED
TITLE
iPhone XR
DRAWING NUMBER
REV.
SIZE D
SCALE NONE
SHT 1 OF 1
NX GENERATED

56.48 iPhone X

[中文]

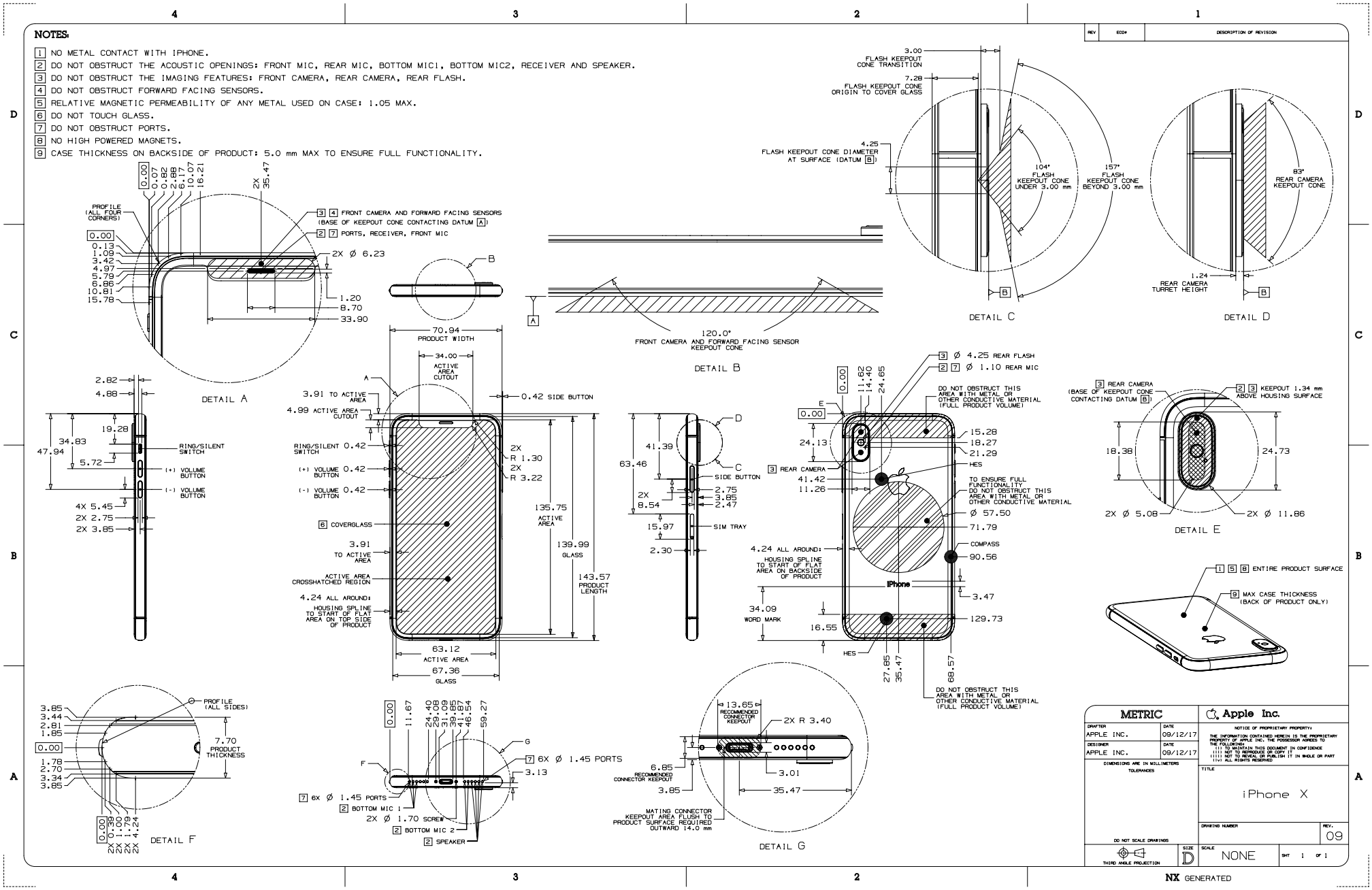

Copyright © 2023 Apple Inc. All Rights Reserved.

56.49 iPhone 8 Plus

[中文]

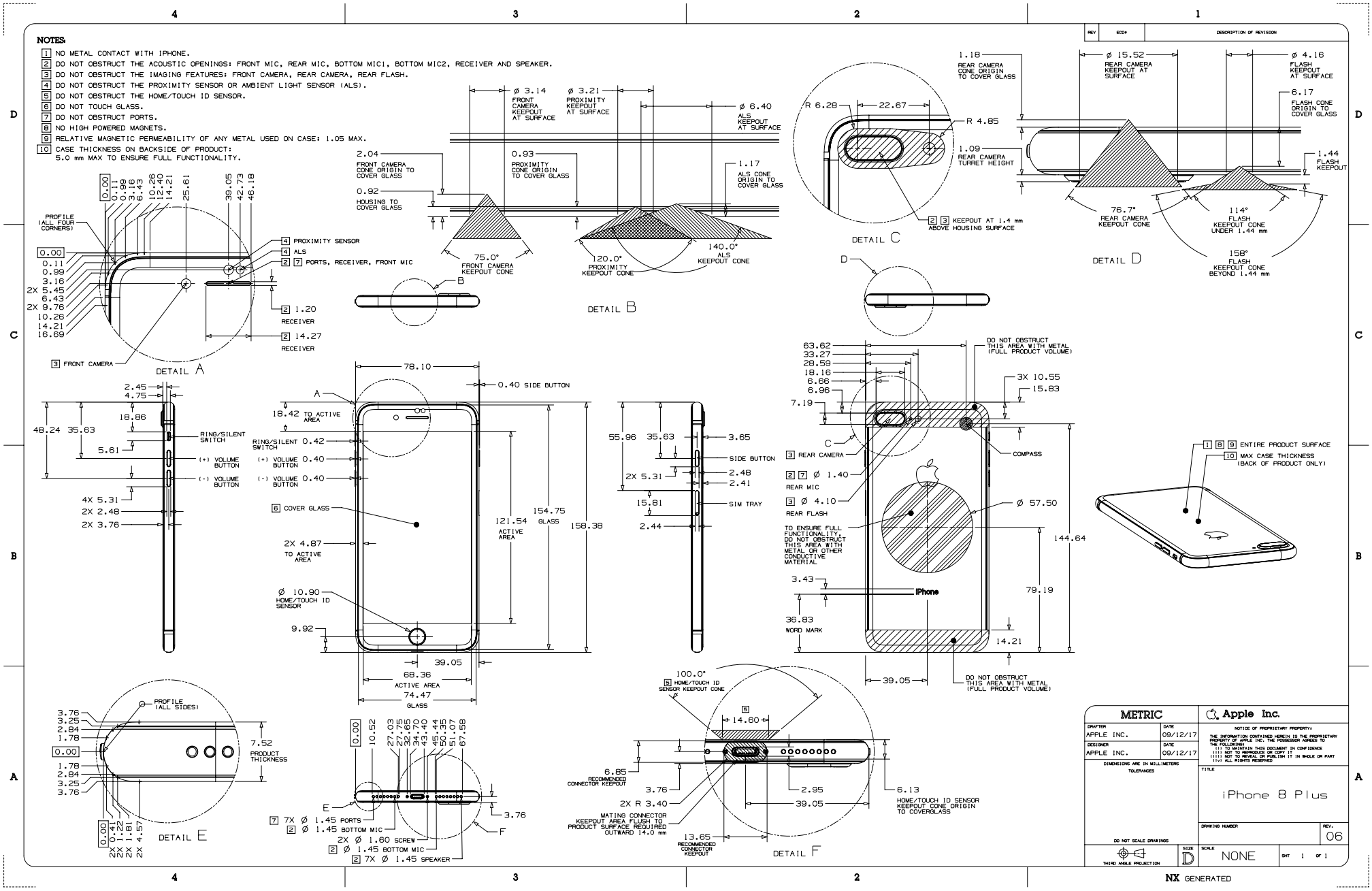

Copyright © 2023 Apple Inc. All Rights Reserved.

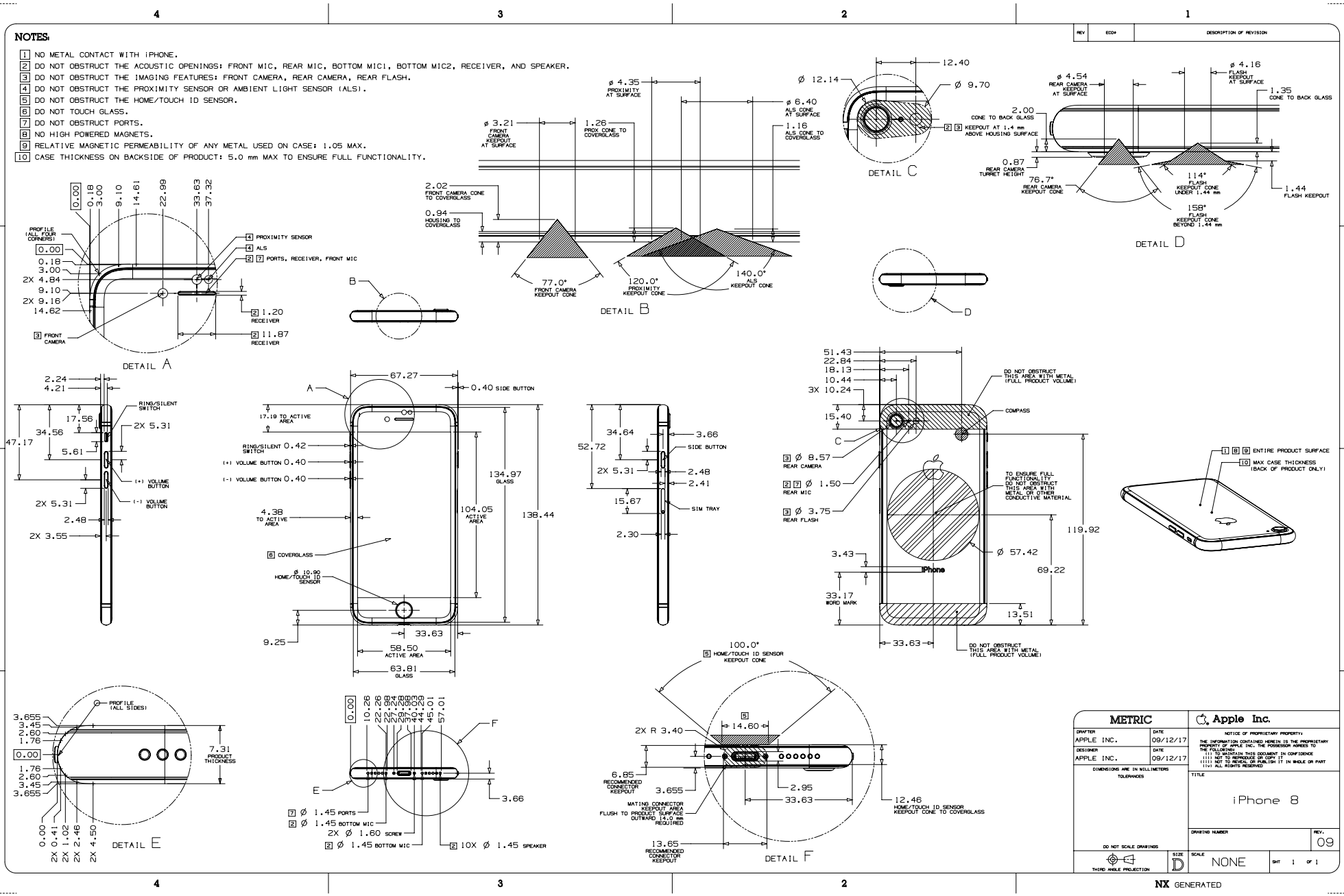
NOTES:
1 NO METAL CONTACT WITH iPHONE.
2 DO NOT OBSTRUCT THE ACOUSTIC OPENINGS: FRONT MIC, REAR MIC, BOTTOM MIC1, BOTTOM MIC2, RECEIVER, AND SPEAKER.
3 DO NOT OBSTRUCT THE IMAGING FEATURES: FRONT CAMERA, REAR CAMERA, REAR FLASH.
4 DO NOT OBSTRUCT THE PROXIMITY SENSOR OR AMBIENT LIGHT SENSOR (ALS).
5 DO NOT OBSTRUCT THE HOME/TOUCH ID SENSOR.
6 DO NOT TOUCH GLASS.
7 DO NOT OBSTRUCT PORTS.
8 NO HIGH POWERED MAGNETS.
9 RELATIVE MAGNETIC PERMEABILITY OF ANY METAL USED ON CASE: 1.05 MAX.
10 CASE THICKNESS ON BACKSIDE OF PRODUCT: 5.0 mm MAX TO ENSURE FULL FUNCTIONALITY.
DETAIL A
DETAIL B
DETAIL C
DETAIL D
DETAIL E
DETAIL F
METRIC
Apple Inc.
iPhone 8
NX GENERATED

56.51 iPhone 7 Plus

[中文]

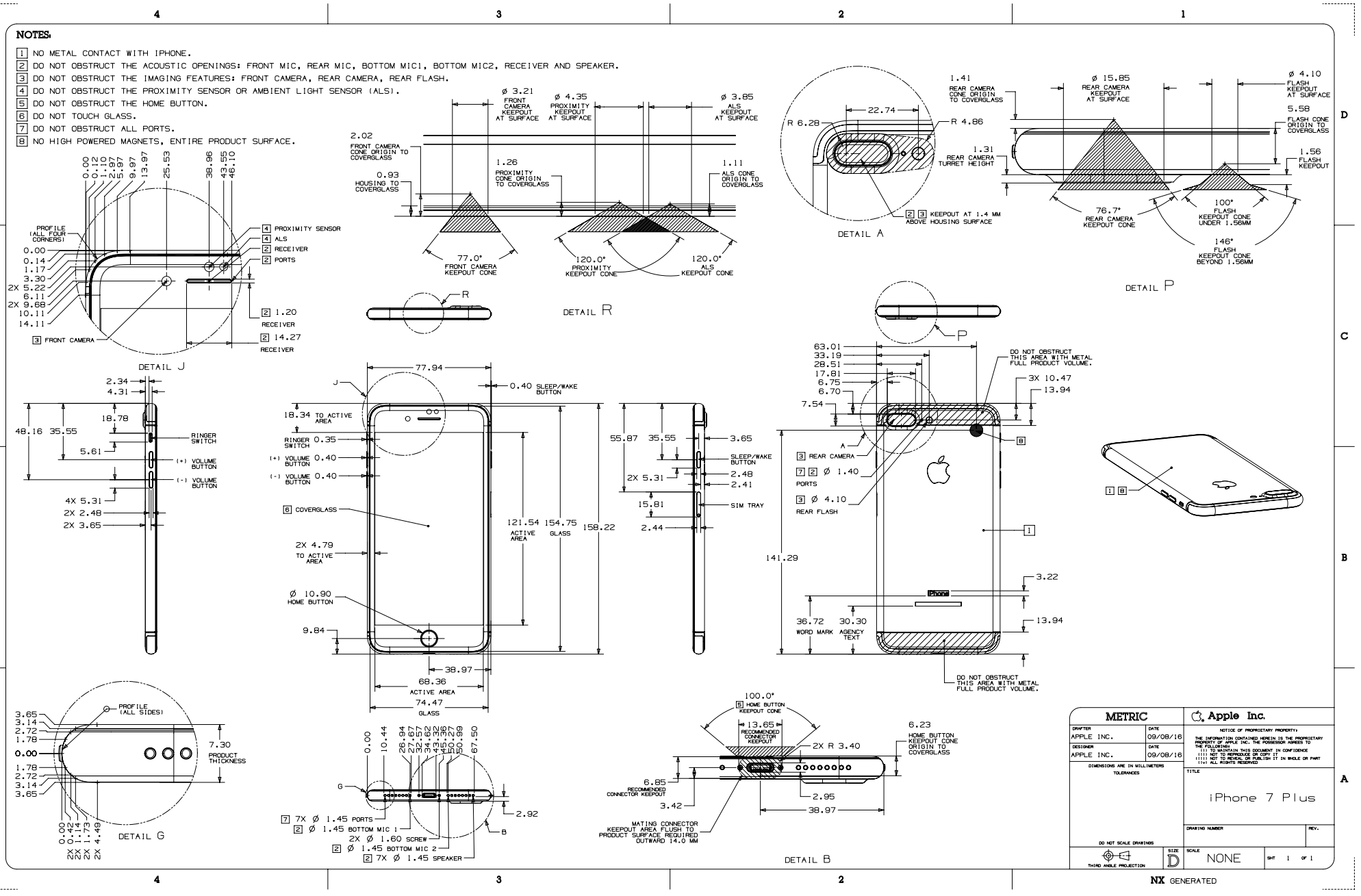

Copyright © 2023 Apple Inc. All Rights Reserved.

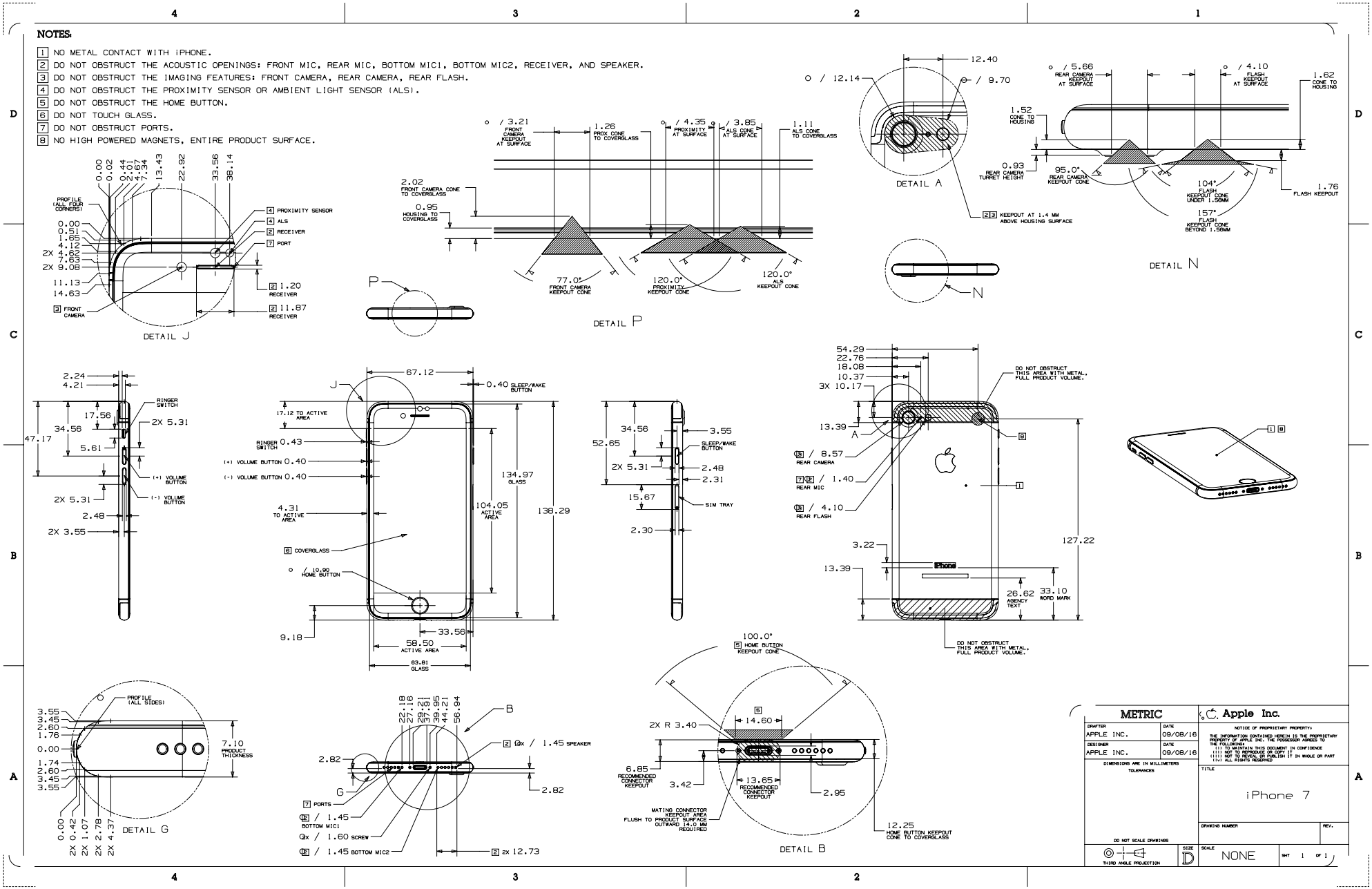
NOTES:
1 NO METAL CONTACT WITH iPHONE.
2 DO NOT OBSTRUCT THE ACOUSTIC OPENINGS: FRONT MIC, REAR MIC, BOTTOM MIC1, BOTTOM MIC2, RECEIVER, AND SPEAKER.
3 DO NOT OBSTRUCT THE IMAGING FEATURES: FRONT CAMERA, REAR CAMERA, REAR FLASH.
4 DO NOT OBSTRUCT THE PROXIMITY SENSOR OR AMBIENT LIGHT SENSOR (ALS).
5 DO NOT OBSTRUCT THE HOME BUTTON.
6 DO NOT TOUCH GLASS.
7 DO NOT OBSTRUCT PORTS.
8 NO HIGH POWERED MAGNETS, ENTIRE PRODUCT SURFACE.
DETAIL J
DETAIL P
DETAIL A
DETAIL N
DETAIL G
DETAIL B
METRIC
Apple Inc.
iPhone 7
NONE

56.53 iPhone 6s Plus

[中文]

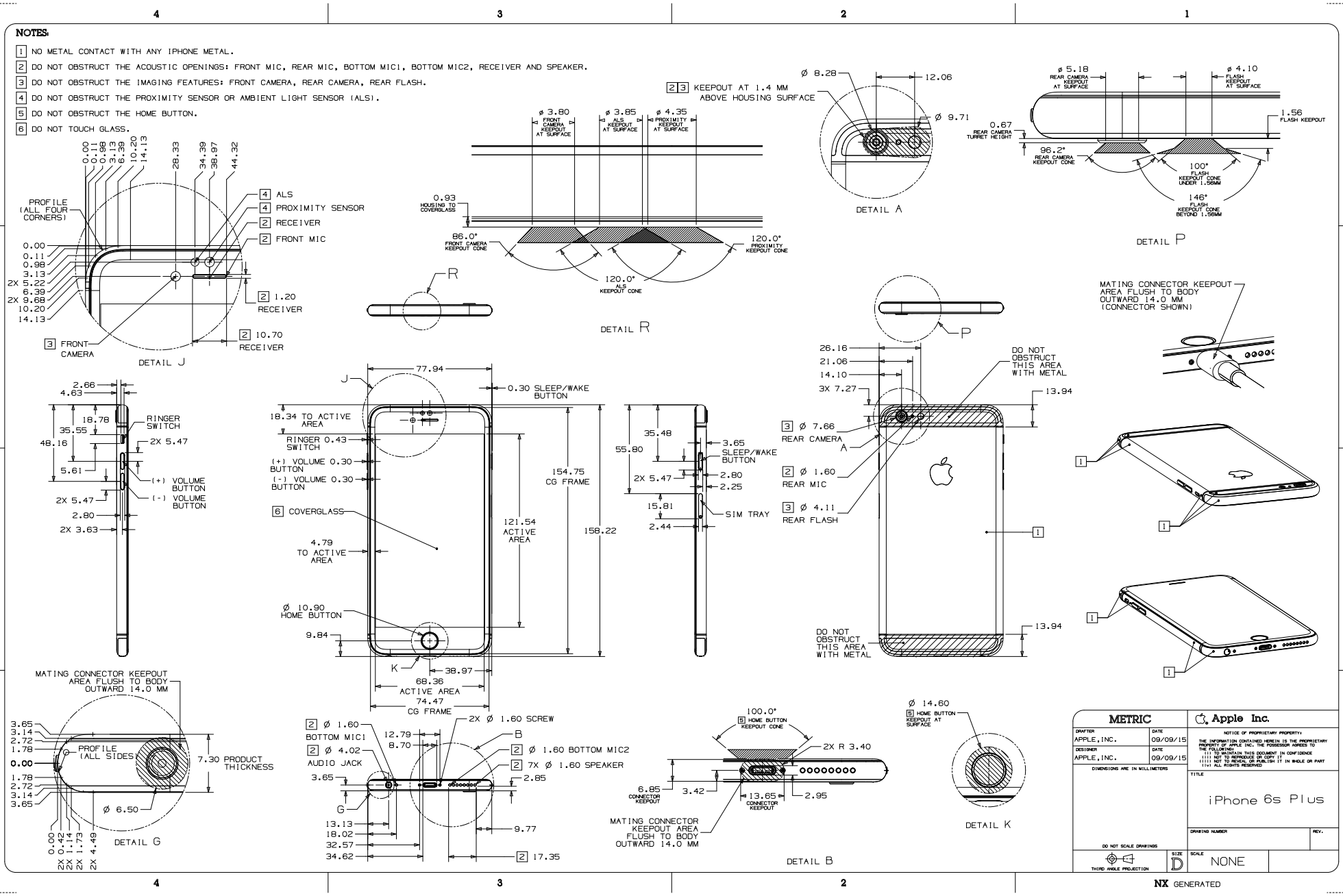

Copyright © 2023 Apple Inc. All Rights Reserved.

56.54 iPhone 6s

[中文]

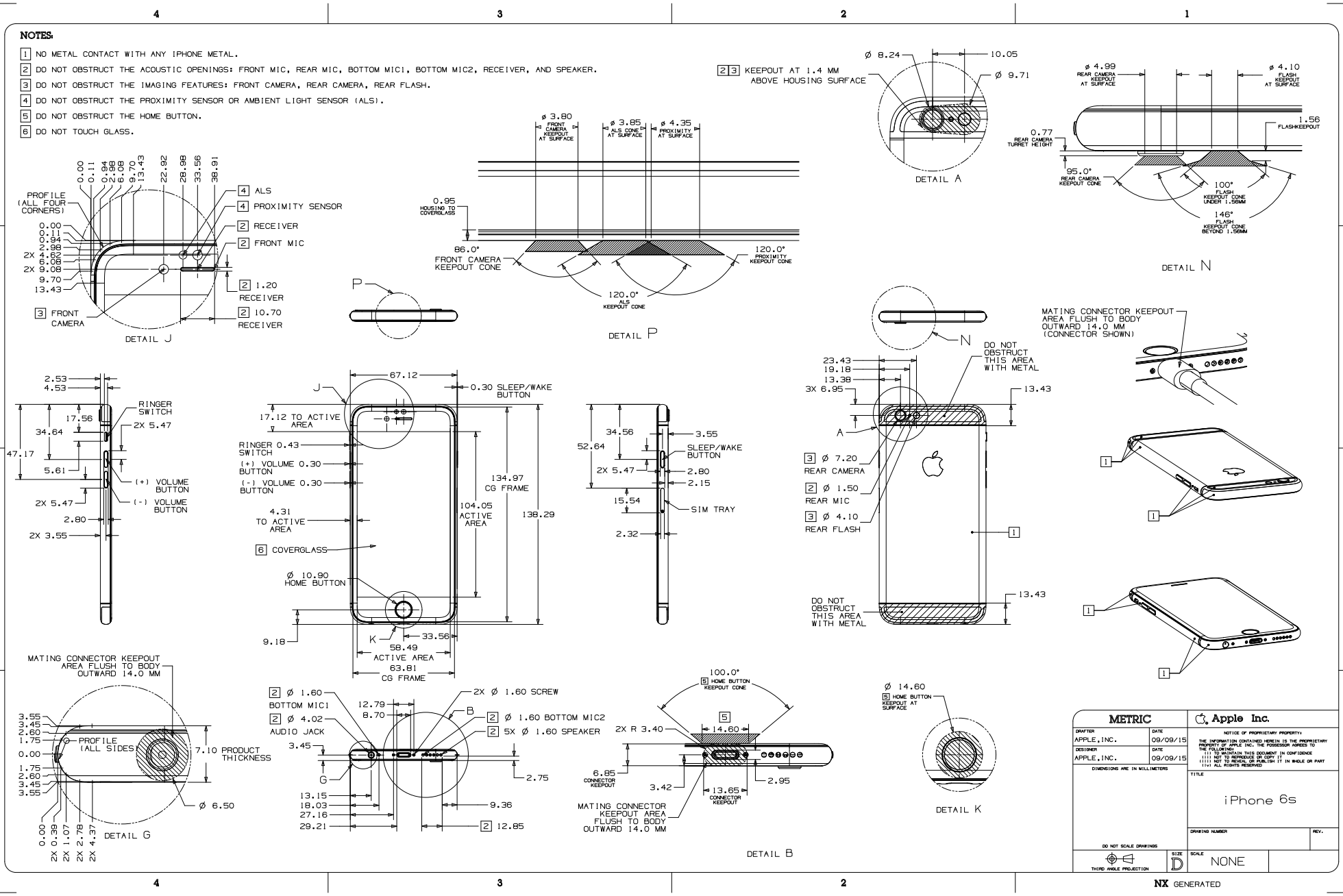

56.55 iPhone 6 Plus

[中文]

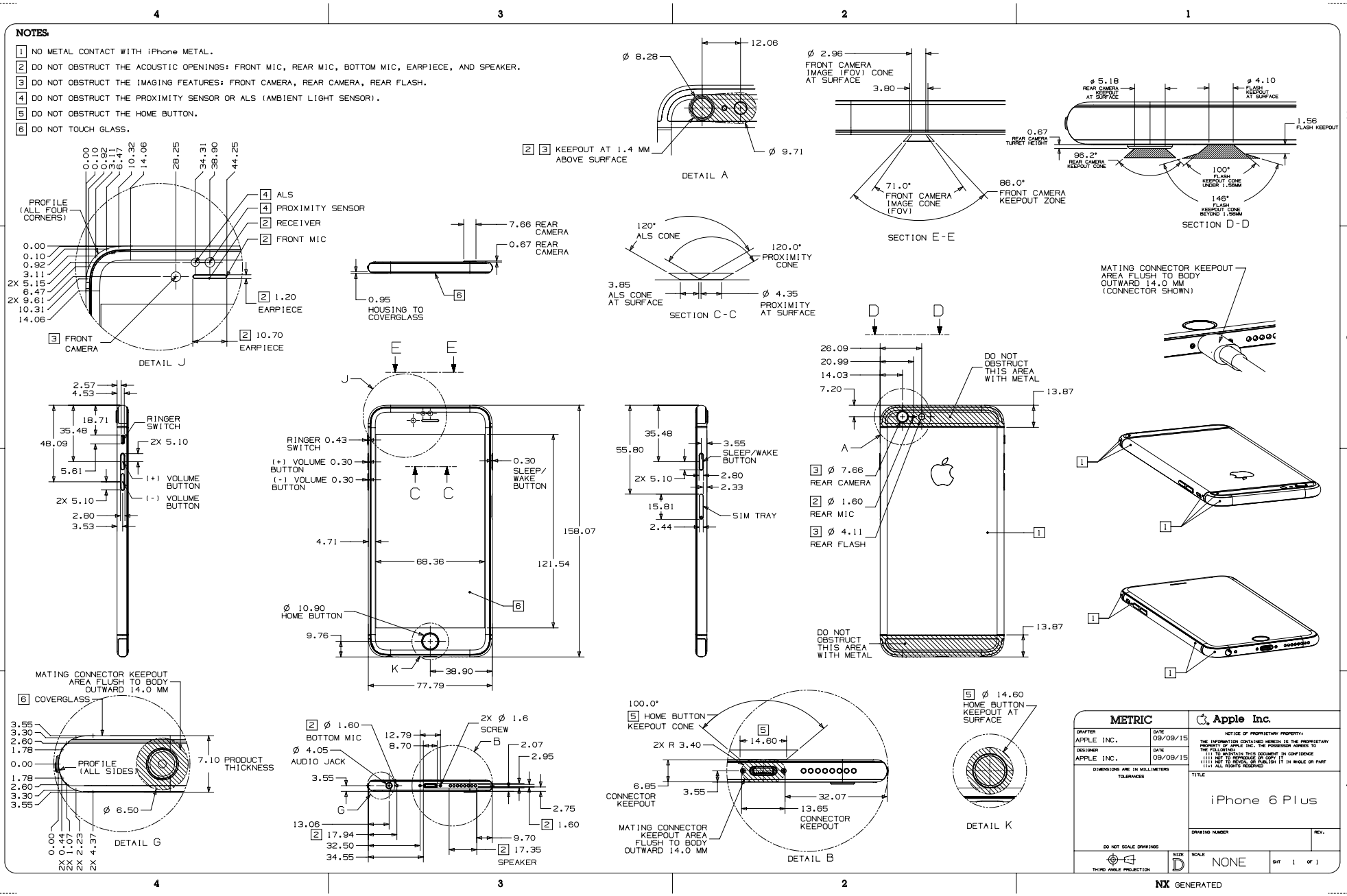

Copyright © 2023 Apple Inc. All Rights Reserved.

56.56 iPhone 6

[中文]

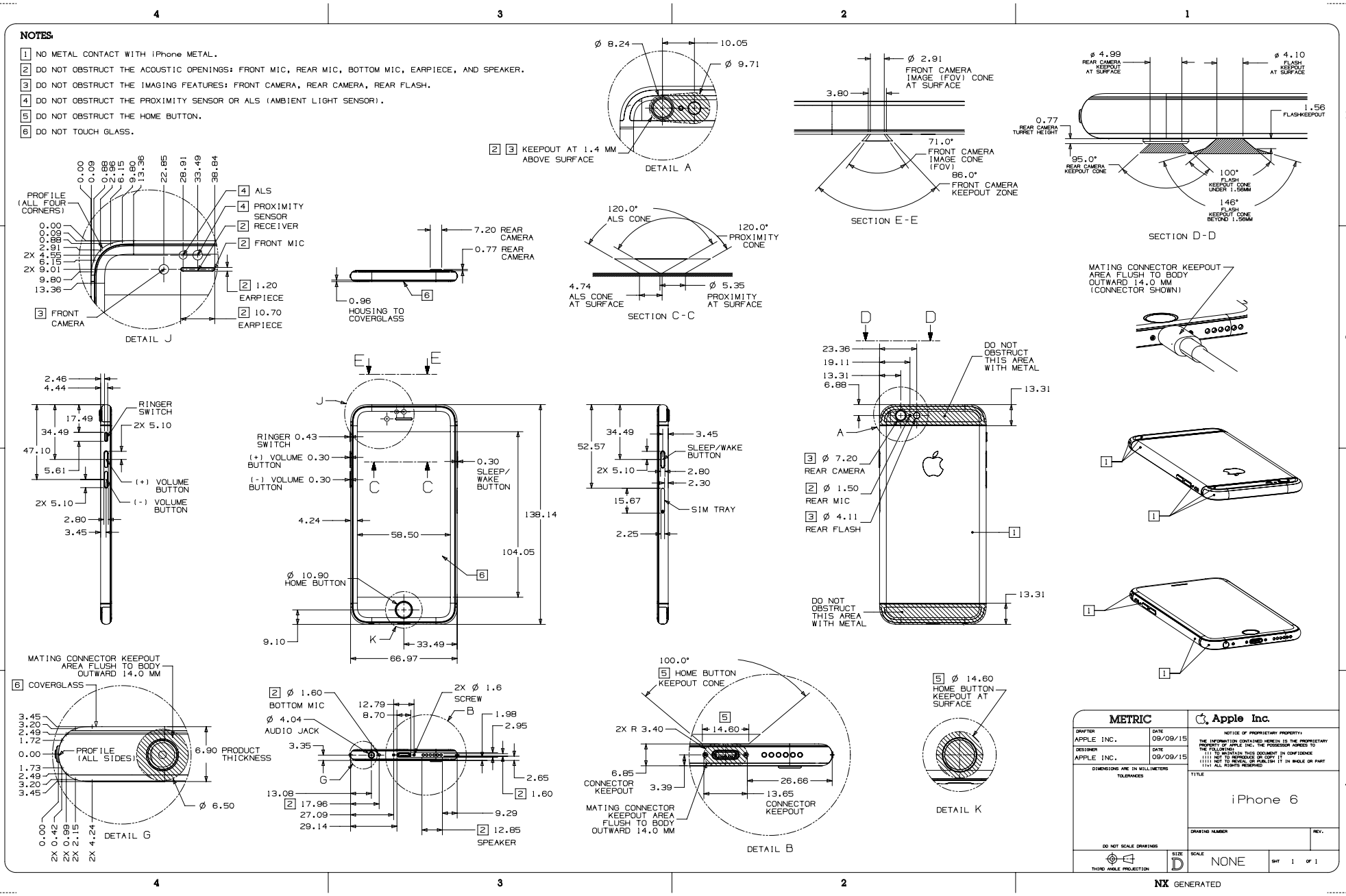

Copyright © 2023 Apple Inc. All Rights Reserved.

56.57 iPhone 5s and iPhone SE

[中文]

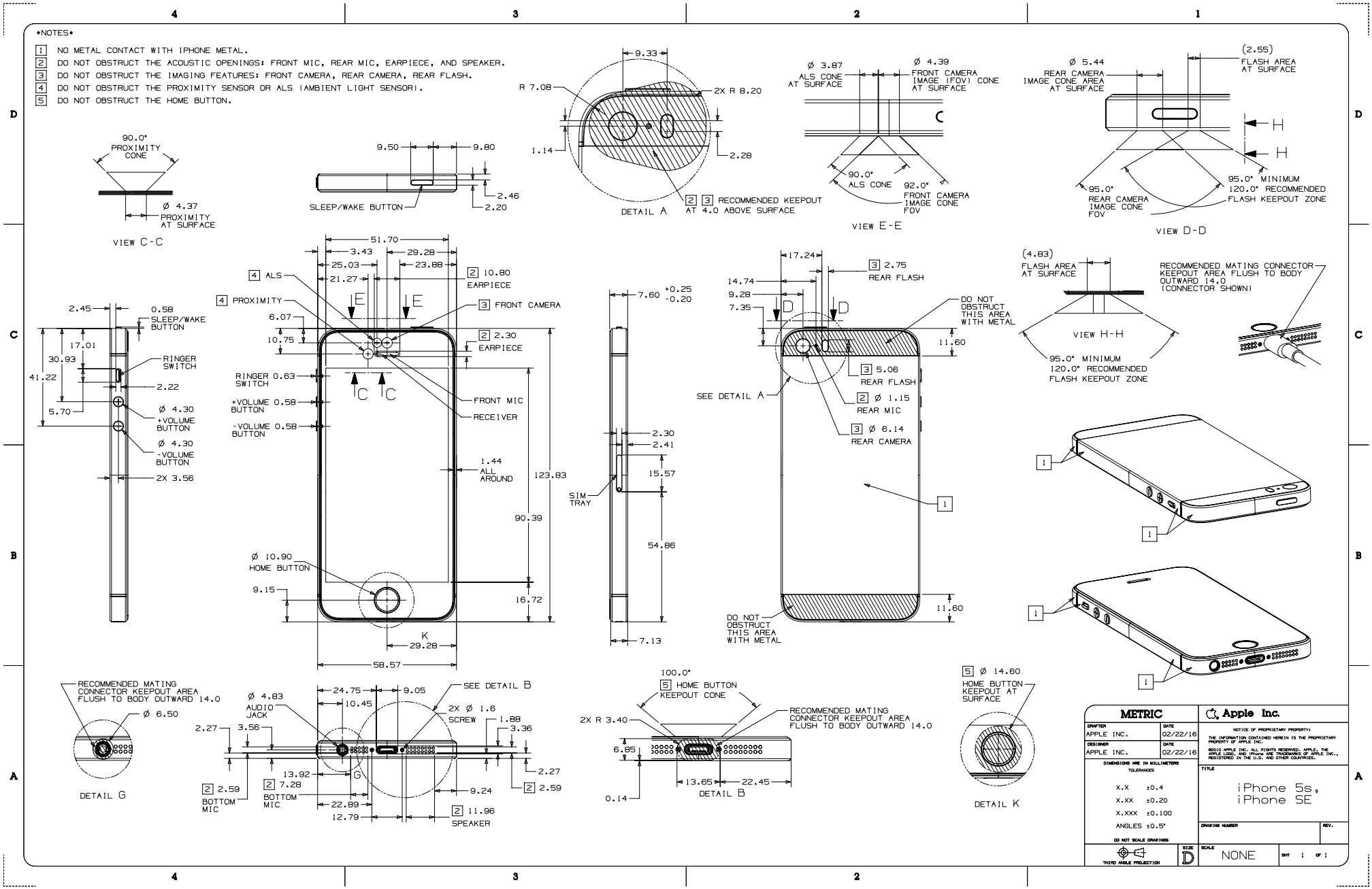

Copyright © 2023 Apple Inc. All Rights Reserved.

56.58 iPhone 5c

[中文]

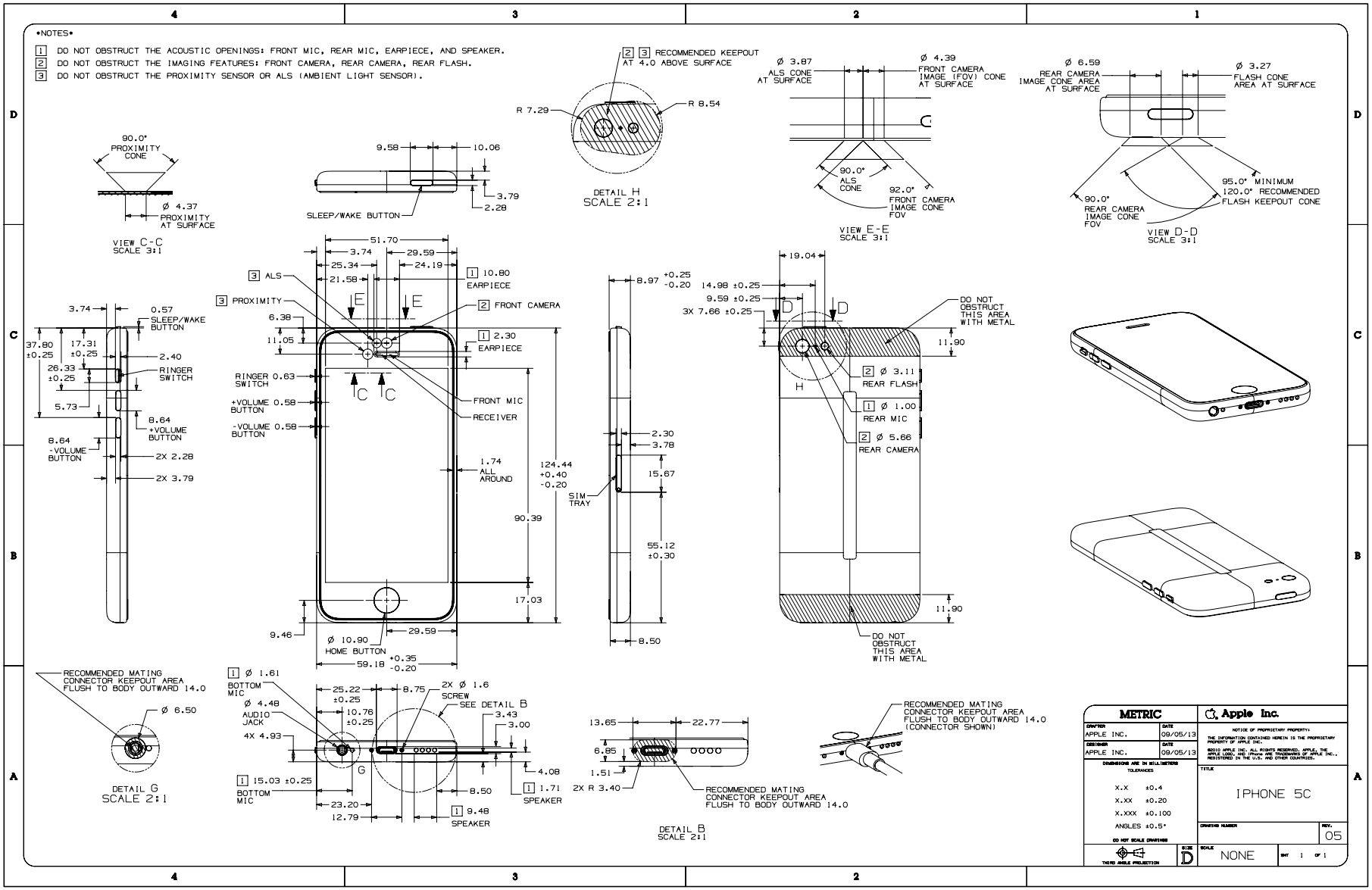

Copyright © 2023 Apple Inc. All Rights Reserved.

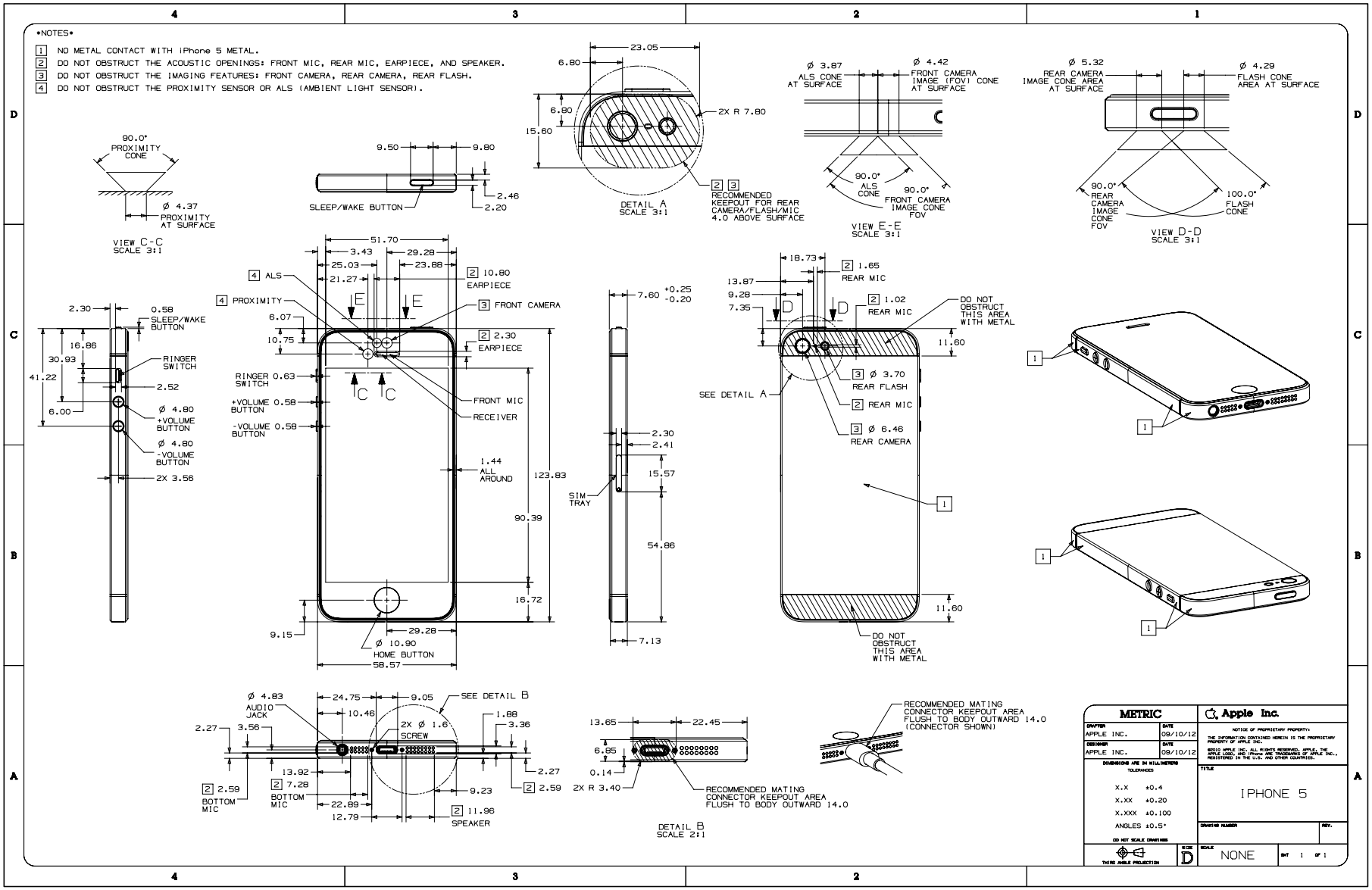

Copyright © 2023 Apple Inc. All Rights Reserved.

56.60 iPad Pro 12.9-inch (6th generation) 1 of 5

[中文]

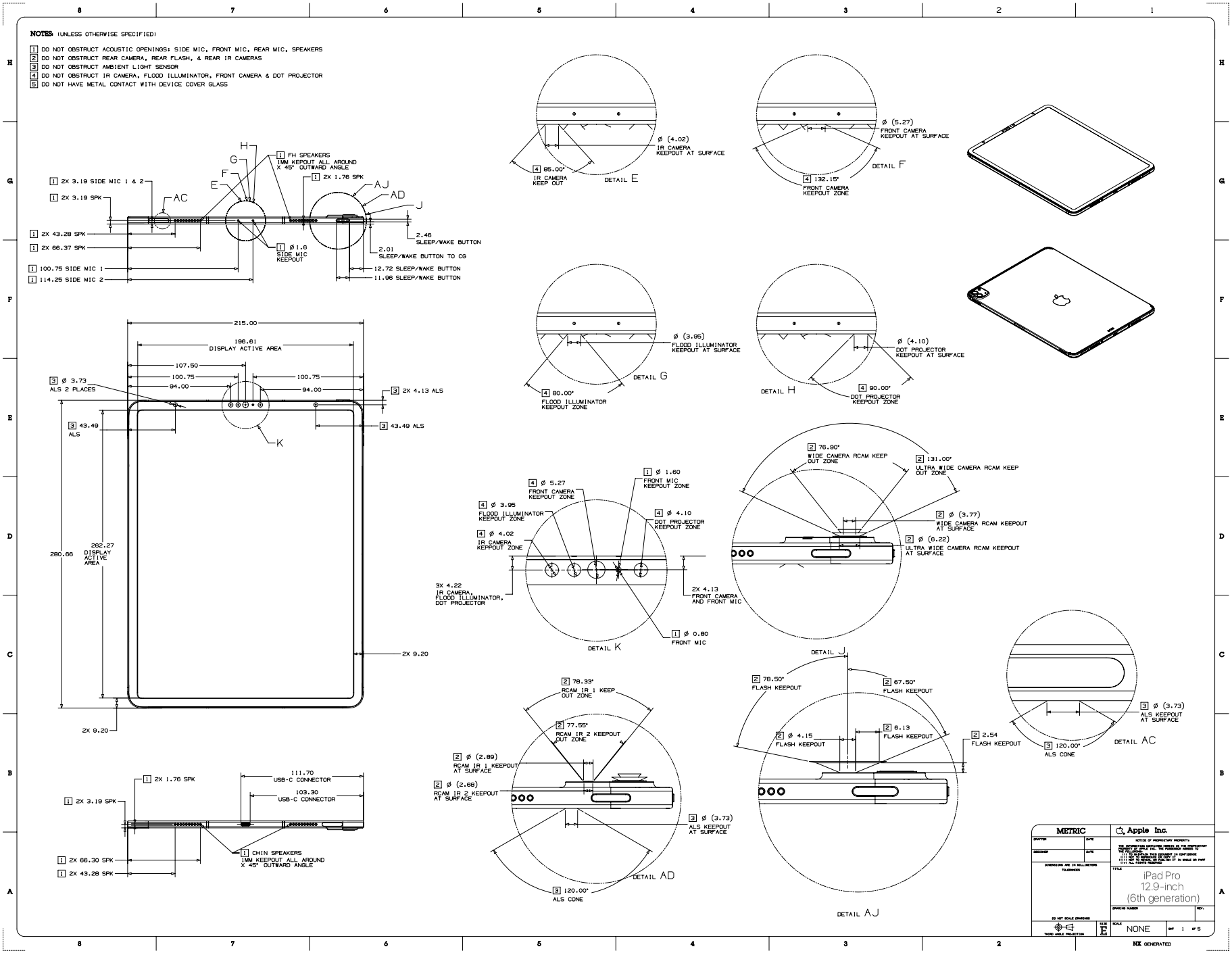

Copyright © 2023 Apple Inc. All Rights Reserved.

56.61 iPad Pro 12.9-inch (6th generation) 2 of 5

[中文]

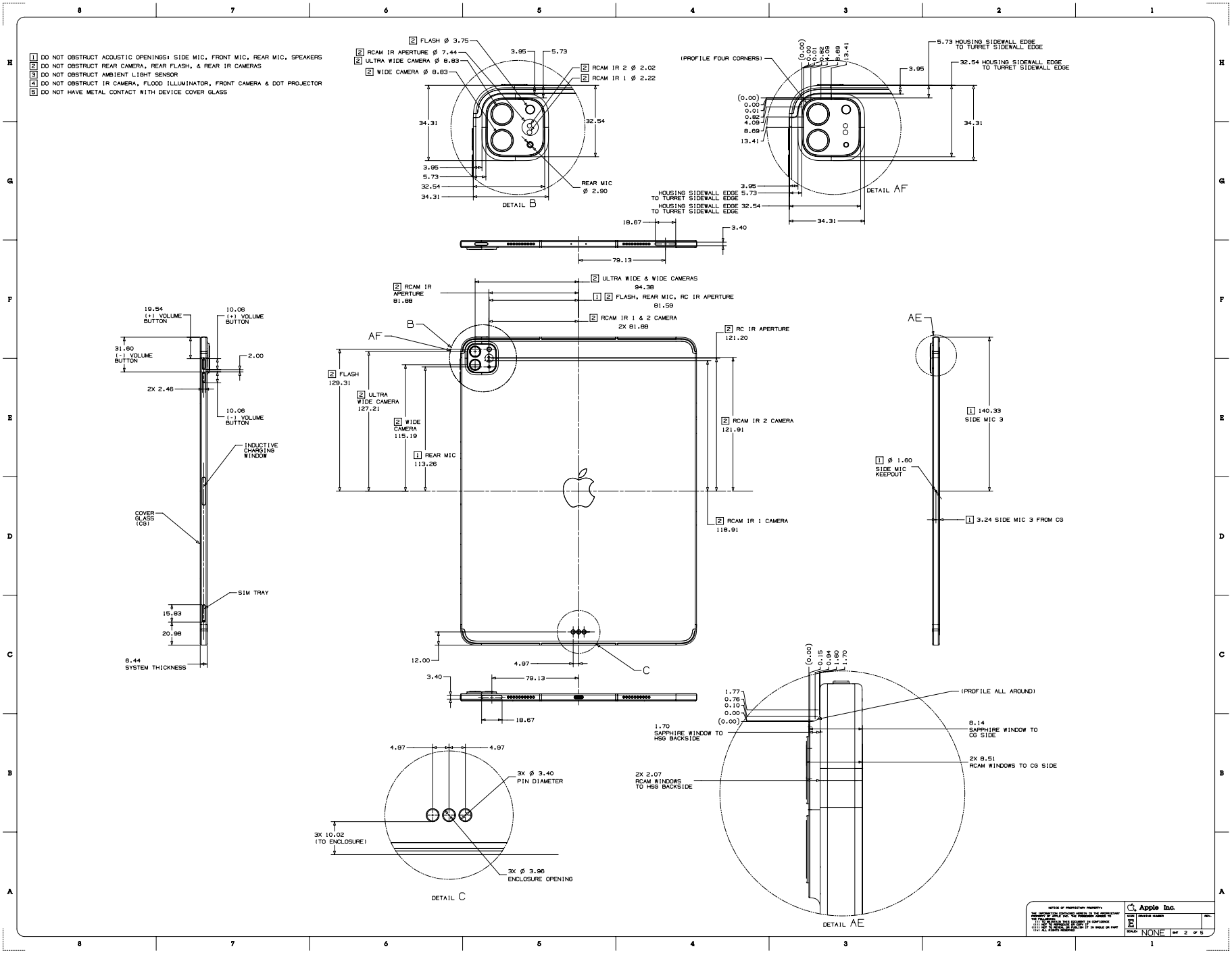

Copyright © 2023 Apple Inc. All Rights Reserved.

56.62 iPad Pro 12.9-inch (6th generation) 3 of 5

[中文]

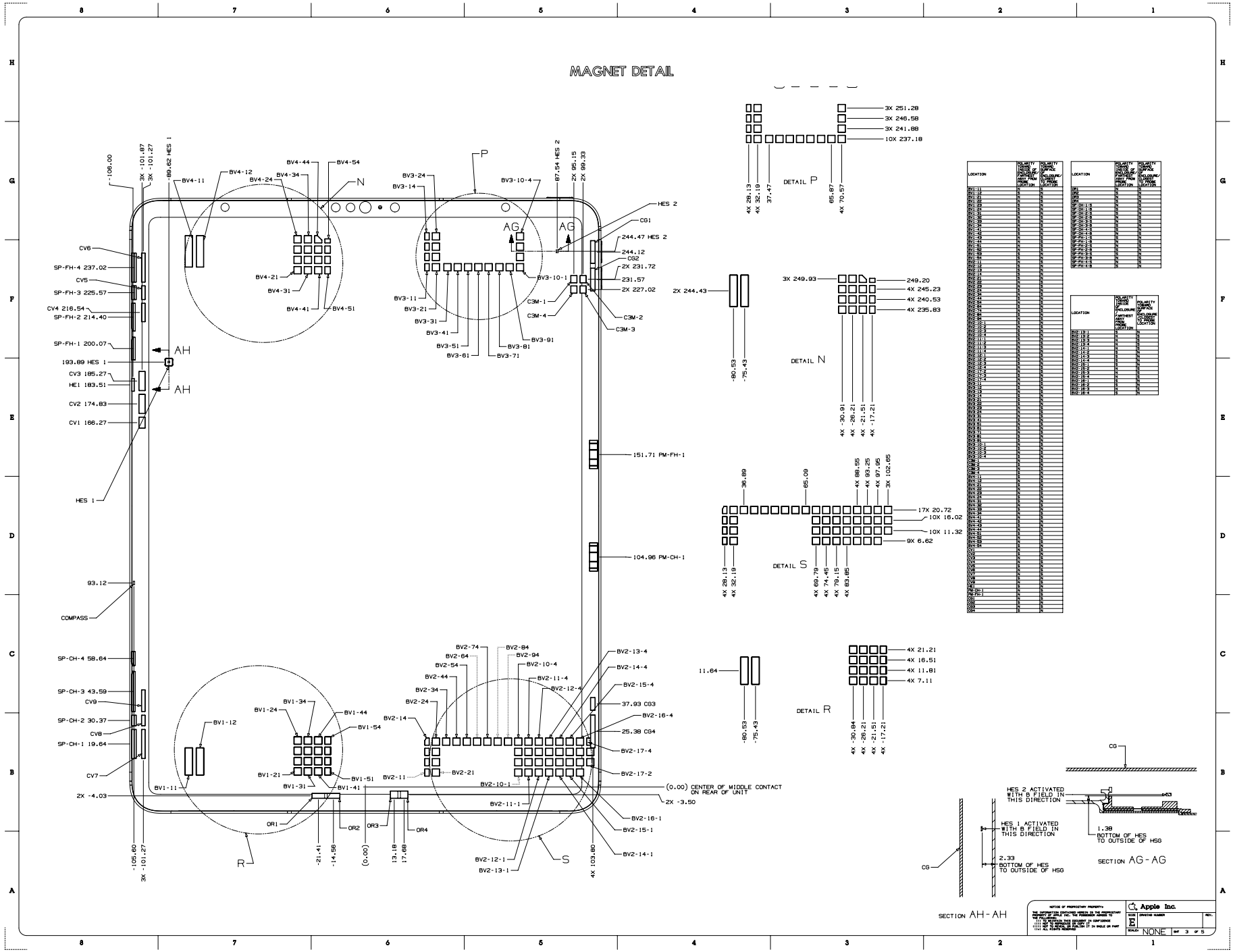

Copyright © 2023 Apple Inc. All Rights Reserved.

56.63 iPad Pro 12.9-inch (6th generation) 4 of 5

[中文]

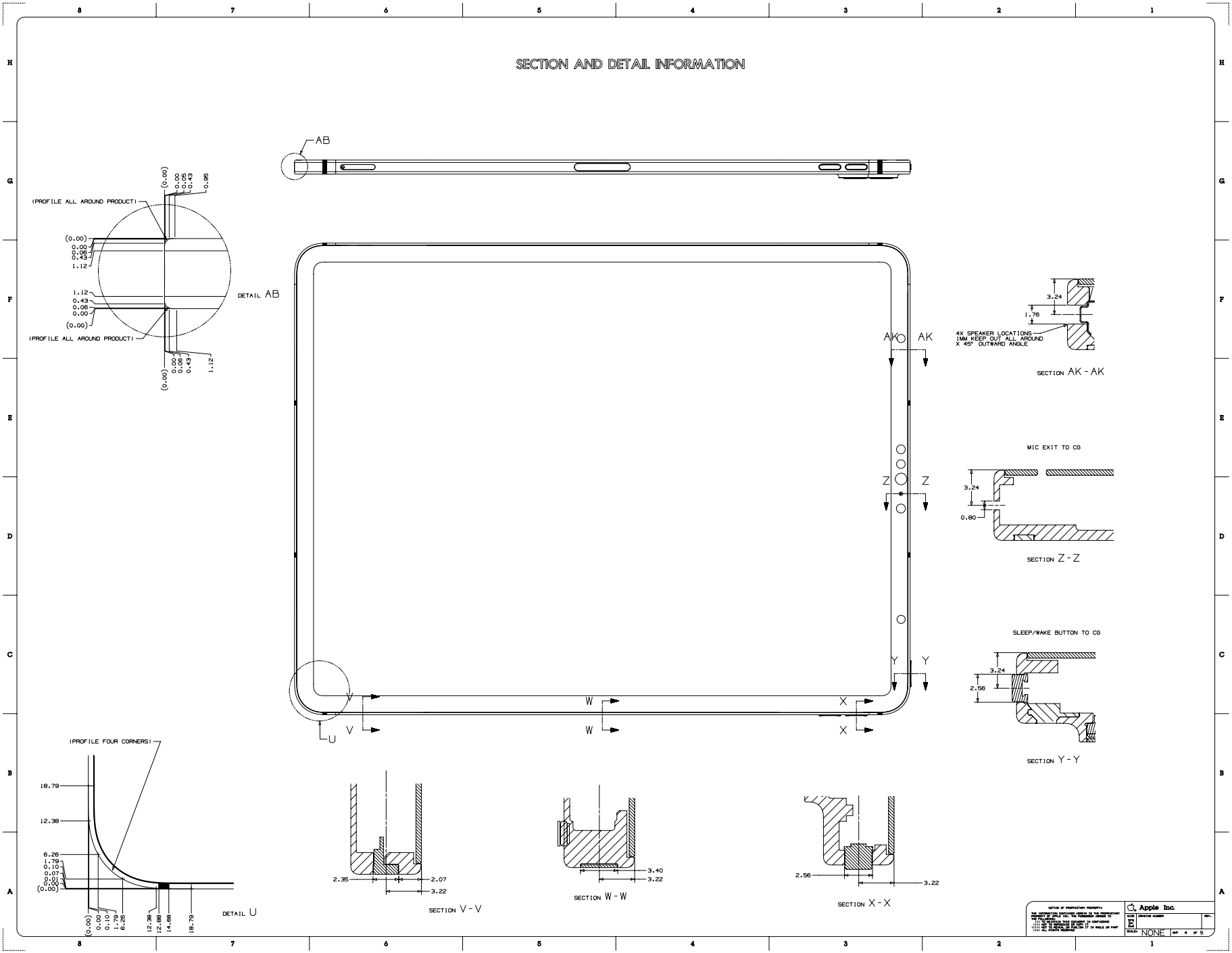

Copyright © 2023 Apple Inc. All Rights Reserved.

56.64 iPad Pro 12.9-inch (6th generation) 5 of 5

[中文]

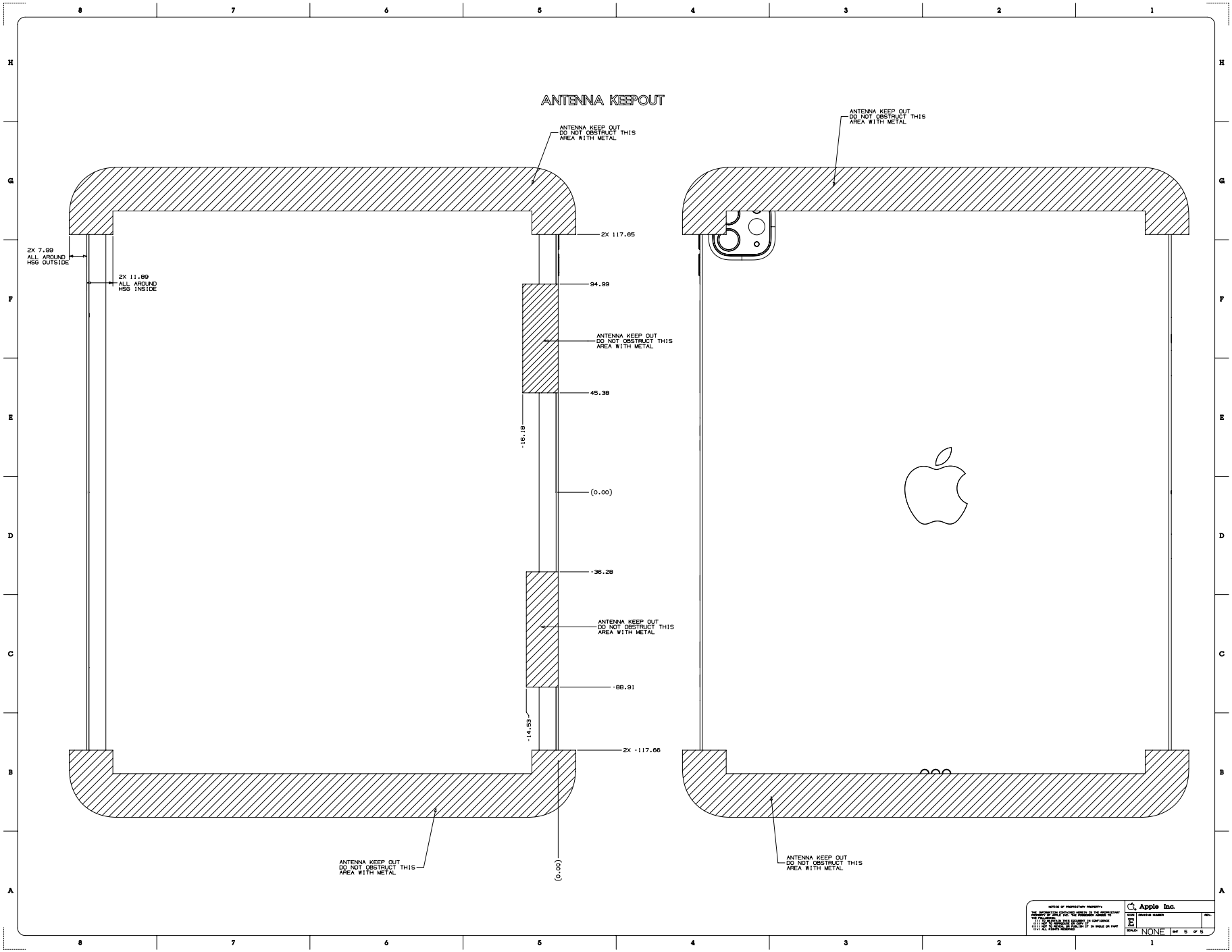

 Copyright © 2023 Apple Inc. All Rights Reserved.

56.65 iPad Pro 11-inch (4th generation) 1 of 5

[中文]

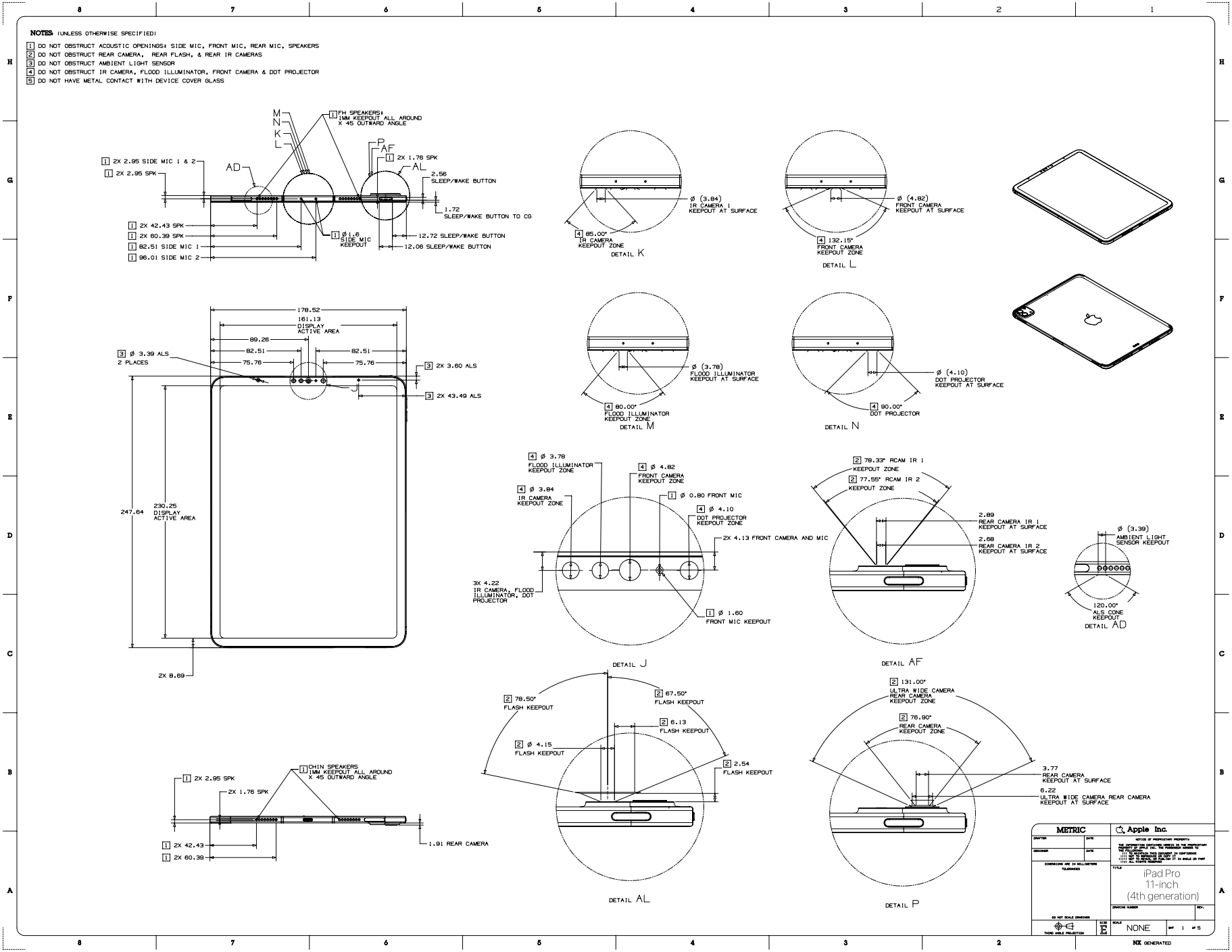

Copyright © 2023 Apple Inc. All Rights Reserved.

56.66 iPad Pro 11-inch (4th generation) 2 of 5

[中文]

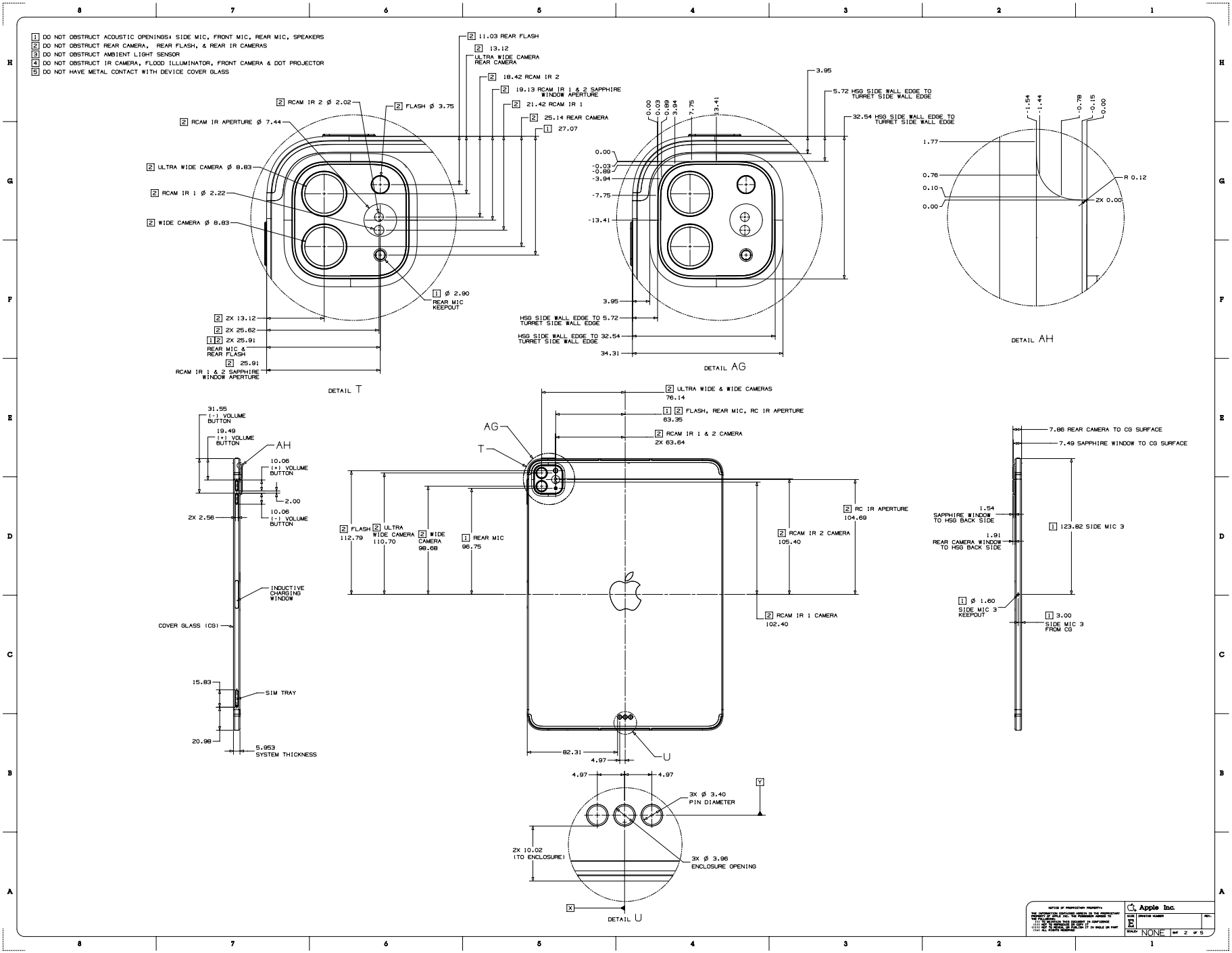

Copyright © 2023 Apple Inc. All Rights Reserved.

56.67 iPad Pro 11-inch (4th generation) 3 of 5

[中文]

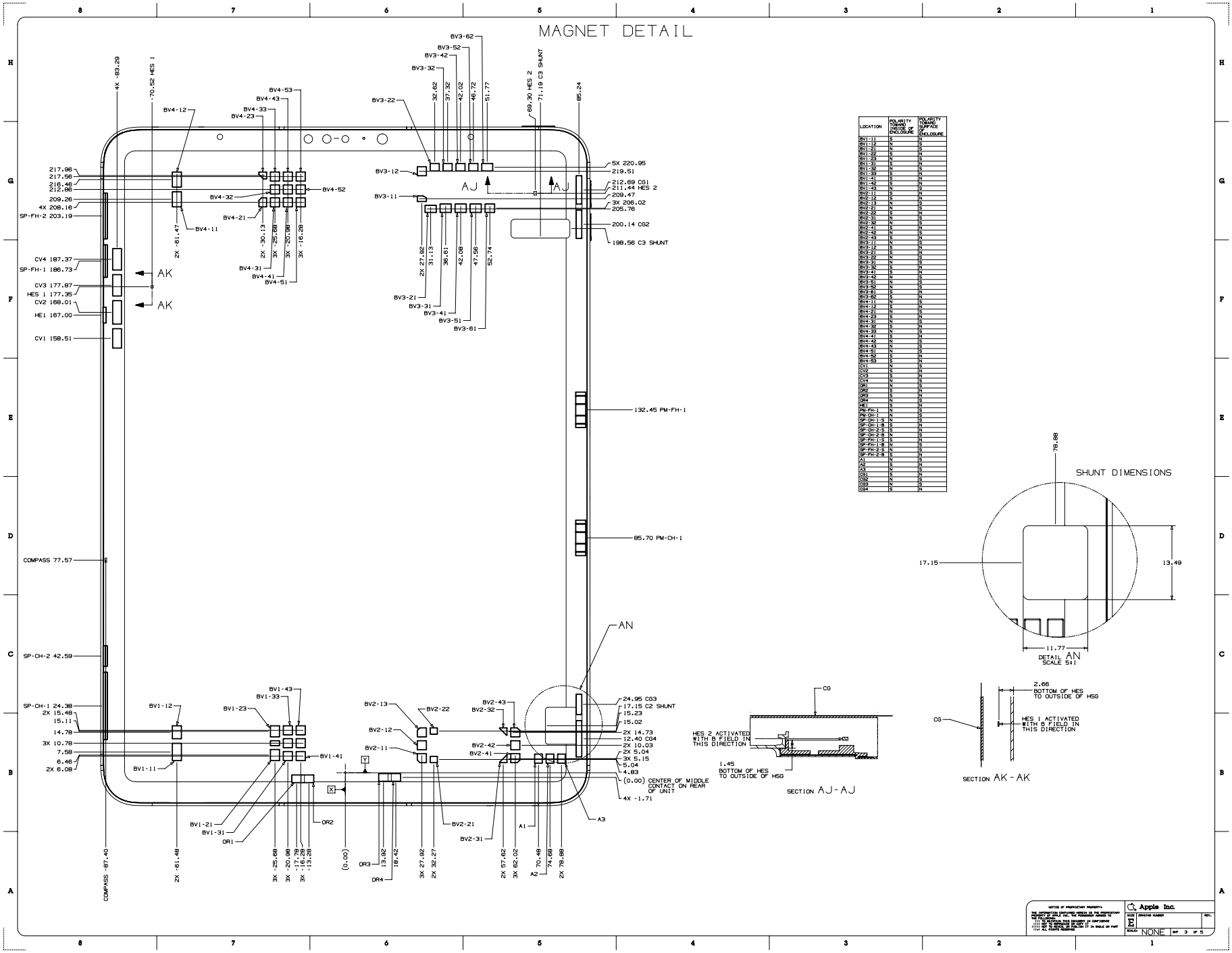

Copyright © 2023 Apple Inc. All Rights Reserved.

56.68 iPad Pro 11-inch (4th generation) 4 of 5

[中文]

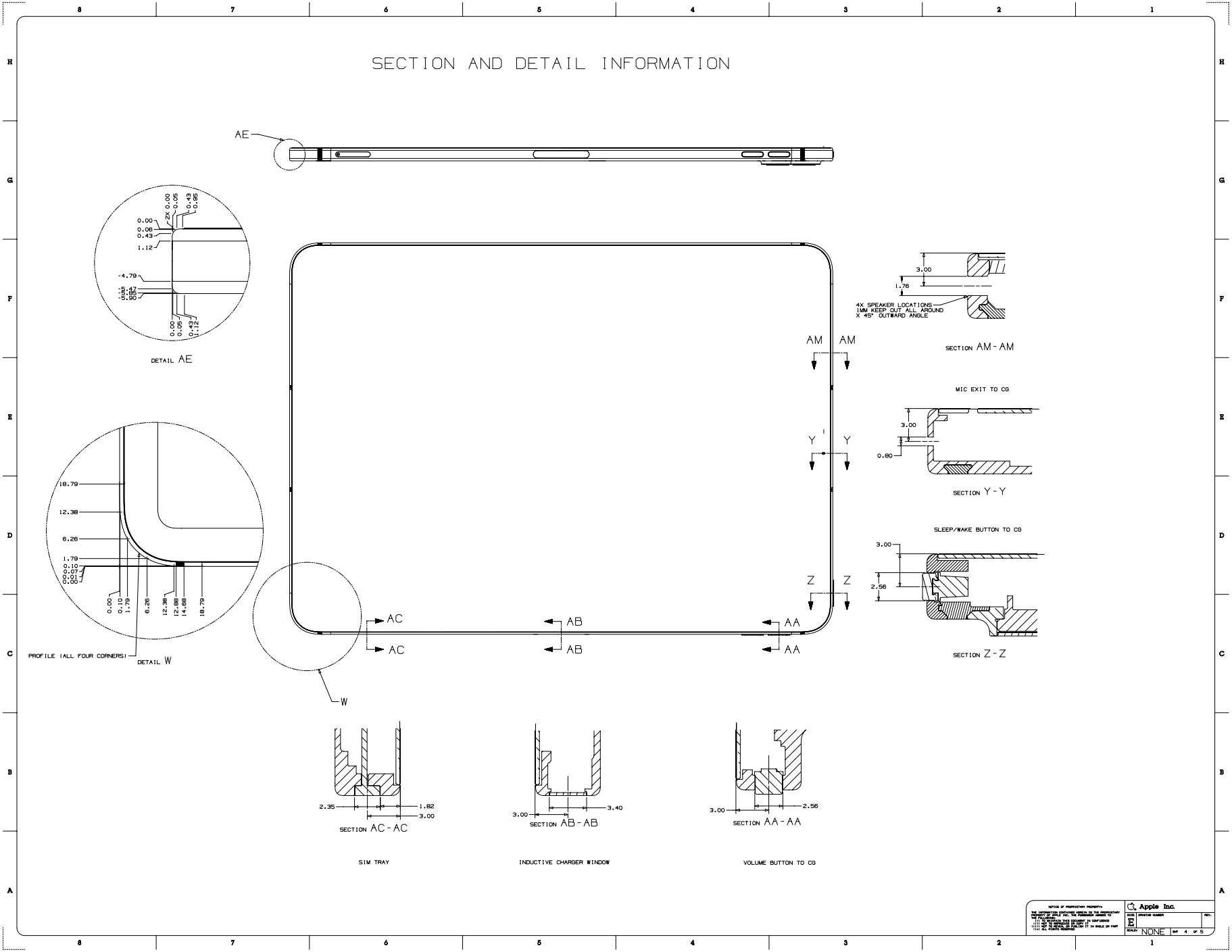

Copyright © 2023 Apple Inc. All Rights Reserved.

56.69 iPad Pro 11-inch (4th generation) 5 of 5

[中文]

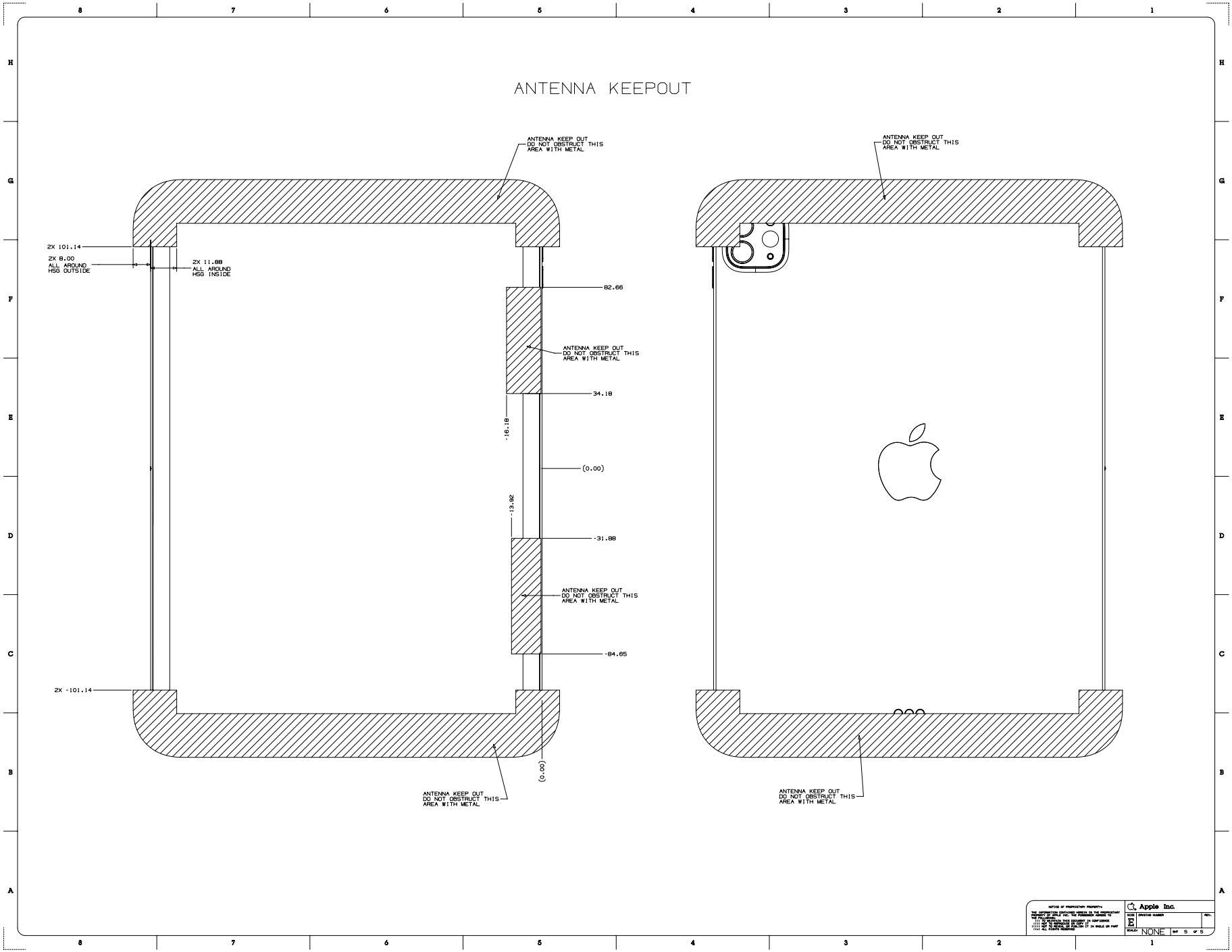

Copyright © 2023 Apple Inc. All Rights Reserved.

56.70 iPad (10th generation) 1 of 6

[中文]

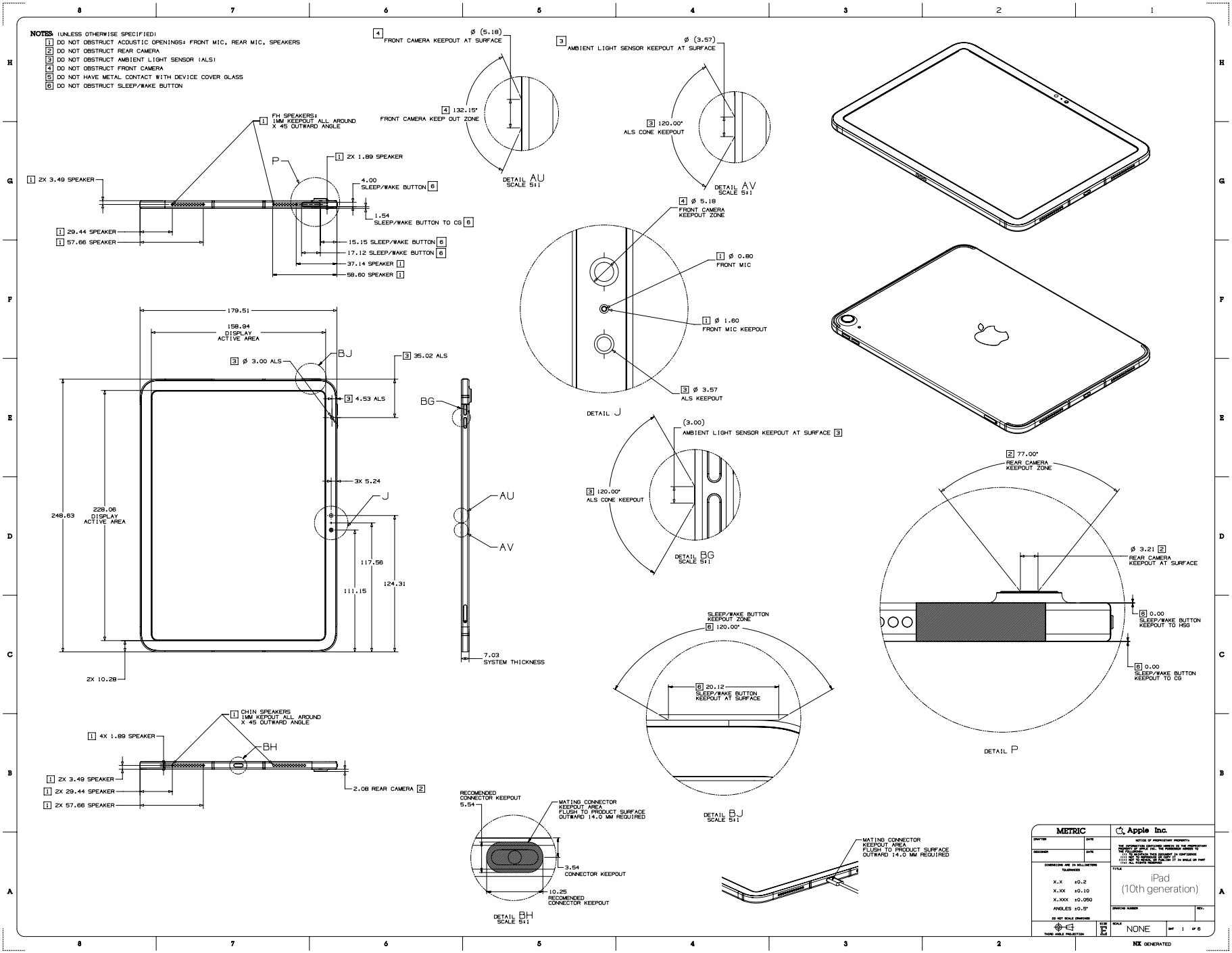

Copyright © 2023 Apple Inc. All Rights Reserved.

56.71 iPad (10th generation) 2 of 6

[中文]

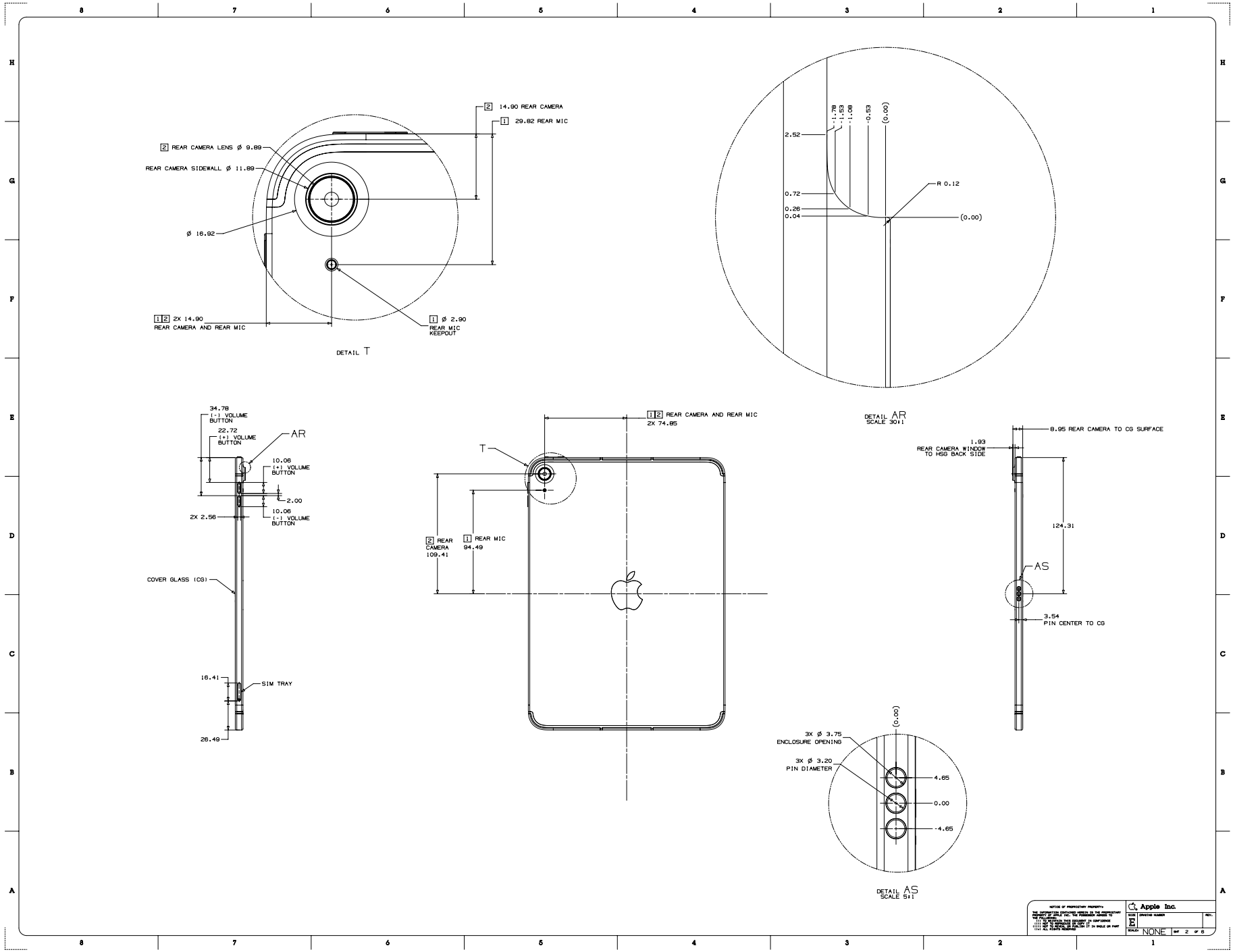

Copyright © 2023 Apple Inc. All Rights Reserved.

56.72 iPad (10th generation) 3 of 6

[中文]

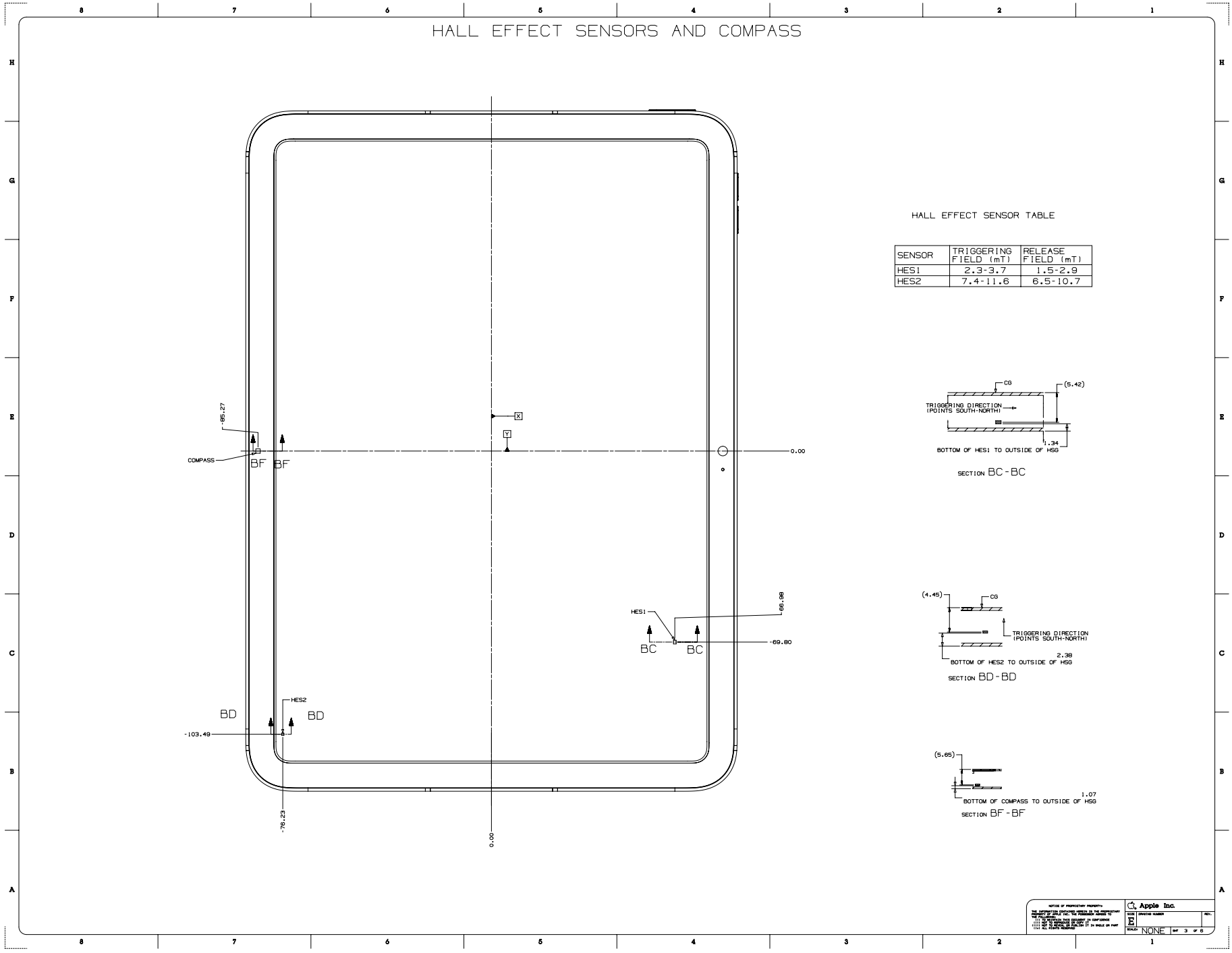

Copyright © 2023 Apple Inc. All Rights Reserved.

56.73 iPad (10th generation) 4 of 6

[中文]

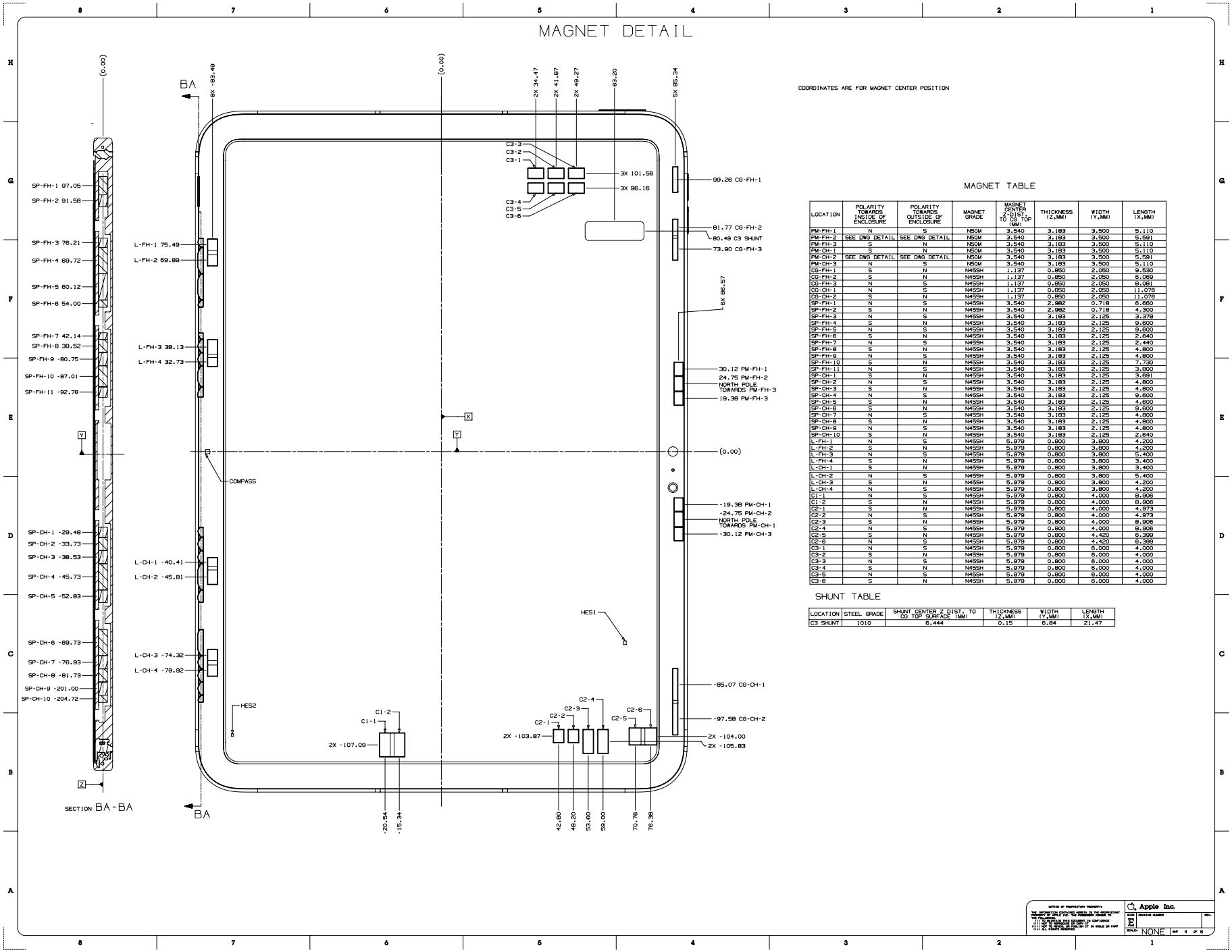

MAGNET TABLE

LOCATION	POLARITY TOWARDS INSIDE OF ENCLOSURE	POLARITY TOWARDS OUTSIDE OF ENCLOSURE	MAGNET GRADE	MAGNET CENTER Z DIST. TO CG TOP (MM)	THICKNESS (Z,MM)	WIDTH (Y,MM)	LENGTH (X,MM)
PM-FH-1	N	S	N50M	3.540	3.183	3.500	5.110
PM-FH-2	SEE DWG DETAIL	SEE DWG DETAIL	N50M	3.540	3.183	3.500	5.591
PM-FH-3	S	N	N50M	3.540	3.183	3.500	5.110
PM-CH-1	S	N	N50M	3.540	3.183	3.500	5.110
PM-CH-2	SEE DWG DETAIL	SEE DWG DETAIL	N50M	3.540	3.183	3.500	5.591
PM-CH-3	N	S	N50M	3.540	3.183	3.500	5.110
CG-FH-1	S	N	N45SH	1.137	0.850	2.050	9.530
CG-FH-2	S	N	N45SH	1.137	0.850	2.050	8.069
CG-FH-3	N	S	N45SH	1.137	0.850	2.050	8.081
CG-CH-1	N	S	N45SH	1.137	0.850	2.050	11.076
CG-CH-2	S	N	N45SH	1.137	0.850	2.050	11.076
SP-FH-1	N	S	N45SH	3.540	2.962	0.718	6.880
SP-FH-2	S	N	N45SH	3.540	2.962	0.718	4.300
SP-FH-3	N	S	N45SH	3.540	3.183	2.125	3.378
SP-FH-4	S	N	N45SH	3.540	3.183	2.125	9.600
SP-FH-5	N	S	N45SH	3.540	3.183	2.125	9.600
SP-FH-6	S	N	N45SH	3.540	3.183	2.125	2.640
SP-FH-7	N	S	N45SH	3.540	3.183	2.125	2.440
SP-FH-8	S	N	N45SH	3.540	3.183	2.125	4.800
SP-FH-9	N	S	N45SH	3.540	3.183	2.125	4.800
SP-FH-10	S	N	N45SH	3.540	3.183	2.125	7.730
SP-FH-11	N	S	N45SH	3.540	3.183	2.125	3.800
SP-CH-1	S	N	N45SH	3.540	3.183	2.125	3.691
SP-CH-2	N	S	N45SH	3.540	3.183	2.125	4.800
SP-CH-3	S	N	N45SH	3.540	3.183	2.125	4.800
SP-CH-4	N	S	N45SH	3.540	3.183	2.125	9.600
SP-CH-5	S	N	N45SH	3.540	3.183	2.125	4.800
SP-CH-6	S	N	N45SH	3.540	3.183	2.125	9.600
SP-CH-7	N	S	N45SH	3.540	3.183	2.125	4.800
SP-CH-8	S	N	N45SH	3.540	3.183	2.125	4.800
SP-CH-9	N	S	N45SH	3.540	3.183	2.125	4.800
SP-CH-10	S	N	N45SH	3.540	3.183	2.125	2.640
L-FH-1	N	S	N45SH	5.979	0.800	3.800	4.200
L-FH-2	S	N	N45SH	5.979	0.800	3.800	4.200
L-FH-3	N	S	N45SH	5.979	0.800	3.800	5.400
L-FH-4	S	N	N45SH	5.979	0.800	3.800	3.400
L-CH-1	S	N	N45SH	5.979	0.800	3.800	3.400
L-CH-2	N	S	N45SH	5.979	0.800	3.800	5.400
L-CH-3	S	N	N45SH	5.979	0.800	3.800	4.200
L-CH-4	N	S	N45SH	5.979	0.800	3.800	4.200
C1-1	N	S	N45SH	5.979	0.800	4.000	8.906
C1-2	S	N	N45SH	5.979	0.800	4.000	8.906
C2-1	S	N	N45SH	5.979	0.800	4.000	4.973
C2-2	N	S	N45SH	5.979	0.800	4.000	4.973
C2-3	S	N	N45SH	5.979	0.800	4.000	8.906
C2-4	N	S	N45SH	5.979	0.800	4.000	8.906
C2-5	S	N	N45SH	5.979	0.800	4.420	6.399
C2-6	N	S	N45SH	5.979	0.800	4.420	6.399
C3-1	N	S	N45SH	5.979	0.800	6.000	4.000
C3-2	S	N	N45SH	5.979	0.800	6.000	4.000
C3-3	N	S	N45SH	5.979	0.800	6.000	4.000
C3-4	N	S	N45SH	5.979	0.800	6.000	4.000
C3-5	N	S	N45SH	5.979	0.800	6.000	4.000
C3-6	S	N	N45SH	5.979	0.800	6.000	4.000

SHUNT TABLE

LOCATION	STEEL GRADE	SHUNT CENTER Z DIST. TO CG TOP SURFACE (MM)	THICKNESS (Z,MM)	WIDTH (Y,MM)	LENGTH (X,MM)
C3 SHUNT	1010	6.444	0.15	6.84	21.47

NOTICE OF PROPRIETARY PROPERTY
THE INFORMATION CONTAINED HEREIN IS THE PROPRIETARY PROPERTY OF APPLE INC. THE POSSESSOR AGREES TO:
(1) NOT REPRODUCE, COPY OR USE THIS DOCUMENT IN CONFIDENCE
(2) NOT DISCLOSE TO OTHERS IN WHOLE OR IN PART
(3) USE FOR REFERENCE PURPOSES ONLY
(4) RETURN ON REQUEST
ALL RIGHTS RESERVED.

Apple Inc.

SIZE E | DRAWING NUMBER | REV

SCALE NONE | SHT 4 OF 6

56.74 iPad (10th generation) 5 of 6

[中文]

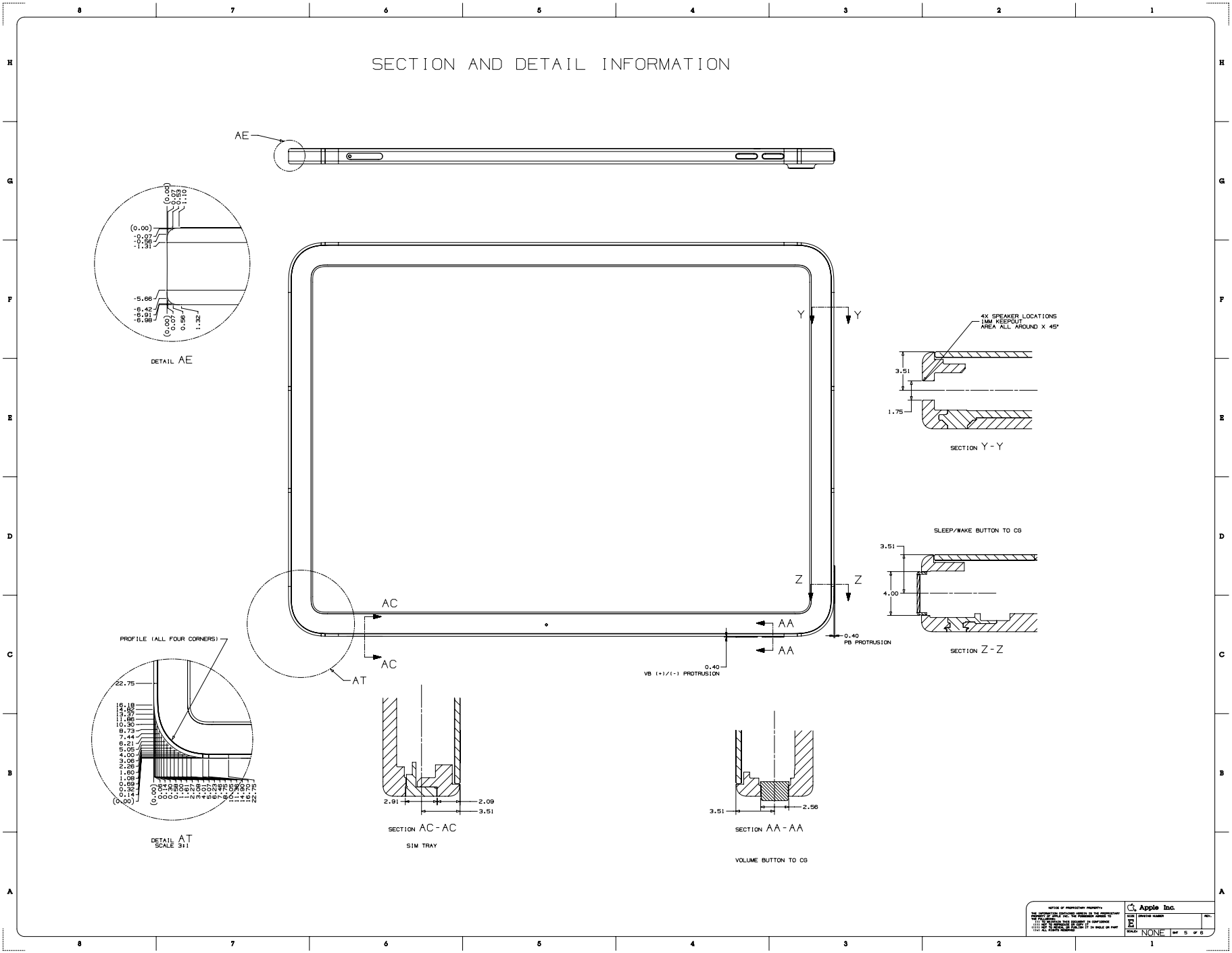

Copyright © 2023 Apple Inc. All Rights Reserved.

56.75 iPad (10th generation) 6 of 6

[中文]

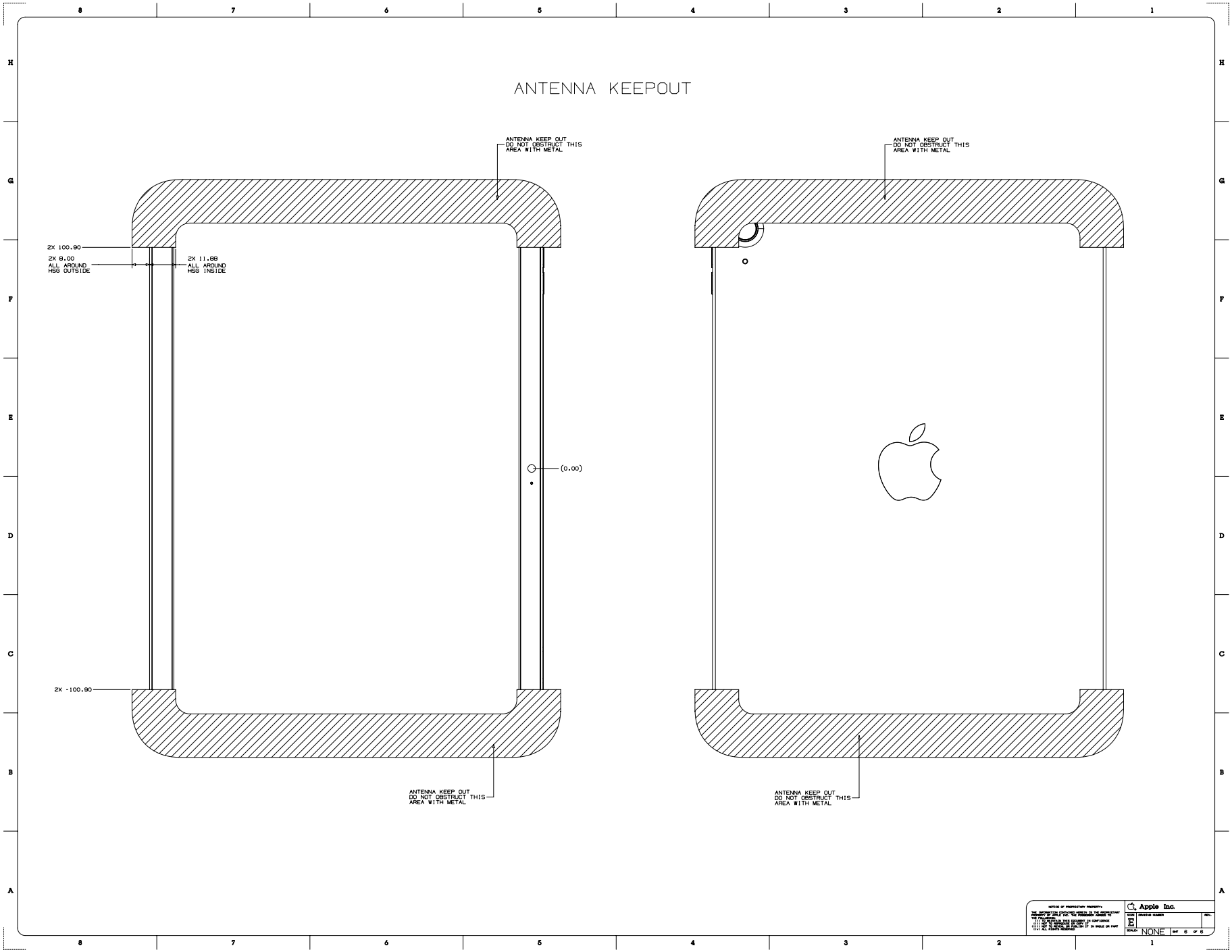

Copyright © 2023 Apple Inc. All Rights Reserved.

56.76 iPad Air (5th generation) and iPad Air (4th generation) 1 of 5 [中文]

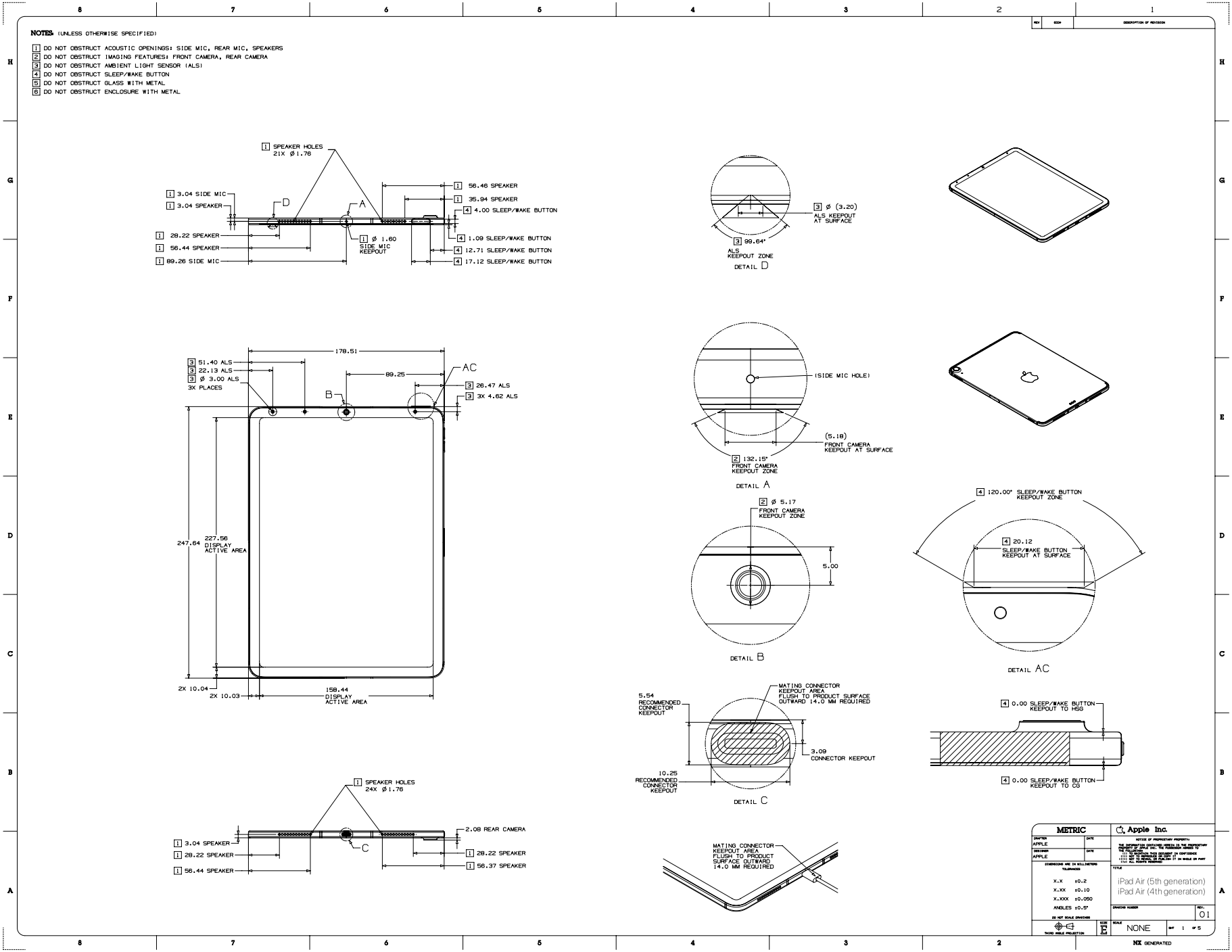

Copyright © 2023 Apple Inc. All Rights Reserved.

56.77 iPad Air (5th generation) and iPad Air (4th generation) 2 of 5

[中文]

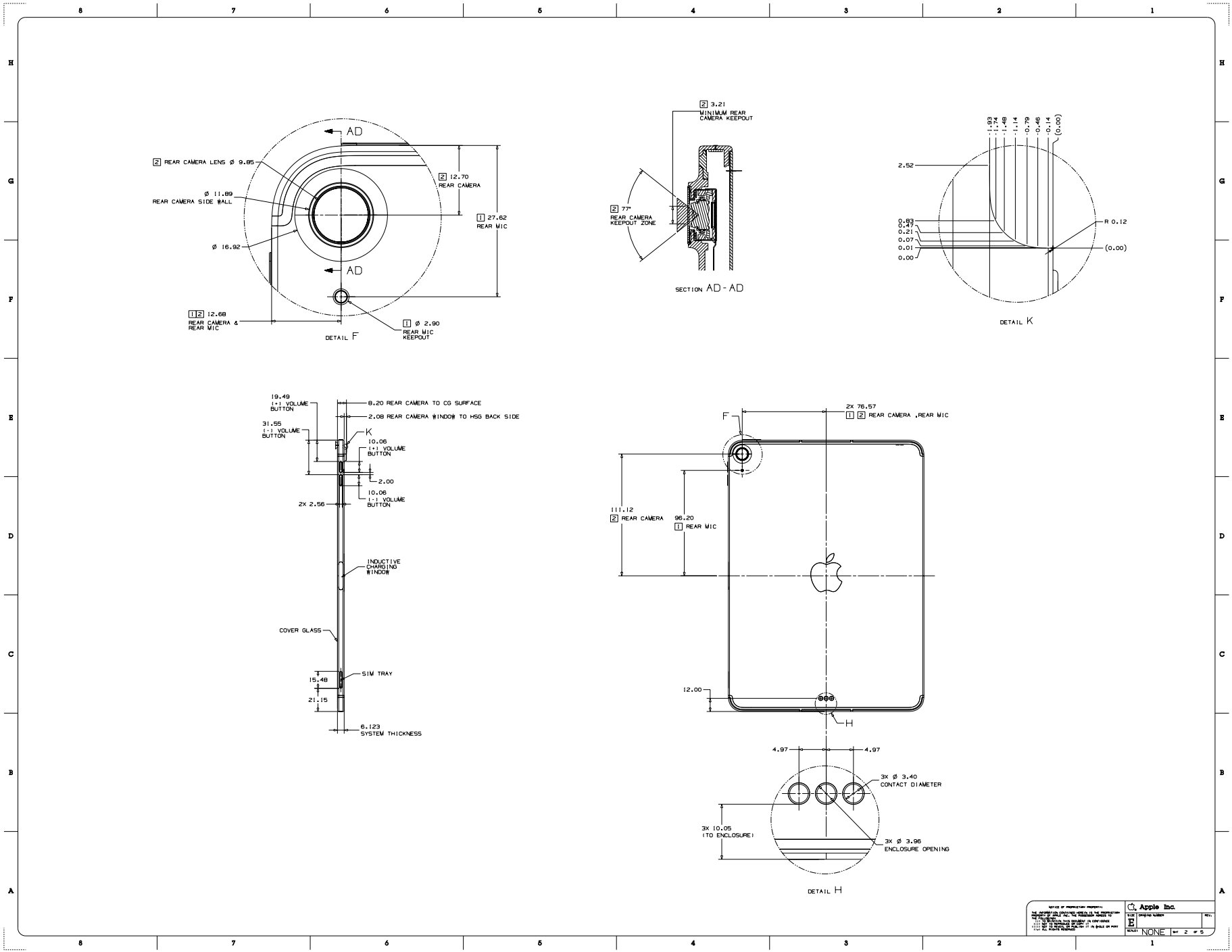

Copyright © 2023 Apple Inc. All Rights Reserved.

56.78 iPad Air (5th generation) and iPad Air (4th generation) 3 of 5

[中文]

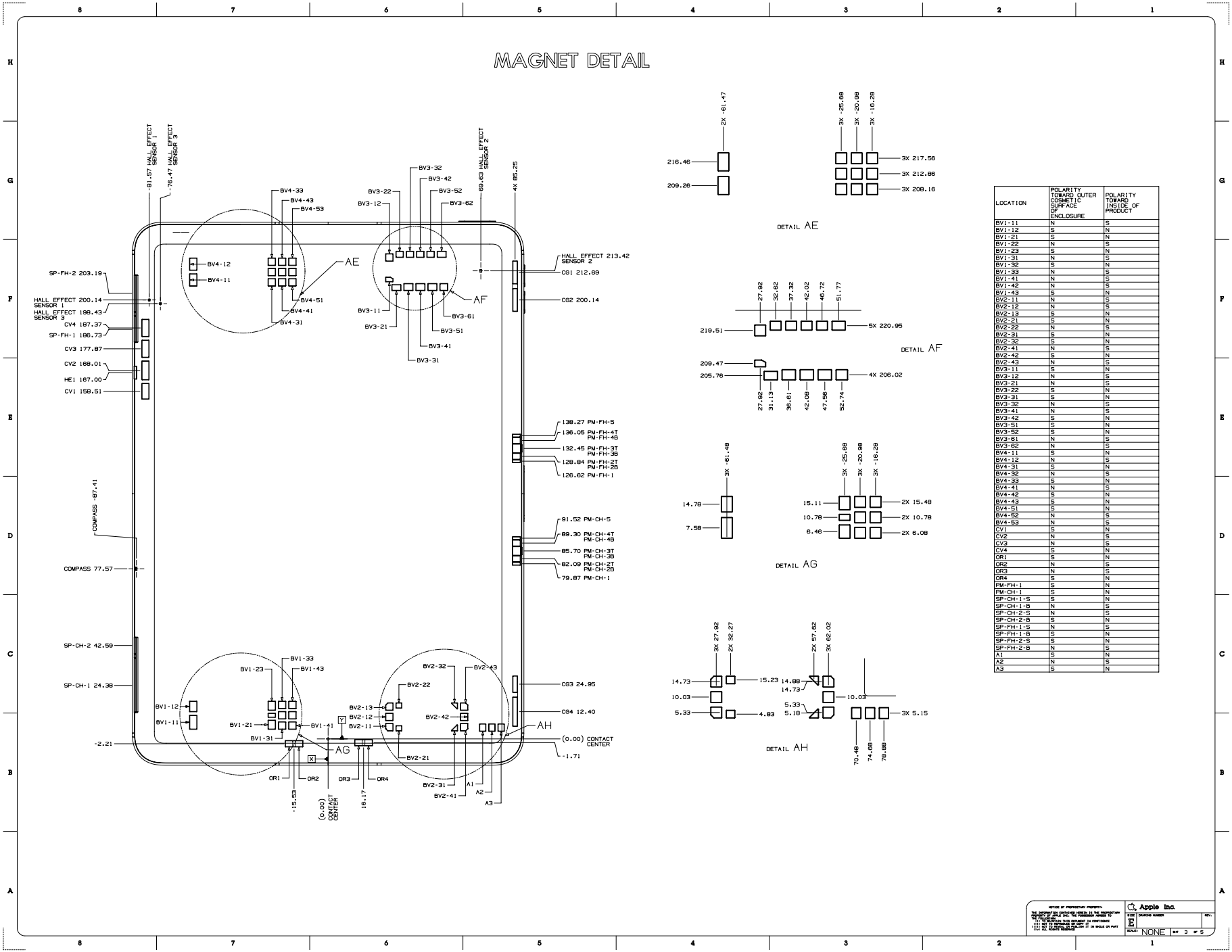

LOCATION	POLARITY TOWARD OUTER COSMETIC SURFACE OF ENCLOSURE	POLARITY TOWARD INSIDE OF PRODUCT
BV1-11	N	S
BV1-12	S	N
BV1-21	S	N
BV1-22	N	S
BV1-23	S	N
BV1-31	N	S
BV1-32	S	N
BV1-33	N	S
BV1-41	N	S
BV1-42	N	S
BV1-43	S	N
BV2-11	N	S
BV2-12	N	S
BV2-13	S	N
BV2-21	S	N
BV2-22	N	S
BV2-31	S	N
BV2-32	S	N
BV2-41	N	S
BV2-42	S	N
BV2-43	N	S
BV3-11	S	N
BV3-12	N	S
BV3-21	N	S
BV3-22	S	N
BV3-31	S	N
BV3-32	N	S
BV3-41	N	S
BV3-42	S	N
BV3-51	S	N
BV3-52	S	N
BV3-61	N	S
BV3-62	N	S
BV4-11	S	N
BV4-12	N	S
BV4-31	S	N
BV4-32	N	S
BV4-33	S	N
BV4-41	N	S
BV4-42	S	N
BV4-43	S	N
BV4-51	S	N
BV4-52	N	S
BV4-53	N	S
CV1	S	N
CV2	N	S
CV3	N	S
CV4	S	N
OR1	S	N
OR2	N	S
OR3	N	S
OR4	S	N
PM-FH-1	S	N
PM-CH-1	S	N
SP-CH-1-S	S	N
SP-CH-1-B	N	S
SP-CH-2-S	N	S
SP-CH-2-B	S	N
SP-FH-1-S	N	S
SP-FH-1-B	S	N
SP-FH-2-S	S	N
SP-FH-2-B	N	S
A1	S	N
A2	N	S
A3	S	N

Copyright © 2023 Apple Inc. All Rights Reserved.

56.79 iPad Air (5th generation) and iPad Air (4th generation) 4 of 5

[中文]

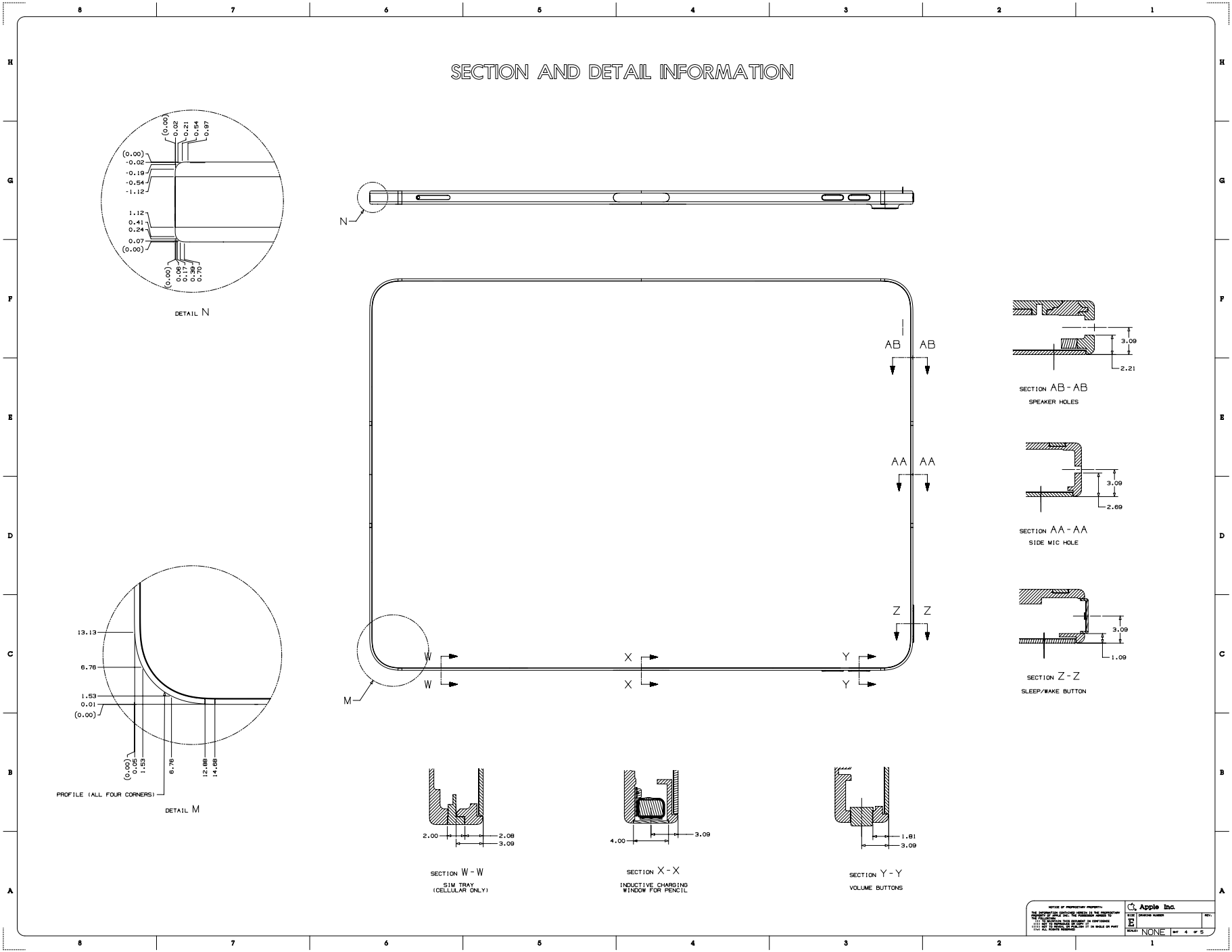

Copyright © 2023 Apple Inc. All Rights Reserved.

56.80 iPad Air (5th generation) and iPad Air (4th generation) 5 of 5

[中文]

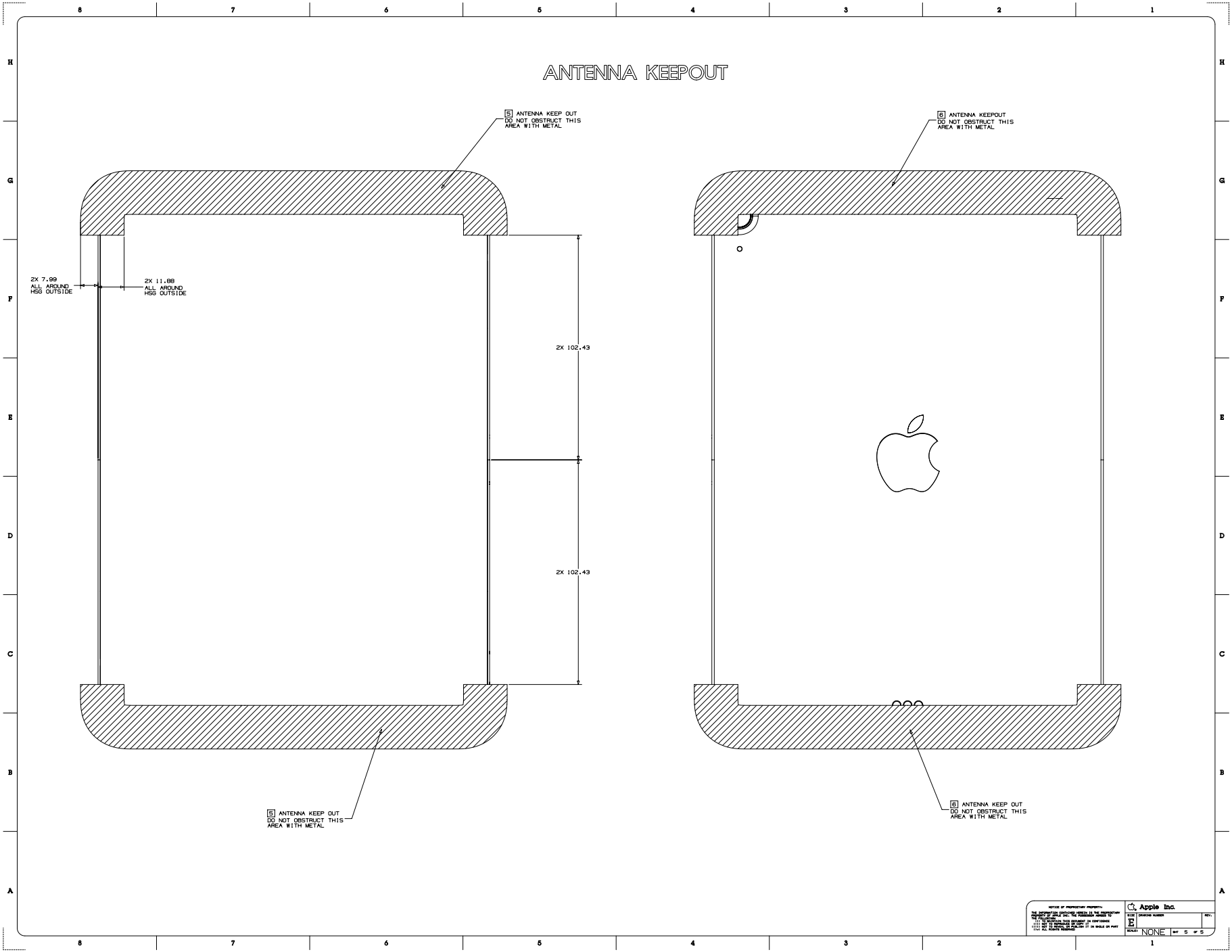

Copyright © 2023 Apple Inc. All Rights Reserved.

56.81 iPad mini (6th generation) 1 of 6

[中文]

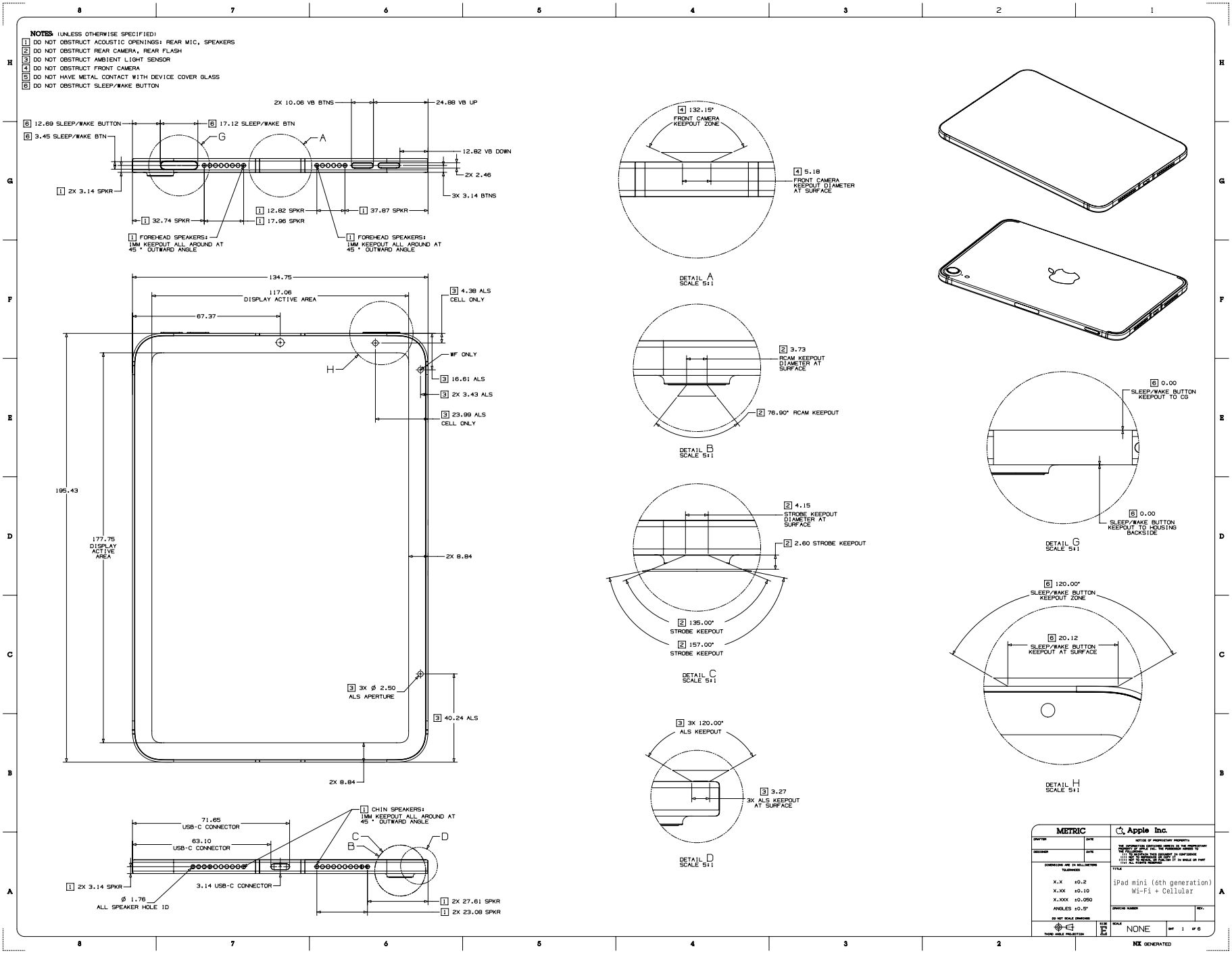

Copyright © 2023 Apple Inc. All Rights Reserved.

56.82 iPad mini (6th generation) 2 of 6

[中文]

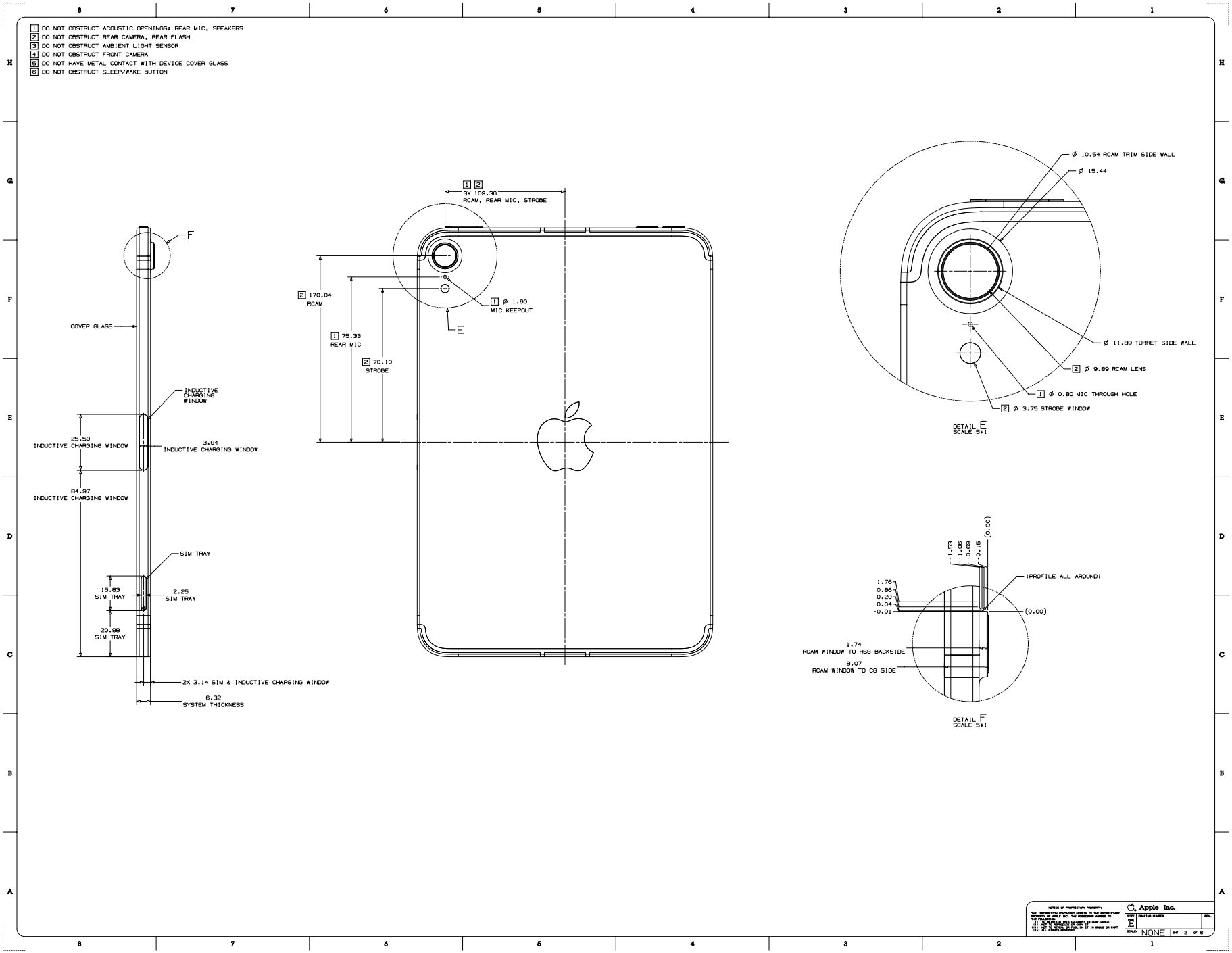

 Copyright © 2023 Apple Inc. All Rights Reserved.

56.83 iPad mini (6th generation) 3 of 6

[中文]

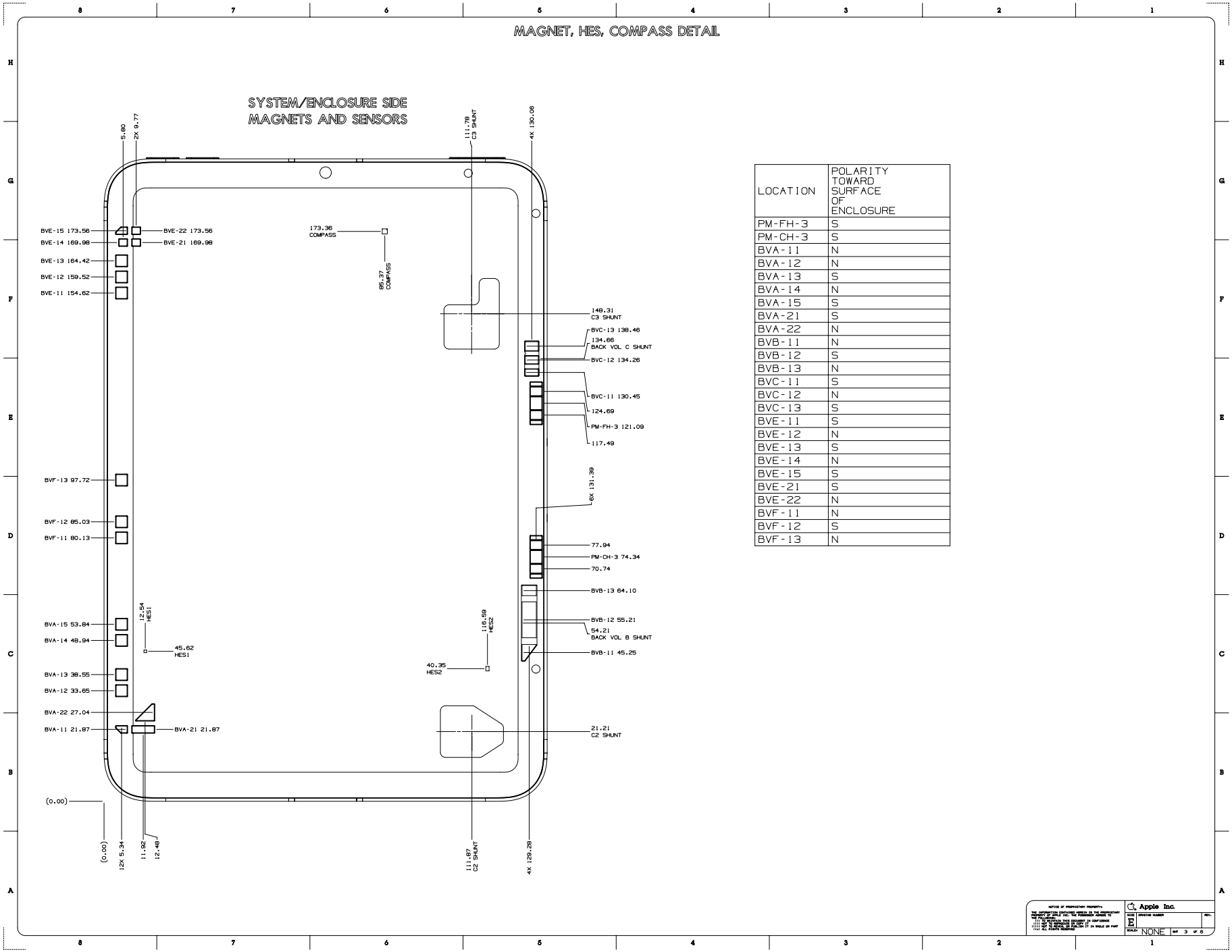

LOCATION	POLARITY TOWARD SURFACE OF ENCLOSURE
PM-FH-3	S
PM-CH-3	S
BVA-11	N
BVA-12	N
BVA-13	S
BVA-14	N
BVA-15	S
BVA-21	S
BVA-22	N
BVB-11	N
BVB-12	S
BVB-13	N
BVC-11	S
BVC-12	N
BVC-13	S
BVE-11	S
BVE-12	N
BVE-13	S
BVE-14	N
BVE-15	S
BVE-21	S
BVE-22	N
BVF-11	N
BVF-12	S
BVF-13	N

Copyright © 2023 Apple Inc. All Rights Reserved.

56.84 iPad mini (6th generation) 4 of 6

[中文]

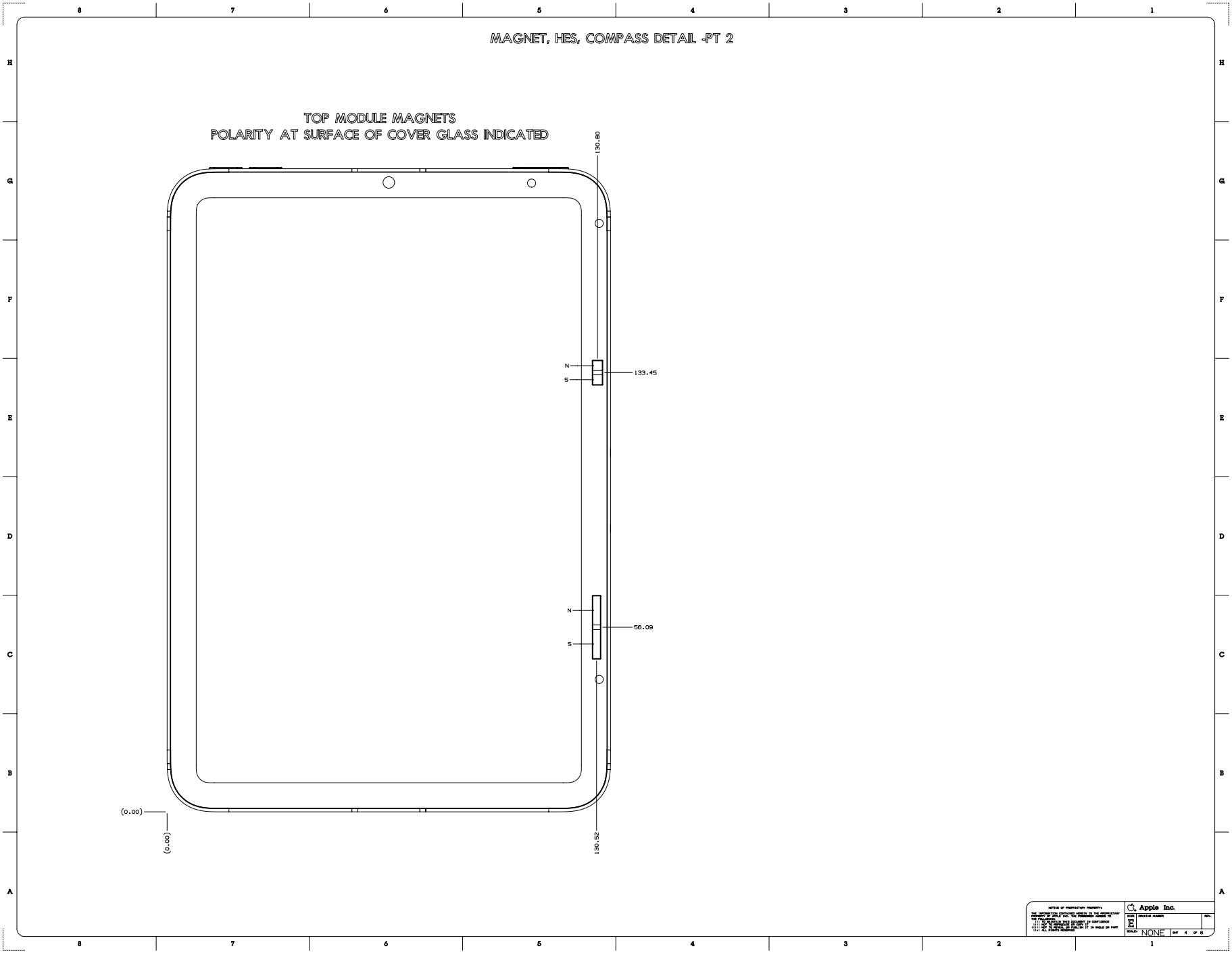

Copyright © 2023 Apple Inc. All Rights Reserved.

56.85 iPad mini (6th generation) 5 of 6

[中文]

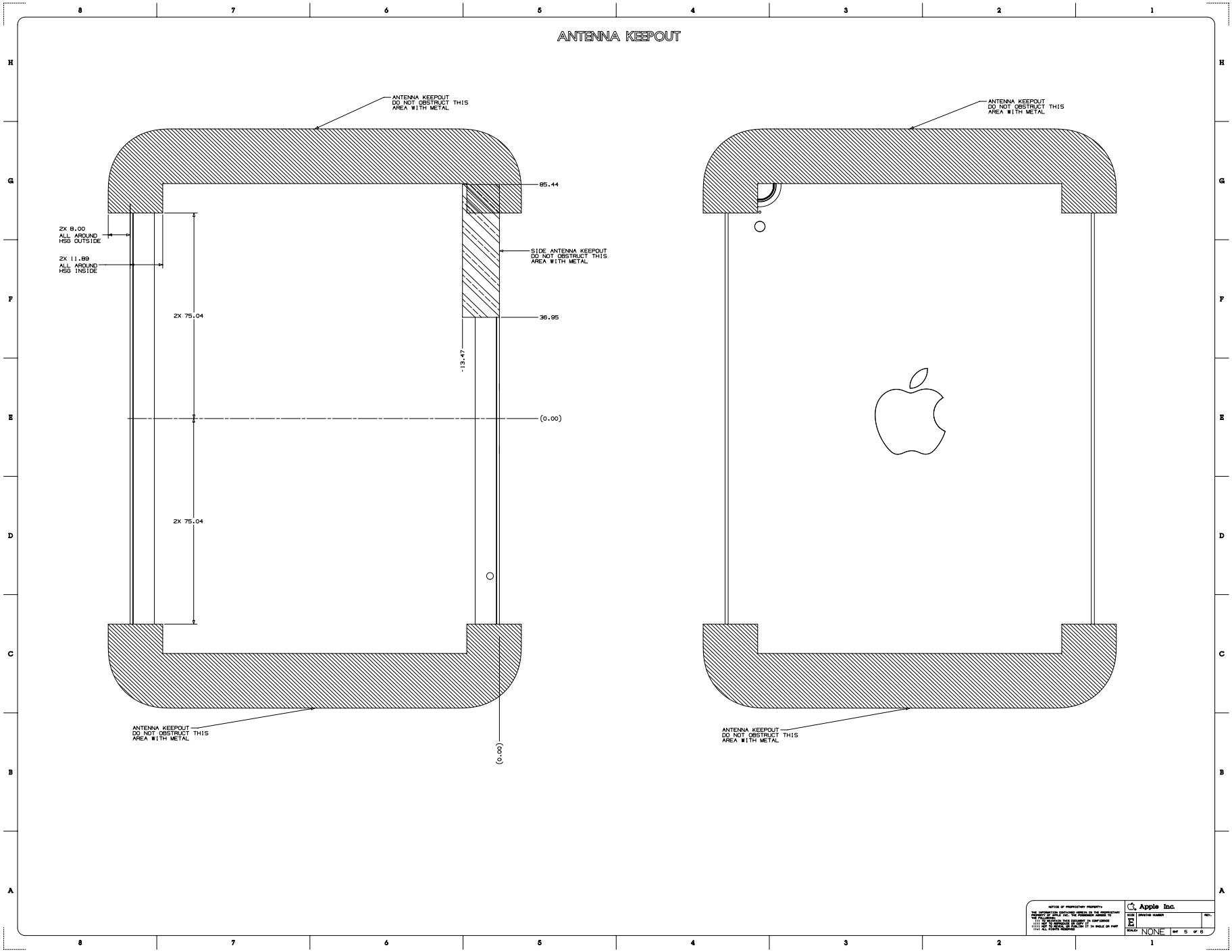

Copyright © 2023 Apple Inc. All Rights Reserved.

56.86 iPad mini (6th generation) 6 of 6

[中文]

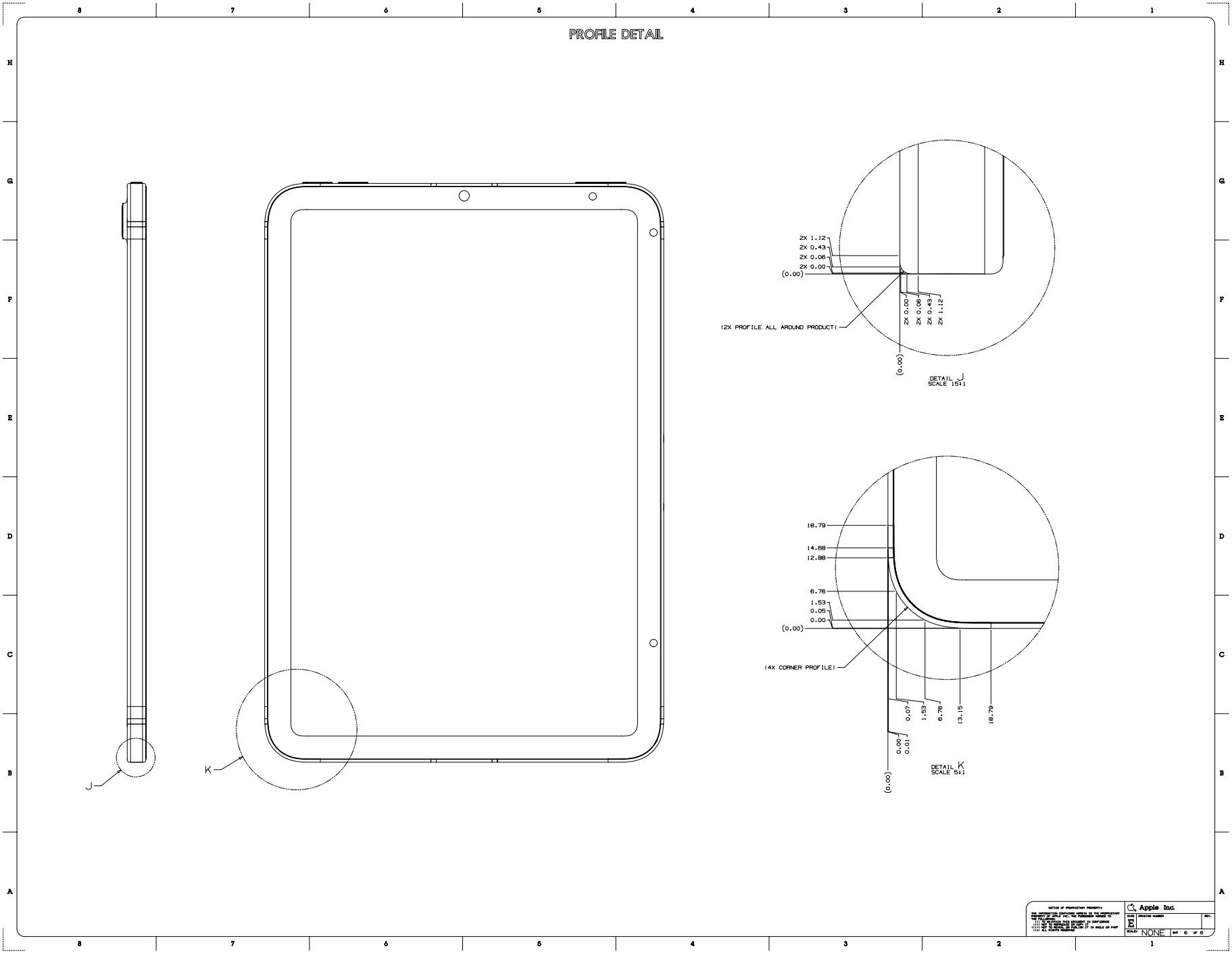

Copyright © 2023 Apple Inc. All Rights Reserved.

56.87 iPad (9th generation), iPad (8th generation) and iPad (7th generation) 1 of 4 [中文]

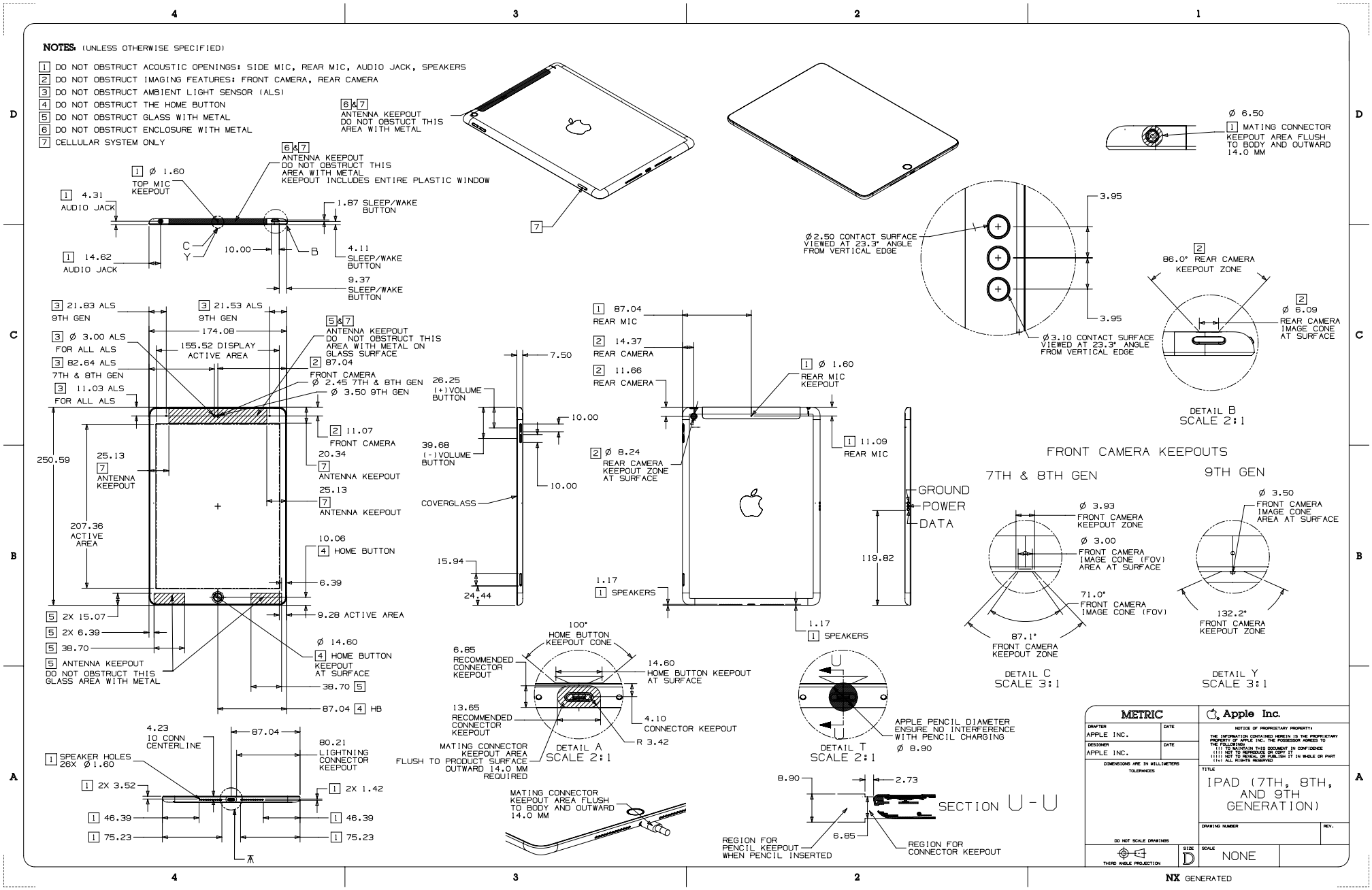

Copyright © 2023 Apple Inc. All Rights Reserved.

56.88 iPad (9th generation), iPad (8th generation) and iPad (7th generation) 2 of 4 [中文]

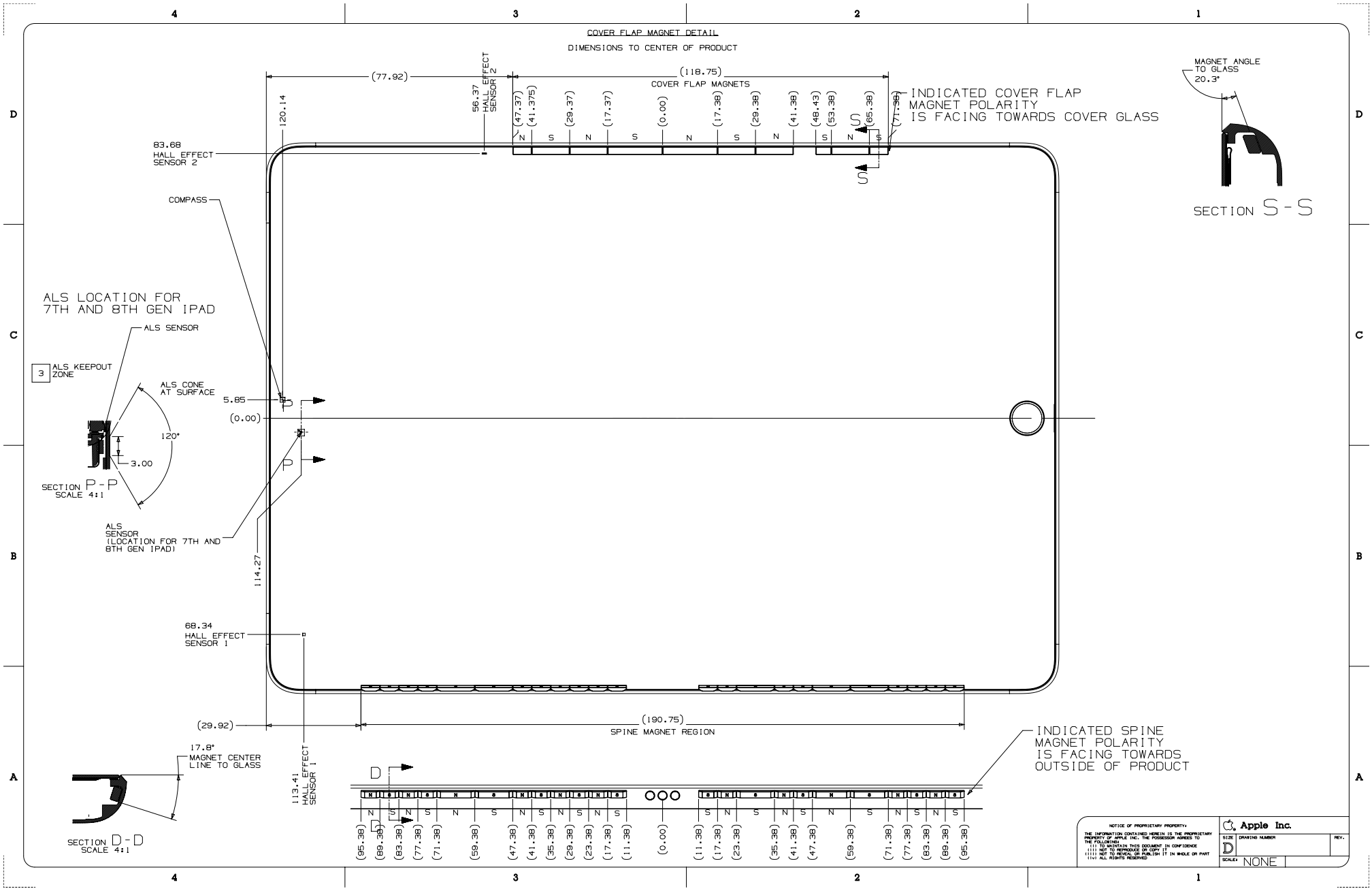

56.89 iPad (9th generation), iPad (8th generation) and iPad (7th generation) 3 of 4 [中文]

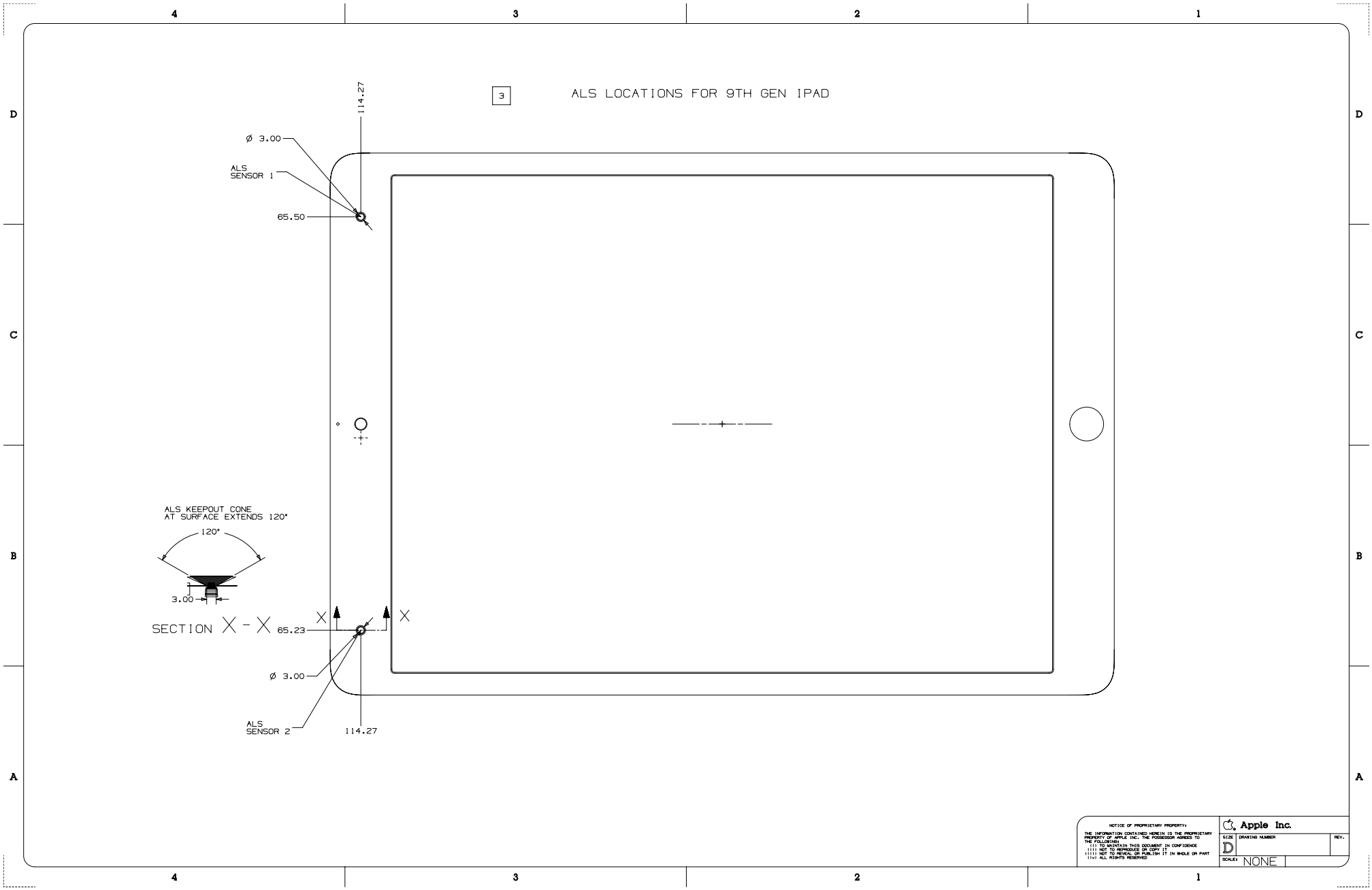

Copyright © 2023 Apple Inc. All Rights Reserved.

56.90 iPad (9th generation), iPad (8th generation) and iPad (7th generation) 4 of 4 [中文]

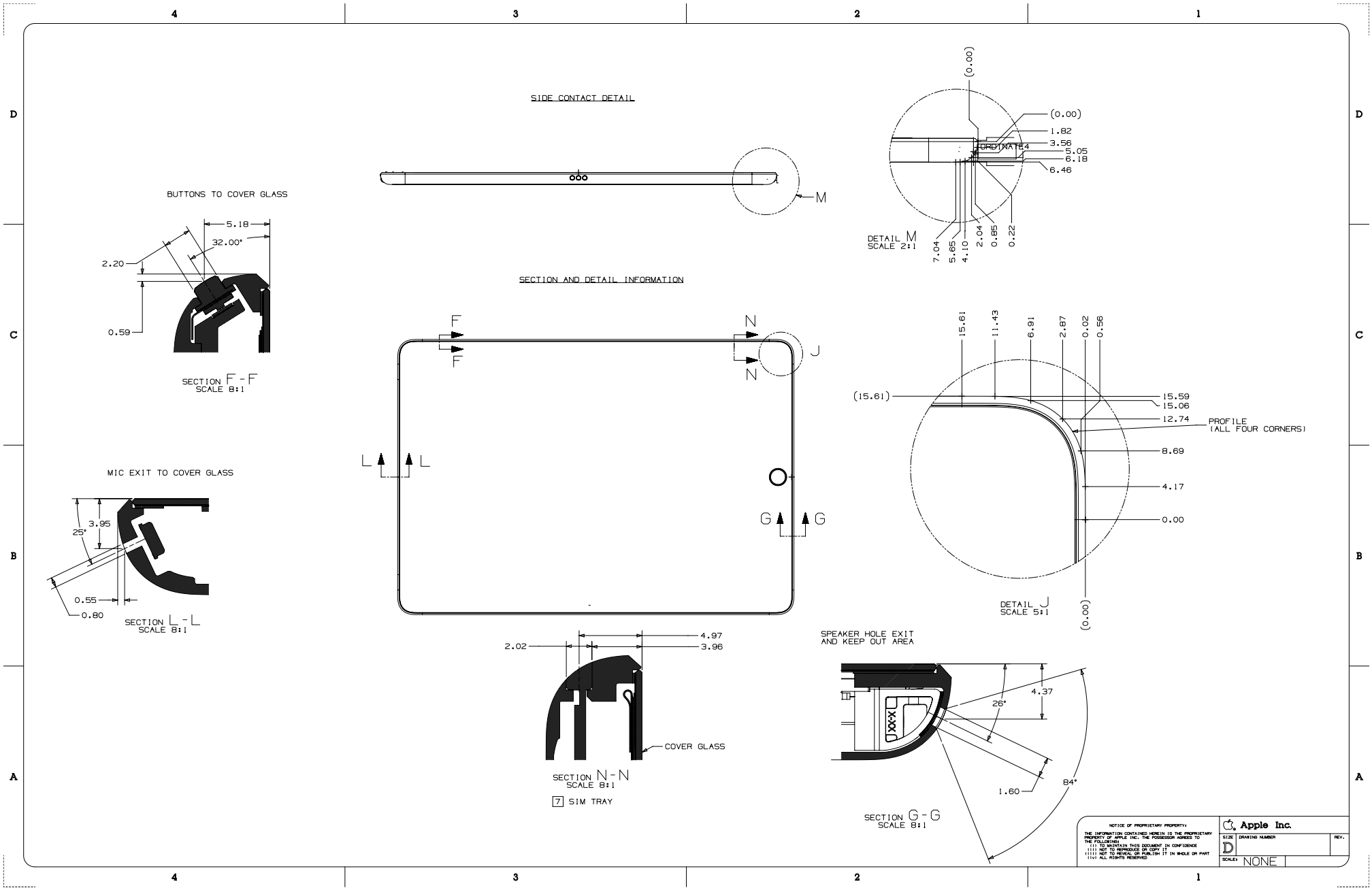

56.91 iPad Pro 12.9-inch (5th generation) 1 of 5

[中文]

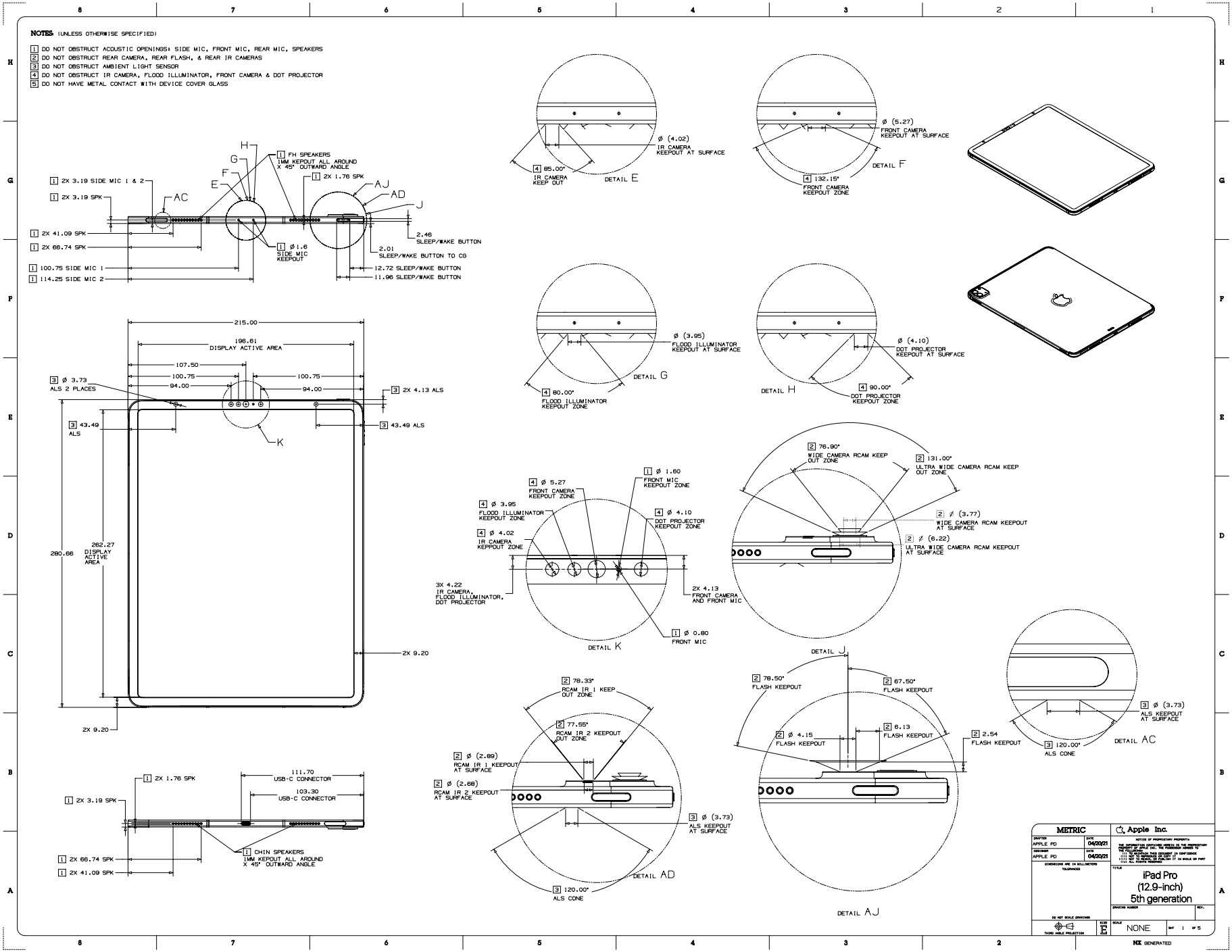

Copyright © 2023 Apple Inc. All Rights Reserved.

56.92 iPad Pro 12.9-inch (5th generation) 2 of 5

[中文]

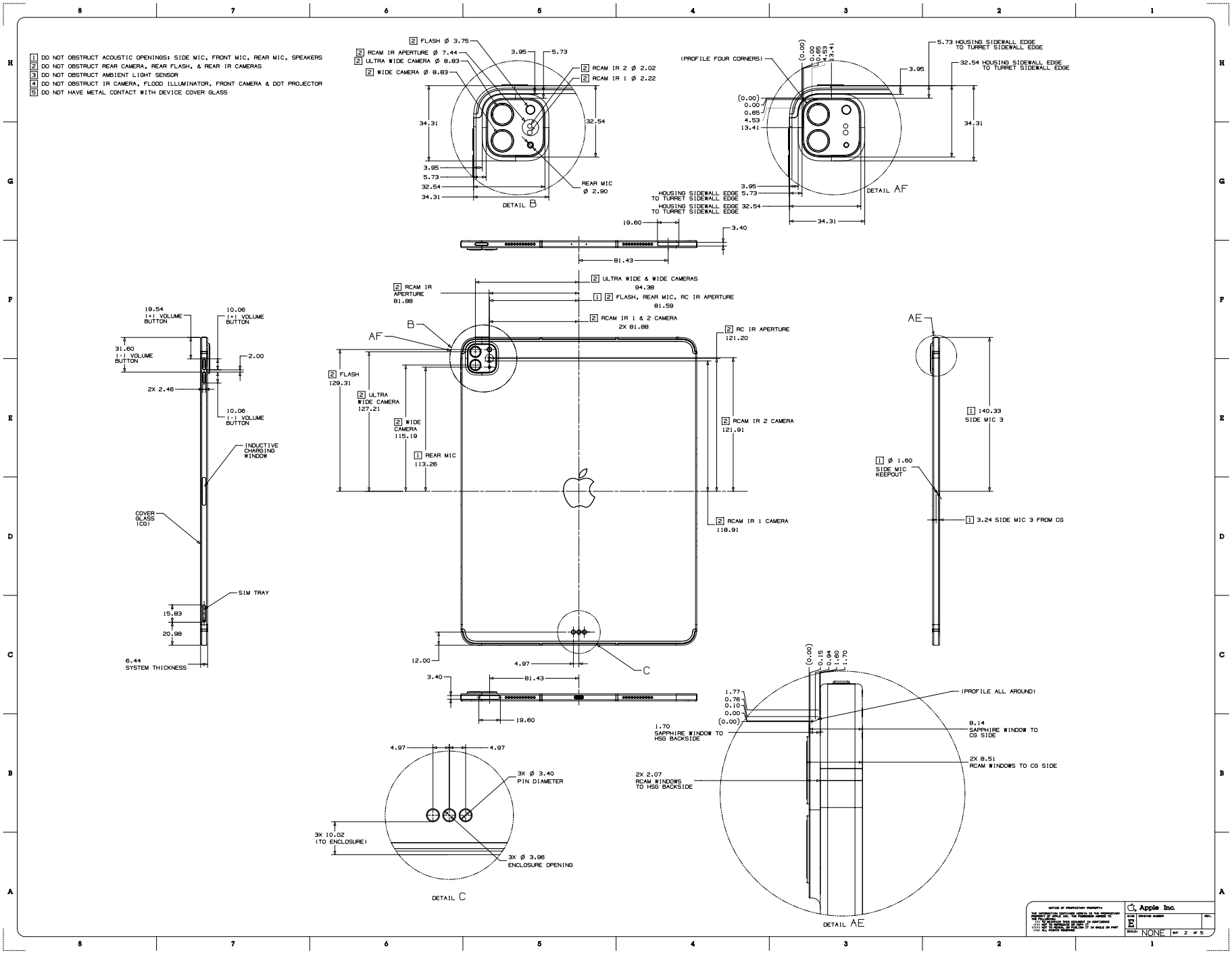

Copyright © 2023 Apple Inc. All Rights Reserved.

56.93 iPad Pro 12.9-inch (5th generation) 3 of 5

[中文]

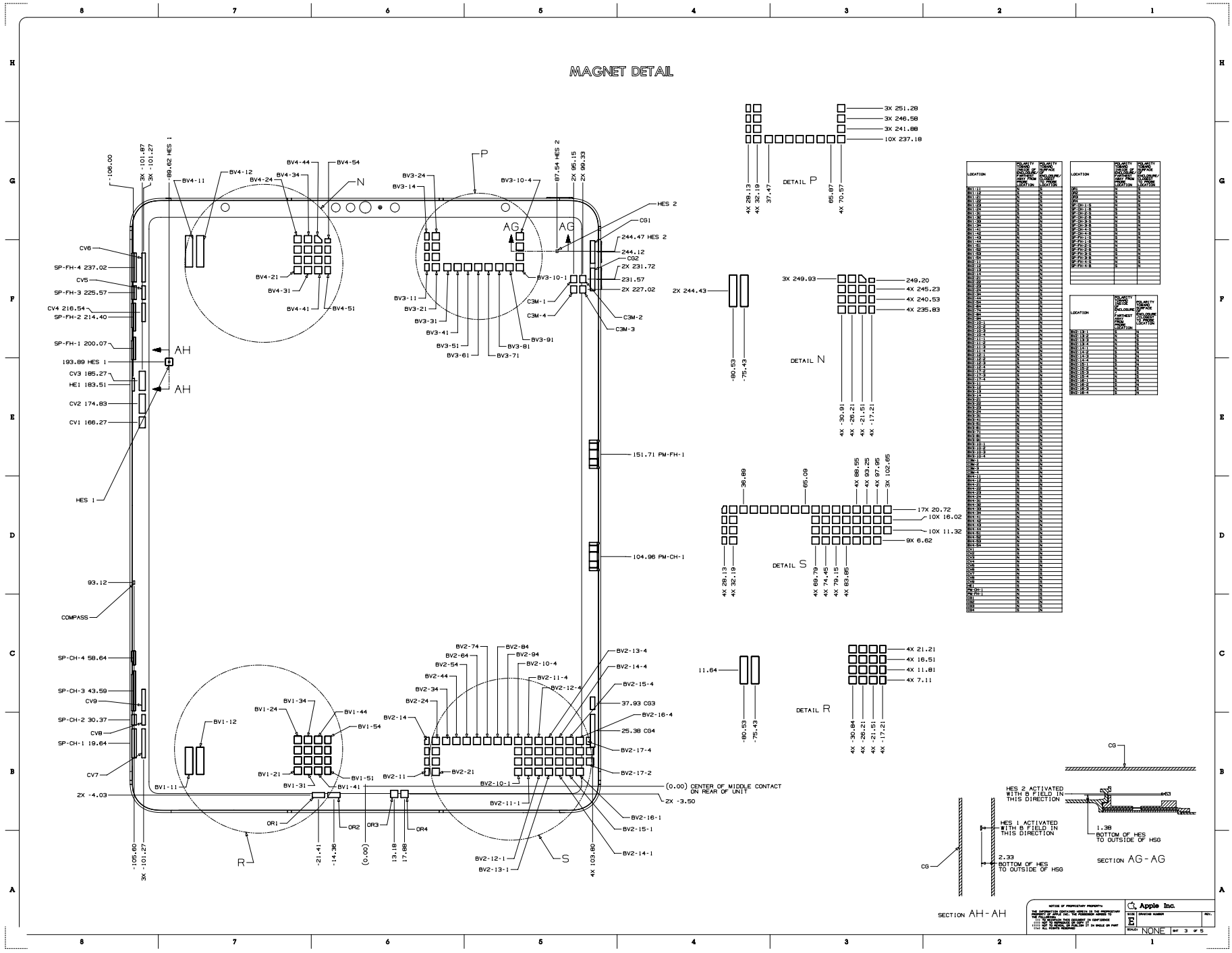

Copyright © 2023 Apple Inc. All Rights Reserved.

56.94 iPad Pro 12.9-inch (5th generation) 4 of 5

[中文]

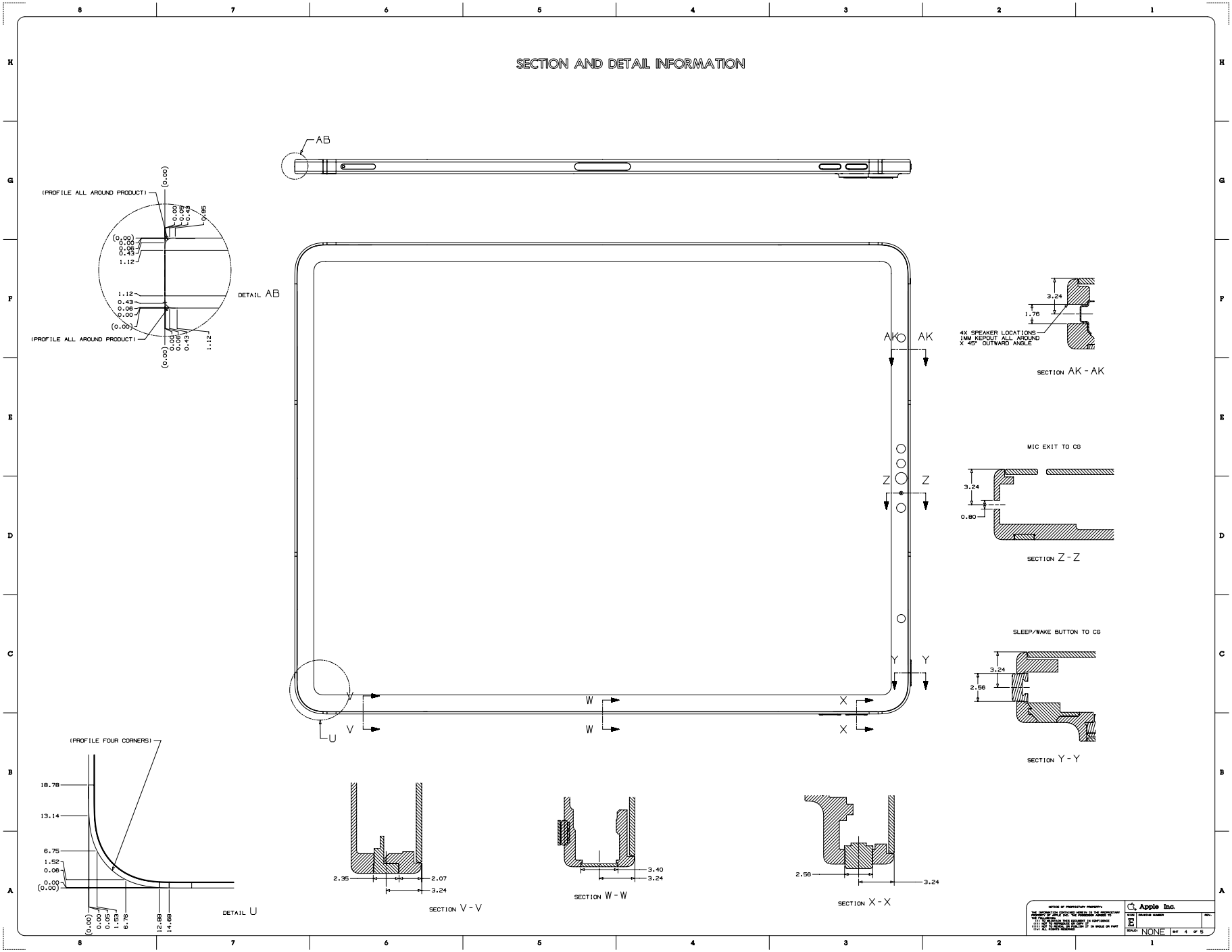

Copyright © 2023 Apple Inc. All Rights Reserved.

56.95 iPad Pro 12.9-inch (5th generation) 5 of 5

[中文]

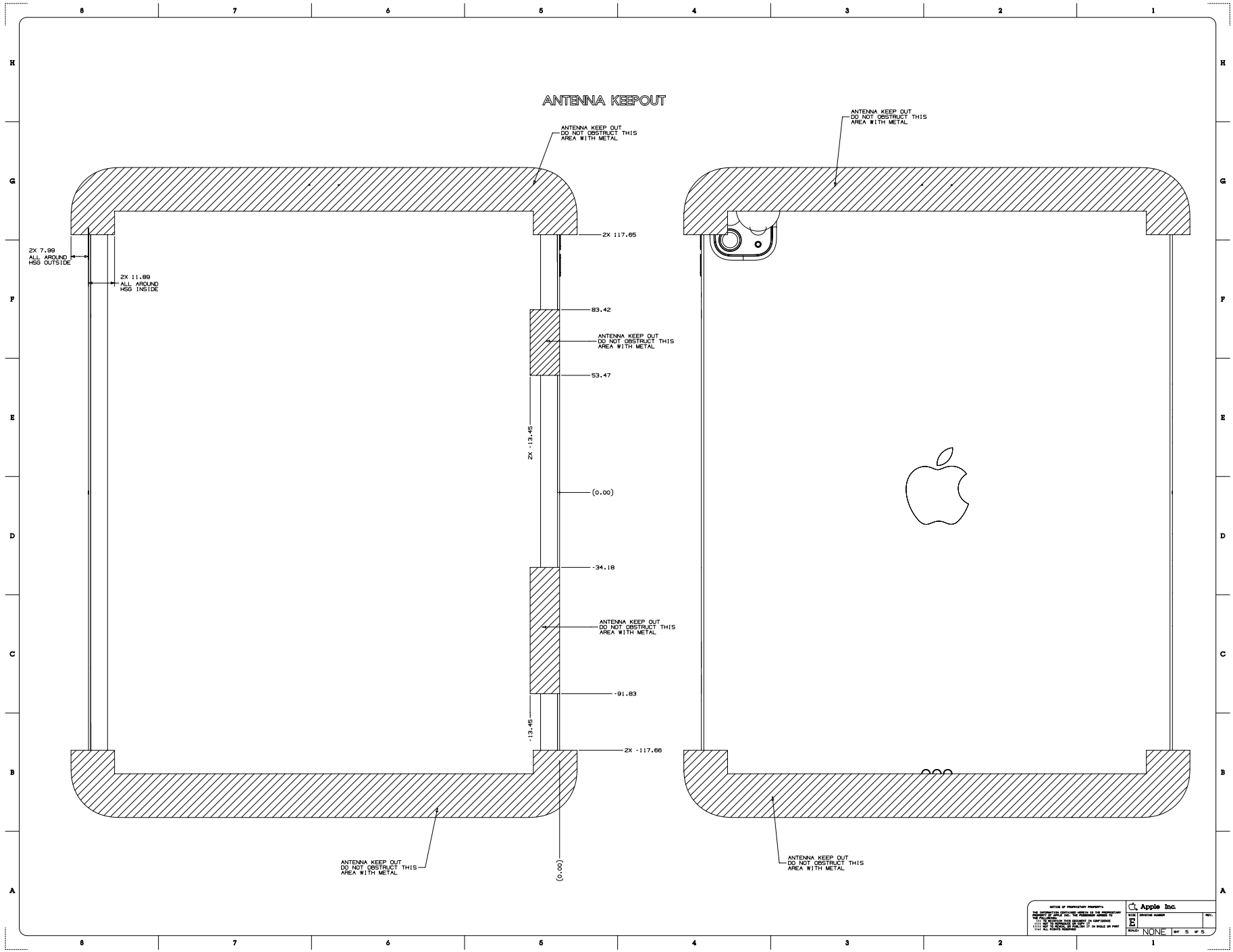

Copyright © 2023 Apple Inc. All Rights Reserved.

56.96 iPad Pro 11-inch (3rd generation) 1 of 5

[中文]

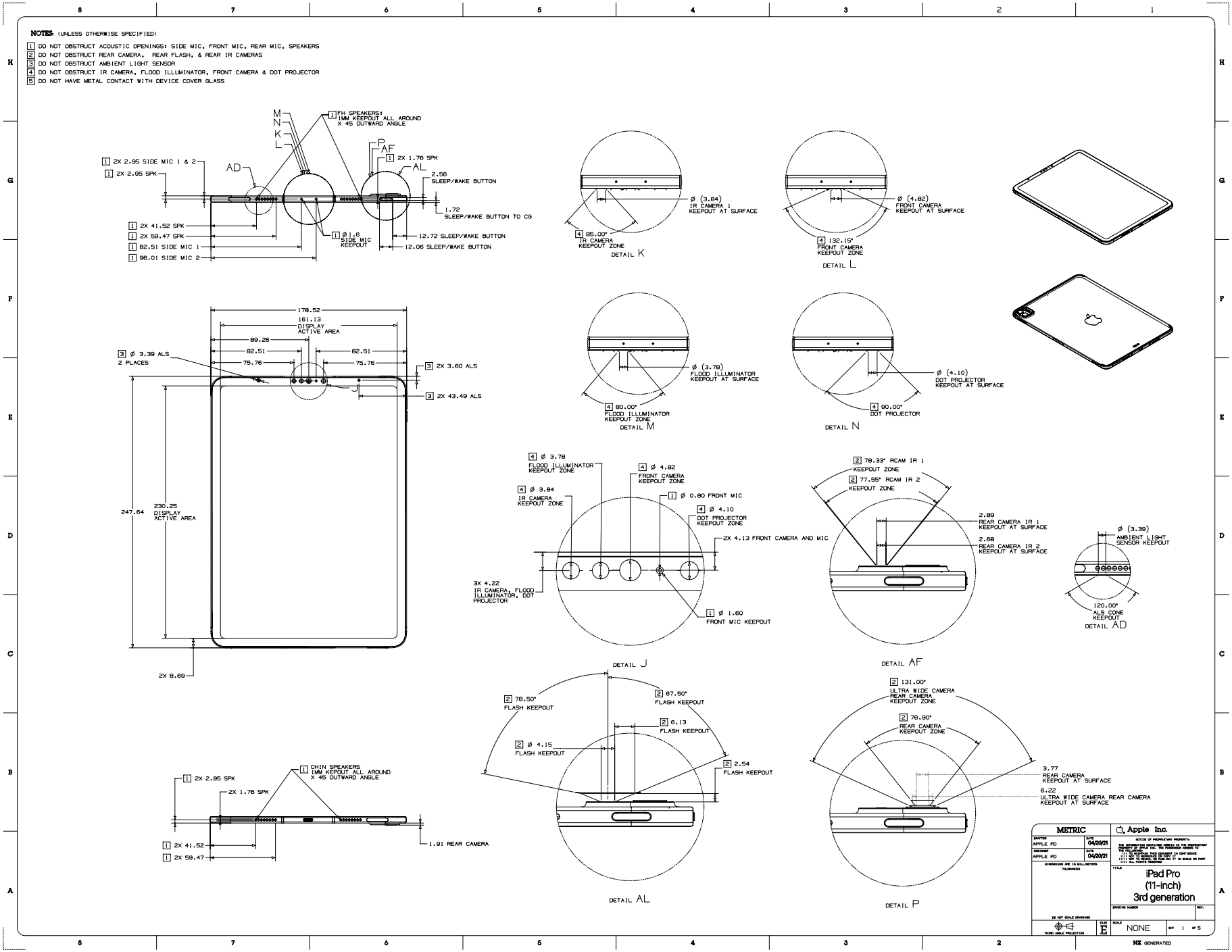

Copyright © 2023 Apple Inc. All Rights Reserved.

56.97 iPad Pro 11-inch (3rd generation) 2 of 5

[中文]

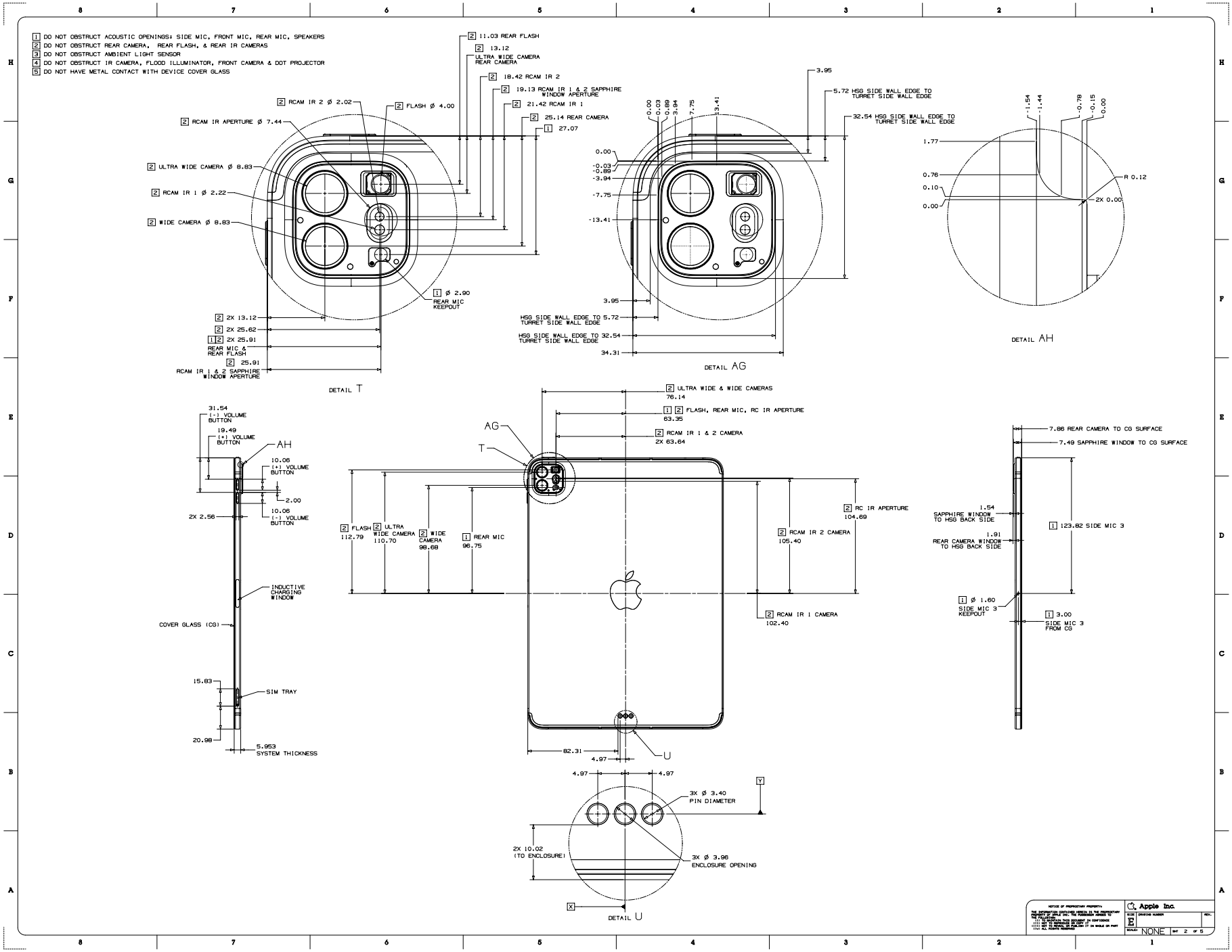

Copyright © 2023 Apple Inc. All Rights Reserved.

56.98 iPad Pro 11-inch (3rd generation) 3 of 5

[中文]

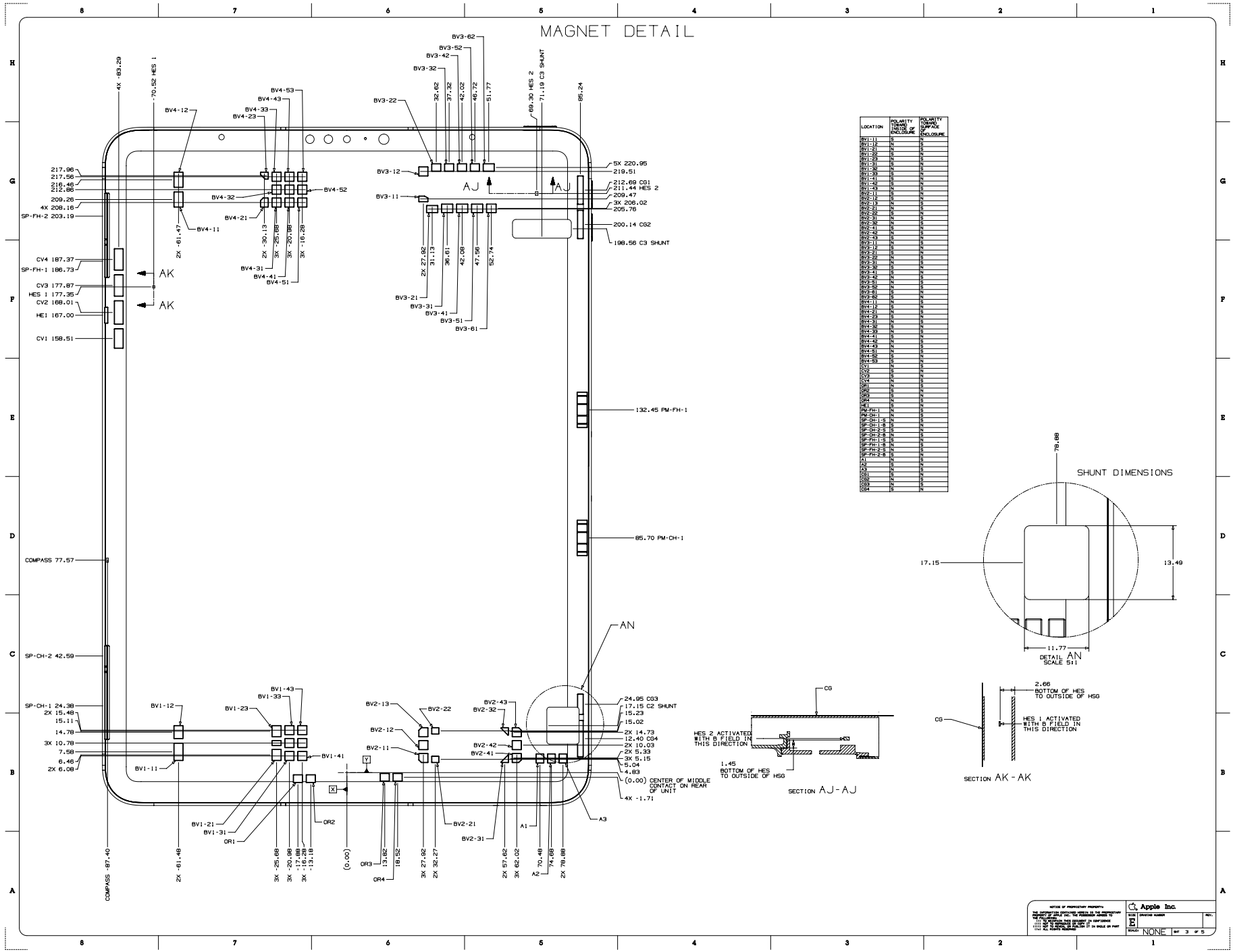

 Copyright © 2023 Apple Inc. All Rights Reserved.

56.99 iPad Pro 11-inch (3rd generation) 4 of 5

[中文]

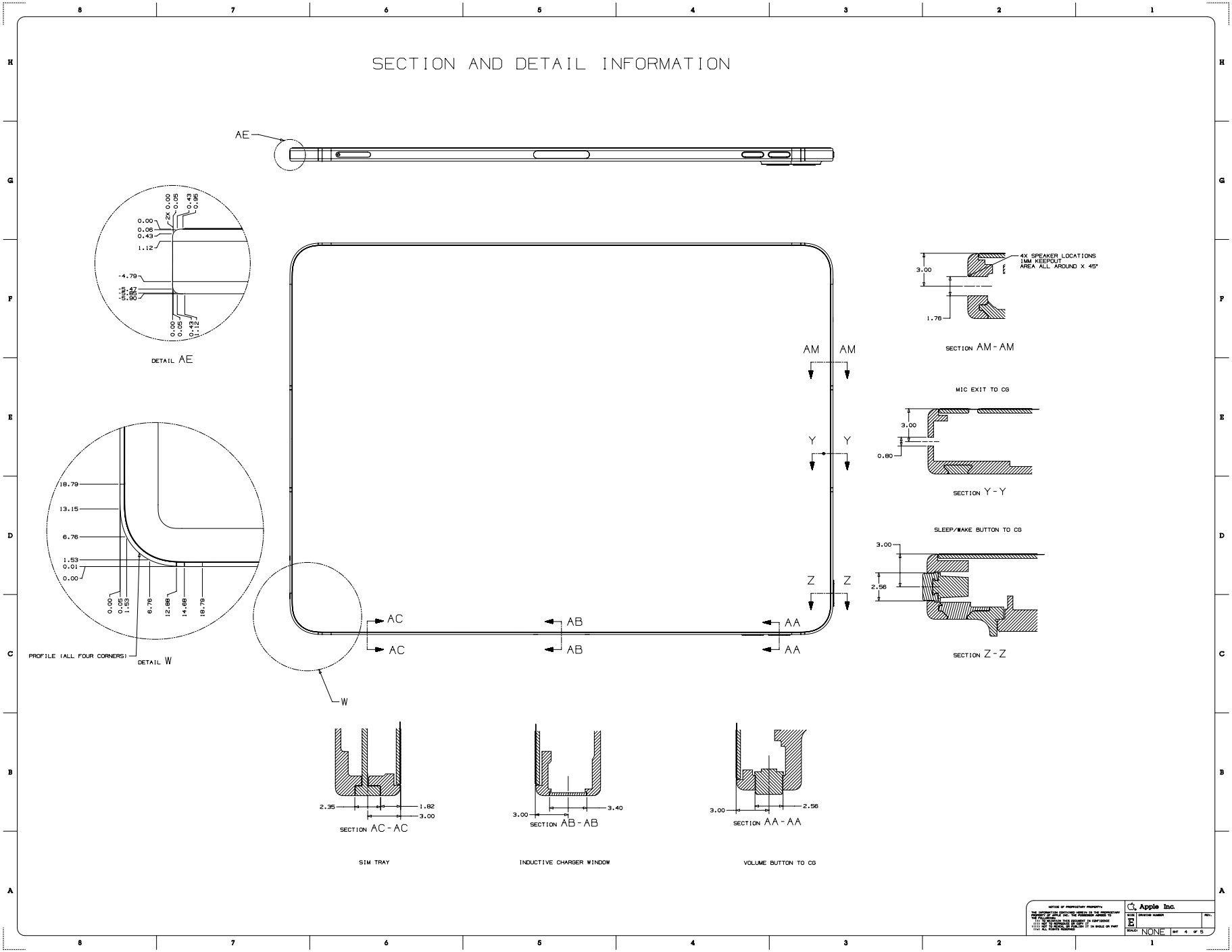

 Copyright © 2023 Apple Inc. All Rights Reserved.

56.100 iPad Pro 11-inch (3rd generation) 5 of 5

[中文]

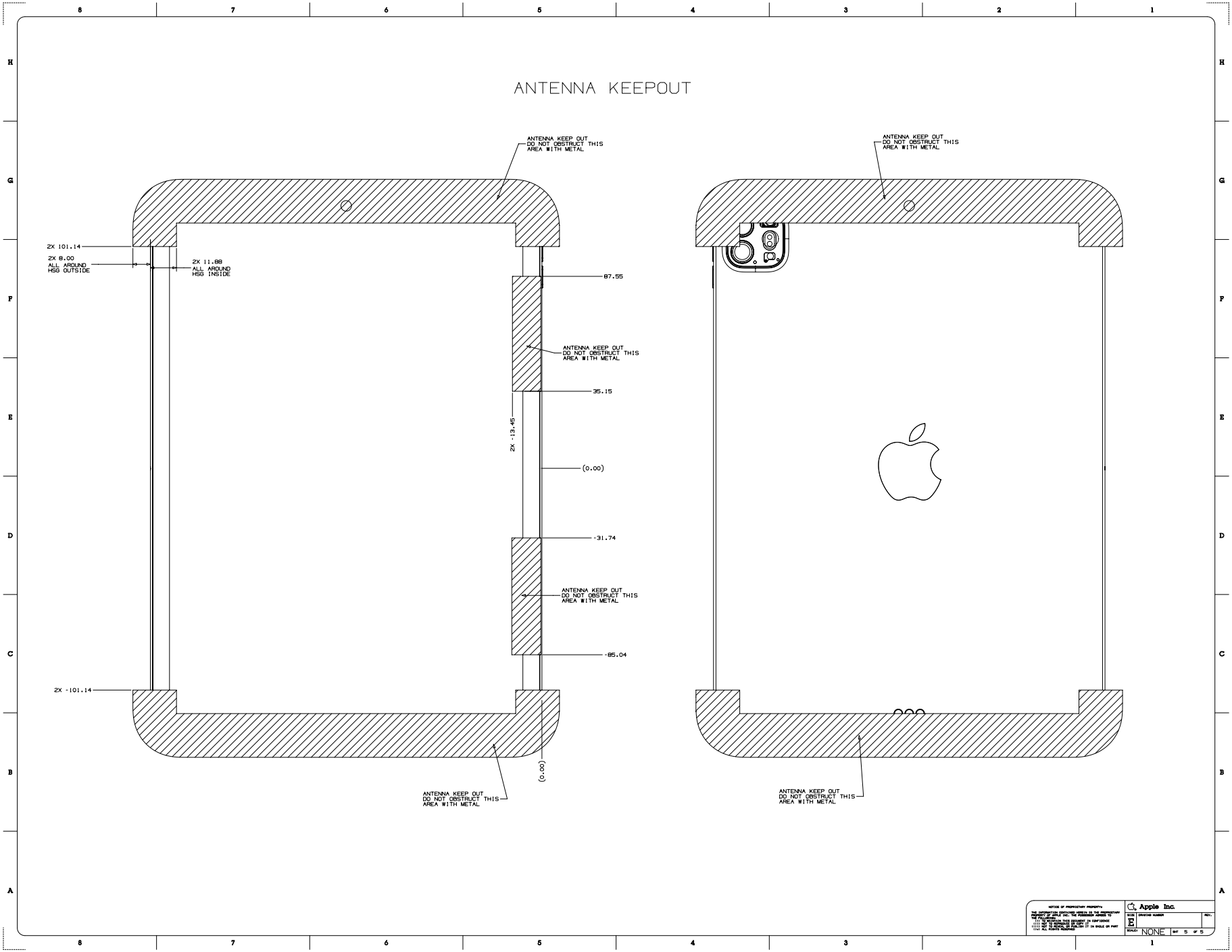

Copyright © 2023 Apple Inc. All Rights Reserved.

56.101 iPad Pro 12.9-inch (4th generation) 1 of 5

[中文]

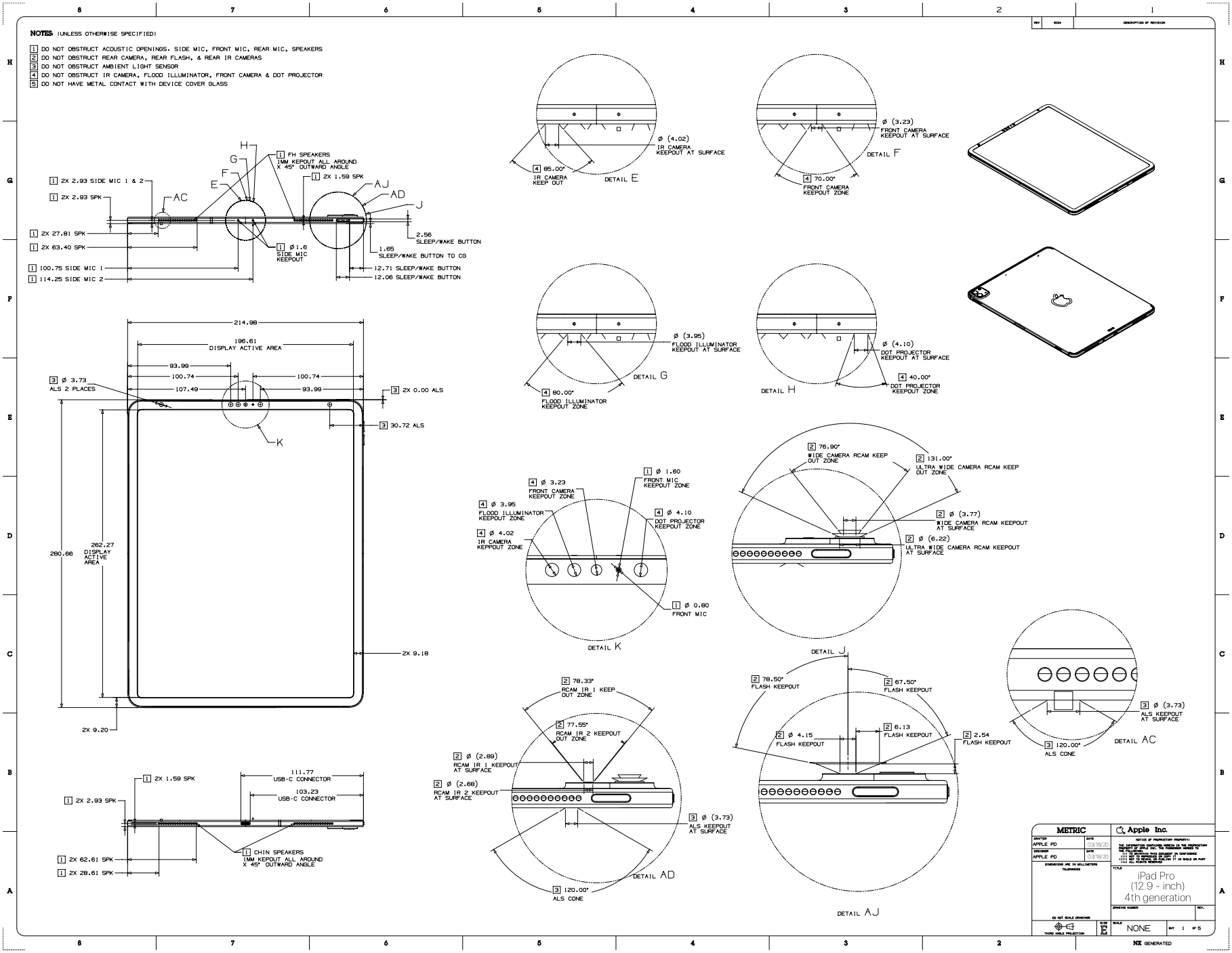

Copyright © 2023 Apple Inc. All Rights Reserved.

56.102 iPad Pro 12.9-inch (4th generation) 2 of 5

[中文]

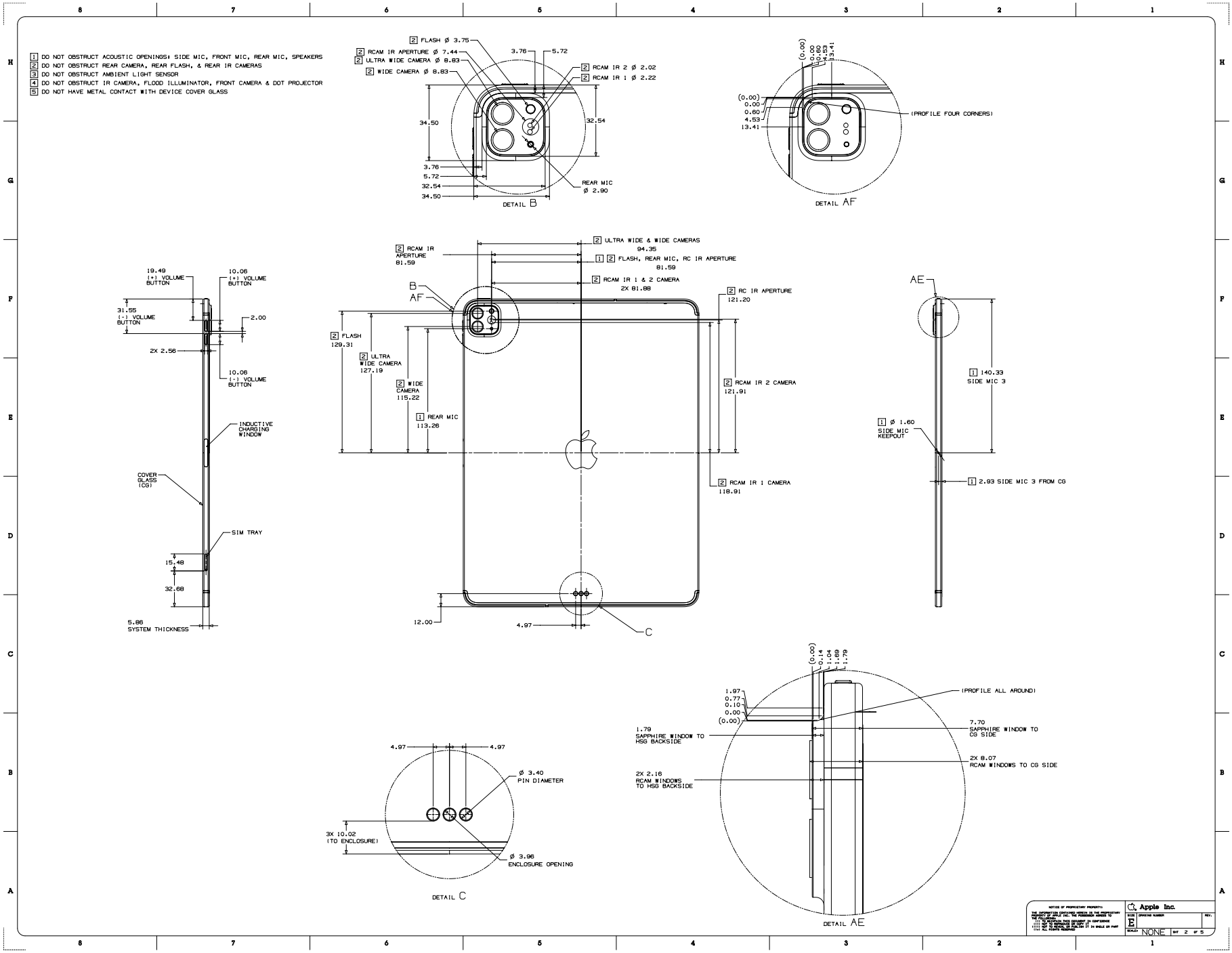

Copyright © 2023 Apple Inc. All Rights Reserved.

56.103 iPad Pro 12.9-inch (4th generation) 3 of 5

[中文]

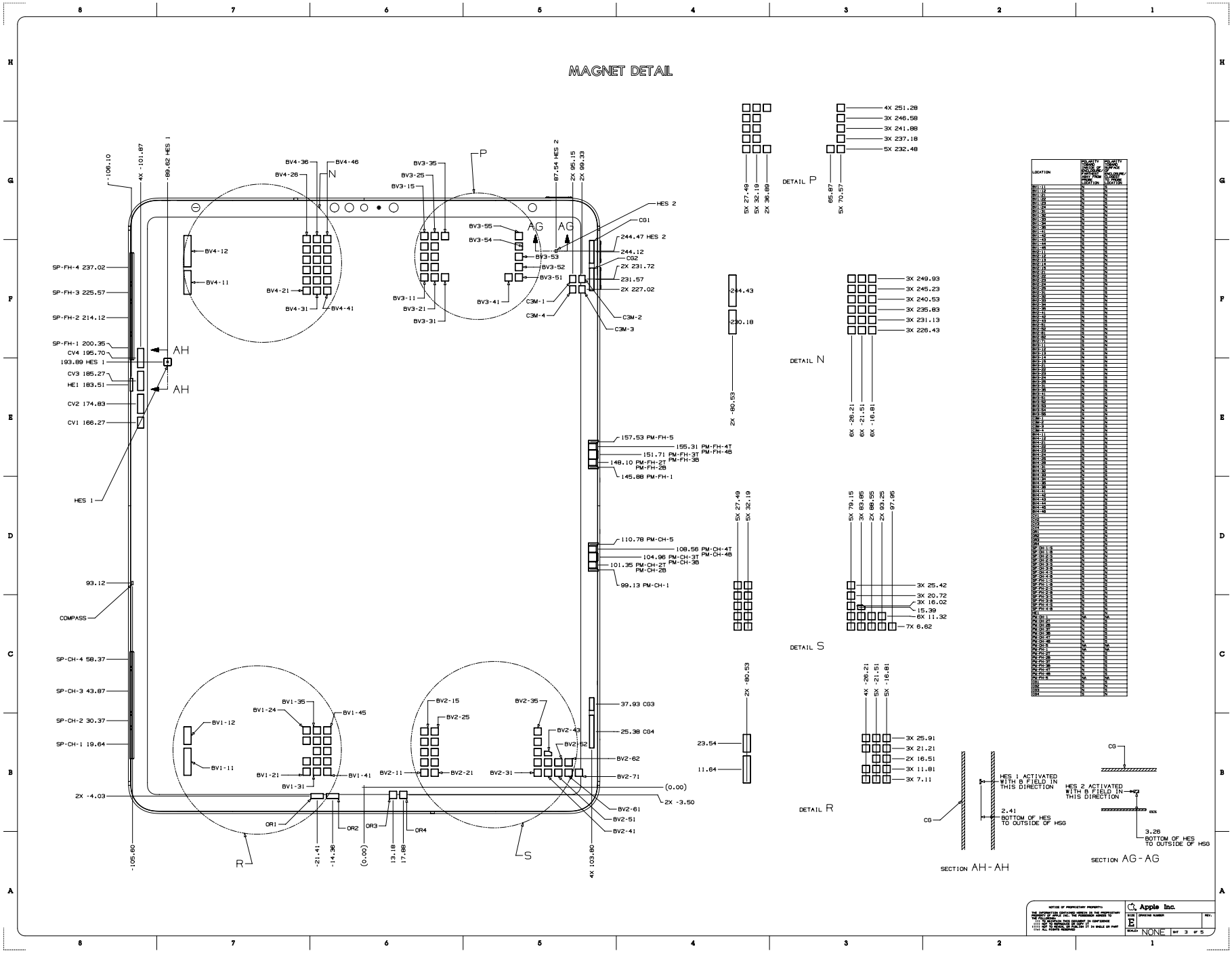

 Copyright © 2023 Apple Inc. All Rights Reserved.

56.104 iPad Pro 12.9-inch (4th generation) 4 of 5

[中文]

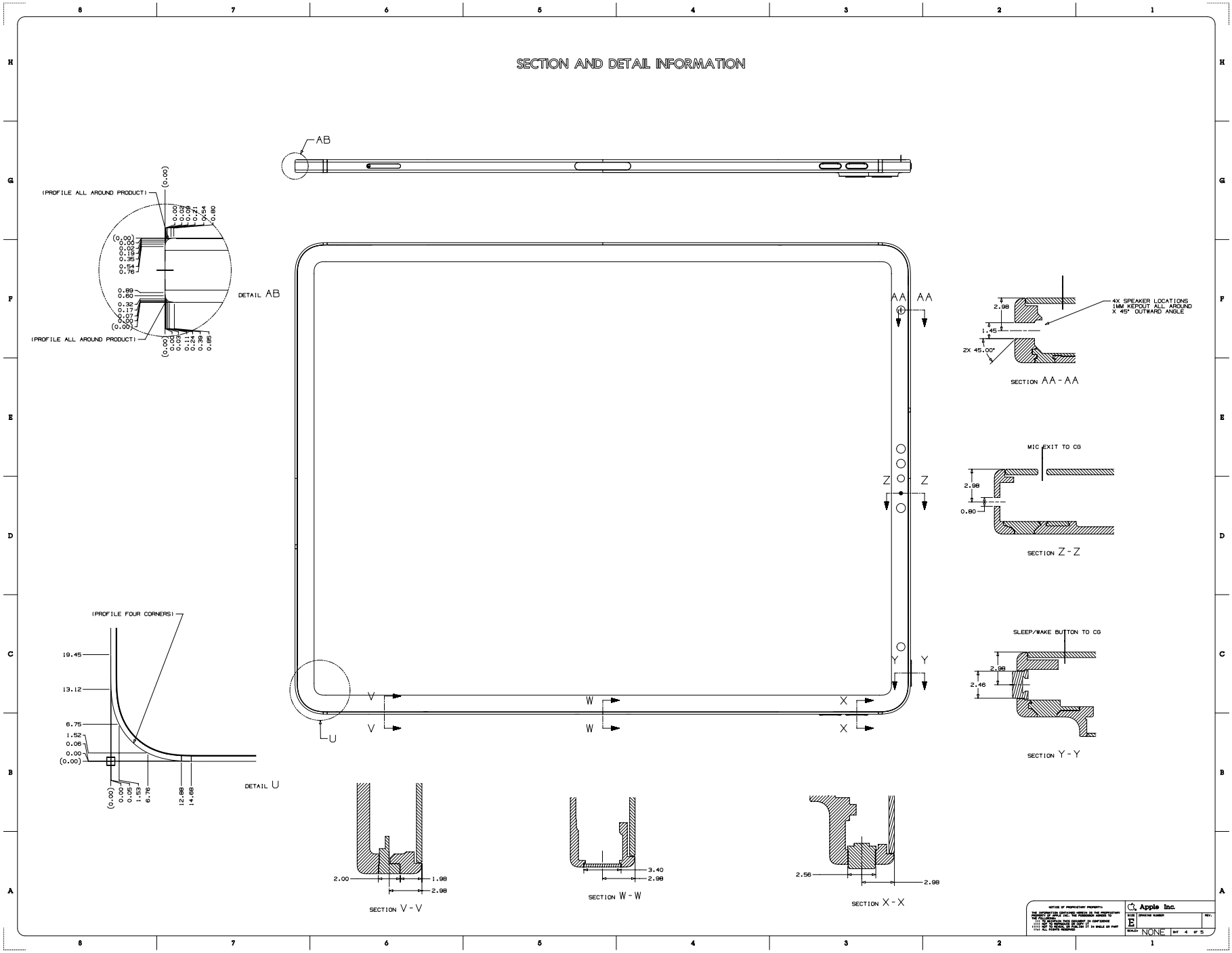

Copyright © 2023 Apple Inc. All Rights Reserved.

56.105 iPad Pro 12.9-inch (4th generation) 5 of 5

[中文]

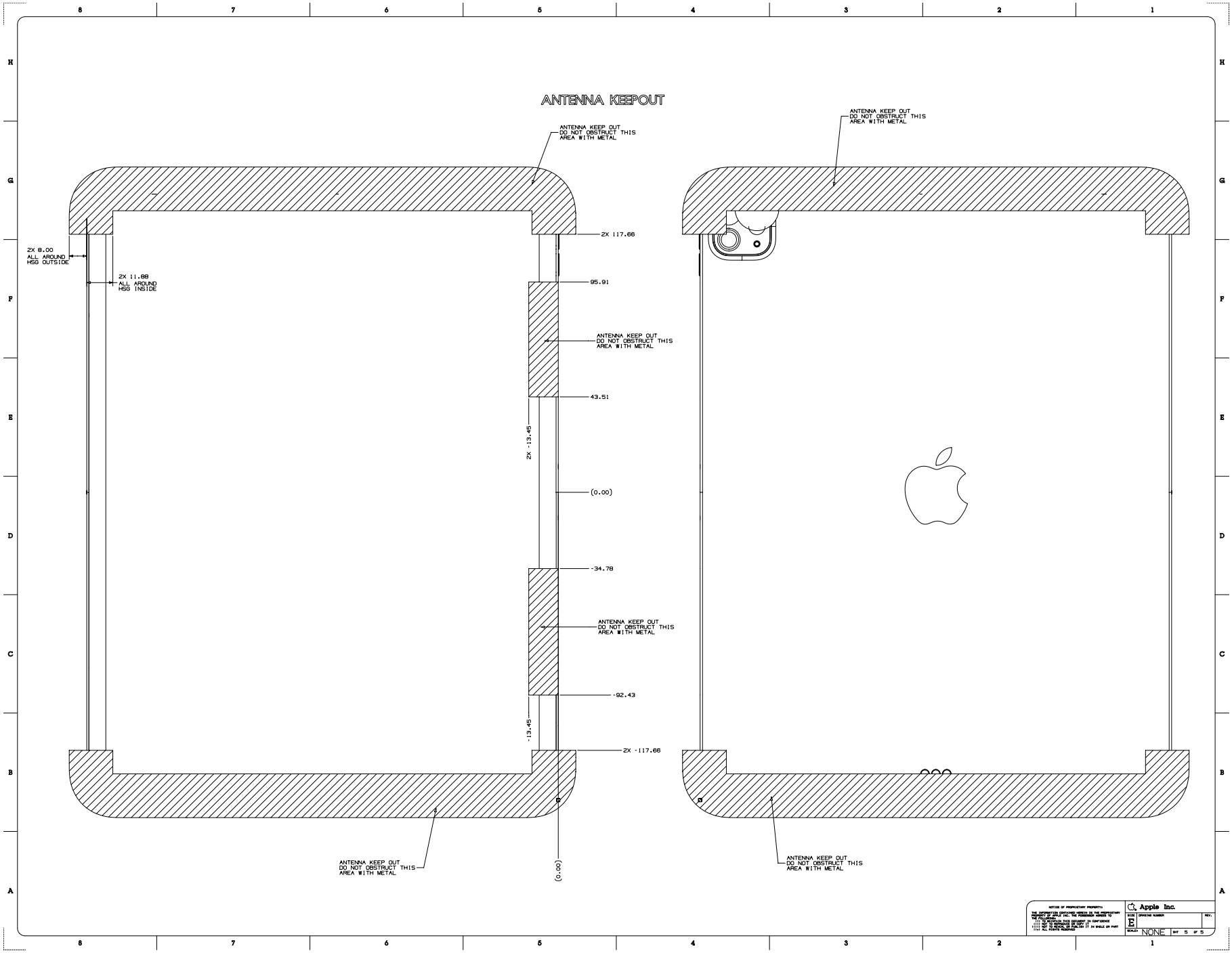

 Copyright © 2023 Apple Inc. All Rights Reserved.

56.106 iPad Pro 11-inch (2nd generation) 1 of 5

[中文]

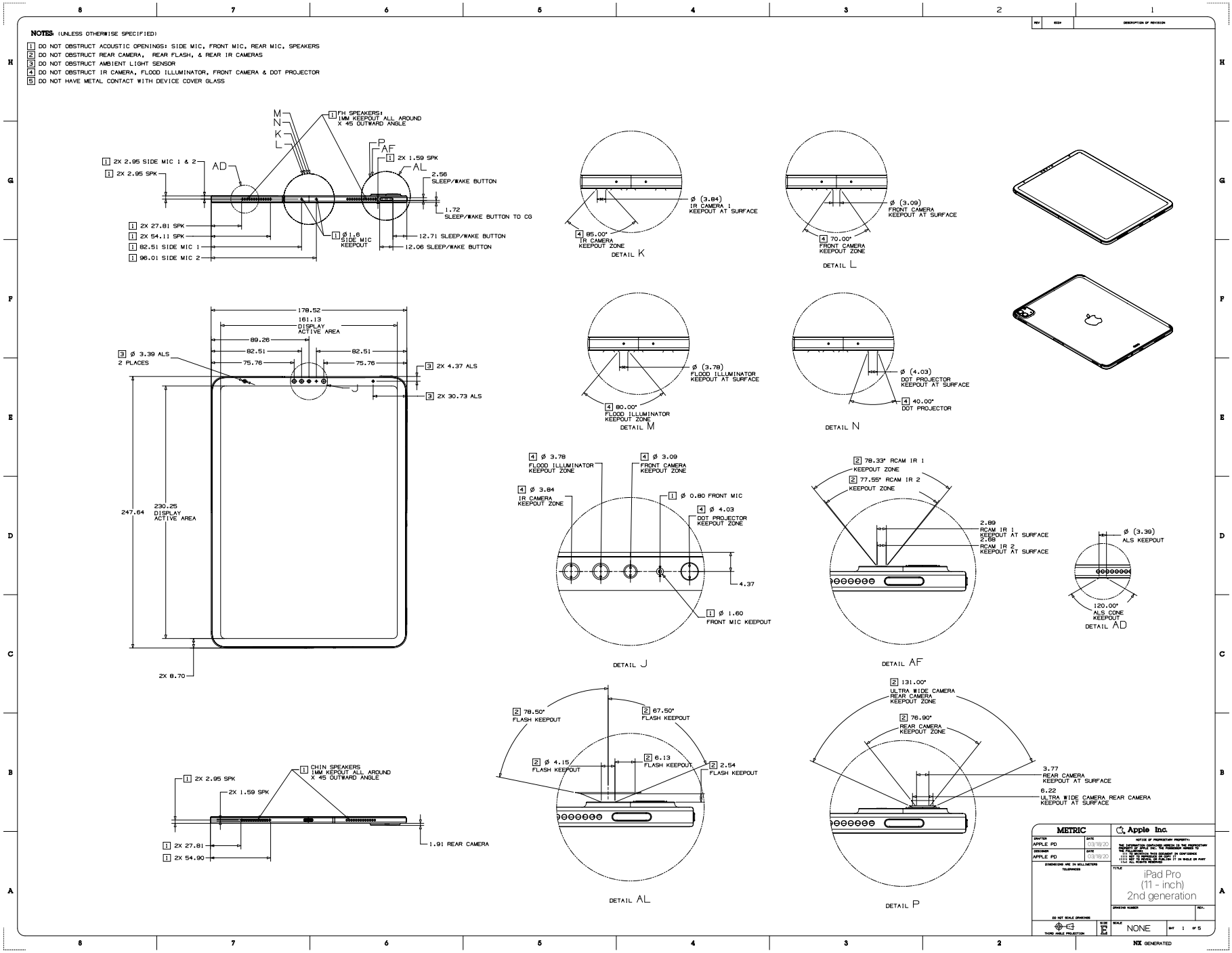

Copyright © 2023 Apple Inc. All Rights Reserved.

56.107 iPad Pro 11-inch (2nd generation) 2 of 5

[中文]

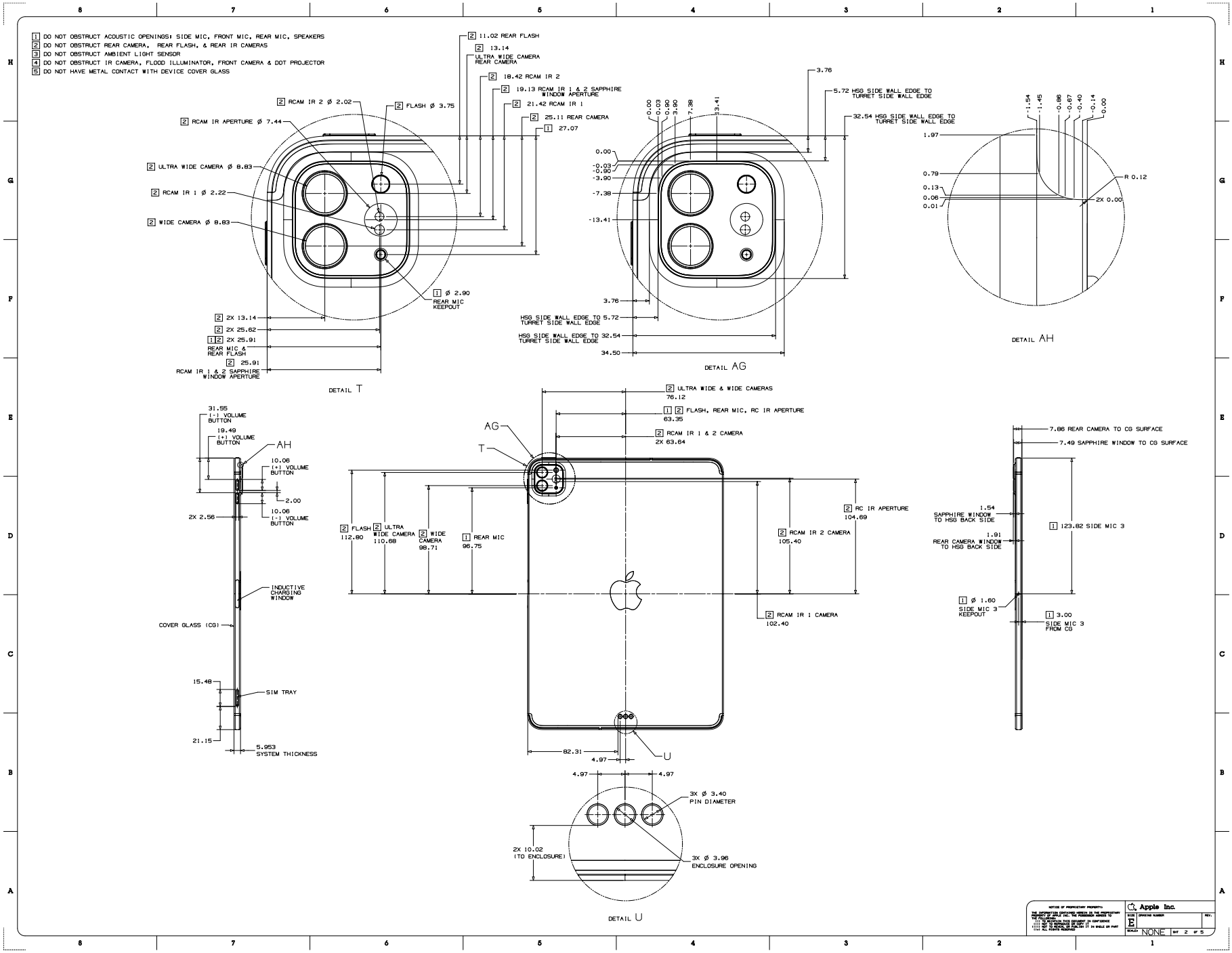

Copyright © 2023 Apple Inc. All Rights Reserved.

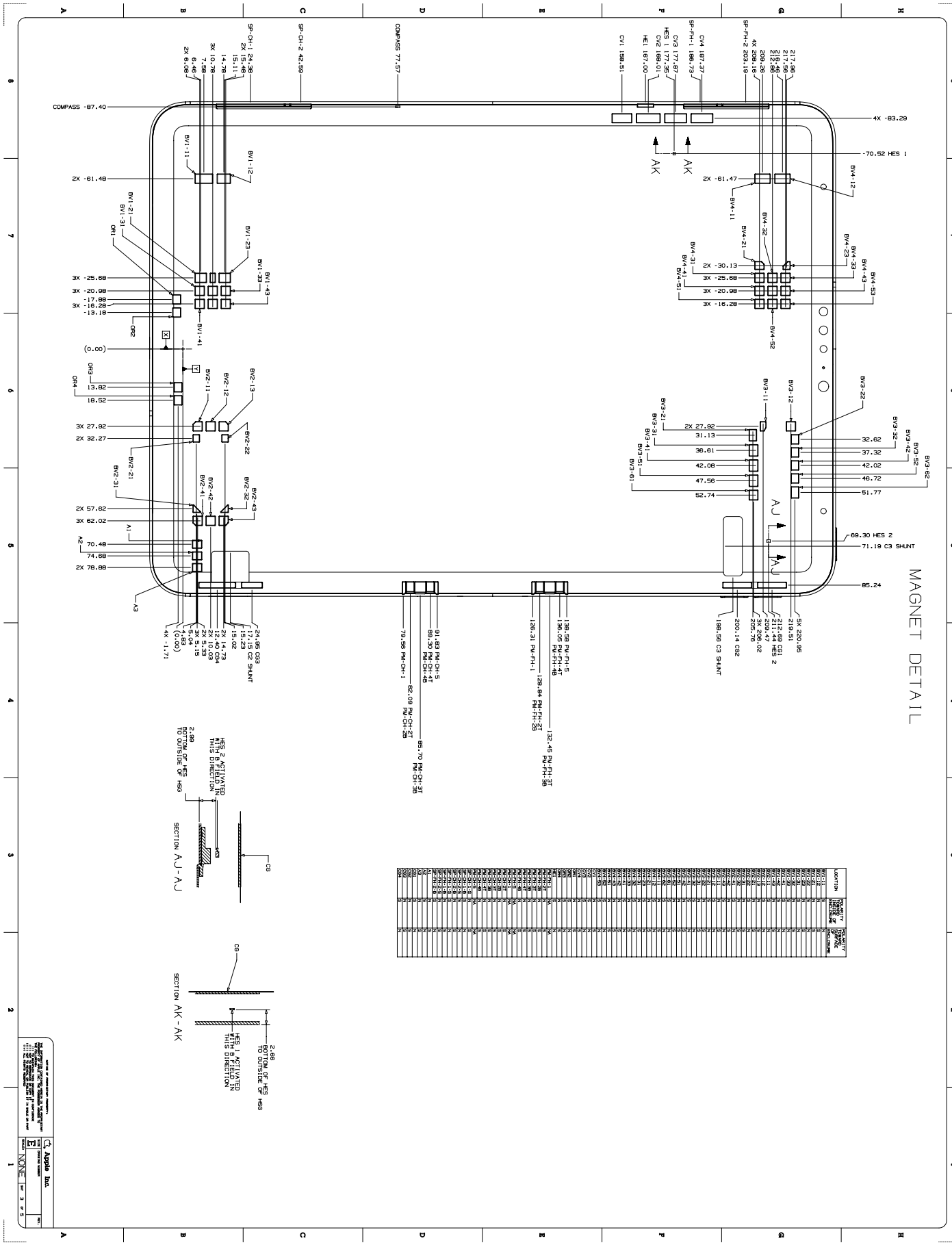
MAGNET DETAIL
SECTION AJ - AJ
SECTION AK - AK
HES 2 ACTIVATED WITH B FIELD IN THIS DIRECTION
2.99 BOTTOM OF HES TO OUTSIDE OF HSG
HES 1 ACTIVATED WITH B FIELD IN THIS DIRECTION
2.88 BOTTOM OF HES TO OUTSIDE OF HSG
Apple Inc.
NONE

56.109 iPad Pro 11-inch (2nd generation) 4 of 5

[中文]

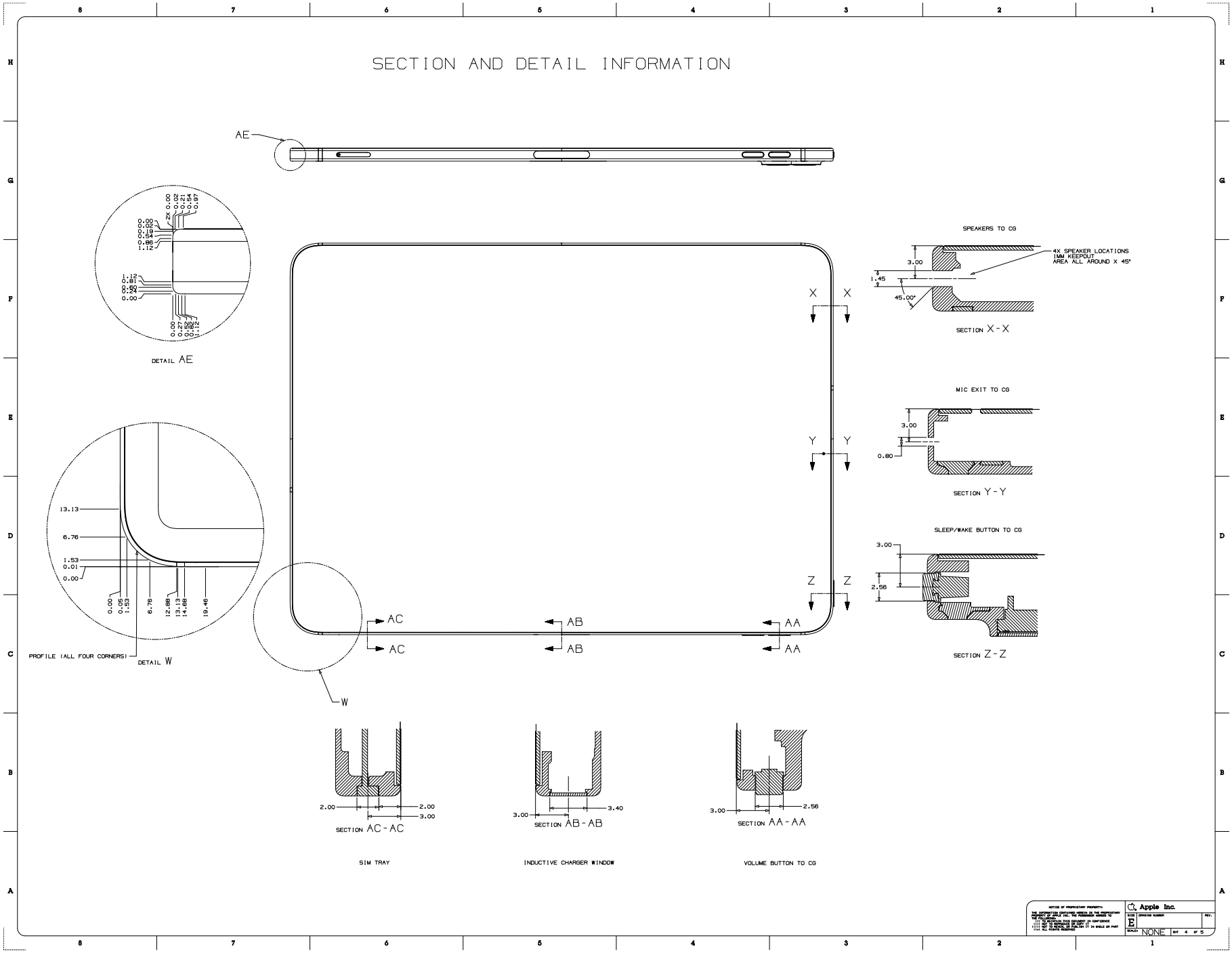

Copyright © 2023 Apple Inc. All Rights Reserved.

56.110 iPad Pro 11-inch (2nd generation) 5 of 5

[中文]

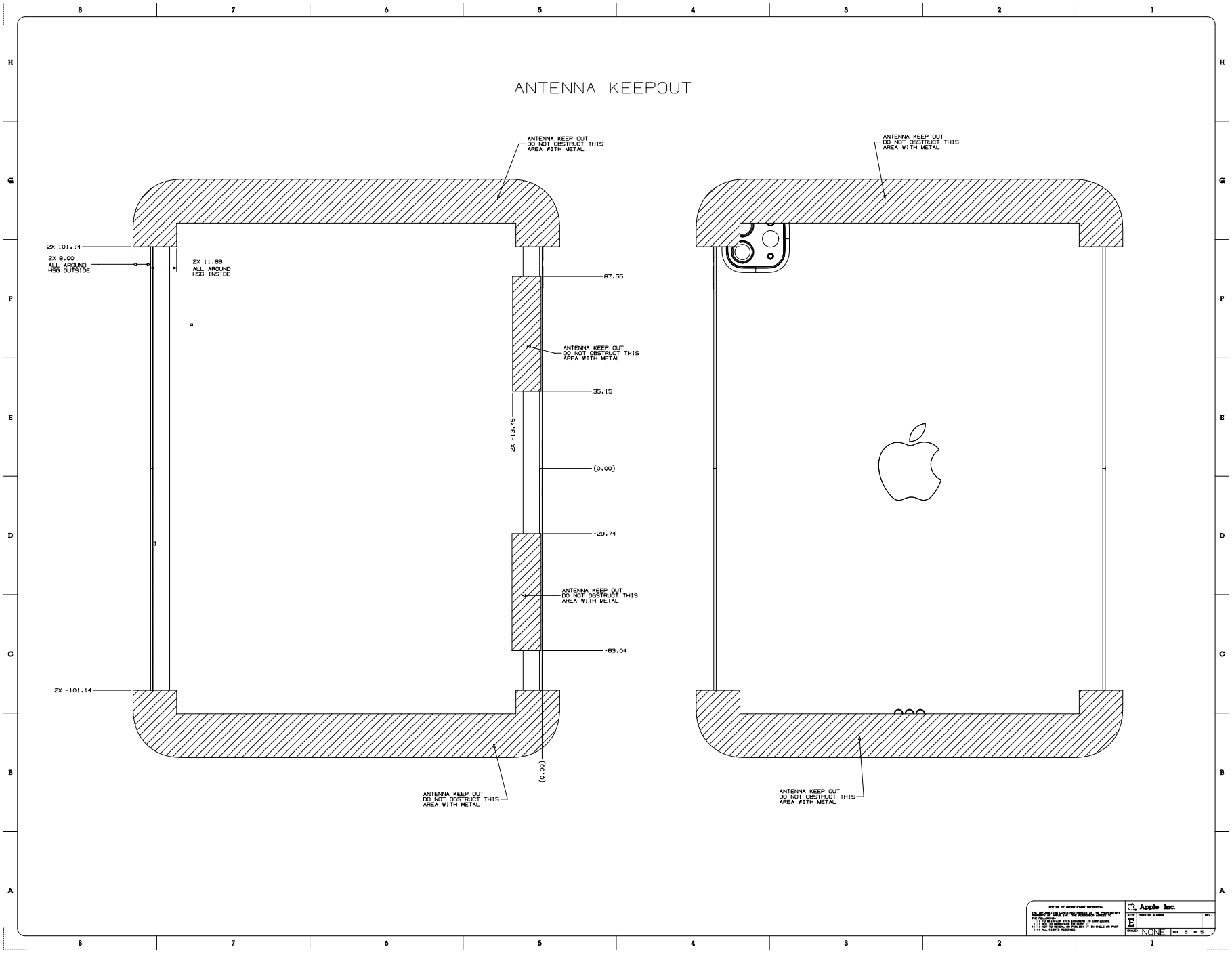

Copyright © 2023 Apple Inc. All Rights Reserved.

56.111 iPad Air (3rd generation) with Wi-Fi 1 of 3

[中文]

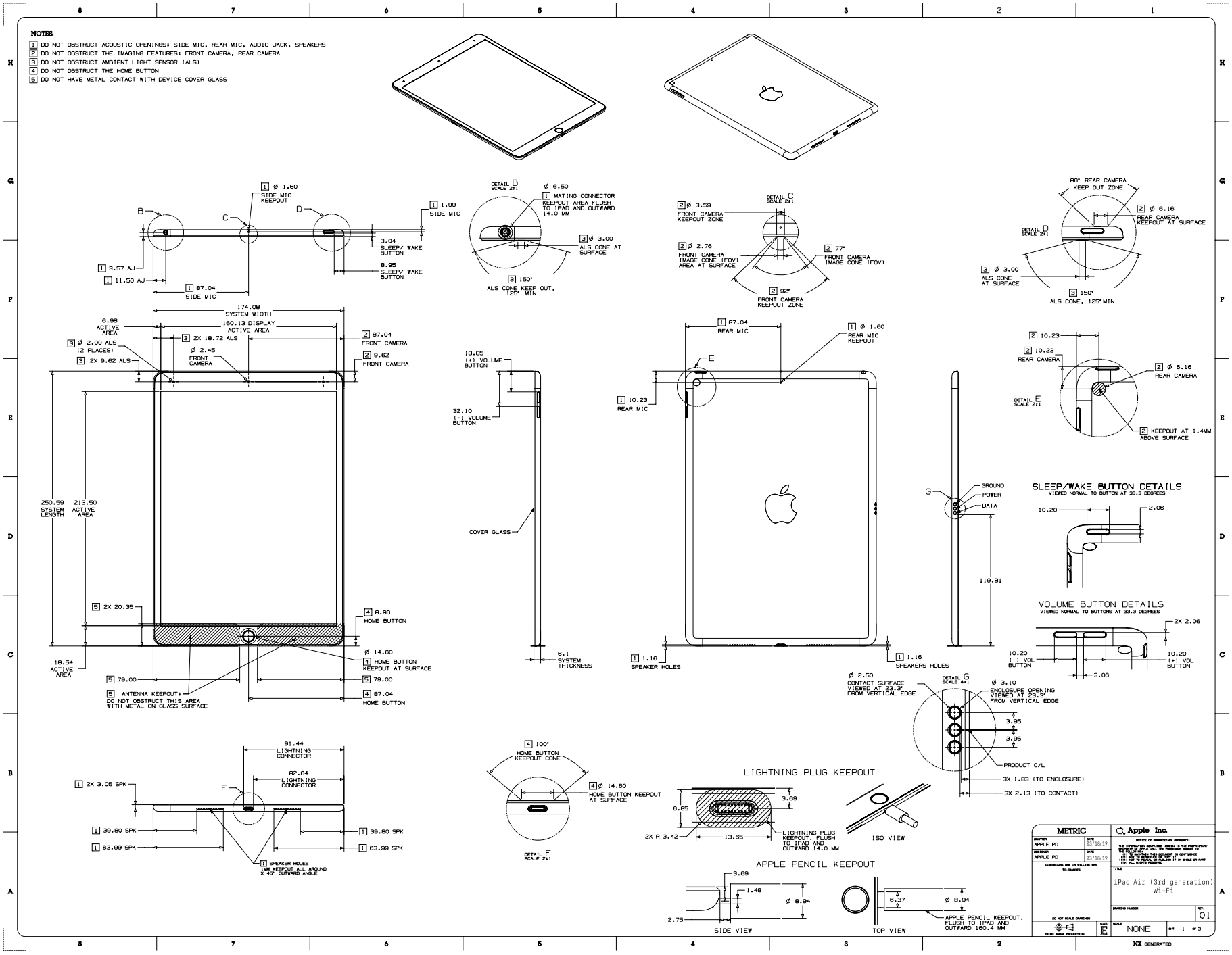

 Copyright © 2023 Apple Inc. All Rights Reserved.

56.112 iPad Air (3rd generation) with Wi-Fi 2 of 3

[中文]

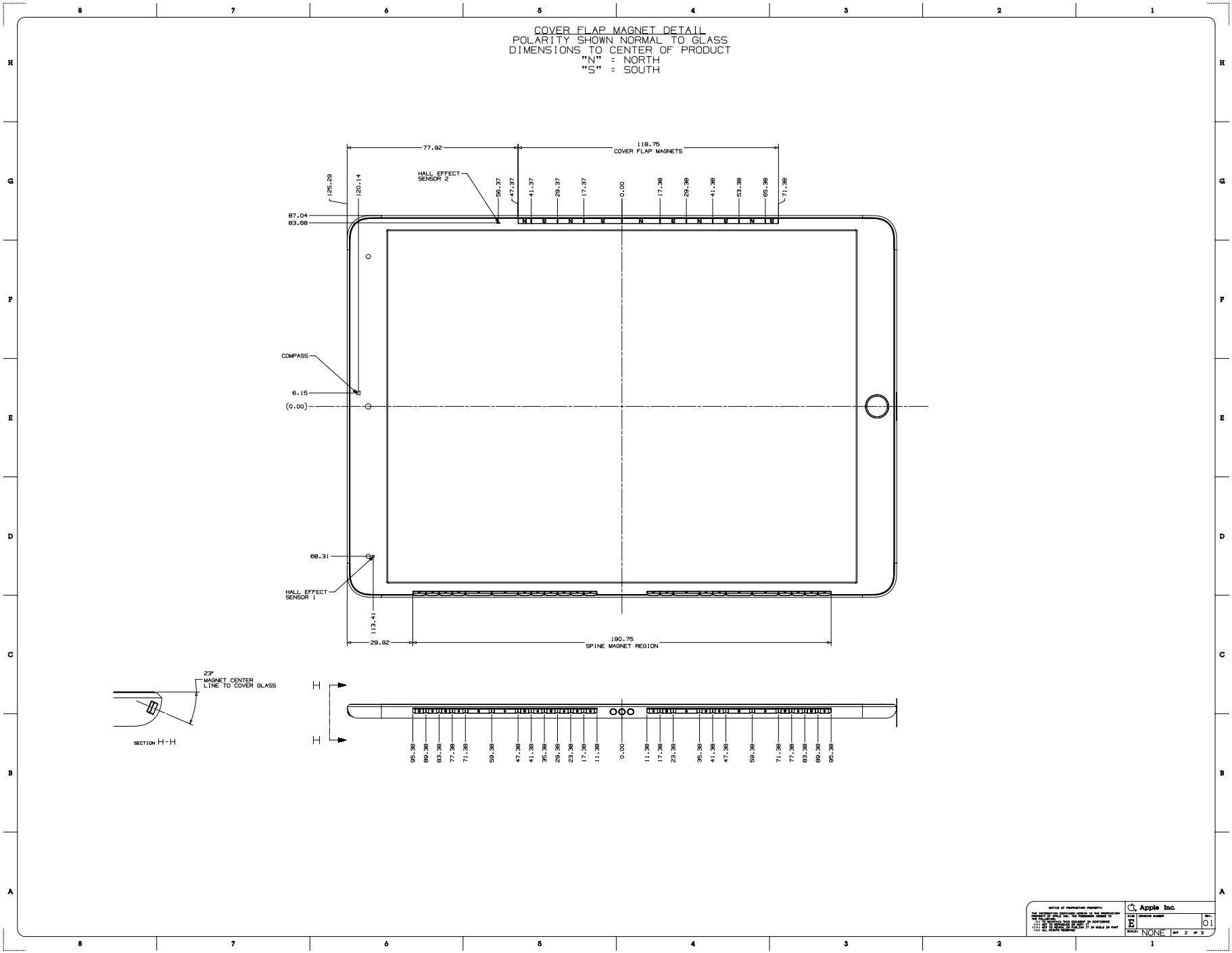

Copyright © 2023 Apple Inc. All Rights Reserved.

56.113 iPad Air (3rd generation) with Wi-Fi 3 of 3

[中文]

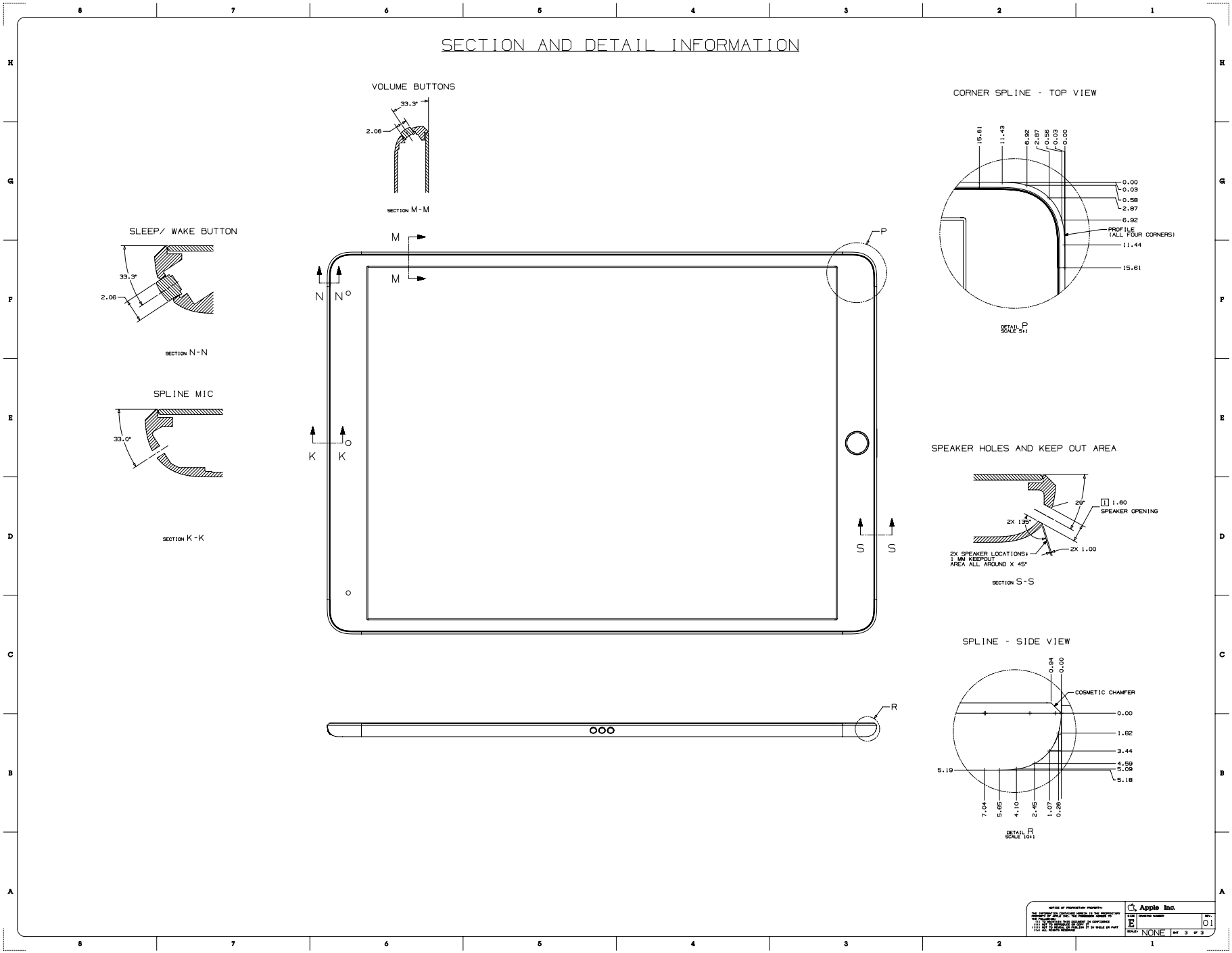

56.114 iPad Air (3rd generation) with Wi-Fi + Cellular 1 of 3

[中文]

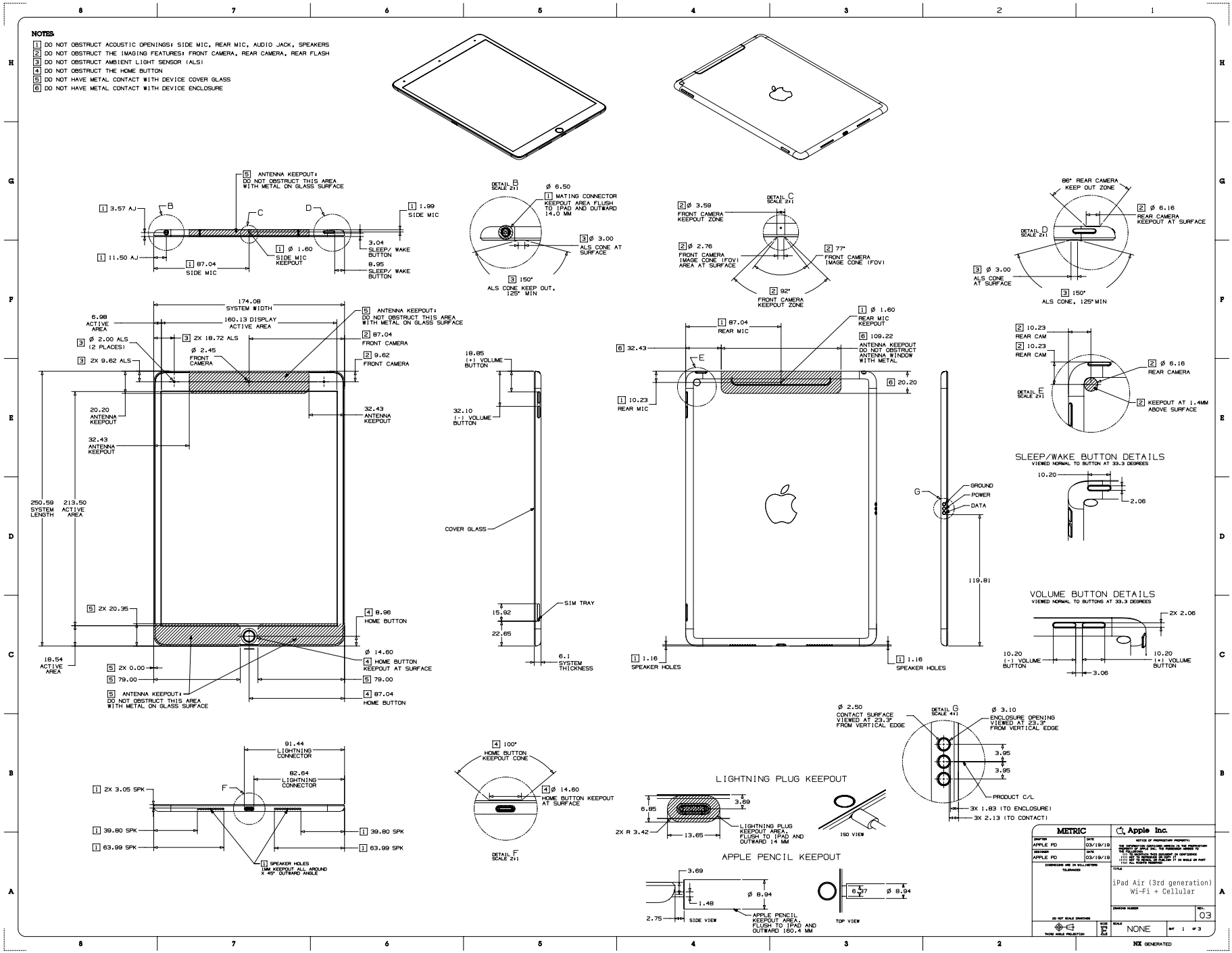

Copyright © 2023 Apple Inc. All Rights Reserved.

56.115 iPad Air (3rd generation) with Wi-Fi + Cellular 2 of 3

[中文]

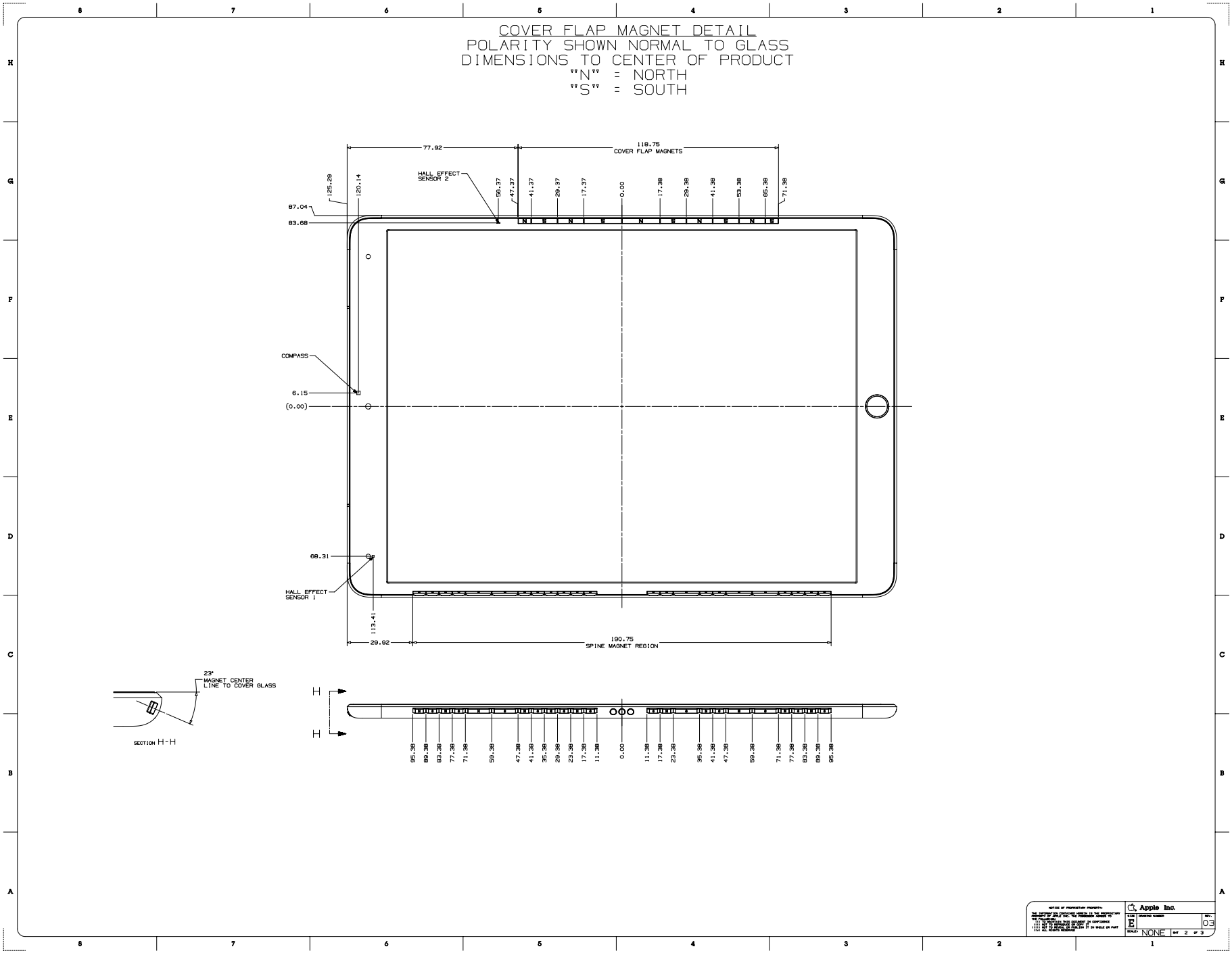

Copyright © 2023 Apple Inc. All Rights Reserved.

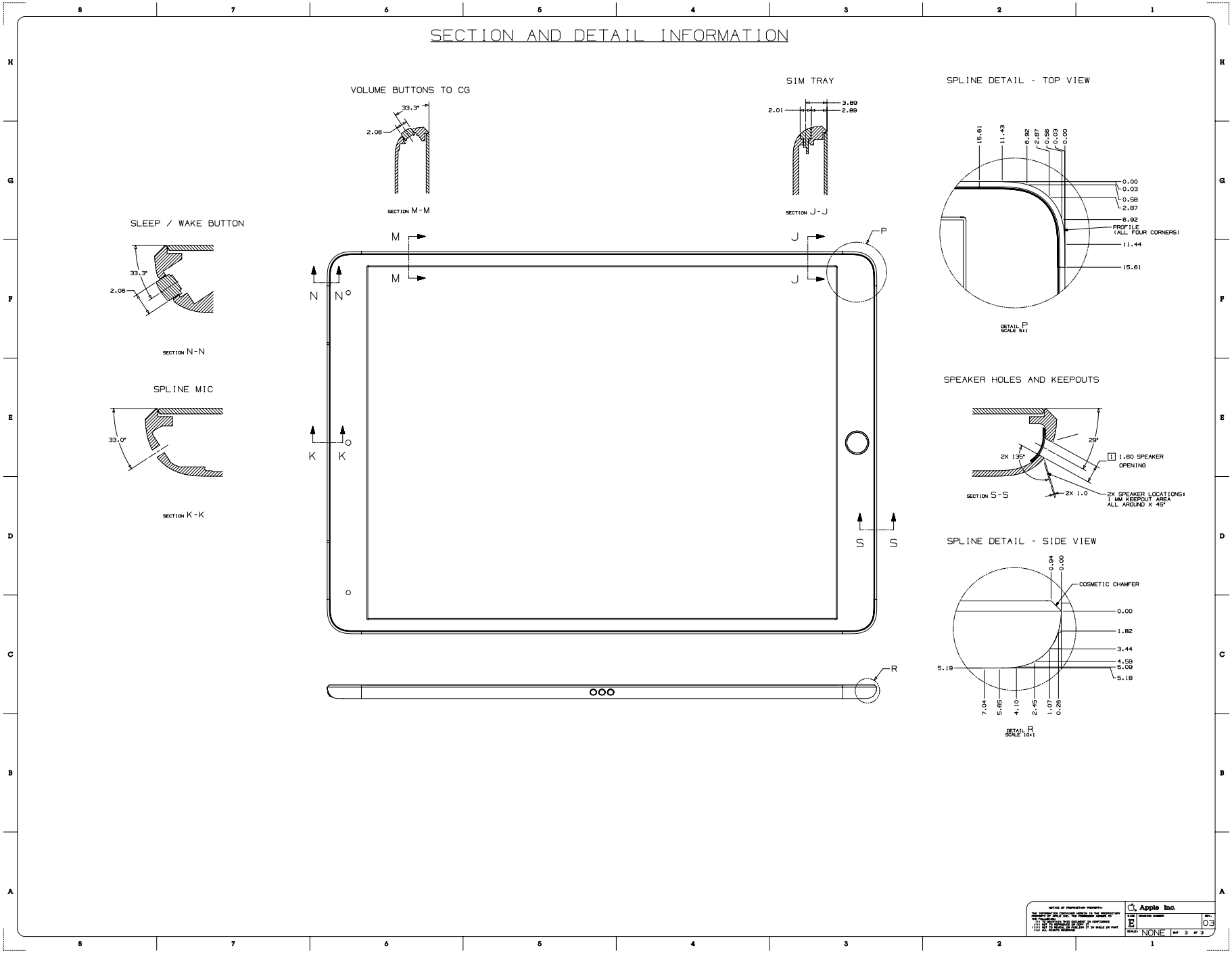

Copyright © 2023 Apple Inc. All Rights Reserved.

56.117 iPad mini (5th generation) with Wi-Fi 1 of 3

[中文]

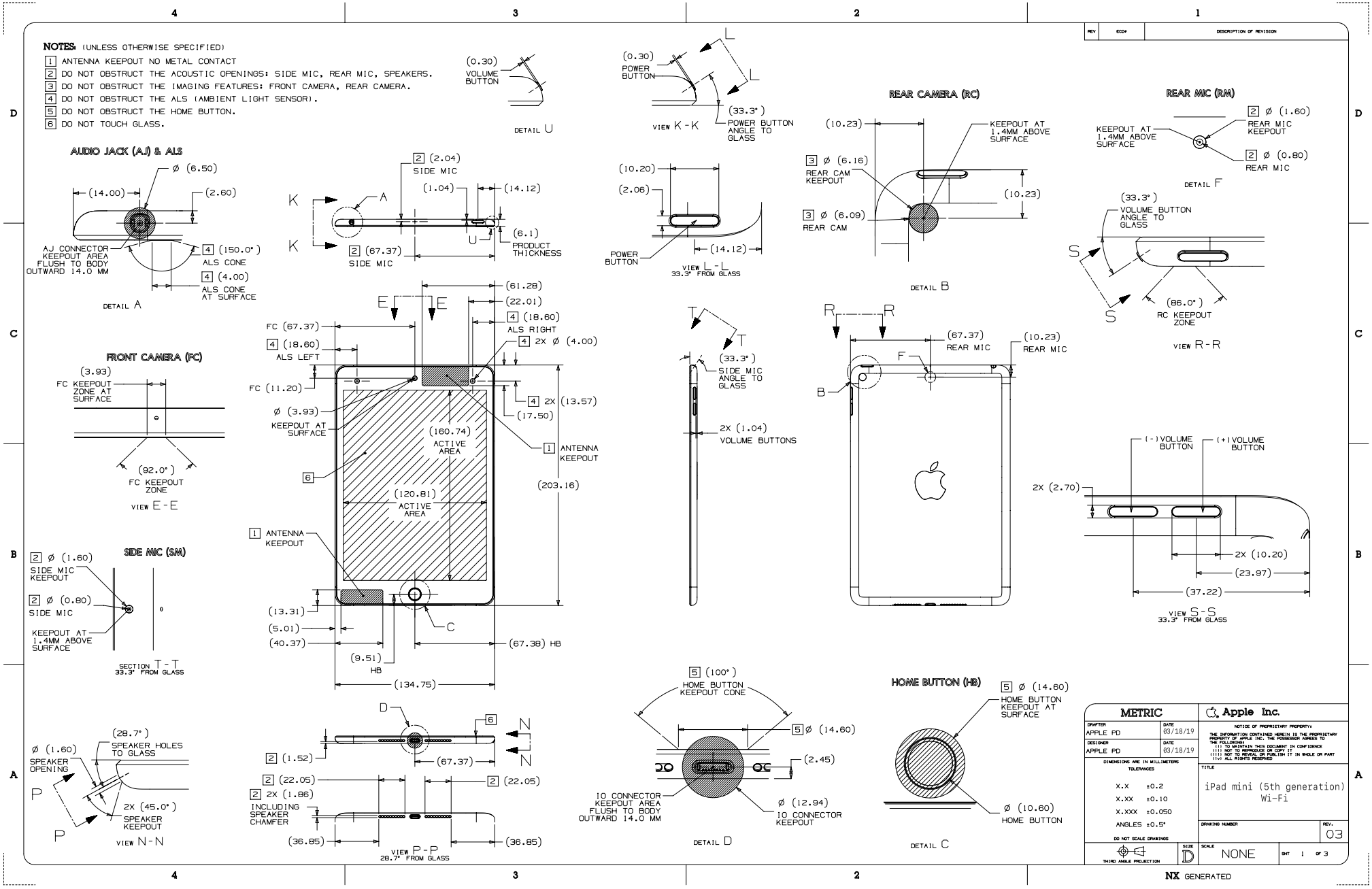

Copyright © 2023 Apple Inc. All Rights Reserved.

56.118 iPad mini (5th generation) with Wi-Fi 2 of 3

[中文]

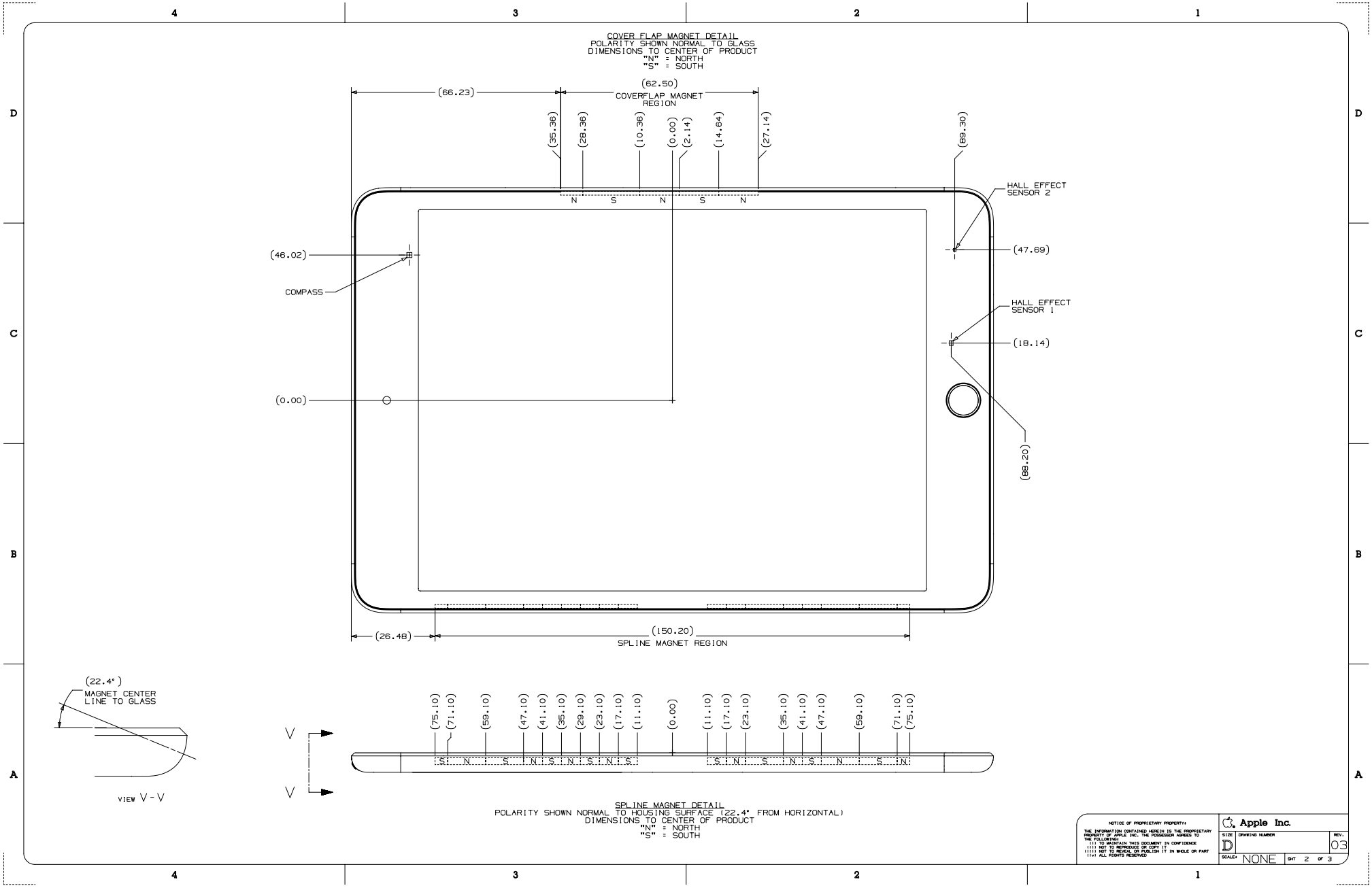

56.119 iPad mini (5th generation) with Wi-Fi 3 of 3

[中文]

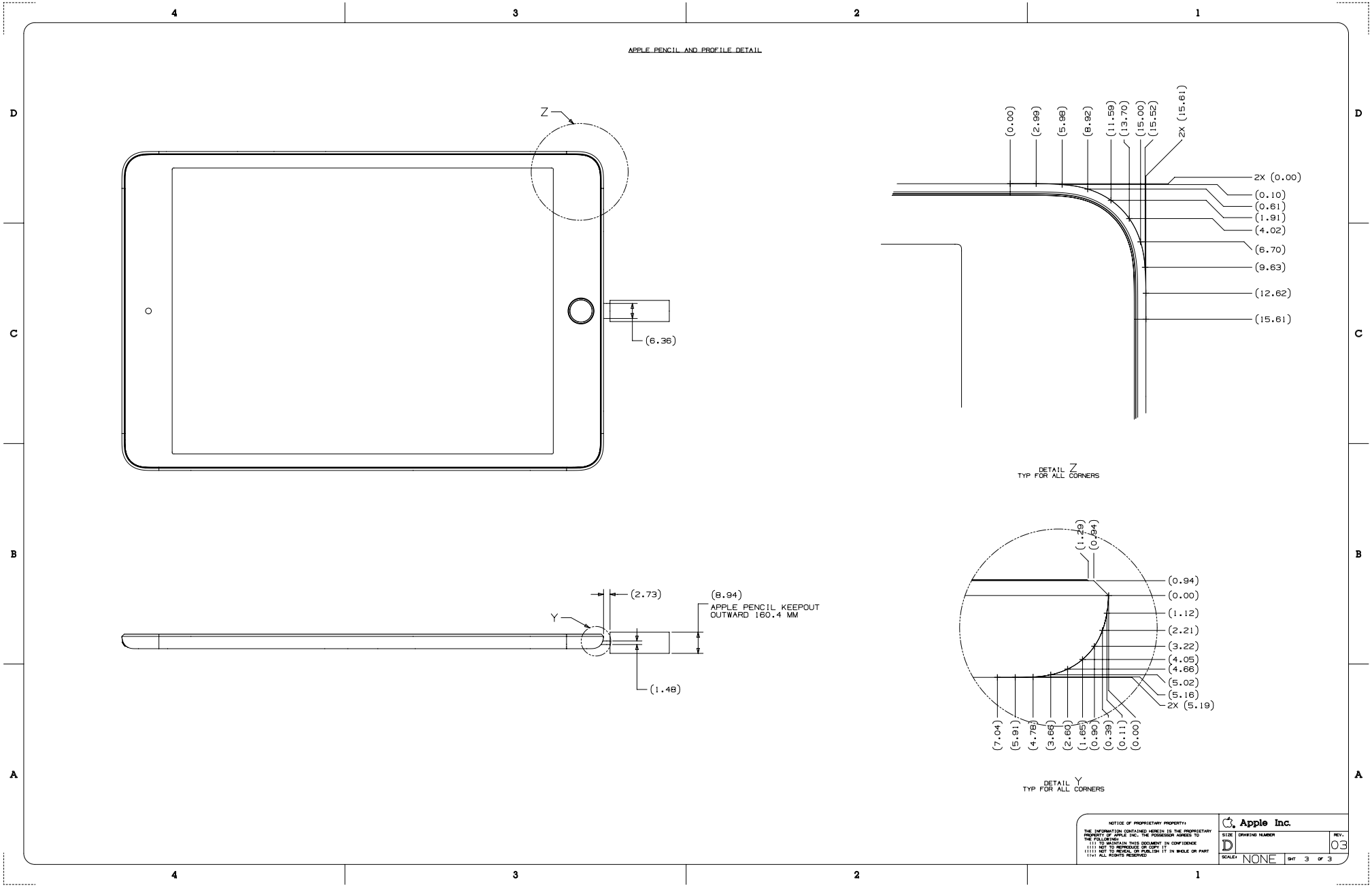

Copyright © 2023 Apple Inc. All Rights Reserved.

56.120 iPad mini (5th generation) with Wi-Fi + Cellular 1 of 3

[中文]

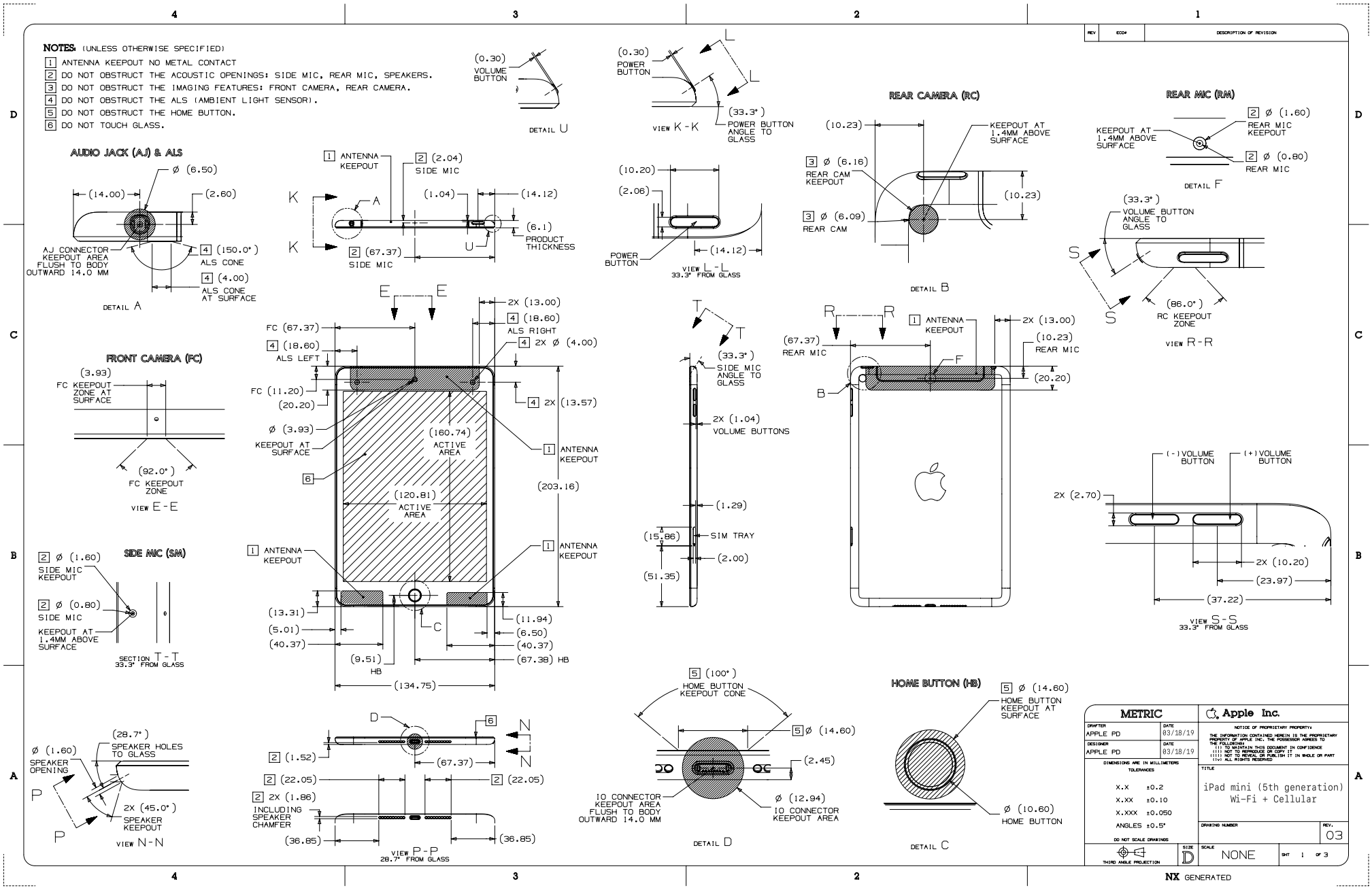

Copyright © 2023 Apple Inc. All Rights Reserved.

56.121 iPad mini (5th generation) with Wi-Fi + Cellular 2 of 3

[中文]

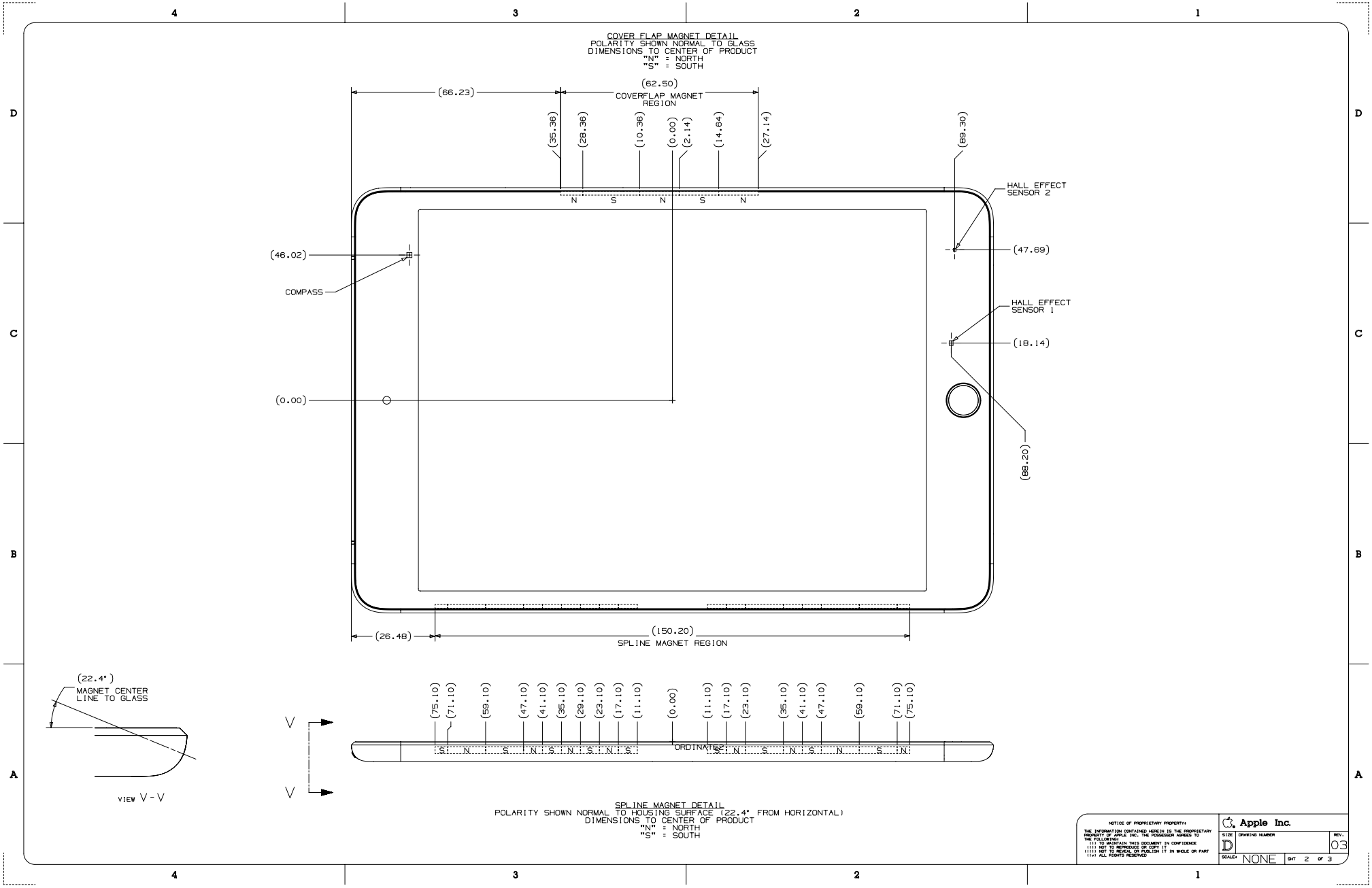
COVER FLAP MAGNET DETAIL
POLARITY SHOWN NORMAL TO GLASS
DIMENSIONS TO CENTER OF PRODUCT
"N" = NORTH
"S" = SOUTH
(66.23)
(62.50)
COVERFLAP MAGNET REGION
(35.36)
(28.36)
(10.36)
(0.00)
(2.14)
(14.64)
(27.14)
(89.30)
N S N S N
HALL EFFECT SENSOR 2
(46.02)
COMPASS
(47.69)
HALL EFFECT SENSOR 1
(18.14)
(0.00)
(68.20)
(26.48)
(150.20)
SPLINE MAGNET REGION
(22.4°)
MAGNET CENTER LINE TO GLASS
VIEW V-V
(75.10) (71.10) (59.10) (47.10) (41.10) (35.10) (29.10) (23.10) (17.10) (11.10) (0.00) (11.10) (17.10) (23.10) (35.10) (41.10) (47.10) (59.10) (71.10) (75.10)
S N S N S N

56.122 iPad mini (5th generation) with Wi-Fi + Cellular 3 of 3

[中文]

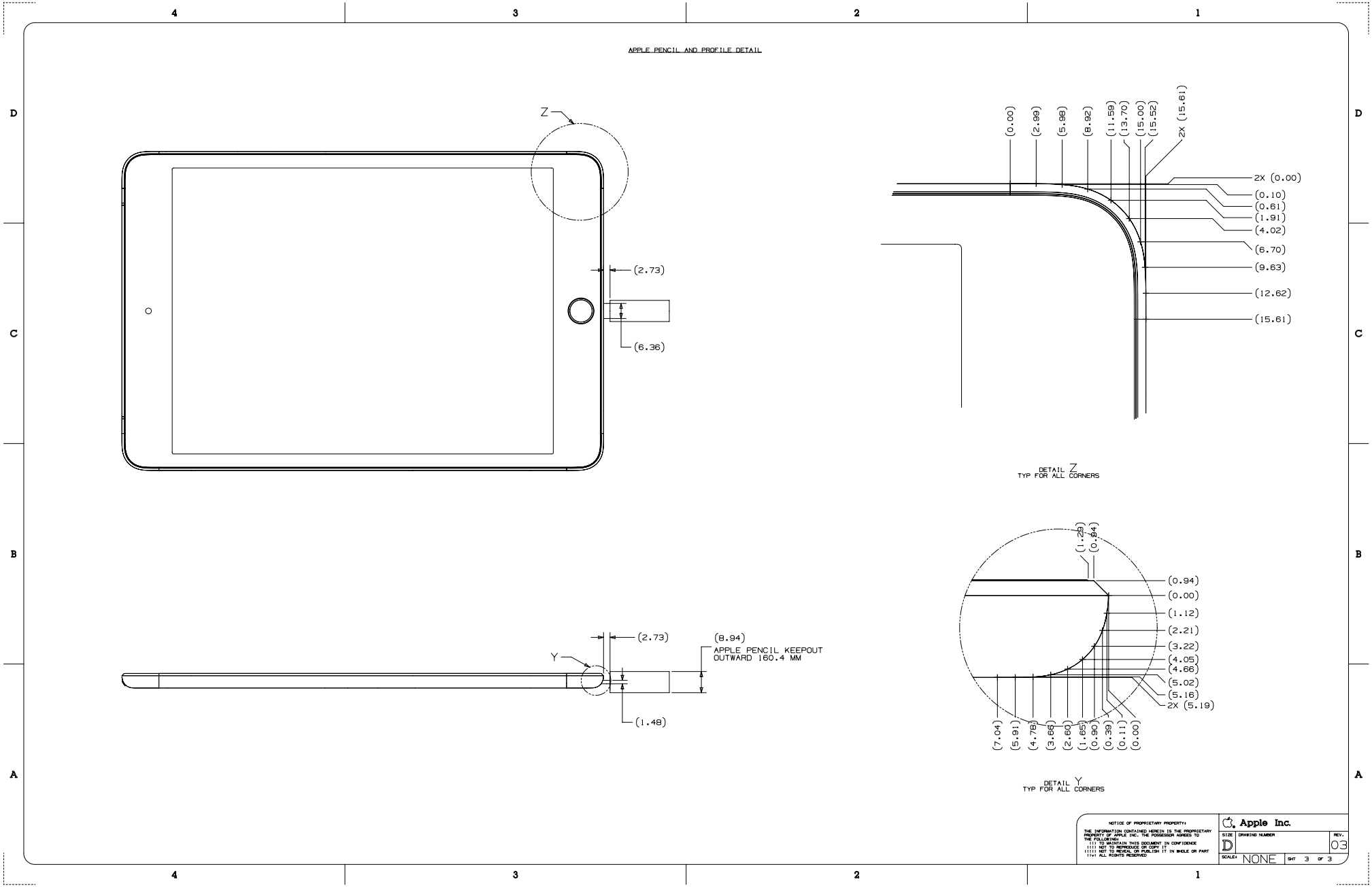

Copyright © 2023 Apple Inc. All Rights Reserved.

56.123 iPad Pro 12.9-inch (3rd generation) 1 of 3

[中文]

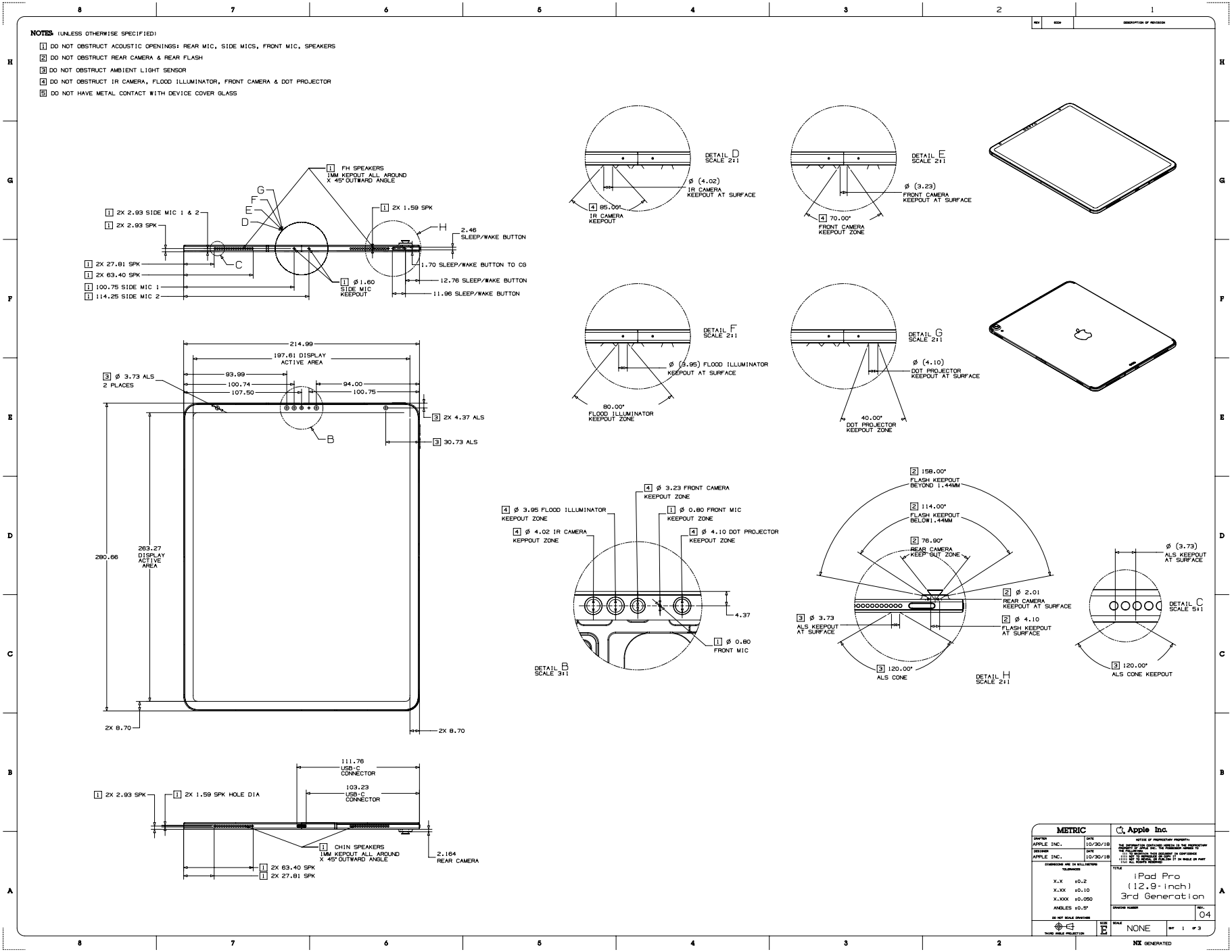

Copyright © 2023 Apple Inc. All Rights Reserved.

56.124 iPad Pro 12.9-inch (3rd generation) 2 of 3 [中文]

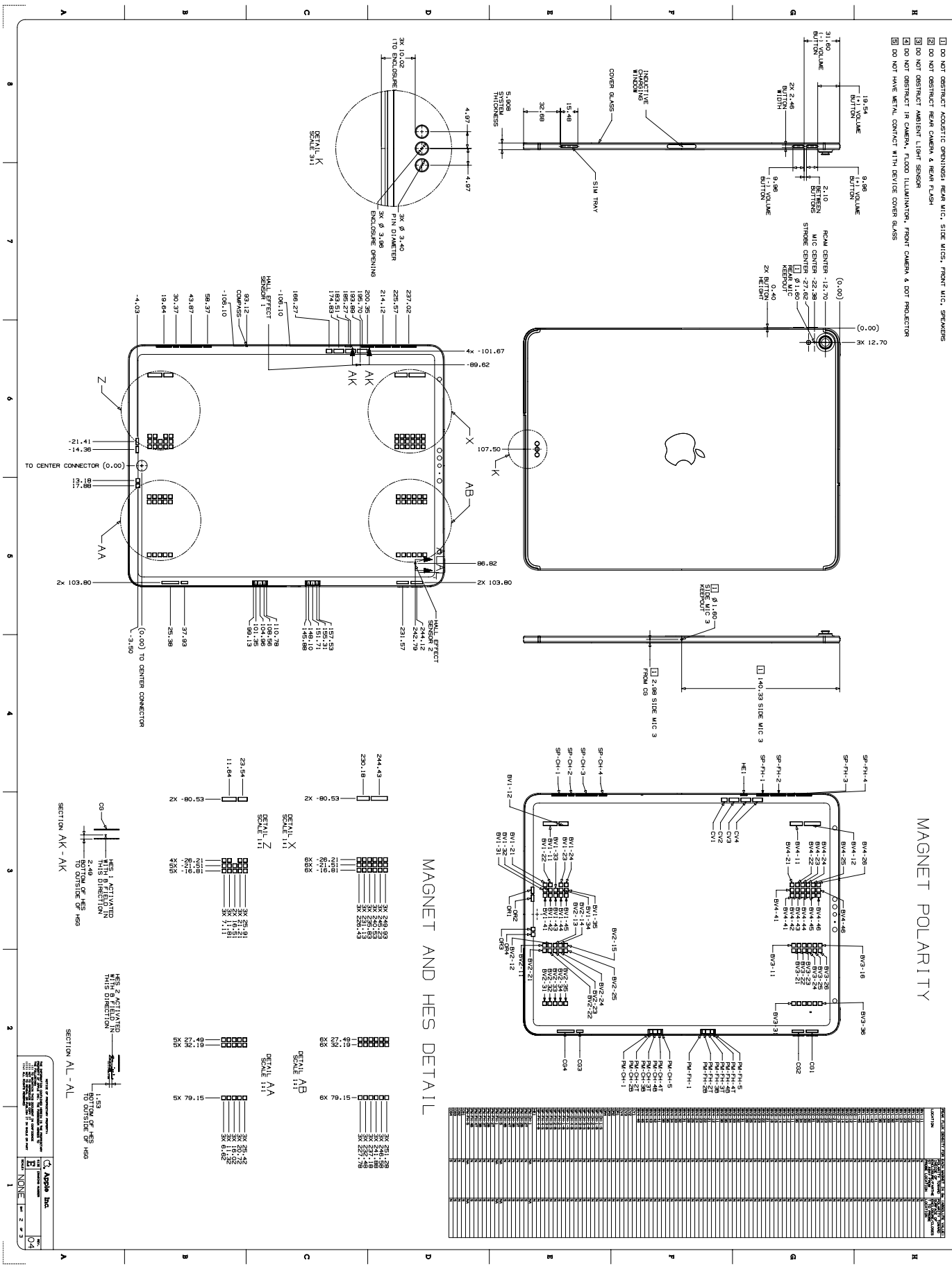

56.125 iPad Pro 12.9-inch (3rd generation) 3 of 3

[中文]

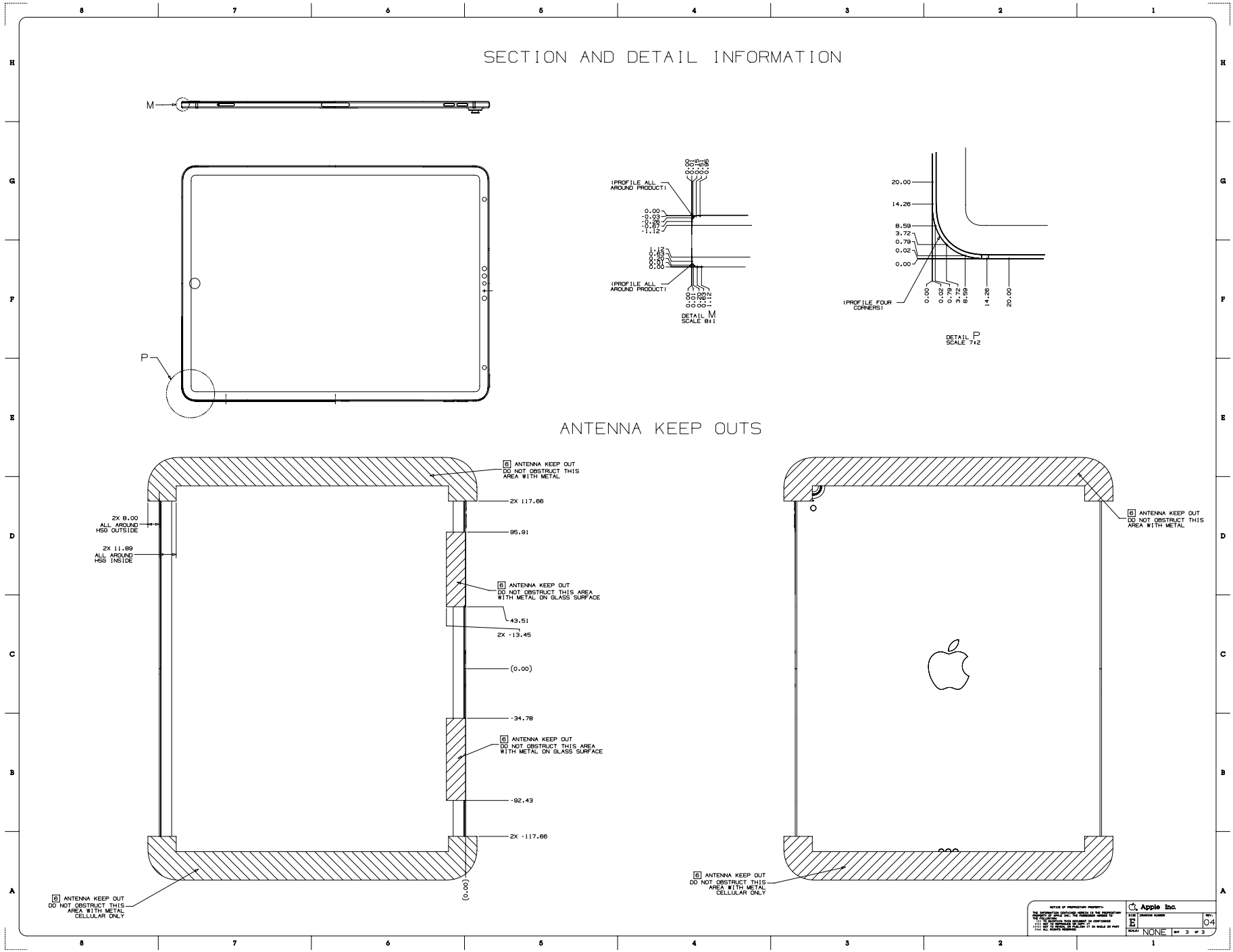

 Copyright © 2023 Apple Inc. All Rights Reserved.

56.126 iPad Pro 11-inch (1st generation) 1 of 3

[中文]

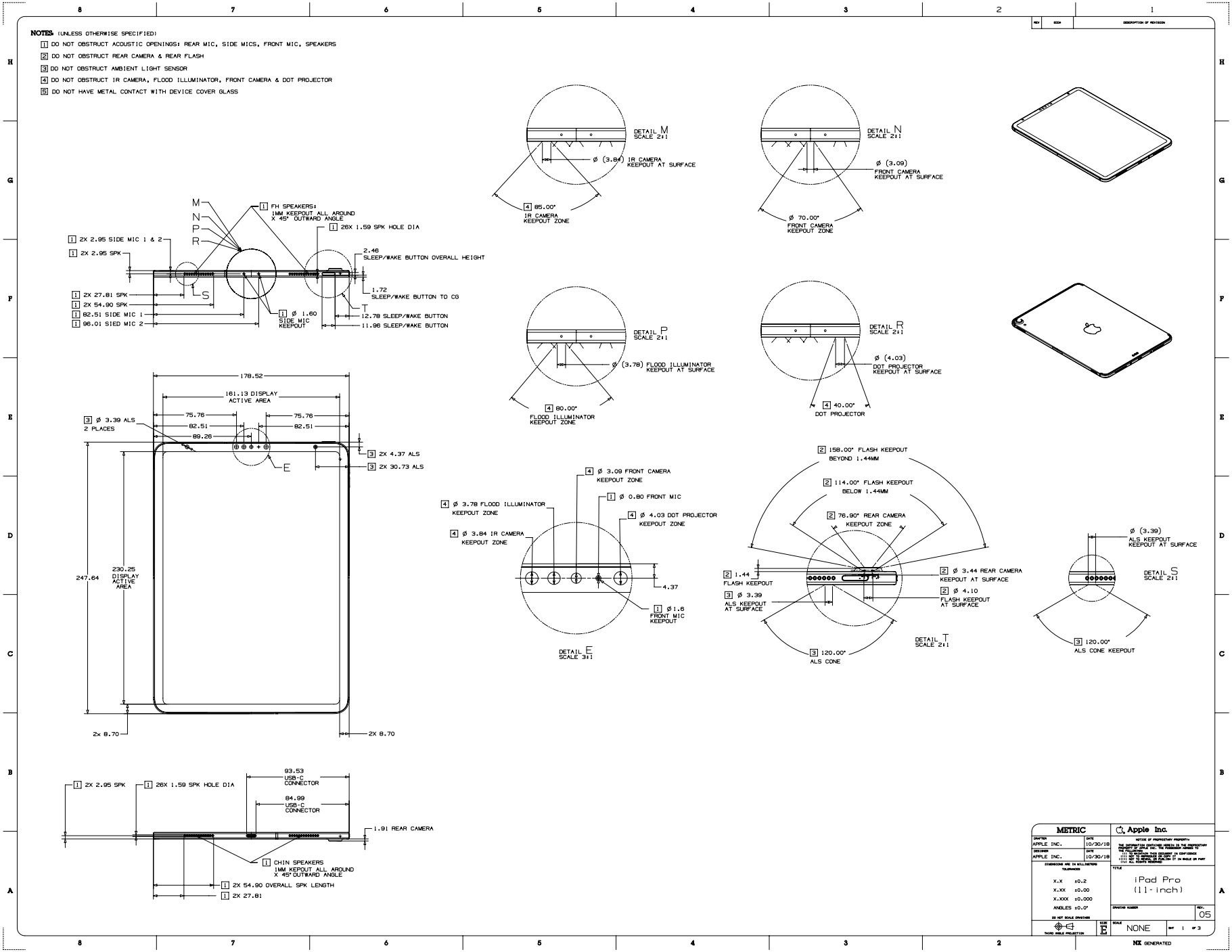

Copyright © 2023 Apple Inc. All Rights Reserved.

56.127 iPad Pro 11-inch (1st generation) 2 of 3

[中文]

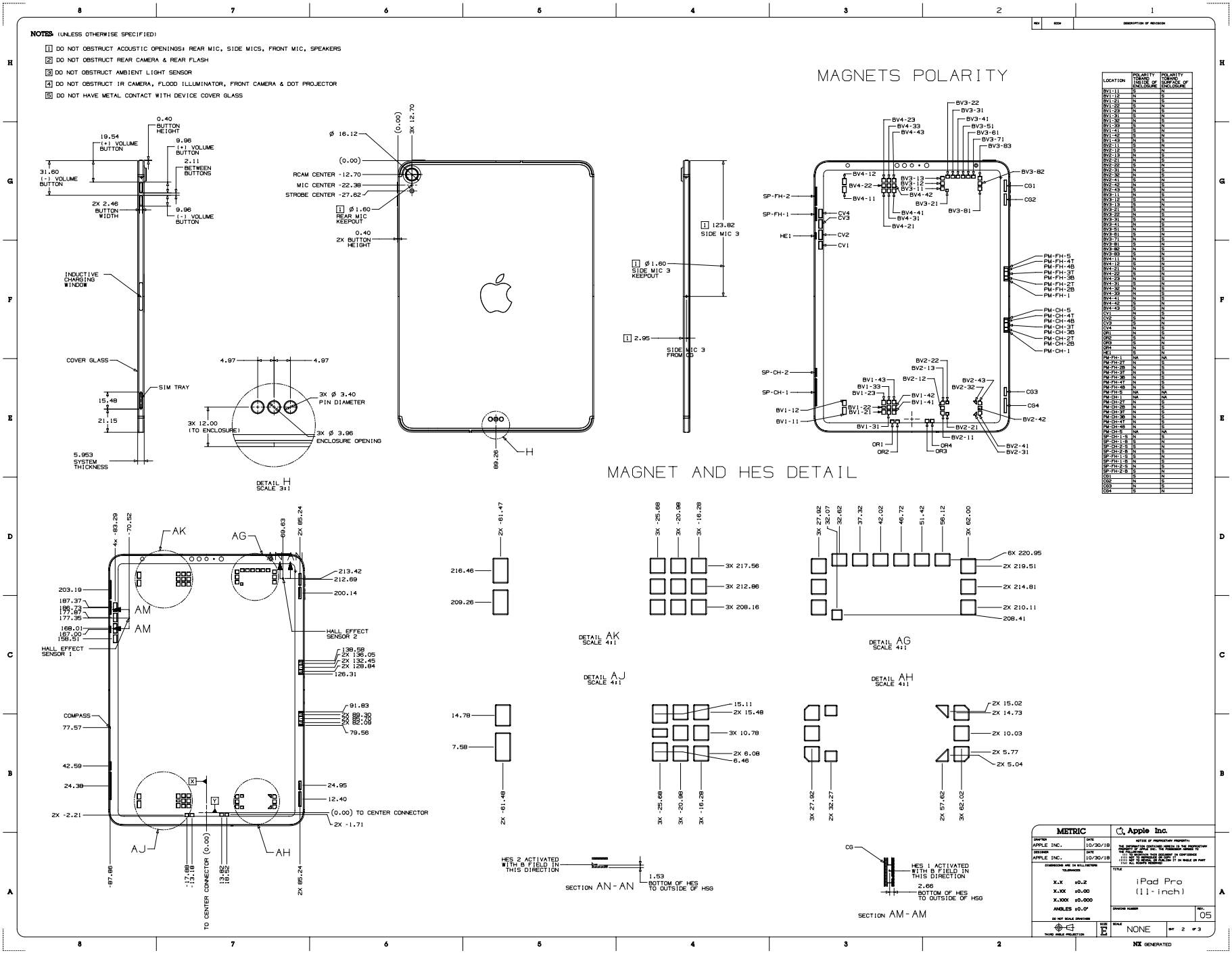

Copyright © 2023 Apple Inc. All Rights Reserved.

56.128 iPad Pro 11-inch (1st generation) 3 of 3

[中文]

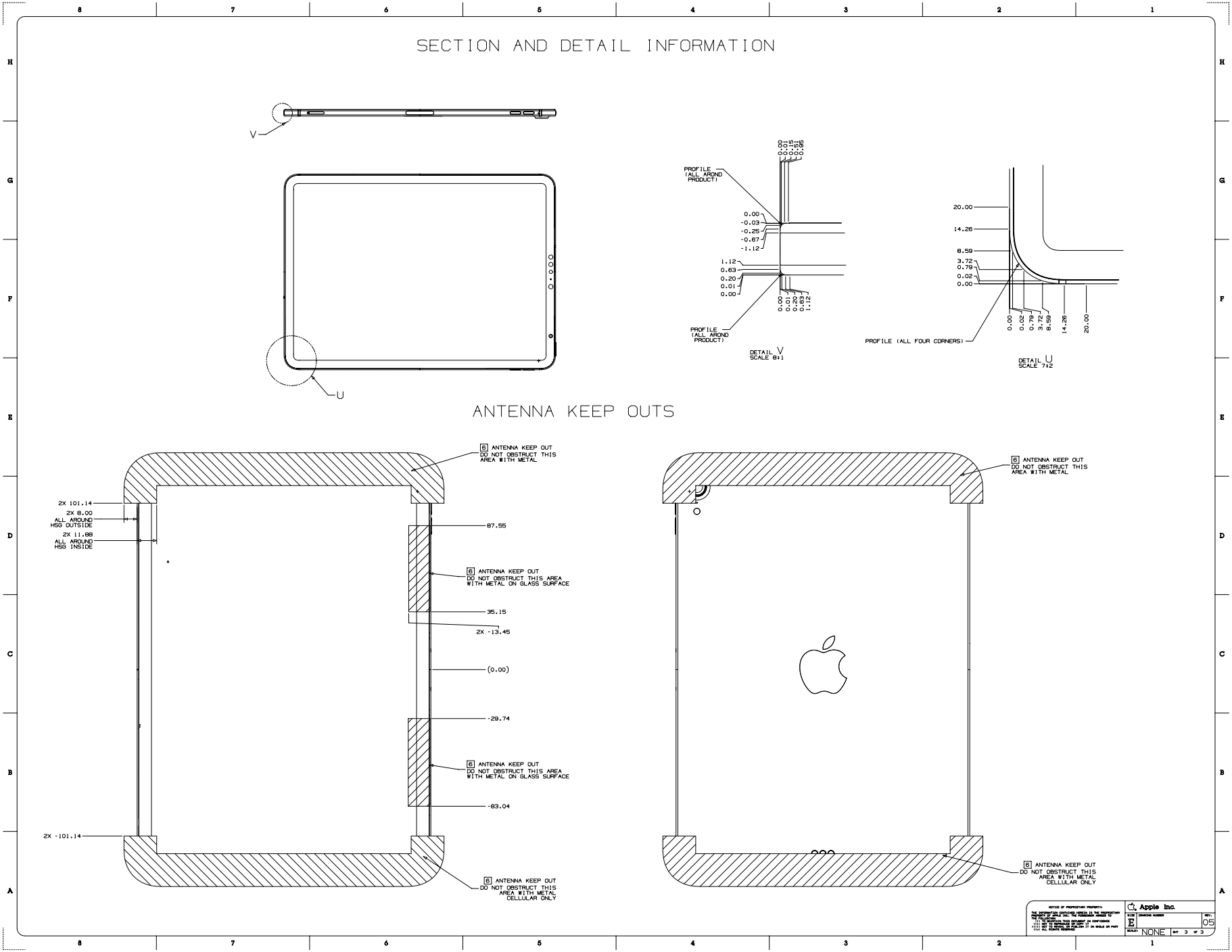

 Copyright © 2023 Apple Inc. All Rights Reserved.

56.129 iPad Pro 12.9-inch (2nd generation) with Wi-Fi

[中文]

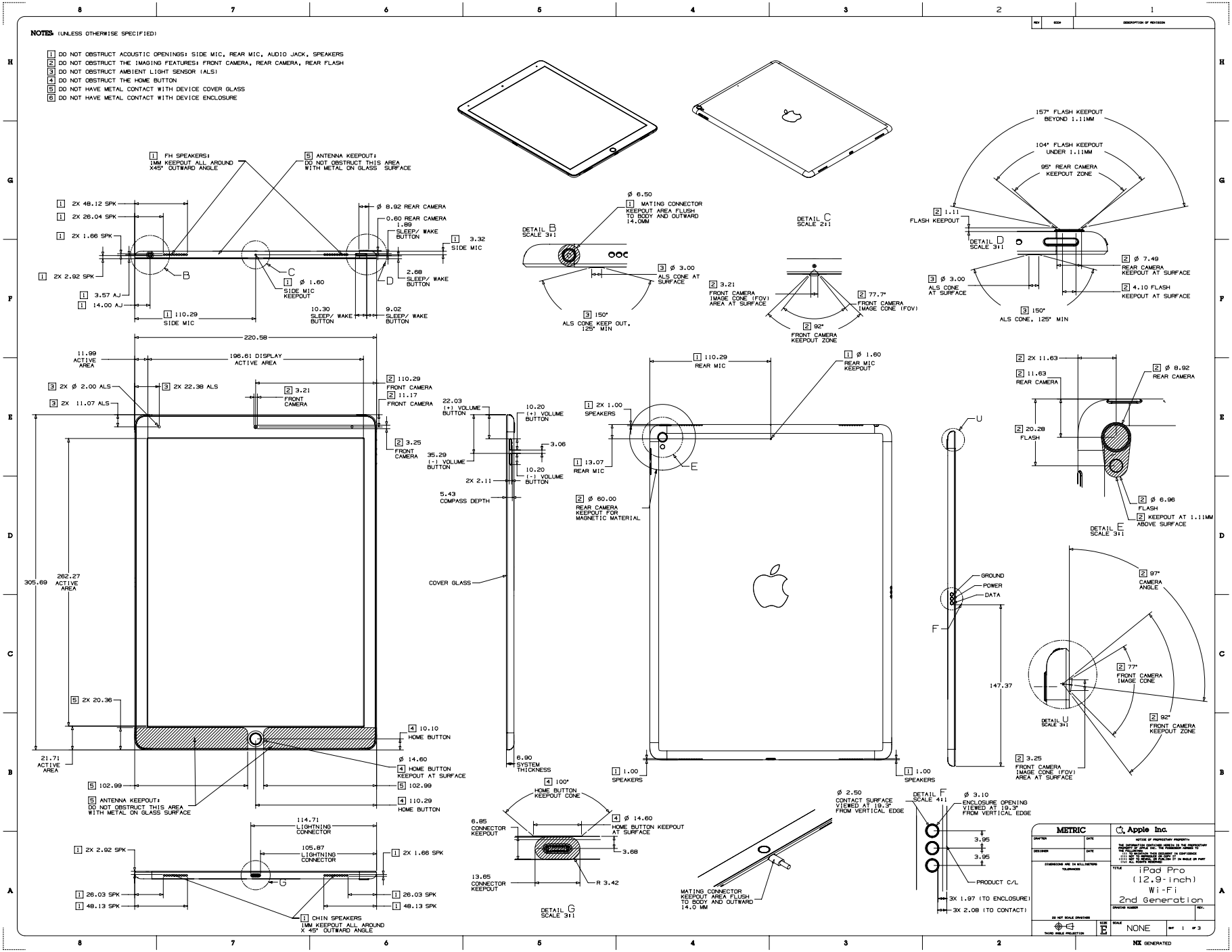

Copyright © 2023 Apple Inc. All Rights Reserved.

56.130 iPad Pro 12.9-inch (2nd generation) with Wi-Fi + Cellular

[中文]

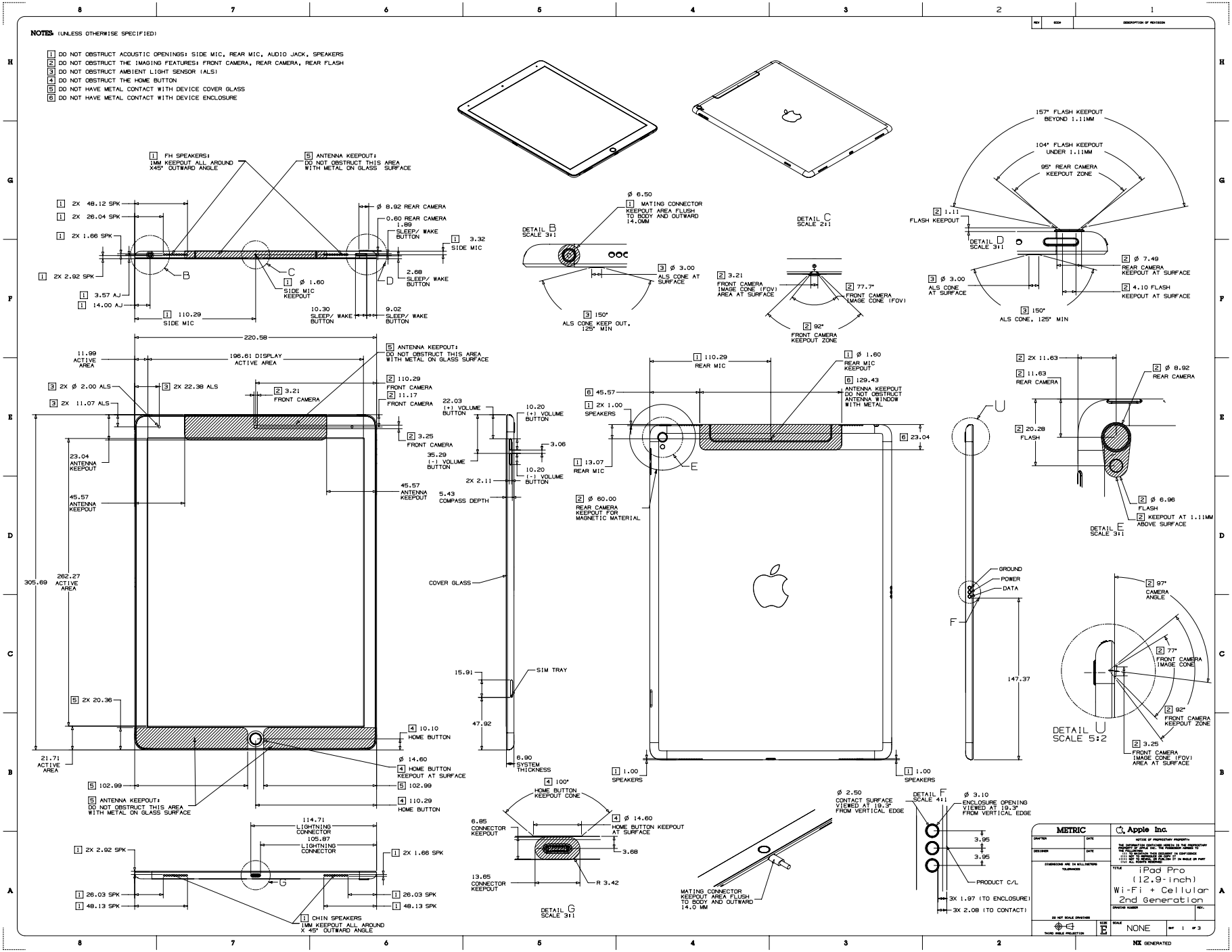

Copyright © 2023 Apple Inc. All Rights Reserved.

56.131 iPad Pro 12.9-inch (2nd generation) Magnet/Hall Effect Sensors 1 of 2

[中文]

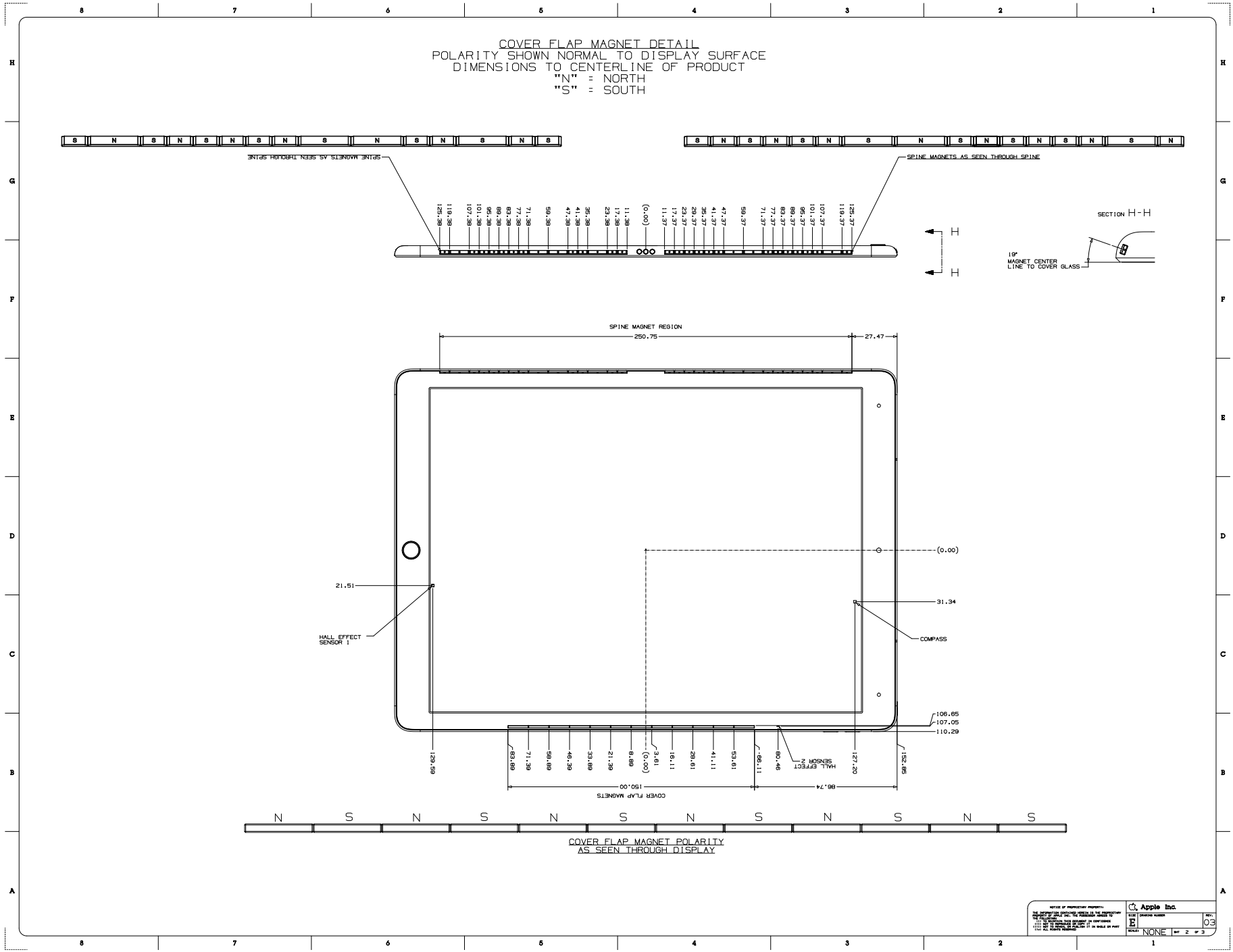

Copyright © 2023 Apple Inc. All Rights Reserved.

56.132 iPad Pro 12.9-inch (2nd generation) Magnet/Hall Effect Sensors 2 of 2

[中文]

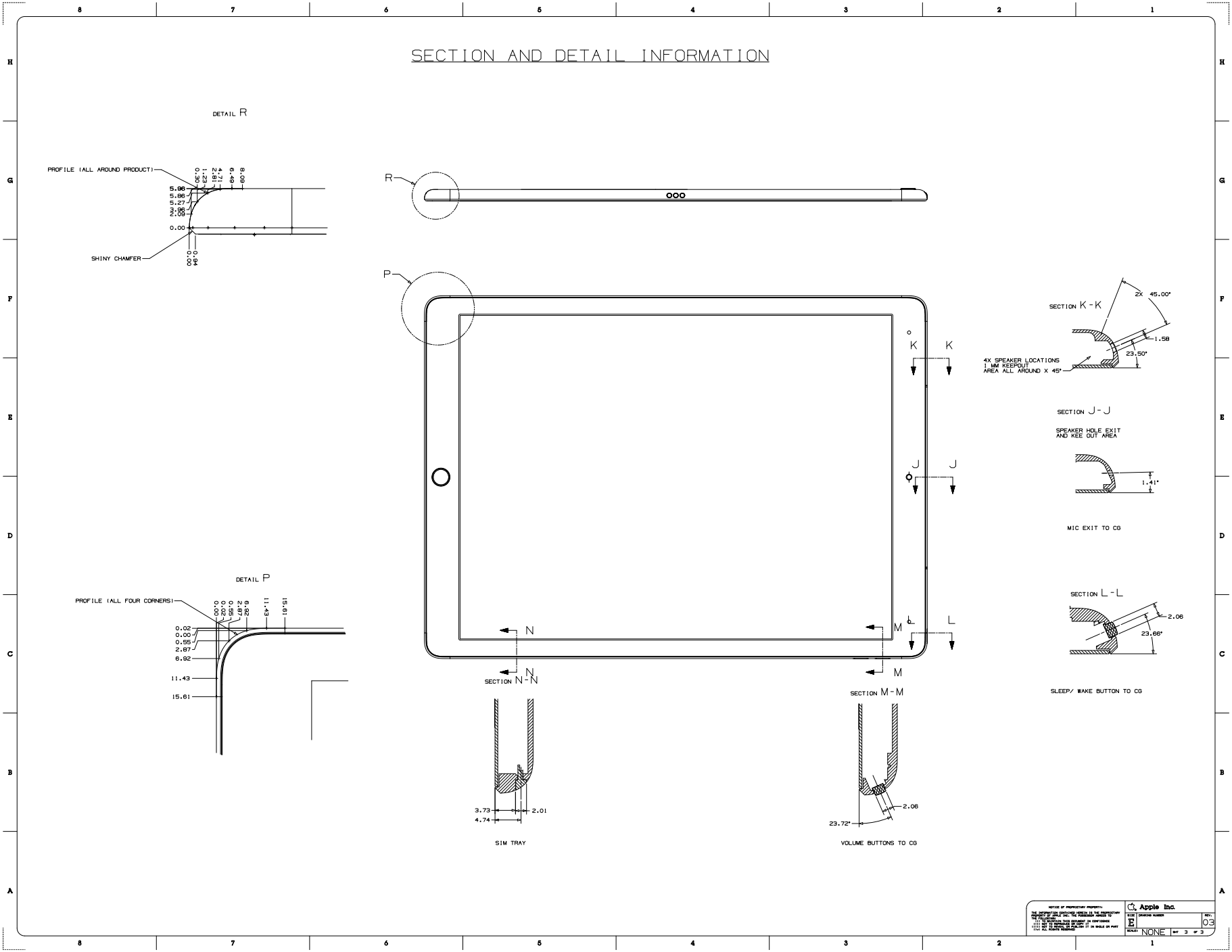

Copyright © 2023 Apple Inc. All Rights Reserved.

56.133 iPad Pro 10.5-inch with Wi-Fi

[中文]

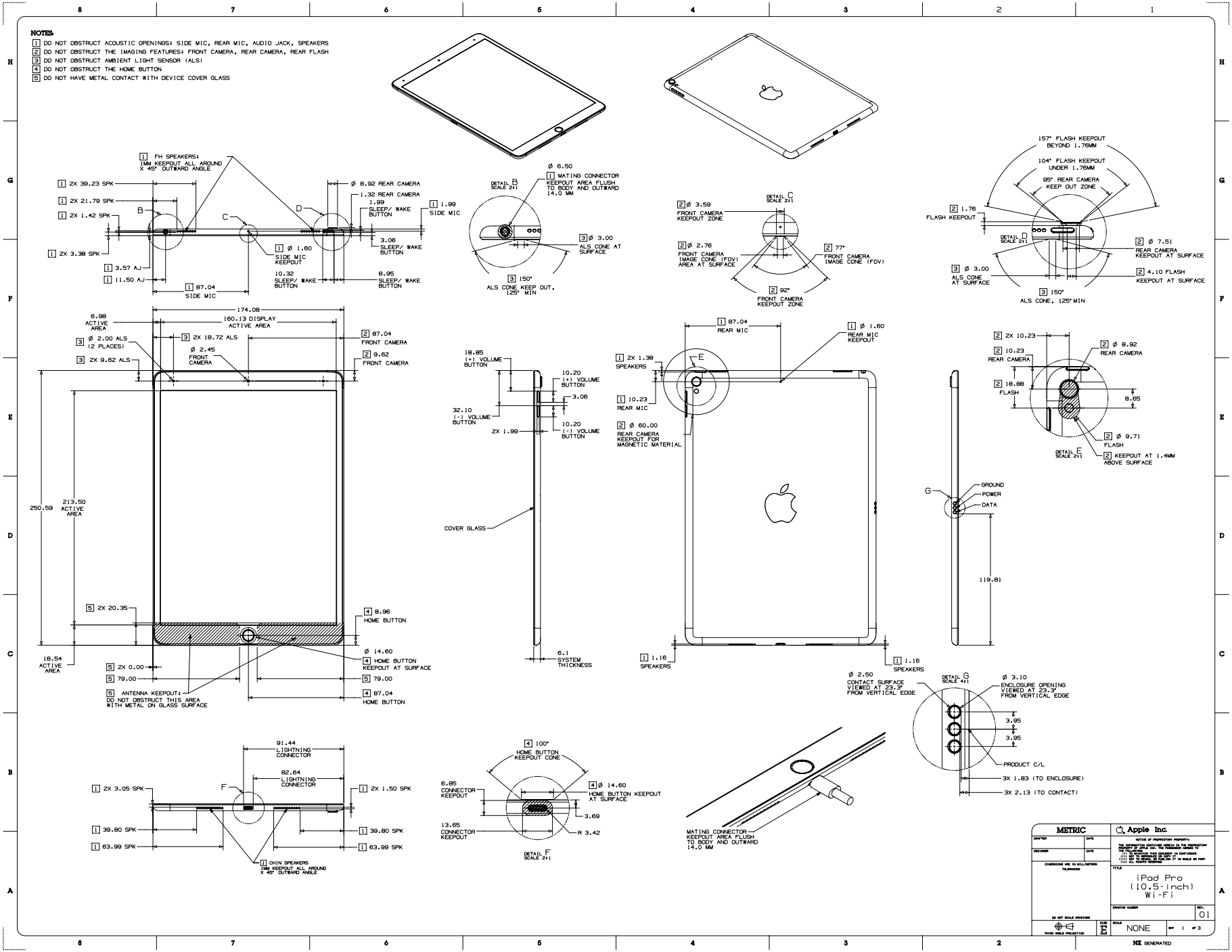

Copyright © 2023 Apple Inc. All Rights Reserved.

56.134 iPad Pro 10.5-inch with Wi-Fi + Cellular

[中文]

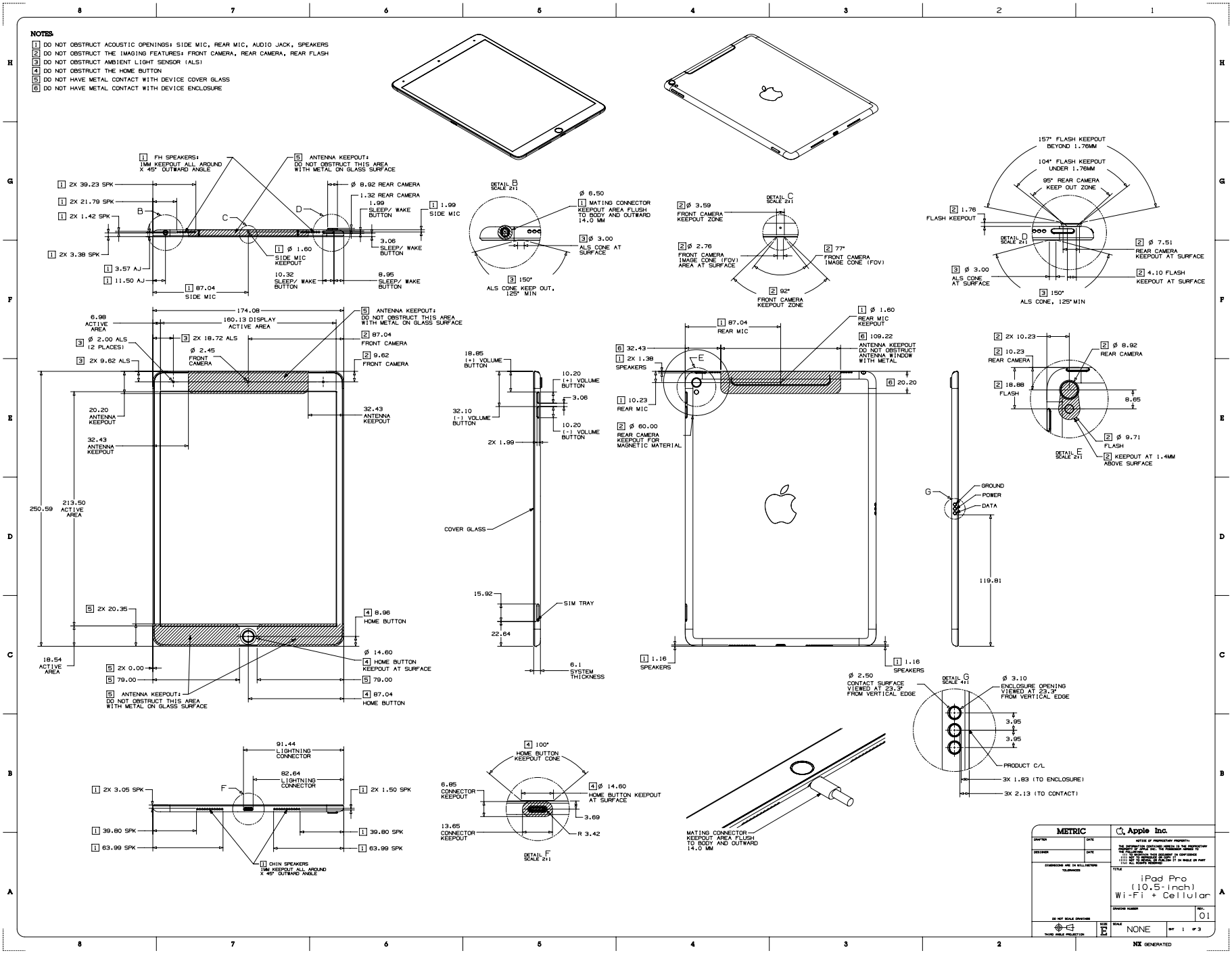

Copyright © 2023 Apple Inc. All Rights Reserved.

56.135 iPad Pro 10.5-inch Magnet/Hall Effect Sensors 1 of 2

[中文]

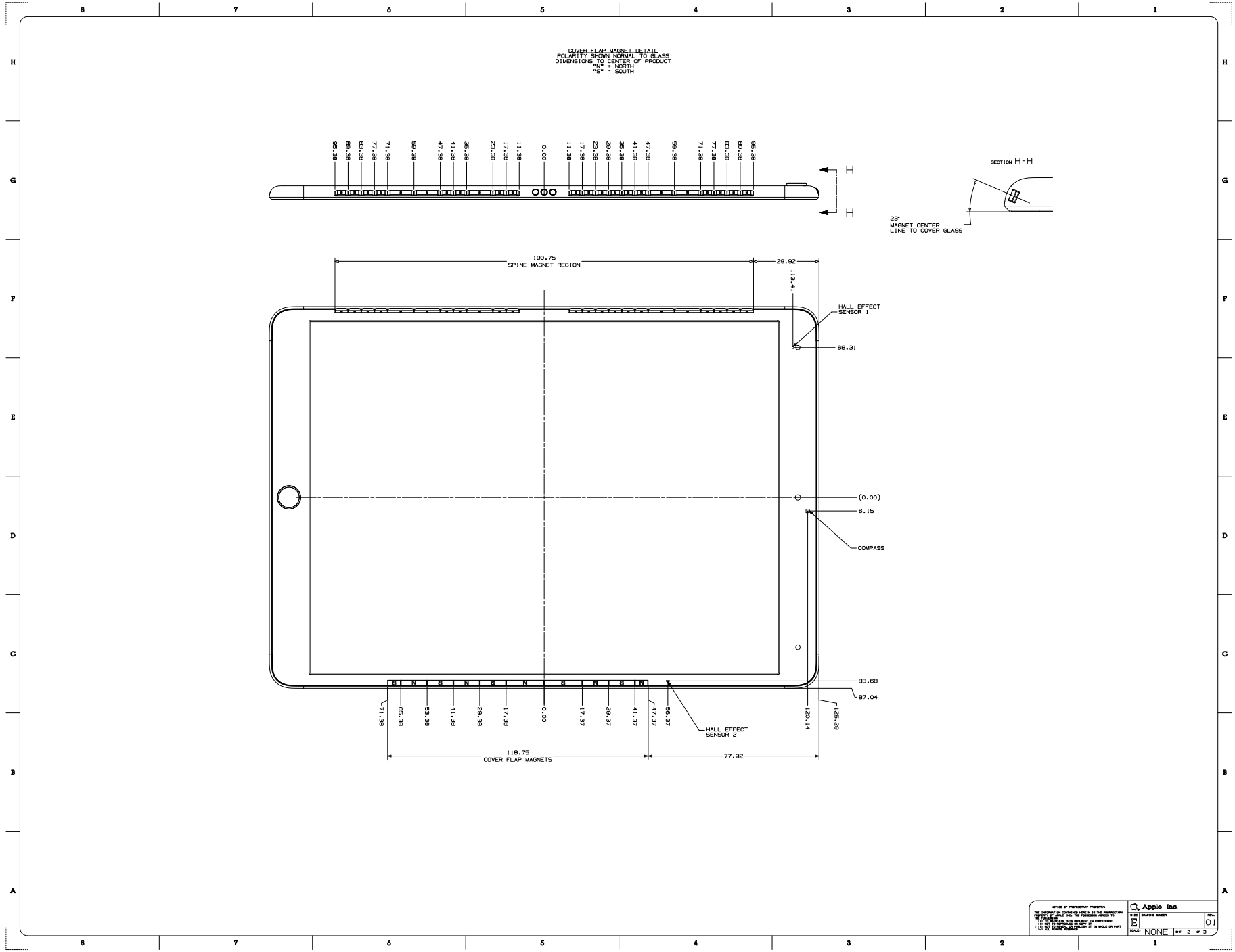

Copyright © 2023 Apple Inc. All Rights Reserved.

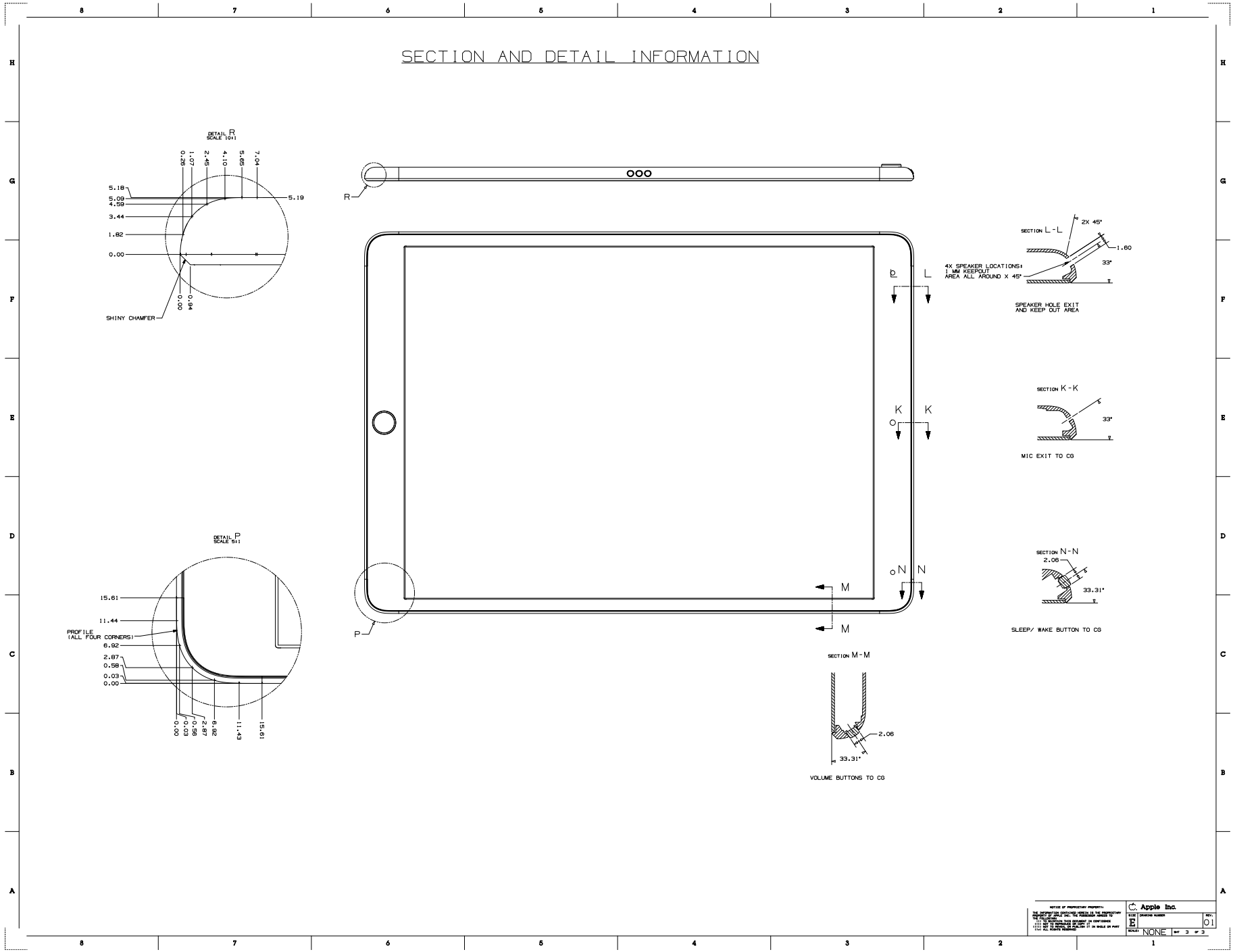
SECTION AND DETAIL INFORMATION
DETAIL R
SCALE 10:1
0.28
1.07
2.45
4.10
5.65
7.04
5.18
5.08
4.59
3.44
1.82
0.00
5.19
0.00
0.94
SHINY CHAMFER
R
P
L
L
K
K
N
N
M
M
4X SPEAKER LOCATIONS:
1 MM KEEPOUT
AREA ALL AROUND X 45°
SECTION L-L
2X 45°
1.60
33°
SPEAKER HOLE EXIT
AND KEEP OUT AREA
SECTION K-K
33°
MIC EXIT TO CG
SECTION N-N
2.06
33.31°
SLEEP/ WAKE BUTTON TO CG
DETAIL P
SCALE 5:1
15.61
11.44
PROFILE
(ALL FOUR CORNERS)
6.92
2.87
0.58
0.03
0.00
SECTION M-M
2.06
33.31°
VOLUME BUTTONS TO CG
Apple Inc.
NONE

56.137 iPad (5th and 6th generation) with Wi-Fi + Cellular

[中文]

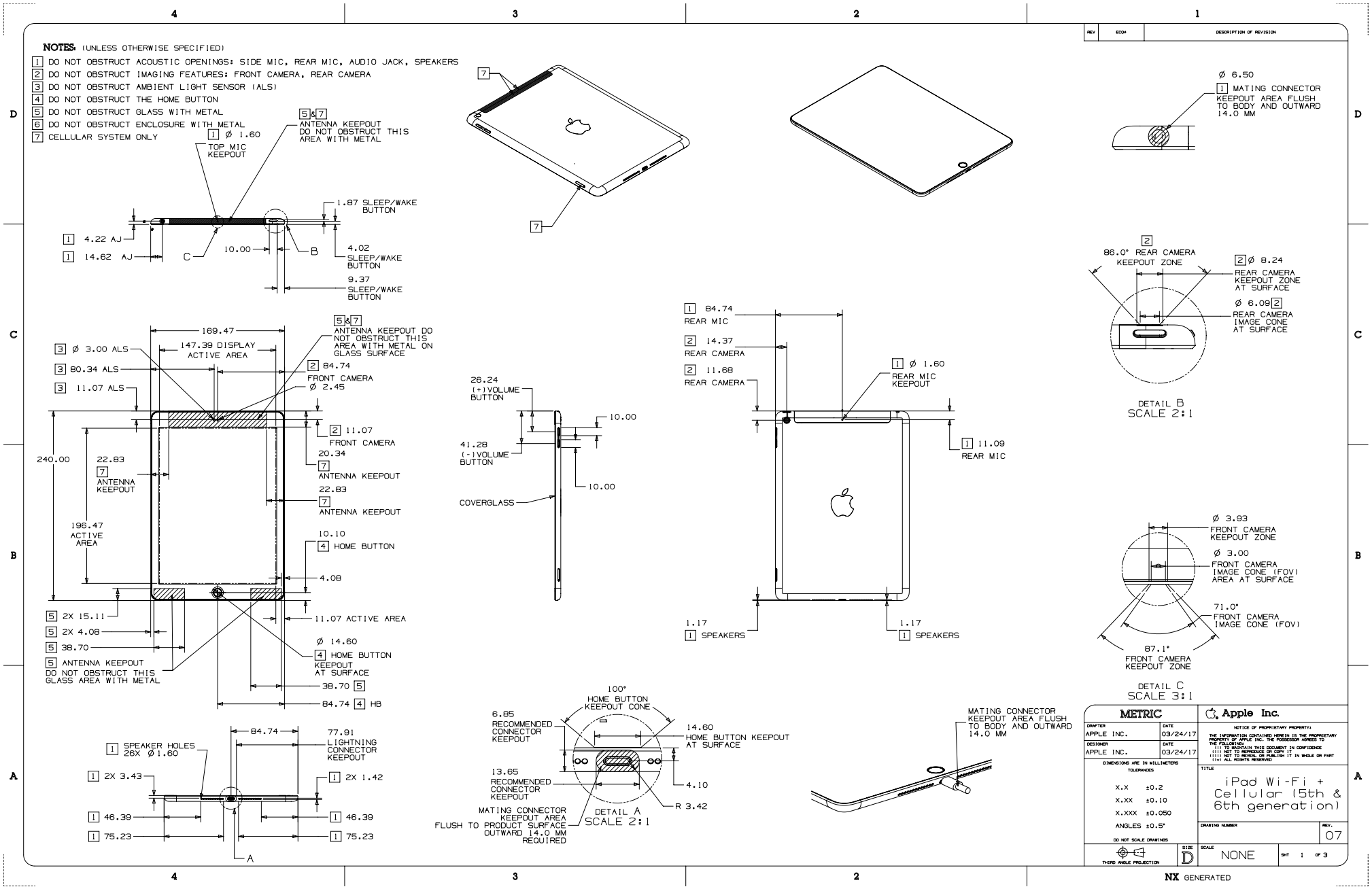

56.138 iPad (5th and 6th generation) Magnet/Hall Effect Sensors 1 of 2

[中文]

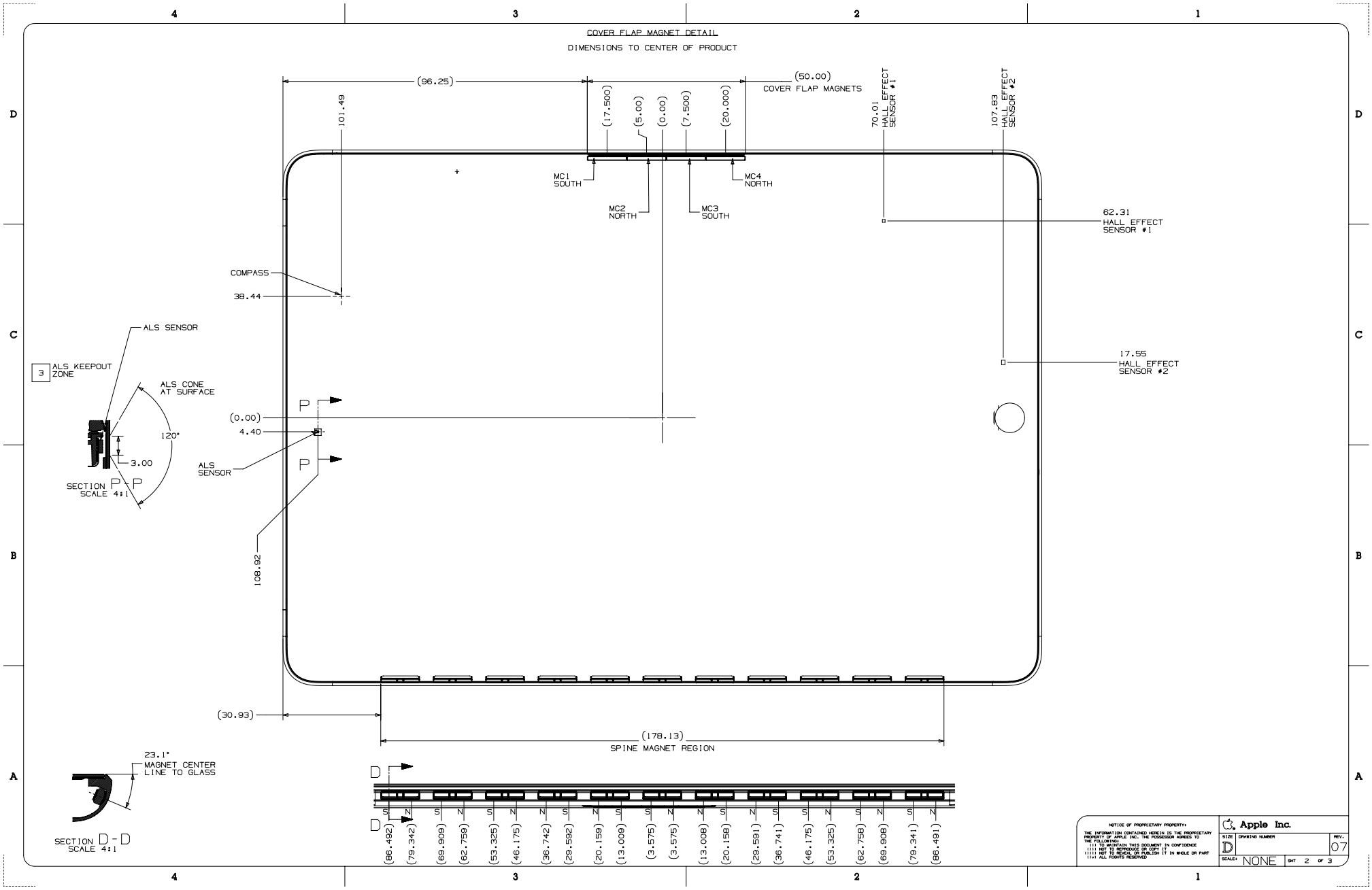

Copyright © 2023 Apple Inc. All Rights Reserved.

56.139 iPad (5th and 6th generation) Magnet/Hall Effect Sensors 2 of 2

[中文]

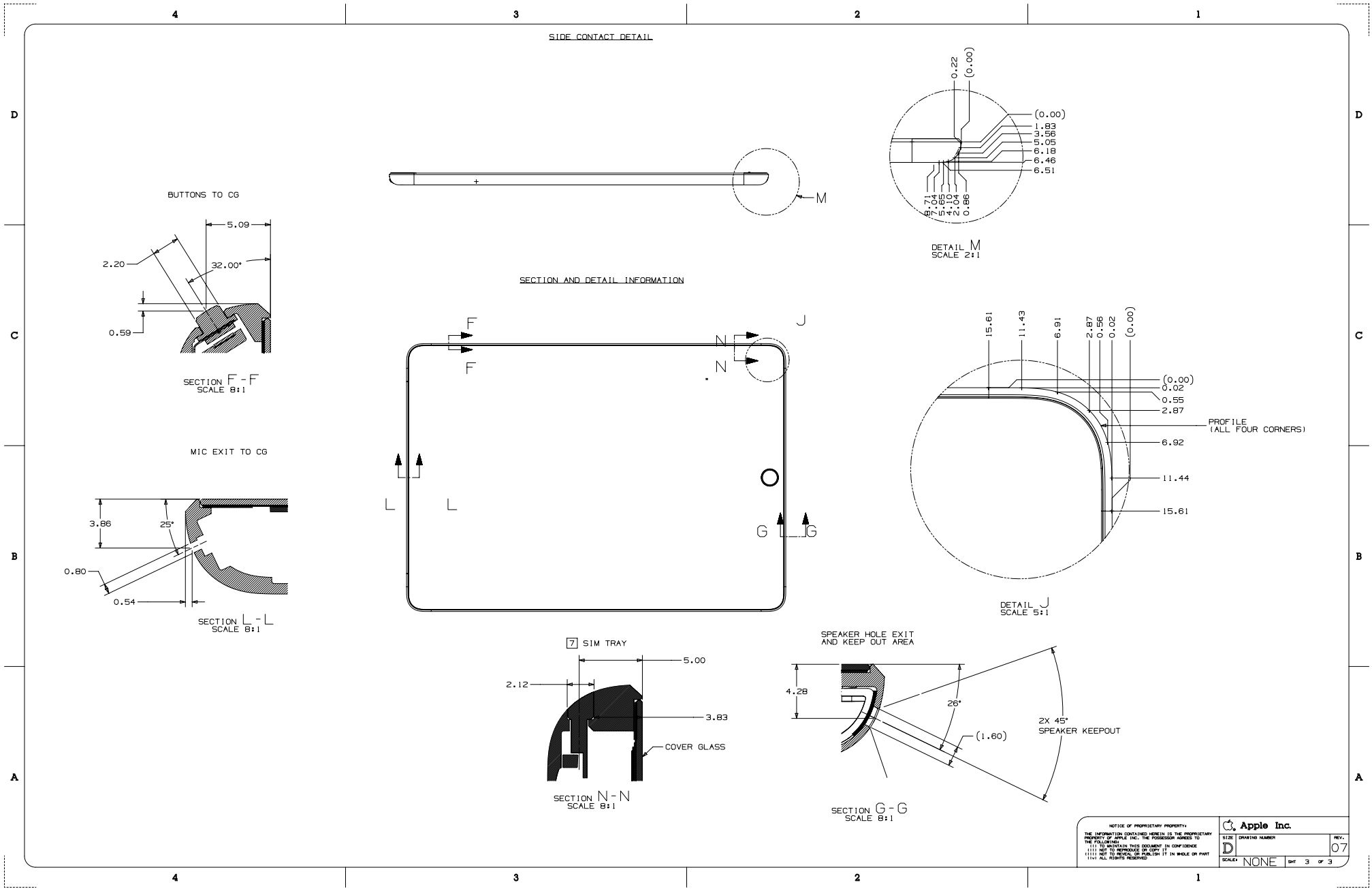

Copyright © 2023 Apple Inc. All Rights Reserved.

56.140 iPad Pro 9.7-inch with Wi-Fi

[中文]

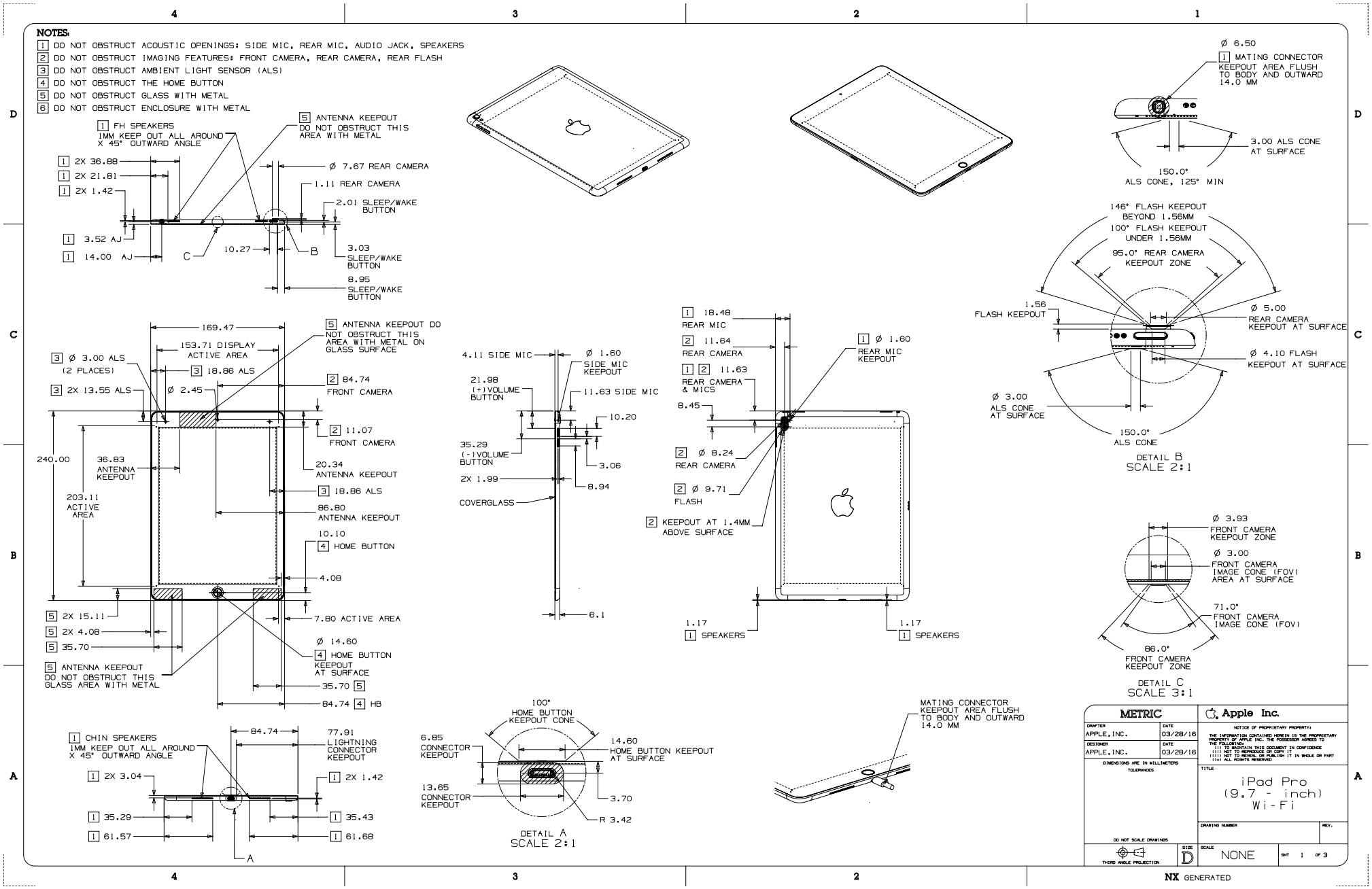

Copyright © 2023 Apple Inc. All Rights Reserved.

56.141 iPad Pro 9.7-inch with Wi-Fi + Cellular

[中文]

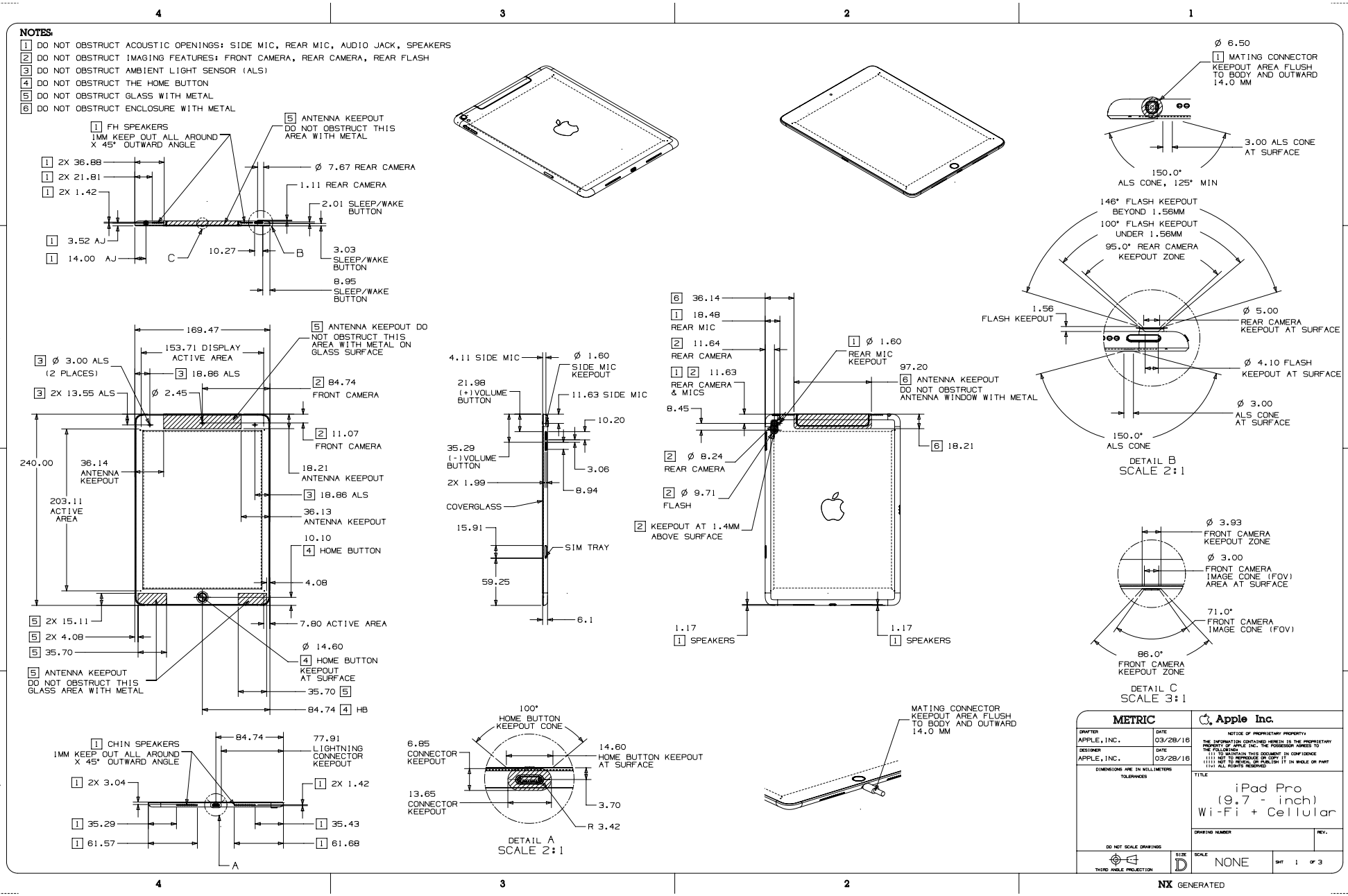

Copyright © 2023 Apple Inc. All Rights Reserved.

56.142 iPad Pro 9.7-inch Magnet/Hall Effect Sensors 1 of 2

[中文]

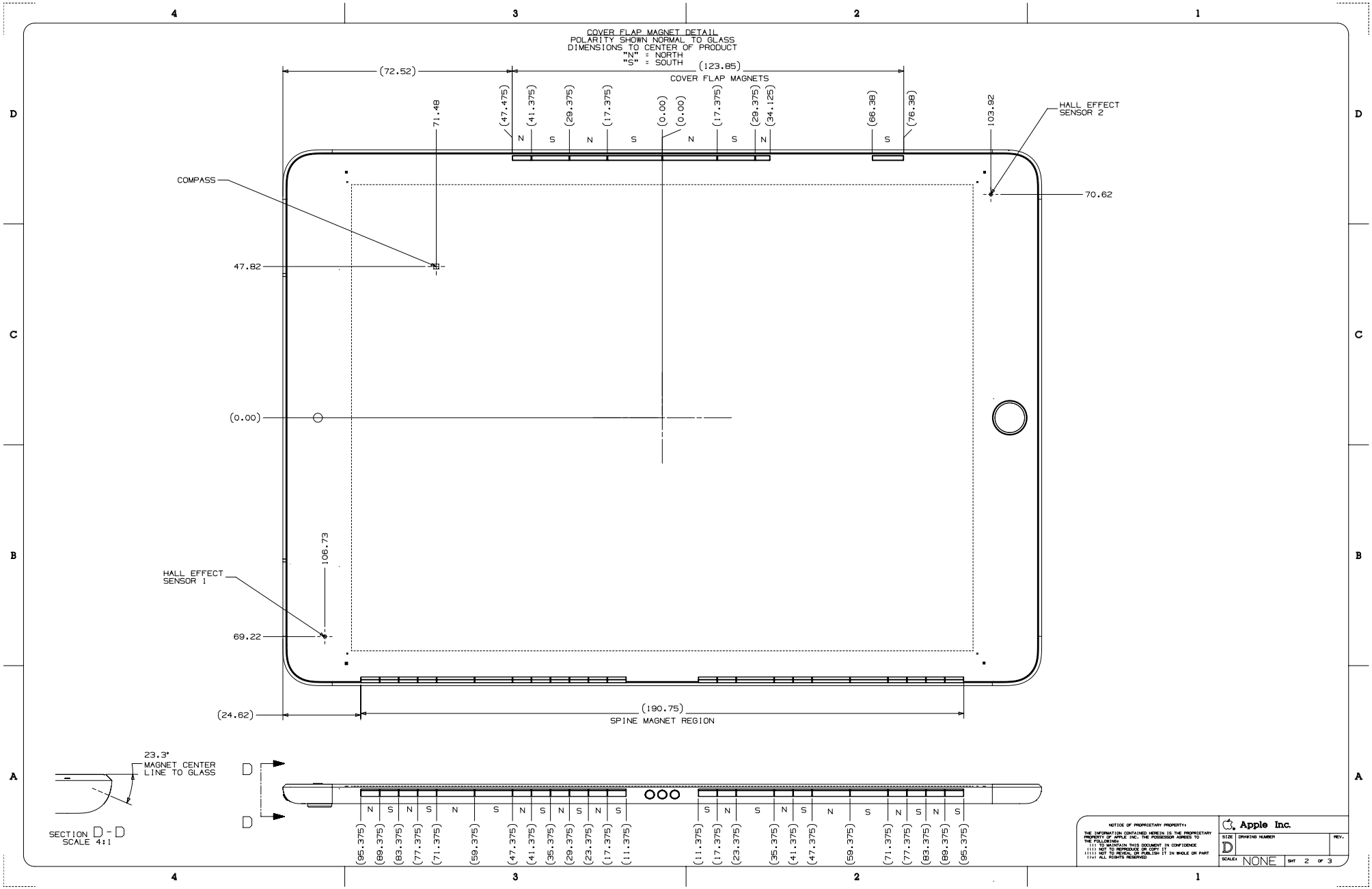

Copyright © 2023 Apple Inc. All Rights Reserved.

56.143 iPad Pro 9.7-inch Magnet/Hall Effect Sensors 2 of 2

[中文]

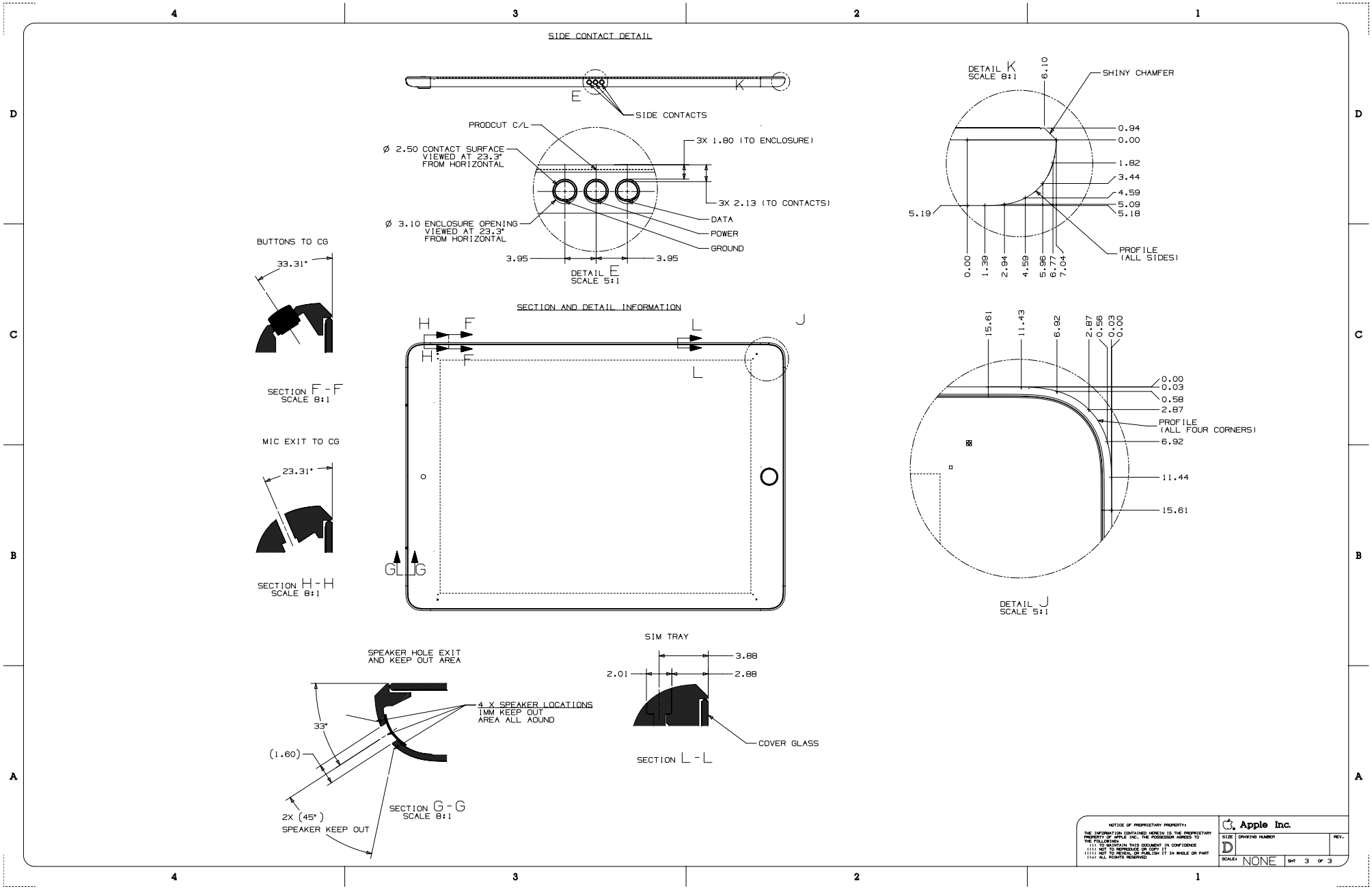

56.144 iPad Pro 12.9-inch (1st generation) with Wi-Fi

[中文]

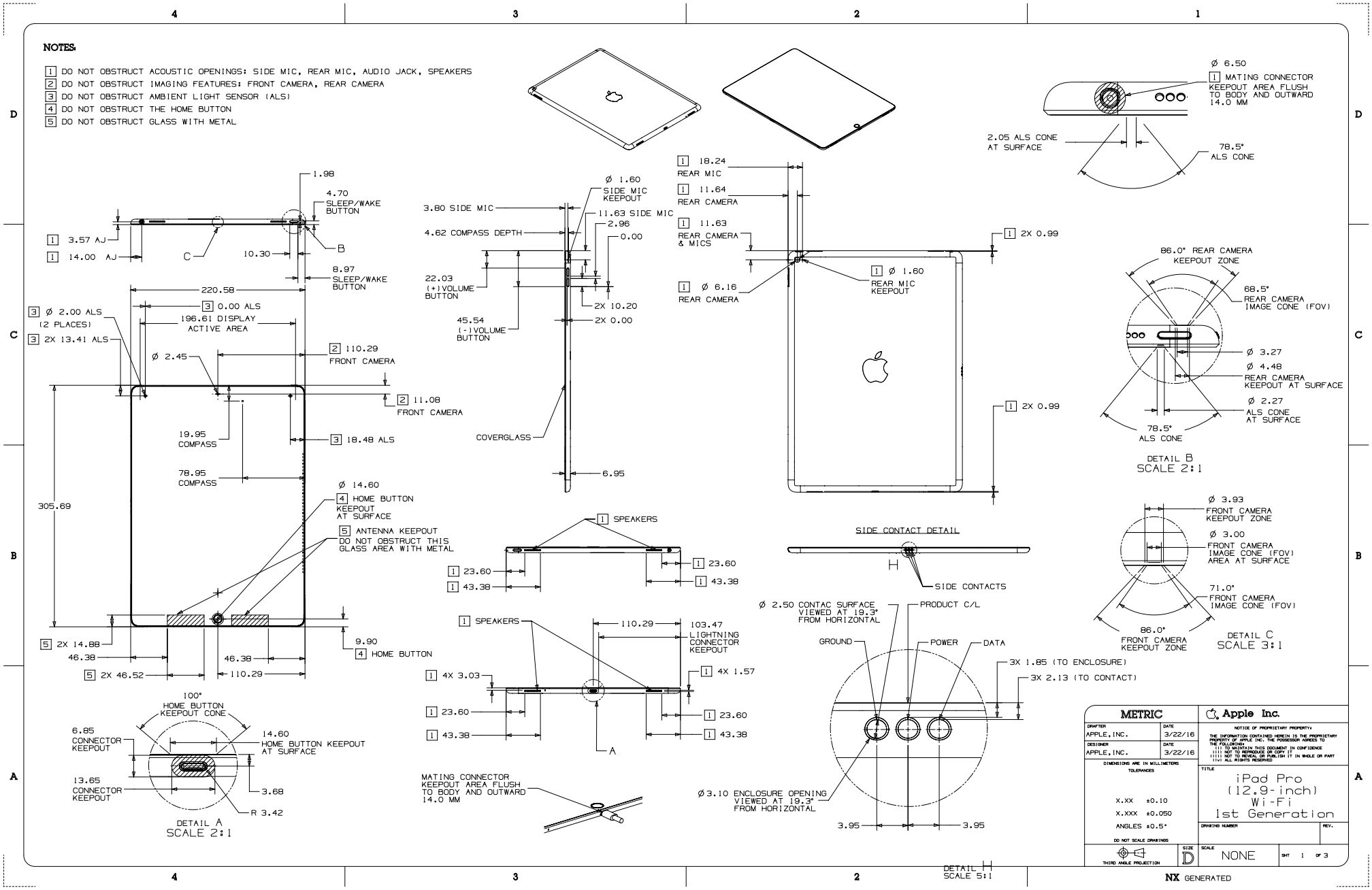

Copyright © 2023 Apple Inc. All Rights Reserved.

56.145 iPad Pro 12.9-inch (1st generation) with Wi-Fi + Cellular

[中文]

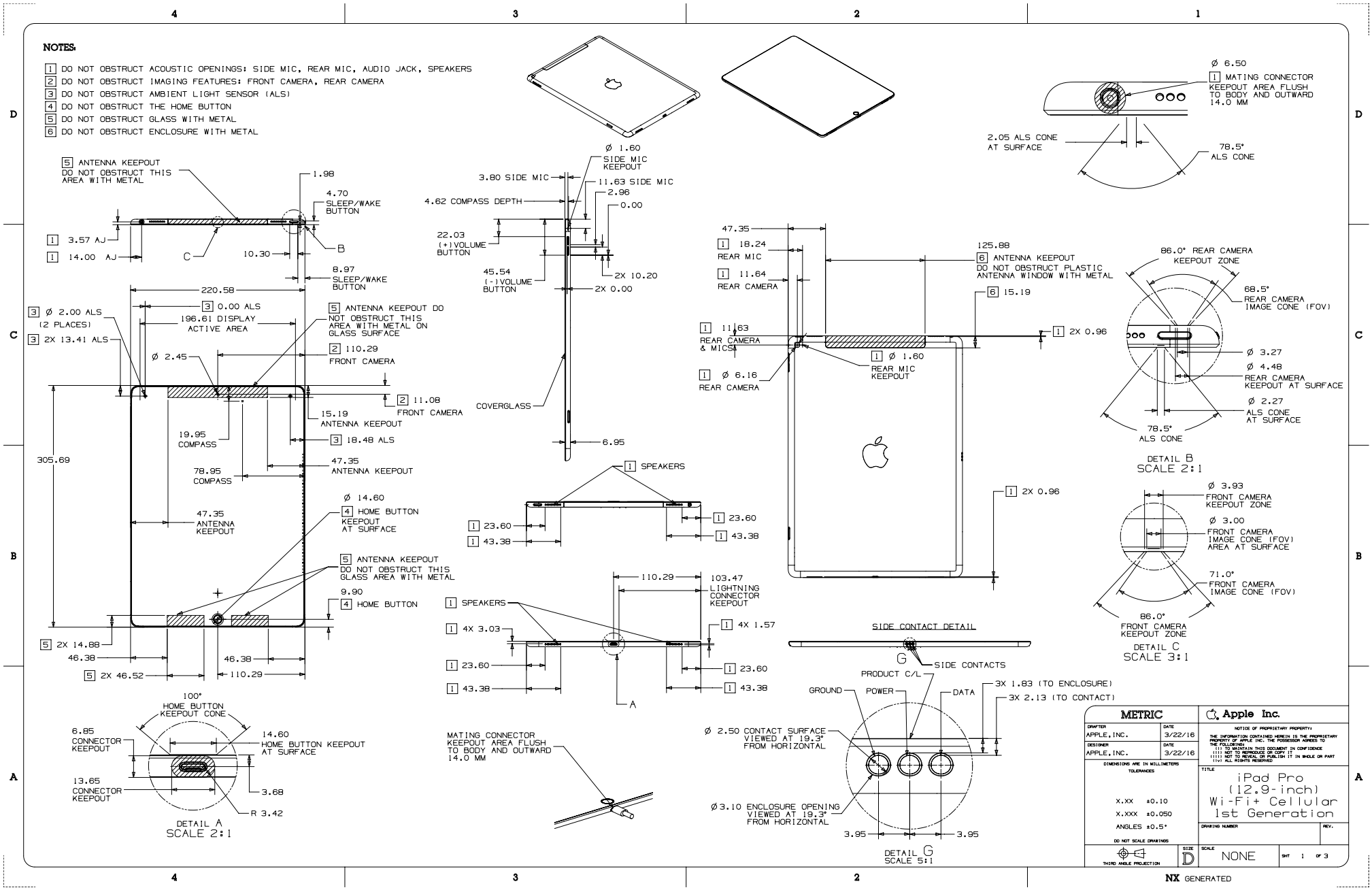

56.146 iPad Pro 12.9-inch (1st generation) Magnet/Hall Effect Sensors 1 of 2

[中文]

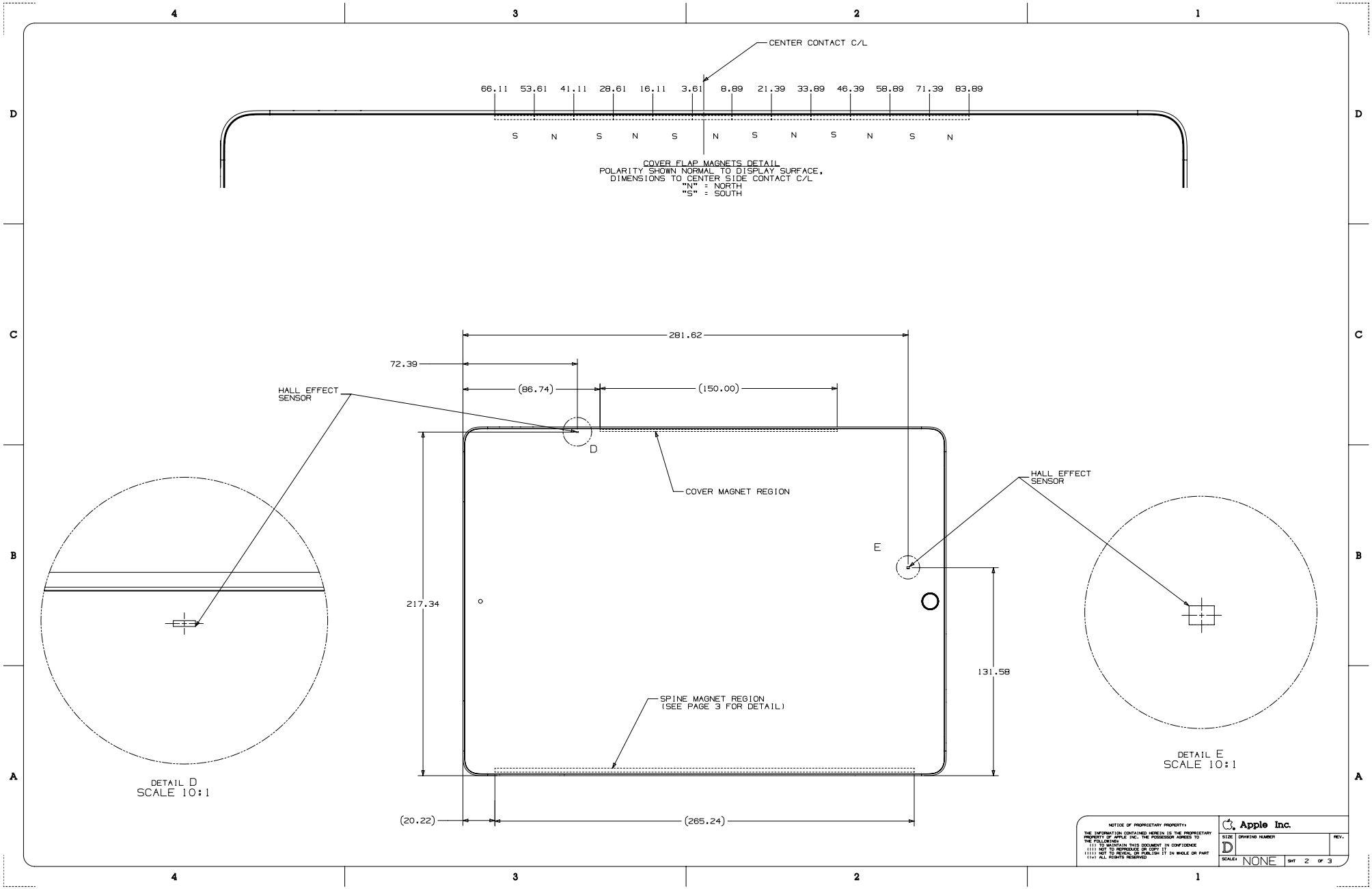

Copyright © 2023 Apple Inc. All Rights Reserved.

56.147 iPad Pro 12.9-inch (1st generation) Magnet/Hall Effect Sensors 2 of 2

[中文]

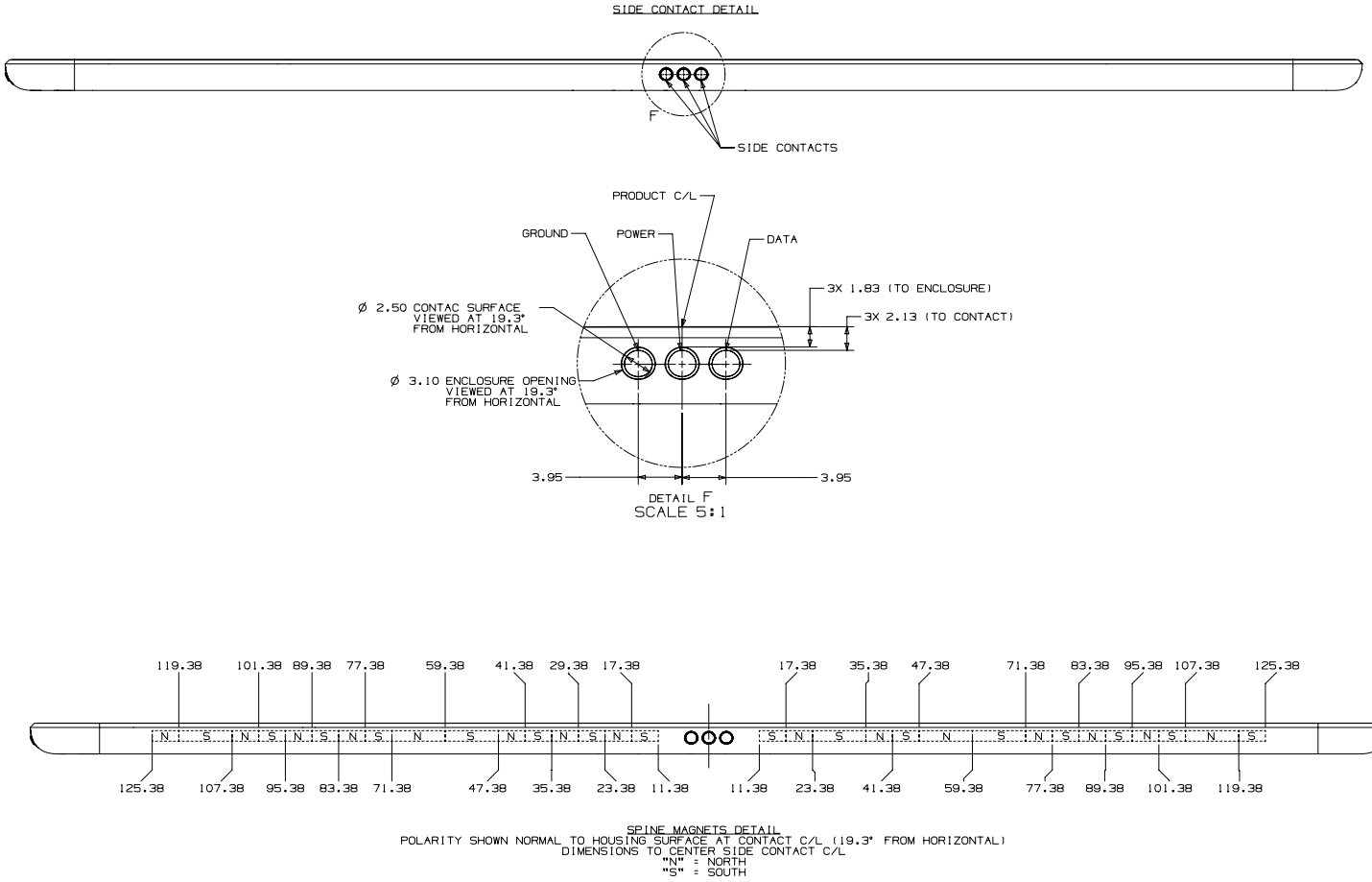

NOTICE OF PROPRIETARY PROPERTY:
THE INFORMATION CONTAINED HEREIN IS THE PROPRIETARY PROPERTY OF APPLE INC. THE POSSESSOR AGREES TO THE FOLLOWING:
(i) TO MAINTAIN THIS DOCUMENT IN CONFIDENCE
(ii) NOT TO REPRODUCE OR COPY IT
(iii) NOT TO REVEAL OR PUBLISH IT IN WHOLE OR PART
(iv) ALL RIGHTS RESERVED

Apple Inc.
SIZE D | DRAWING NUMBER | REV.
SCALE: NONE | SHT 3 OF 3

56.148 iPad mini 4 with Wi-Fi

[中文]

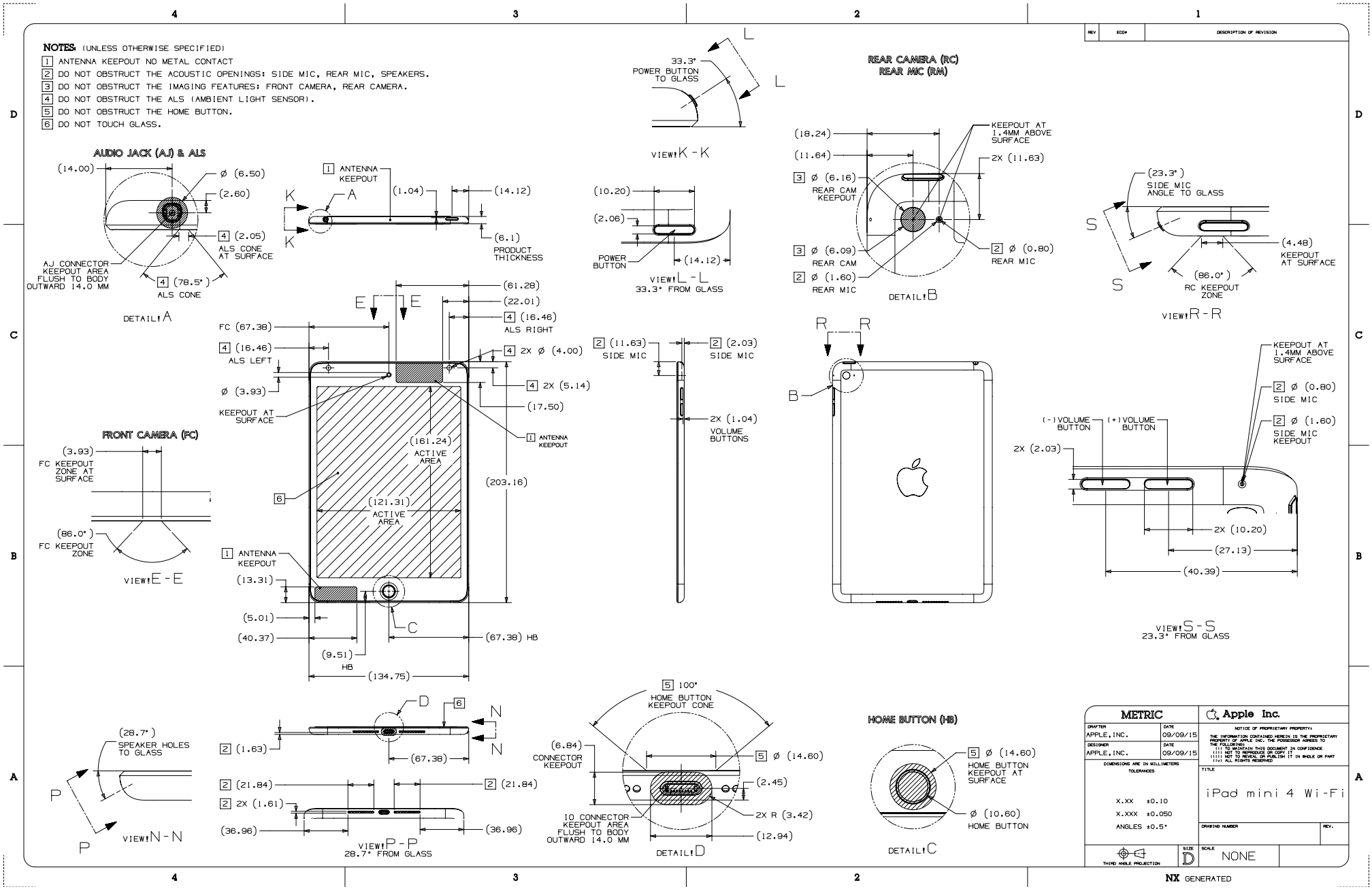

Copyright © 2023 Apple Inc. All Rights Reserved.

56.149 iPad mini 4 with Wi-Fi + Cellular

[中文]

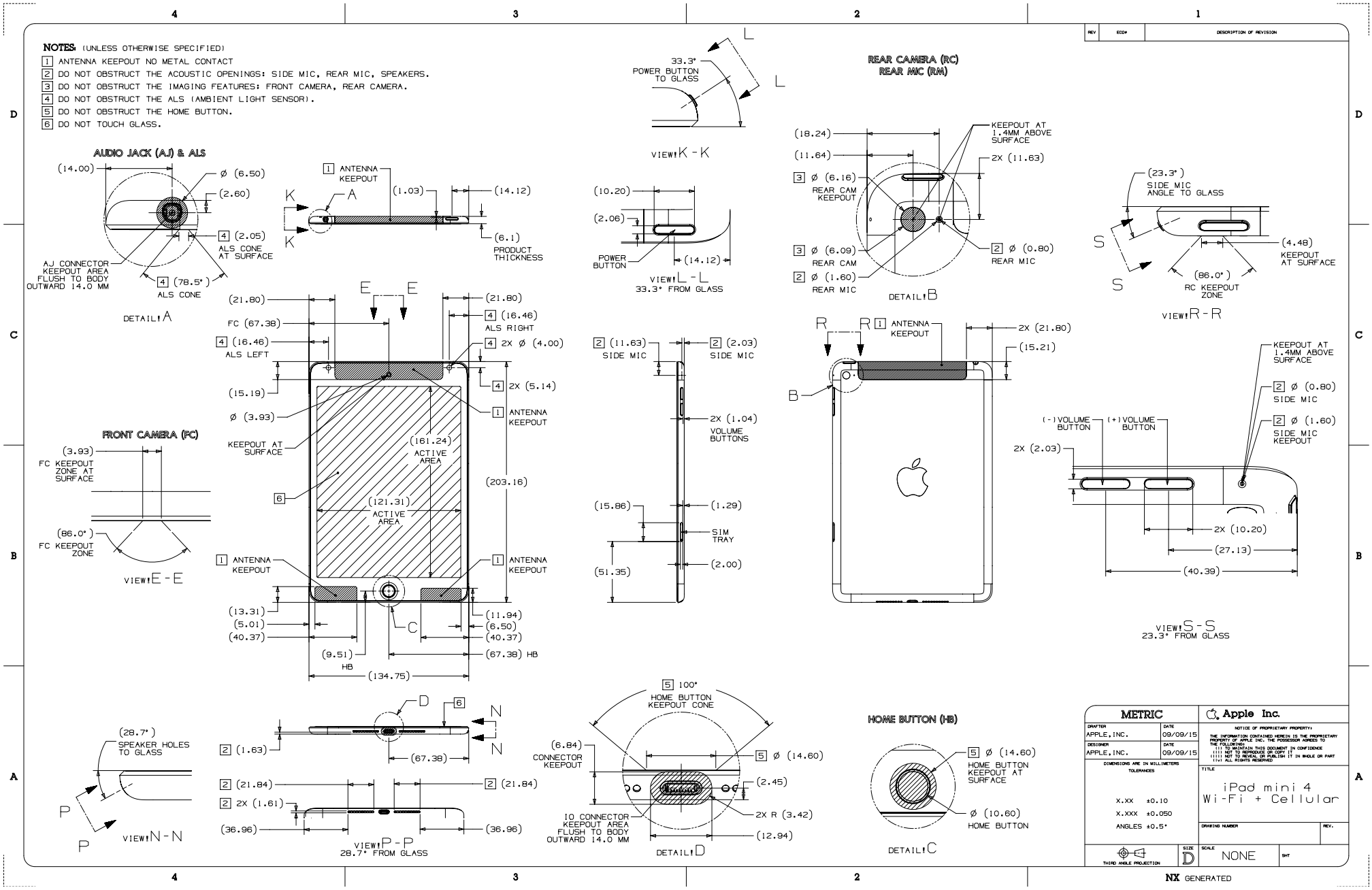

Copyright © 2023 Apple Inc. All Rights Reserved.

56.150 iPad mini 4 Magnet/Hall Effect Sensors

[中文]

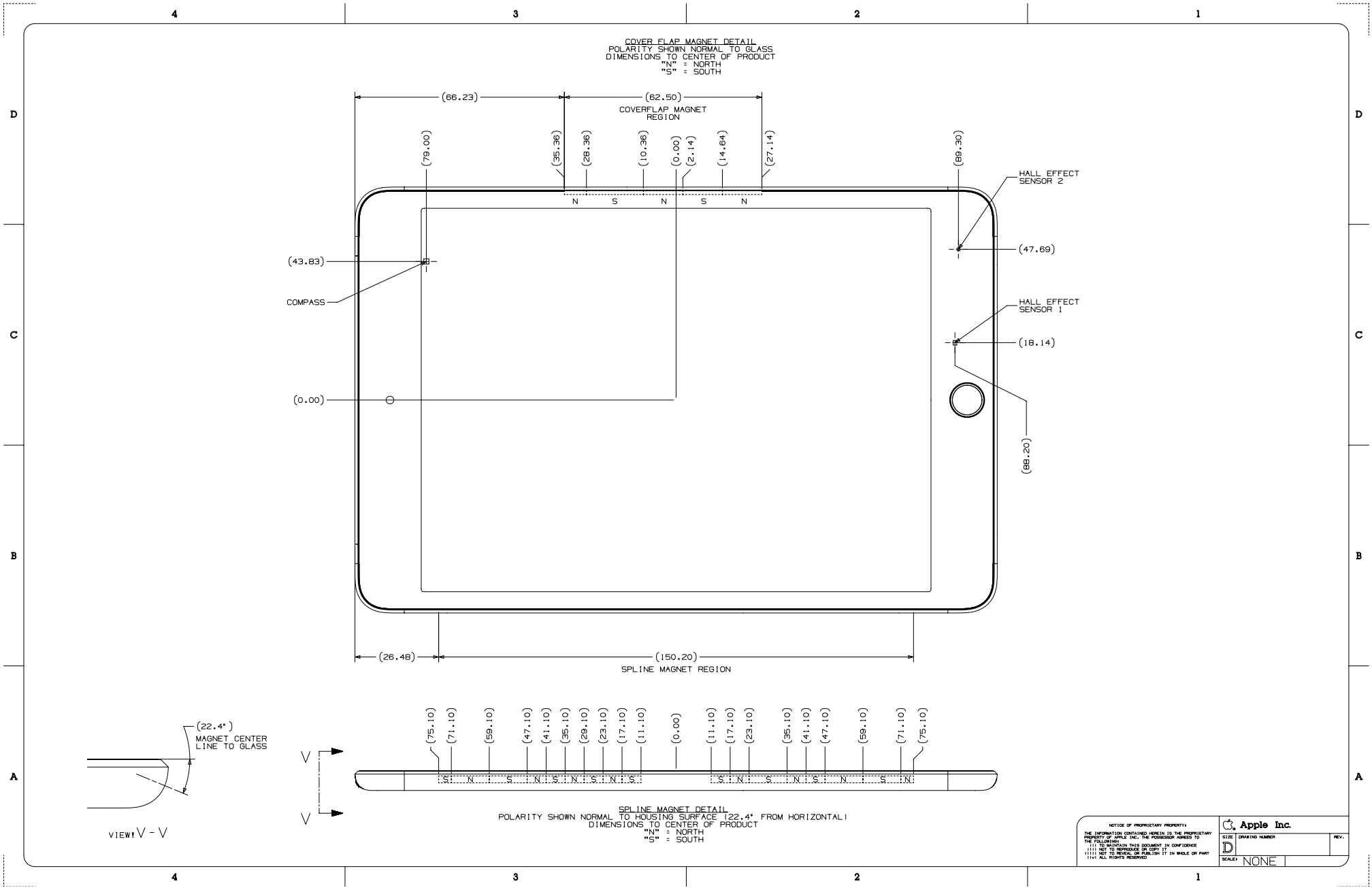

Copyright © 2023 Apple Inc. All Rights Reserved.

56.151 iPad Air 2 with Wi-Fi

[中文]

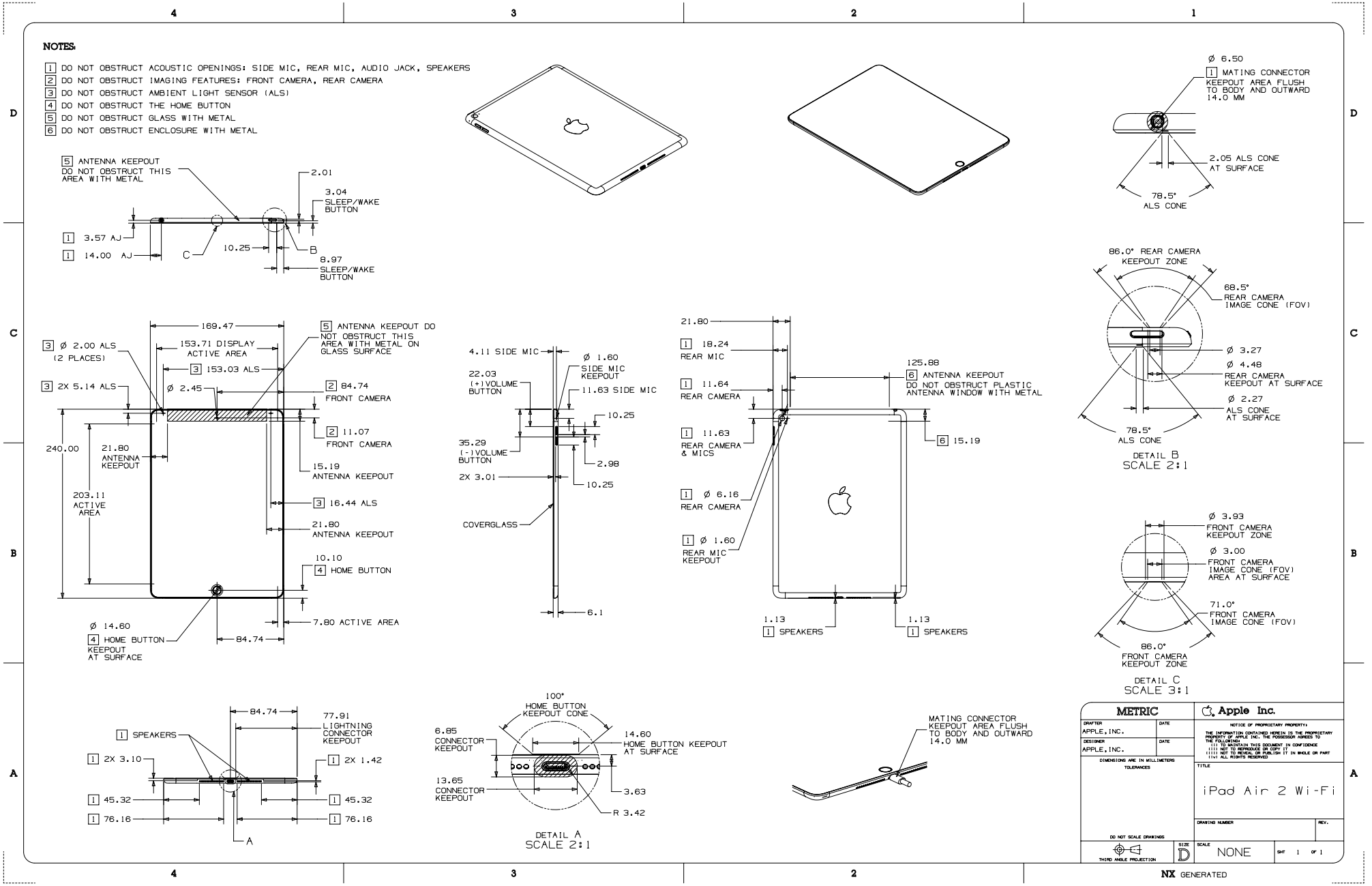

Copyright © 2023 Apple Inc. All Rights Reserved.

56.152 iPad Air 2 with Wi-Fi + Cellular

[中文]

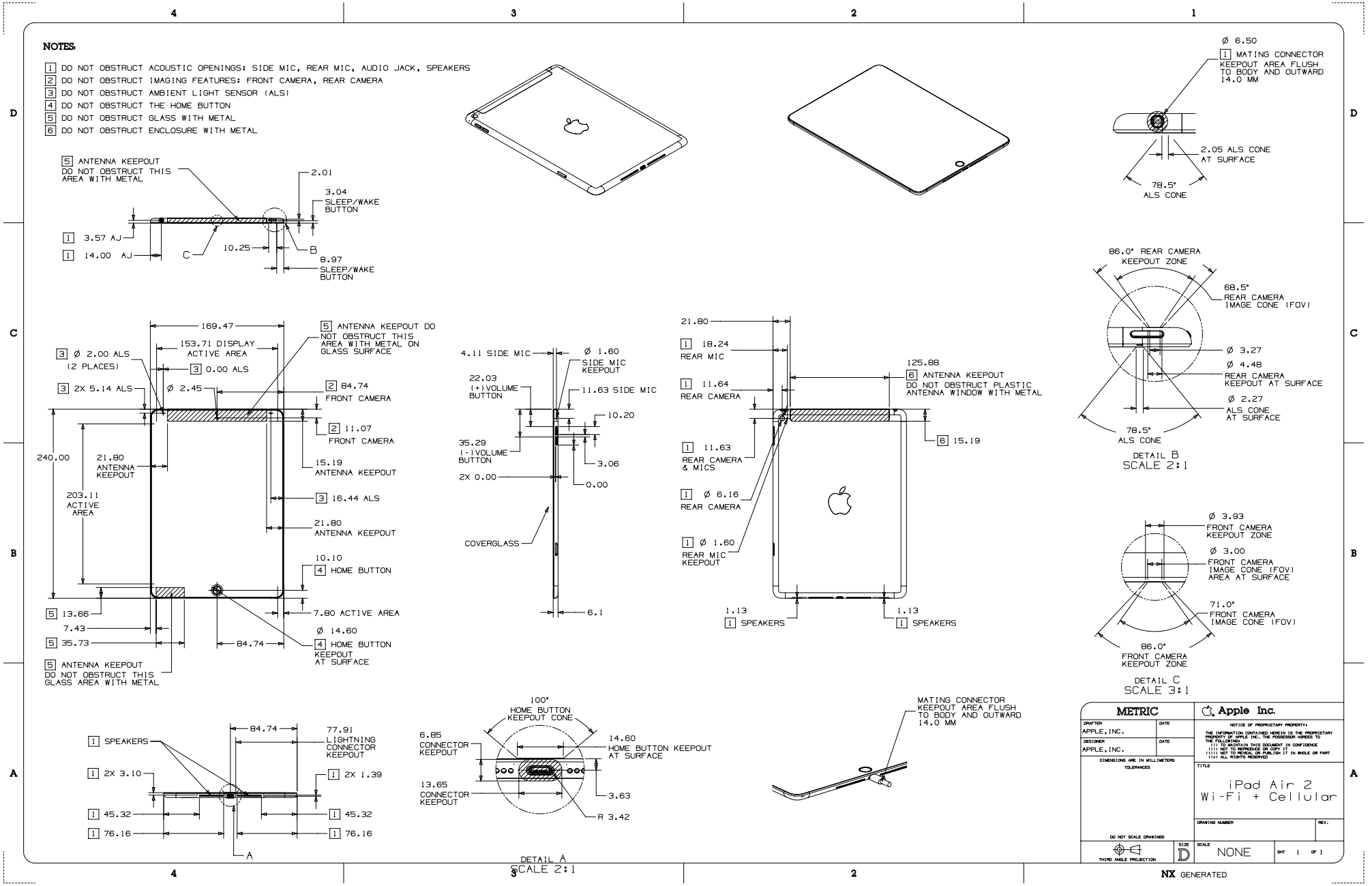

Copyright © 2023 Apple Inc. All Rights Reserved.

56.153 iPad mini 2 and iPad mini 3 with Wi-Fi

[中文]

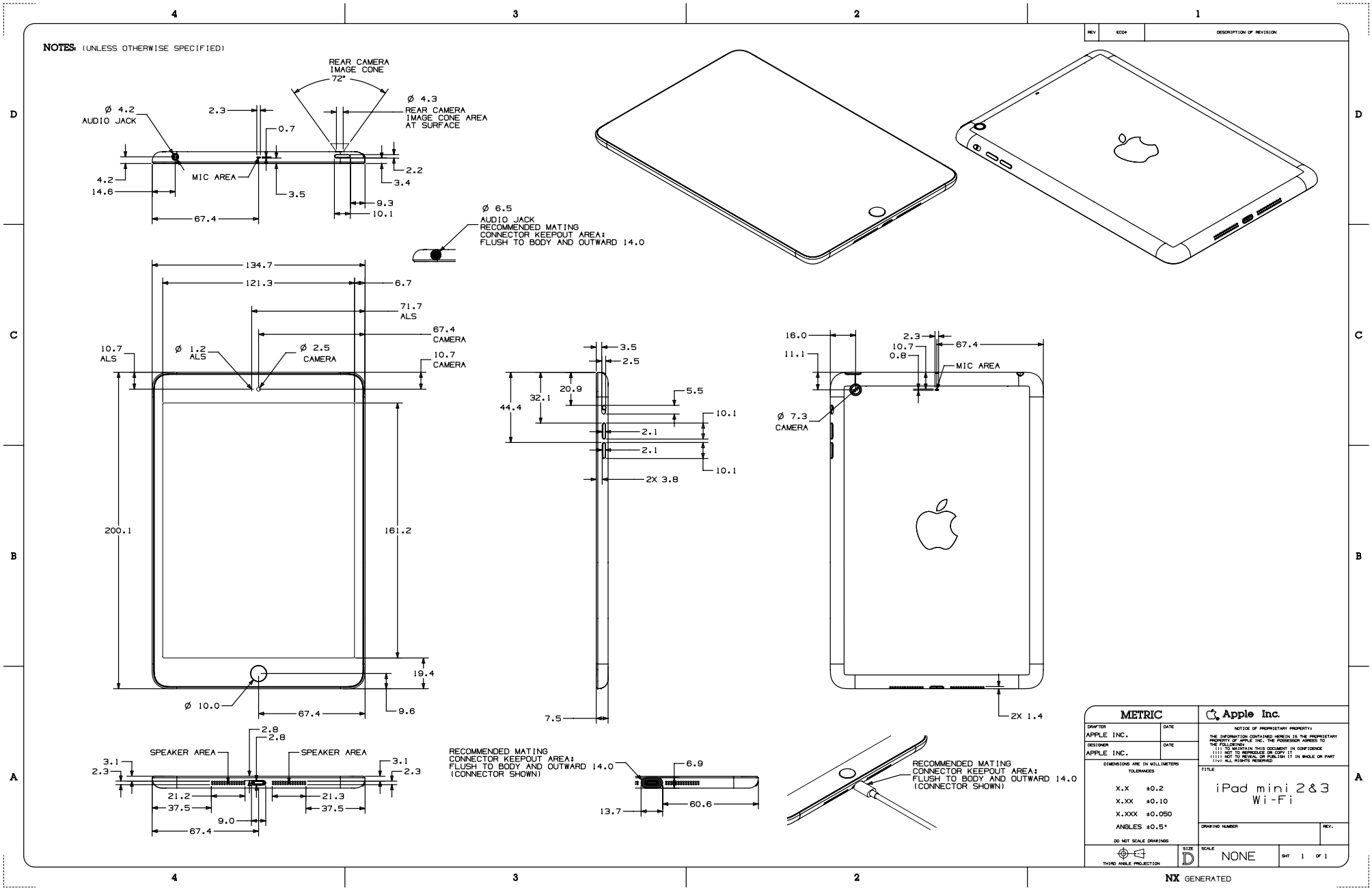

Copyright © 2023 Apple Inc. All Rights Reserved.

56.154 iPad mini 2 and iPad mini 3 with Wi-Fi + Cellular

[中文]

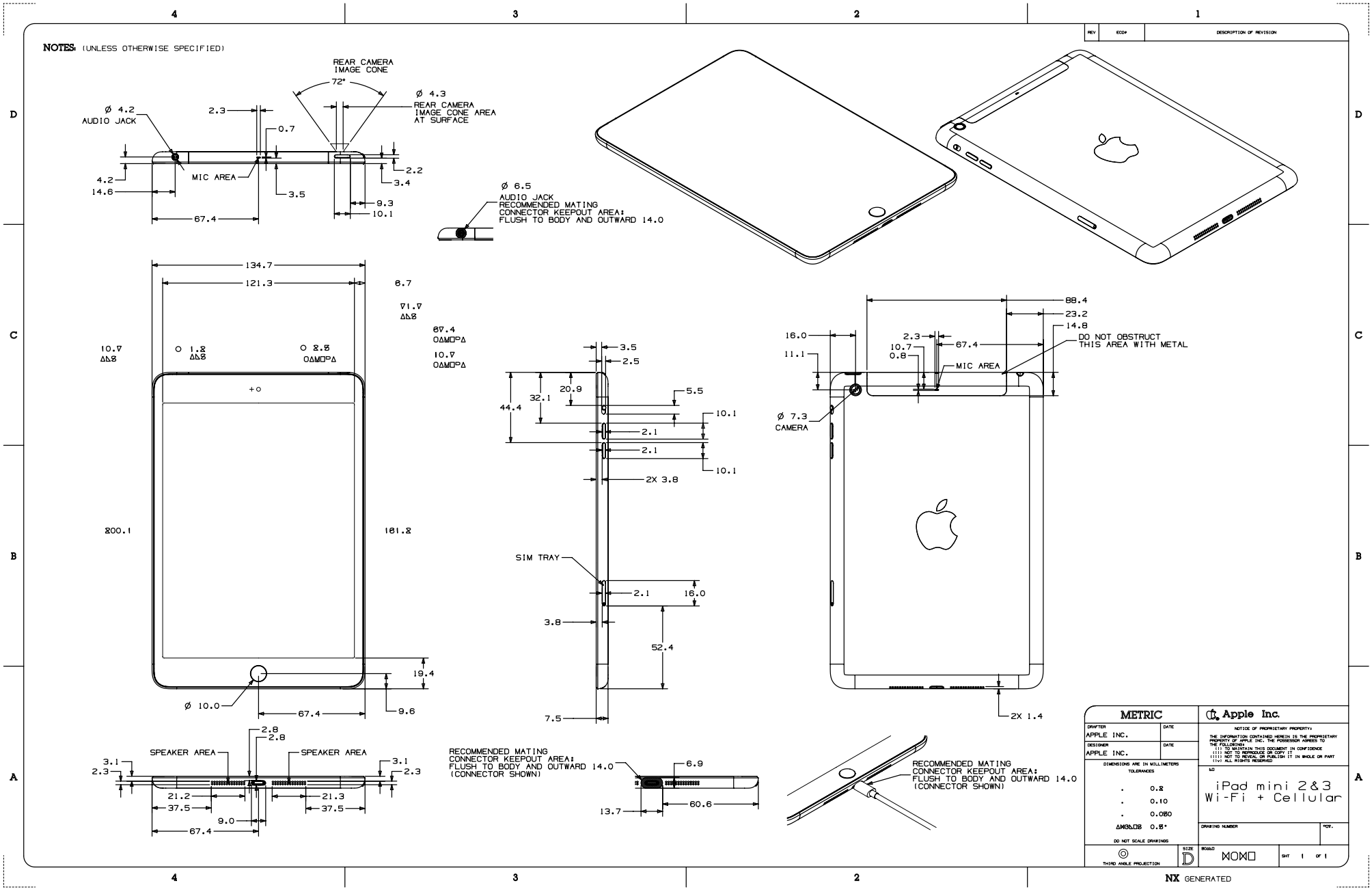

56.155 iPad Air with Wi-Fi

[中文]

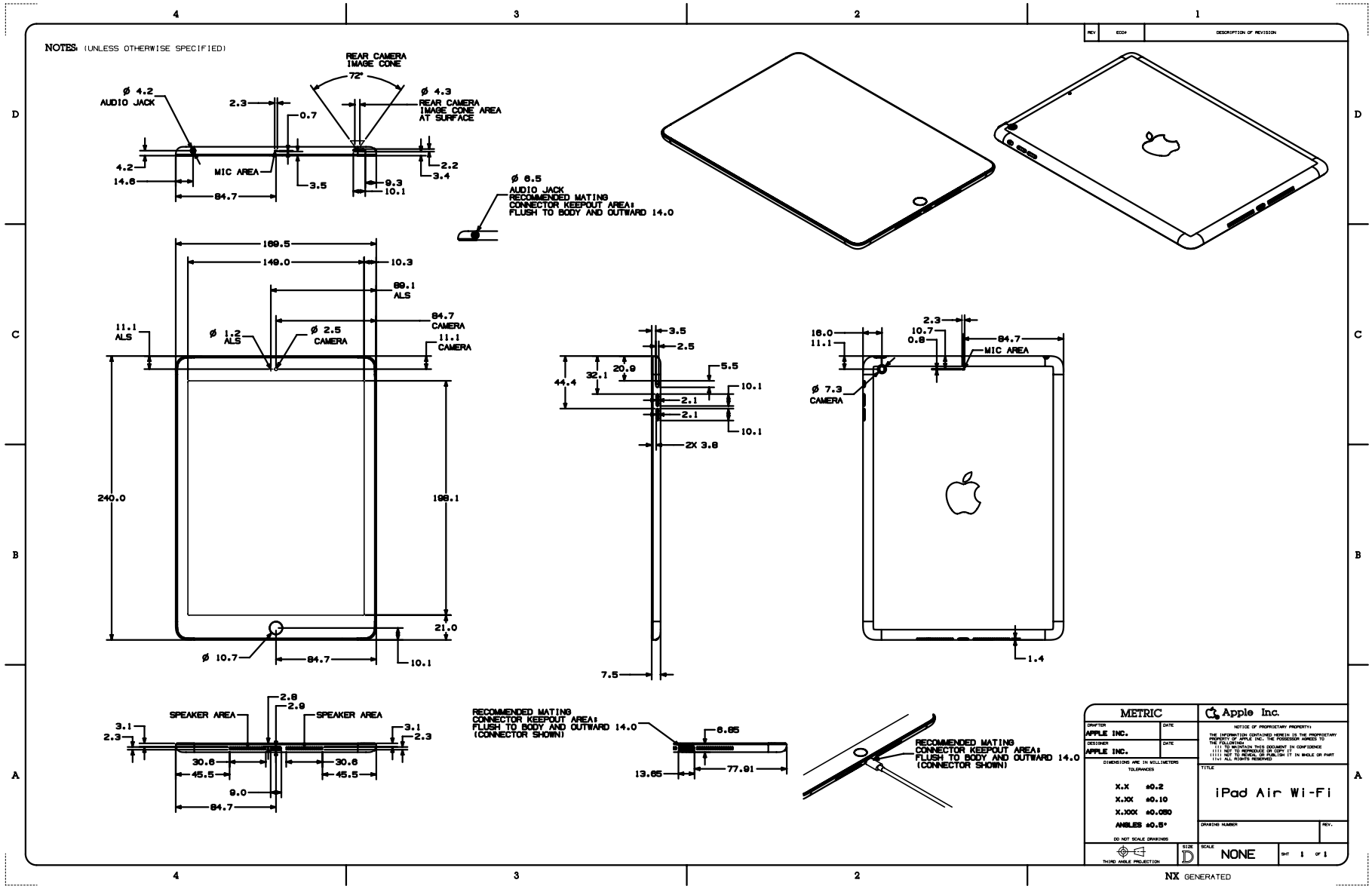

Copyright © 2023 Apple Inc. All Rights Reserved.

56.156 iPad Air with Wi-Fi + Cellular

[中文]

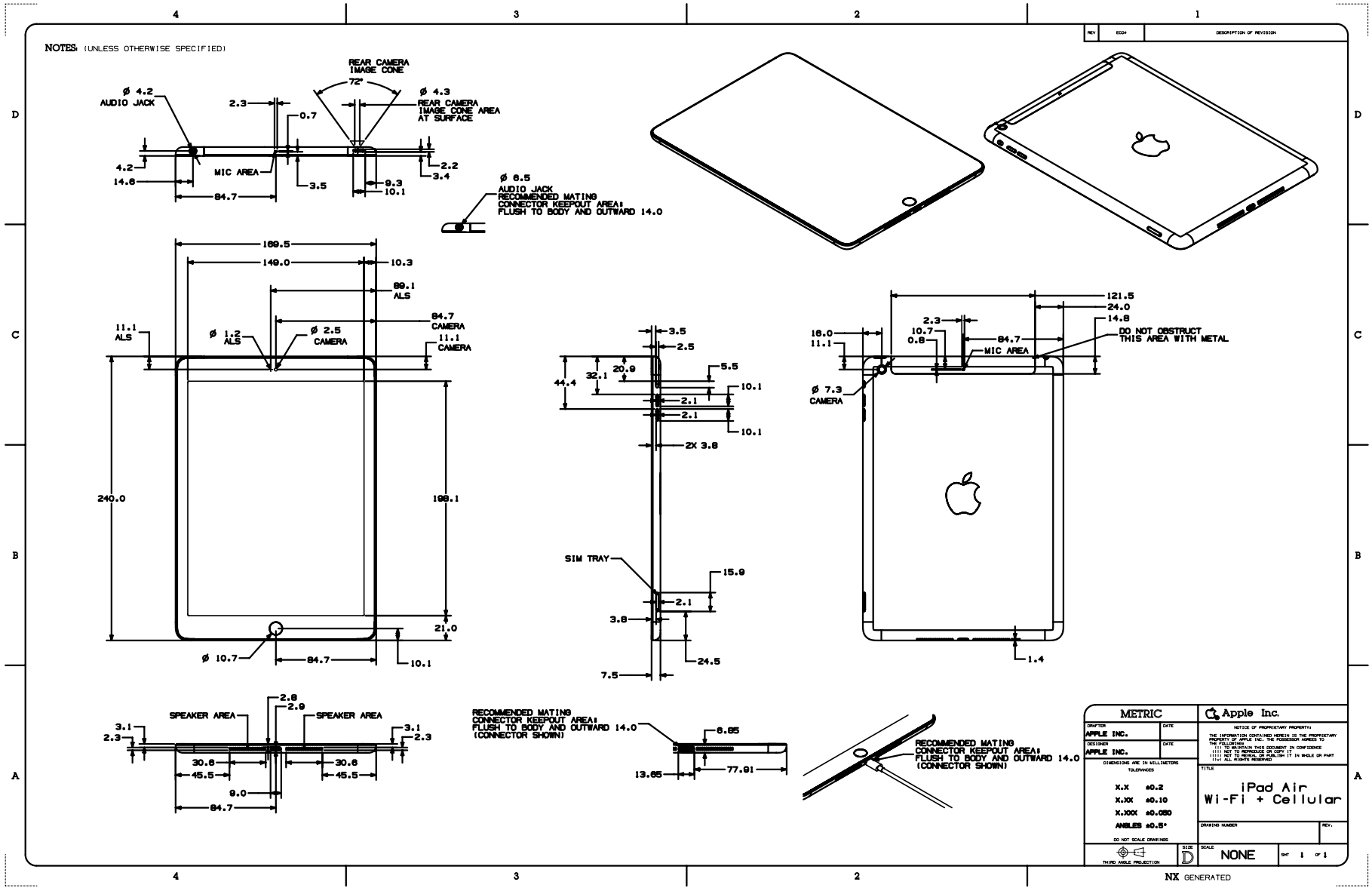

Copyright © 2023 Apple Inc. All Rights Reserved.

56.157 iPad mini with Wi-Fi

[中文]

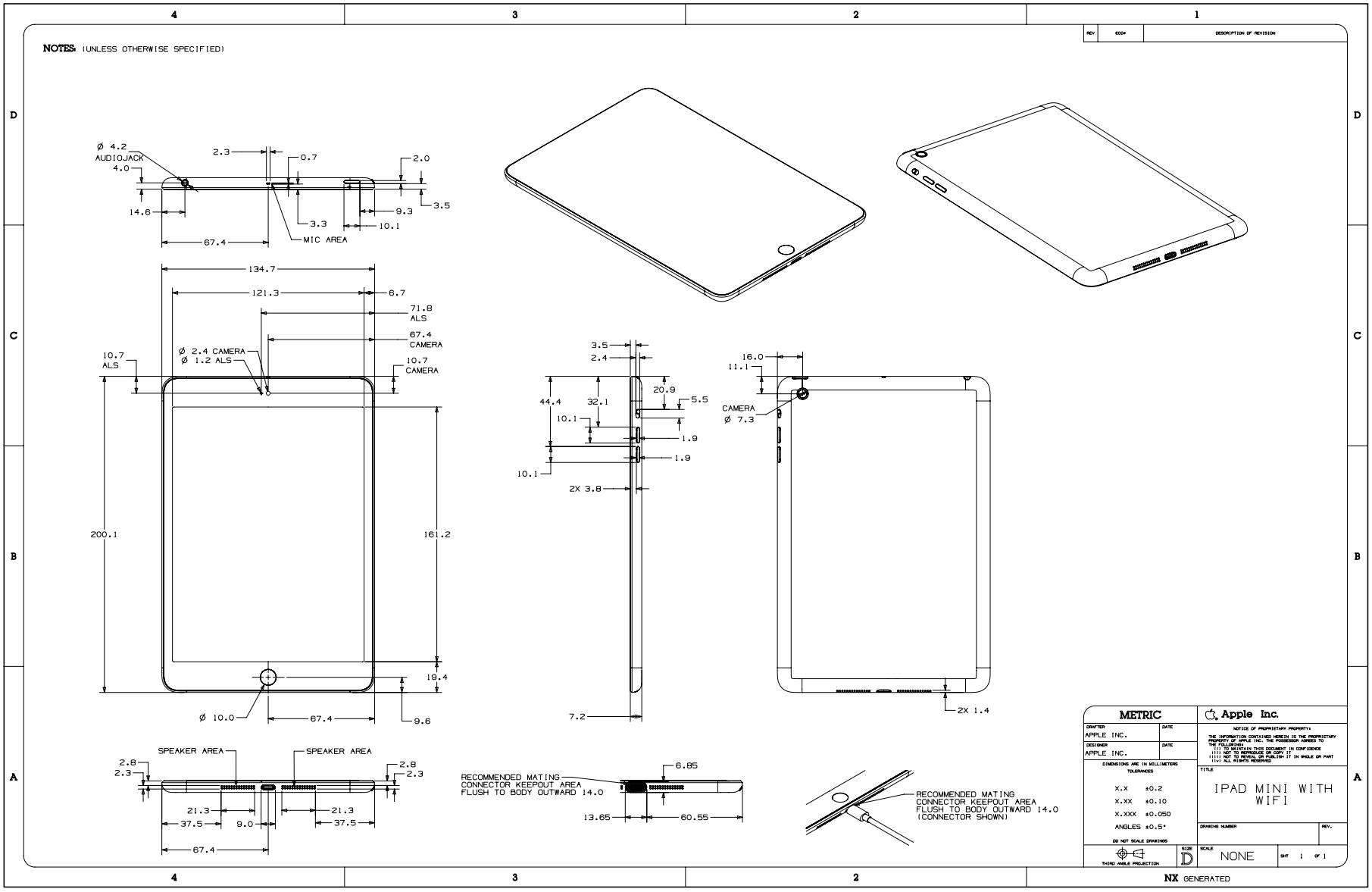

Copyright © 2023 Apple Inc. All Rights Reserved.

56.158 iPad mini with Wi-Fi + Cellular

[中文]

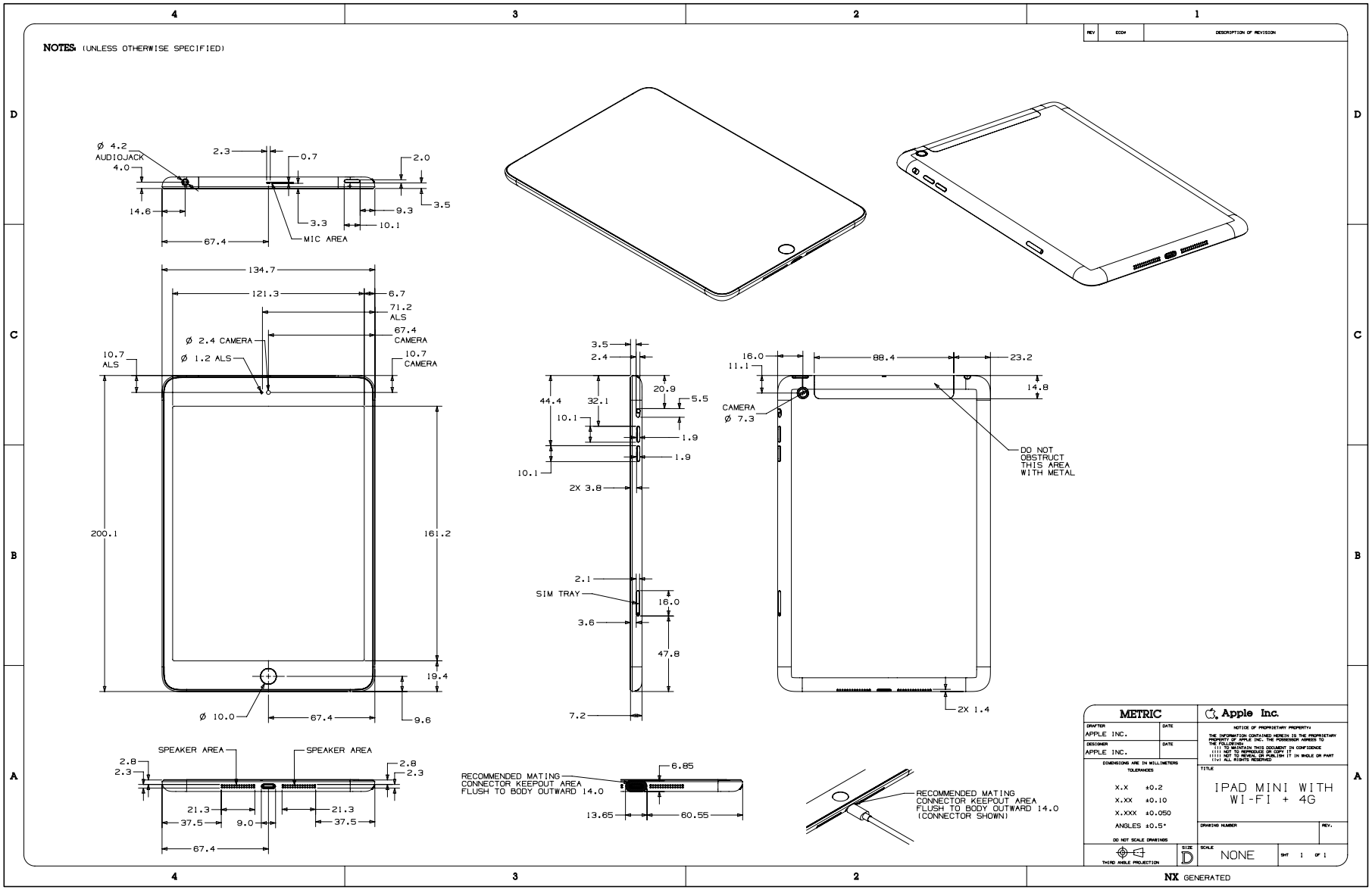

Copyright © 2023 Apple Inc. All Rights Reserved.

56.159 iPad (4th generation) with Wi-Fi

[中文]

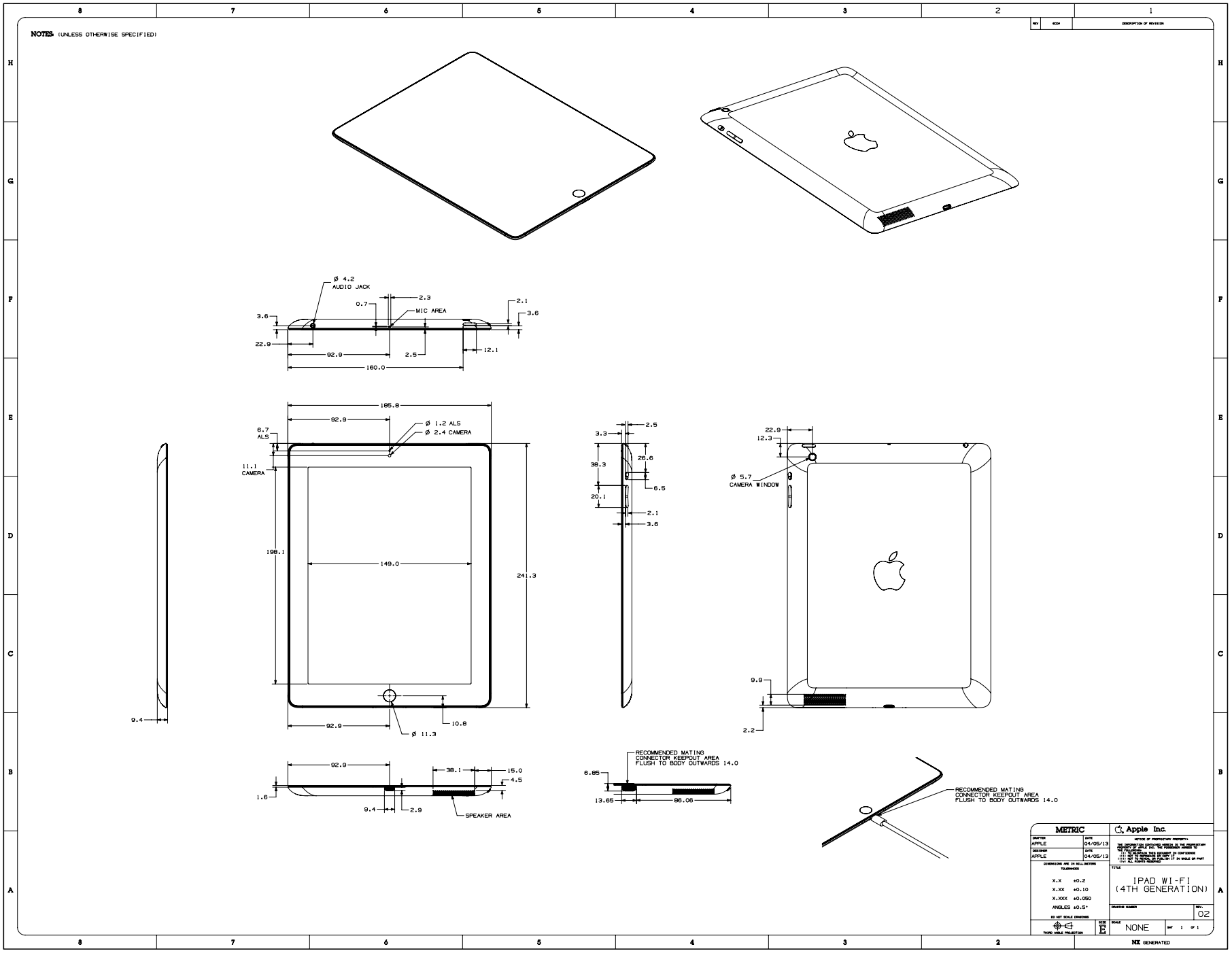

Copyright © 2023 Apple Inc. All Rights Reserved.

56.160 iPad (4th generation) with Wi-Fi + Cellular

[中文]

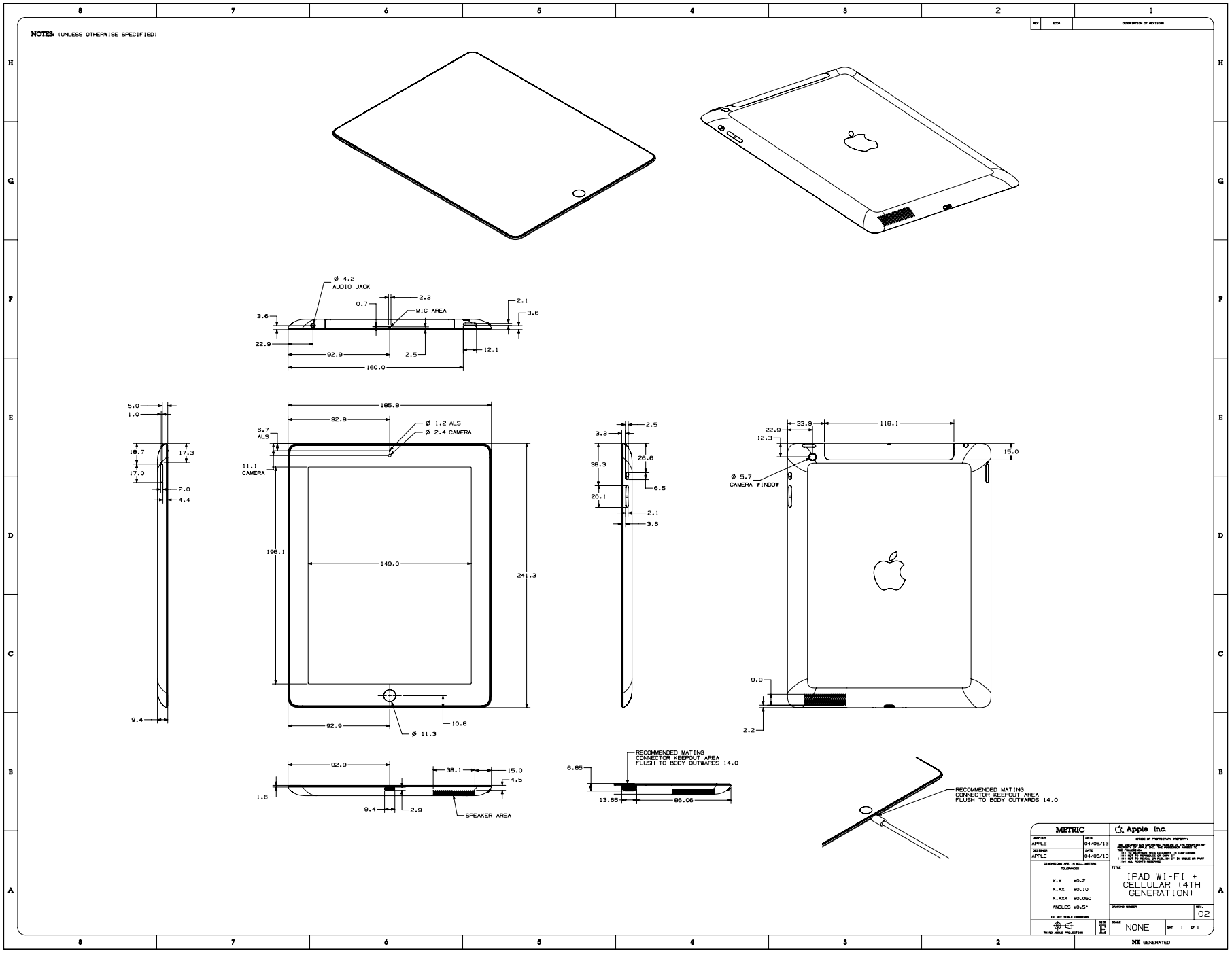

Copyright © 2023 Apple Inc. All Rights Reserved.

56.161 iPod touch (6th generation) and iPod touch (7th generation)

[中文]

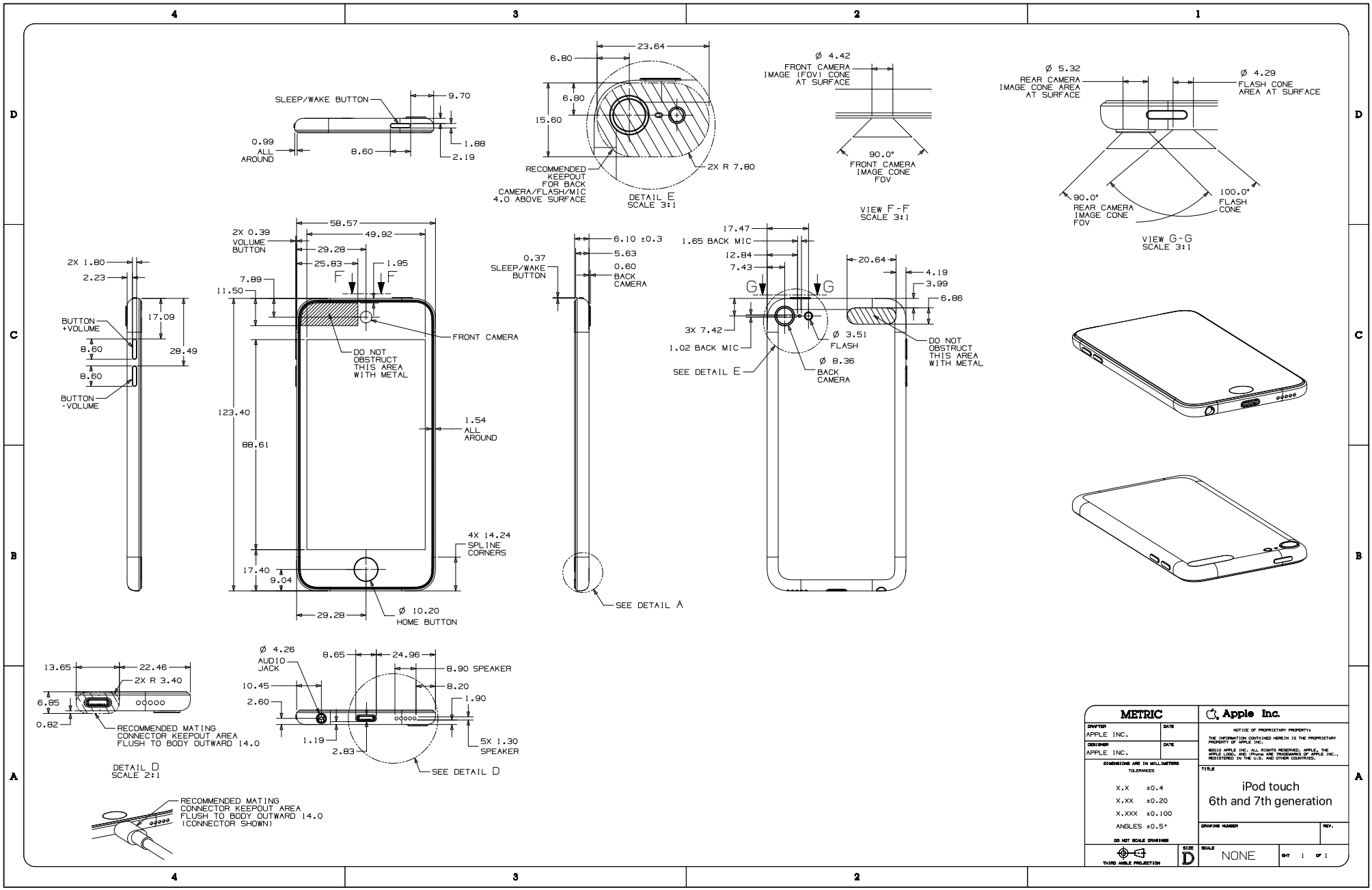

56.162 iPod touch (5th generation)

[中文]

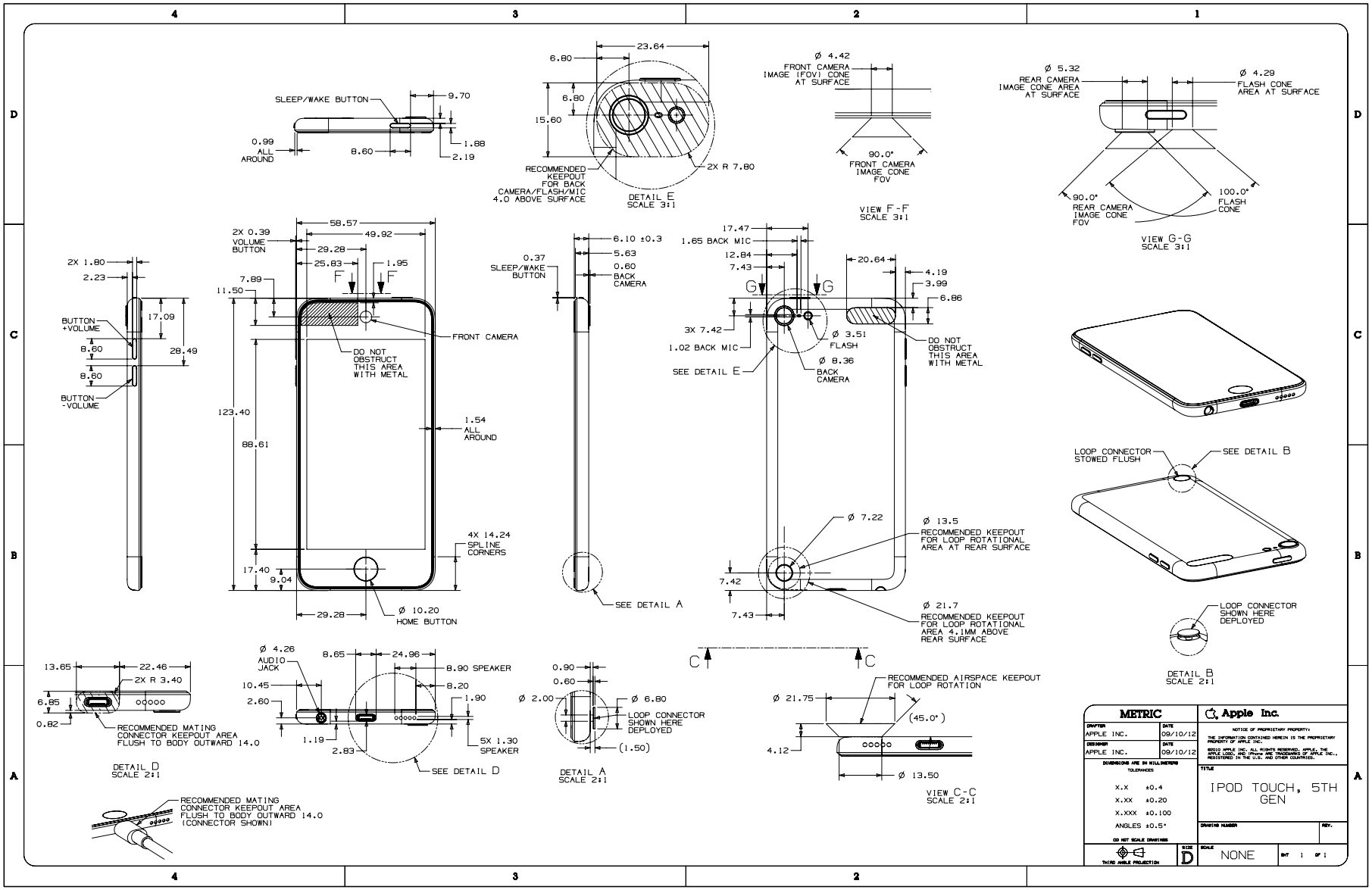

Copyright © 2023 Apple Inc. All Rights Reserved.

56.163 Apple Watch Ultra 2, 1 of 3

[中文]

NOTES:

1. CASE DOES NOT INTERFERE WITH CLICK OR ROTATION FUNCTION OF DIGITAL CROWN
   CASE DOES NOT APPLY FORCE ON DIGITAL CROWN
   CASE DOES NOT OBSTRUCT FACE OF CROWN
2. CASE DOES NOT OBSTRUCT THE WATCH ACOUSTIC OPENINGS AND ALTIMETER AND MUST NOT DEGRADE ACOUSTIC OR WATER EJECTION PERFORMANCE
3. CASE DOES NOT OBSTRUCT THE WATCH CHARGING INTERFACE
4. CASE DOES NOT OBSTRUCT THE WATCH OPTICAL SENSORS
5. CASE DOES NOT EXTEND INTO WATCH SENSOR WINDOWS
6. CASE DOES NOT CONTACT THE WATCH COVER GLASS
7. CASE DOES NOT CONTACT ELECTRICAL SENSORS
8. CASE DOES NOT INTERFERE WITH CLICK FUNCTION OF BUTTON
9. NO METAL CASES ALLOWED DUE TO ANTENNA FUNCTION
10. CASE DOES NOT CONTAIN FERROMAGNETIC MATERIAL

OVERALL DIMENSIONS AND CALLOUTS

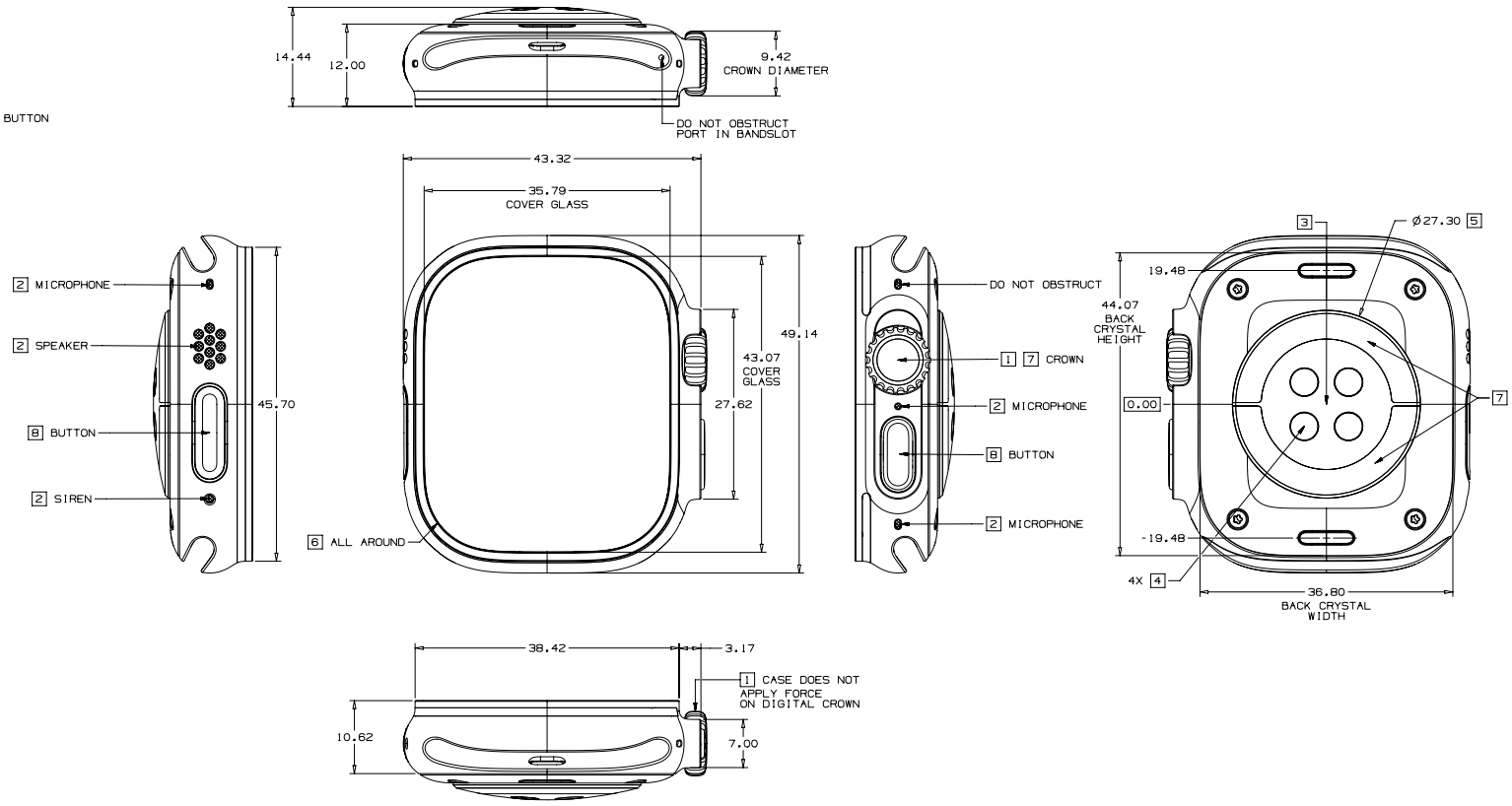

NOTICE OF PROPRIETARY PROPERTY:
THE INFORMATION CONTAINED HEREIN IS THE PROPRIETARY PROPERTY OF APPLE INC. THE POSSESSOR AGREES TO THE FOLLOWING:
(i) TO MAINTAIN THIS DOCUMENT IN CONFIDENCE
(ii) NOT TO REPRODUCE OR COPY IT
(iii) NOT TO REVEAL OR PUBLISH IT IN WHOLE OR PART
(iv) ALL RIGHTS RESERVED

Apple Inc.

SIZE	DRAWING NUMBER	REV.
D	APPLE WATCH ULTRA 2	01
SCALE: NONE	SHT 1 OF 3	

Copyright © 2023 Apple Inc. All Rights Reserved.

56.164 Apple Watch Ultra 2, 2 of 3

[中文]

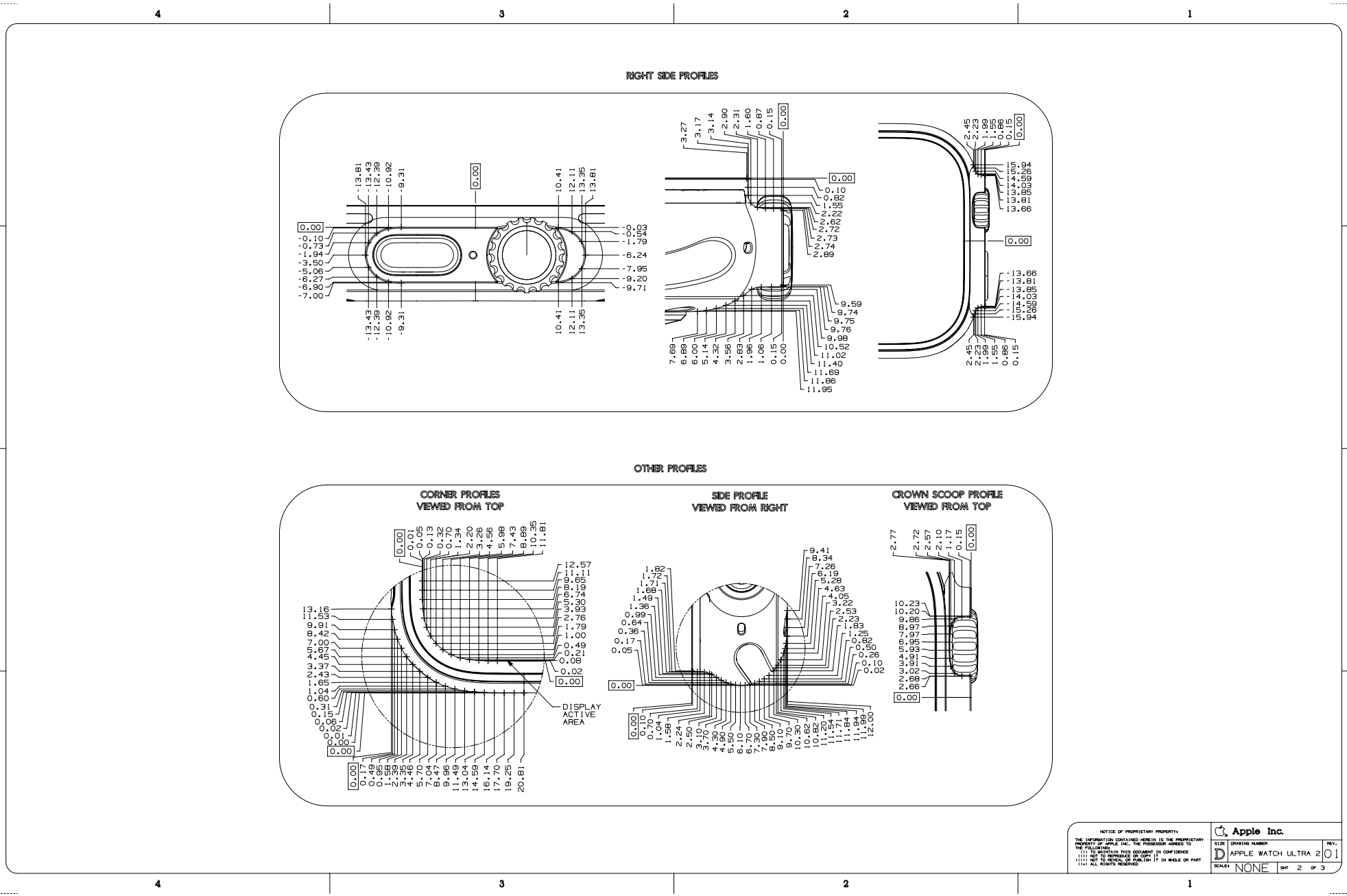

Copyright © 2023 Apple Inc. All Rights Reserved.

56.165 Apple Watch Ultra 2, 3 of 3

[中文]

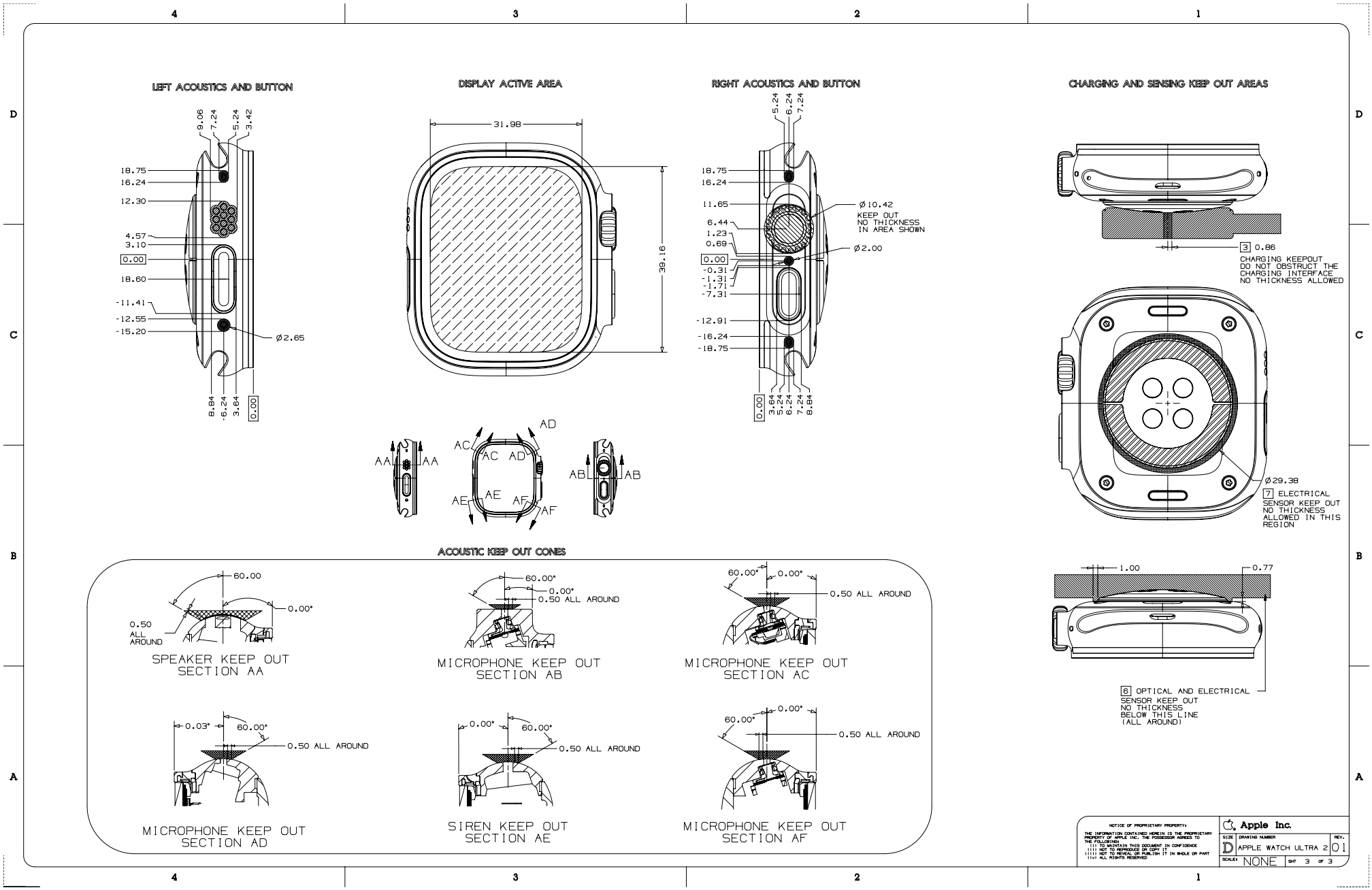

Copyright © 2023 Apple Inc. All Rights Reserved.

56.166 Apple Watch Series 9, 45 mm

[中文]

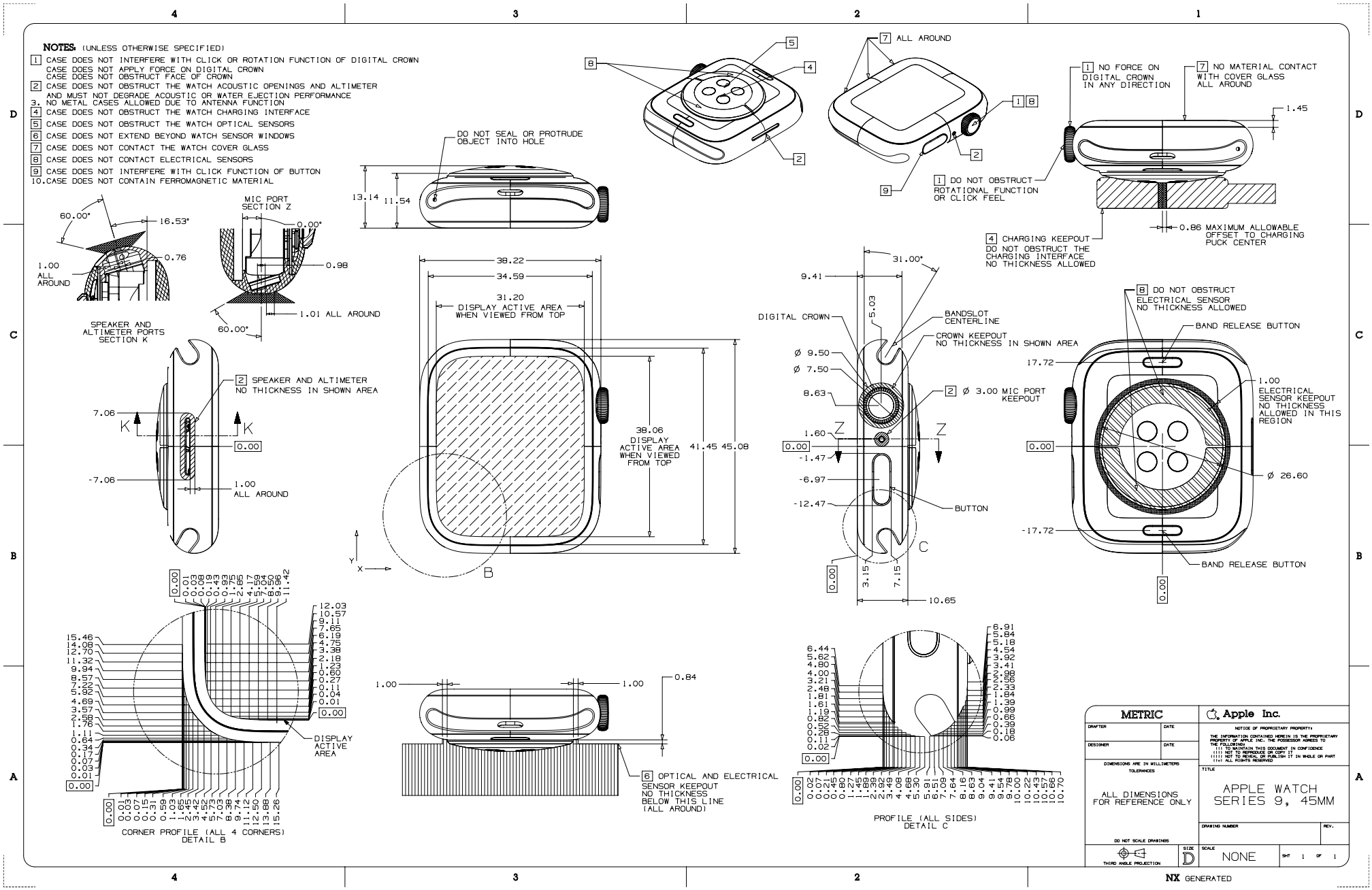

Copyright © 2023 Apple Inc. All Rights Reserved.

56.167 Apple Watch Series 9, 41 mm

[中文]

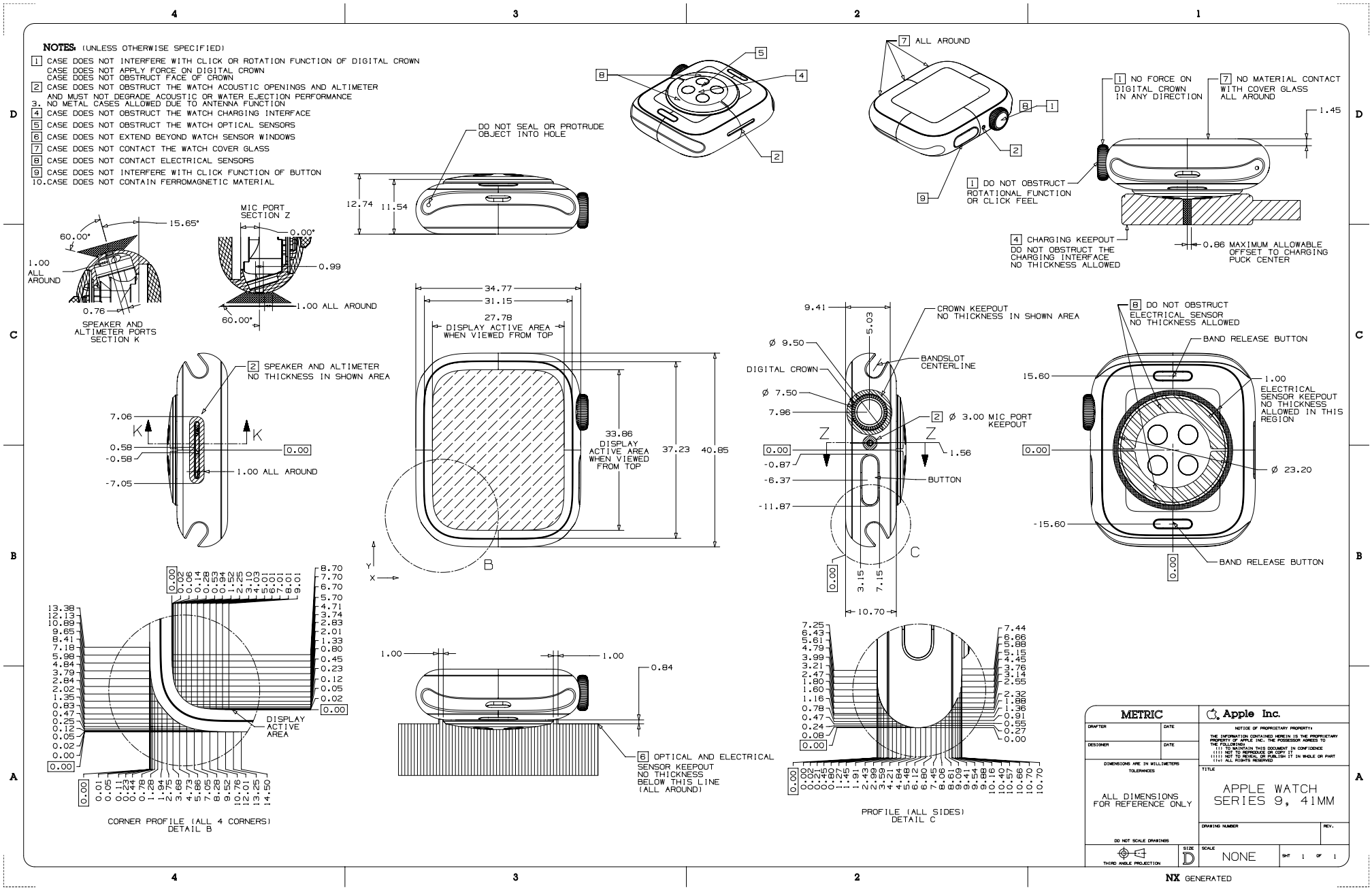

Copyright © 2023 Apple Inc. All Rights Reserved.

56.168 Apple Watch Ultra, 1 of 3

[中文]

NOTES:

1. CASE DOES NOT INTERFERE WITH CLICK OR ROTATION FUNCTION OF DIGITAL CROWN
   CASE DOES NOT APPLY FORCE ON DIGITAL CROWN
   CASE DOES NOT OBSTRUCT FACE OF CROWN
2. CASE DOES NOT OBSTRUCT THE WATCH ACOUSTIC OPENINGS AND ALTIMETER AND MUST NOT DEGRADE ACOUSTIC OR WATER EJECTION PERFORMANCE
3. CASE DOES NOT OBSTRUCT THE WATCH CHARGING INTERFACE
4. CASE DOES NOT OBSTRUCT THE WATCH OPTICAL SENSORS
5. CASE DOES NOT EXTEND INTO WATCH SENSOR WINDOWS
6. CASE DOES NOT CONTACT THE WATCH COVER GLASS
7. CASE DOES NOT CONTACT ELECTRICAL SENSORS
8. CASE DOES NOT INTERFERE WITH CLICK FUNCTION OF BUTTON
9. NO METAL CASES ALLOWED DUE TO ANTENNA FUNCTION
10. CASE DOES NOT CONTAIN FERROMAGNETIC MATERIAL

OVERALL DIMENSIONS AND CALLOUTS

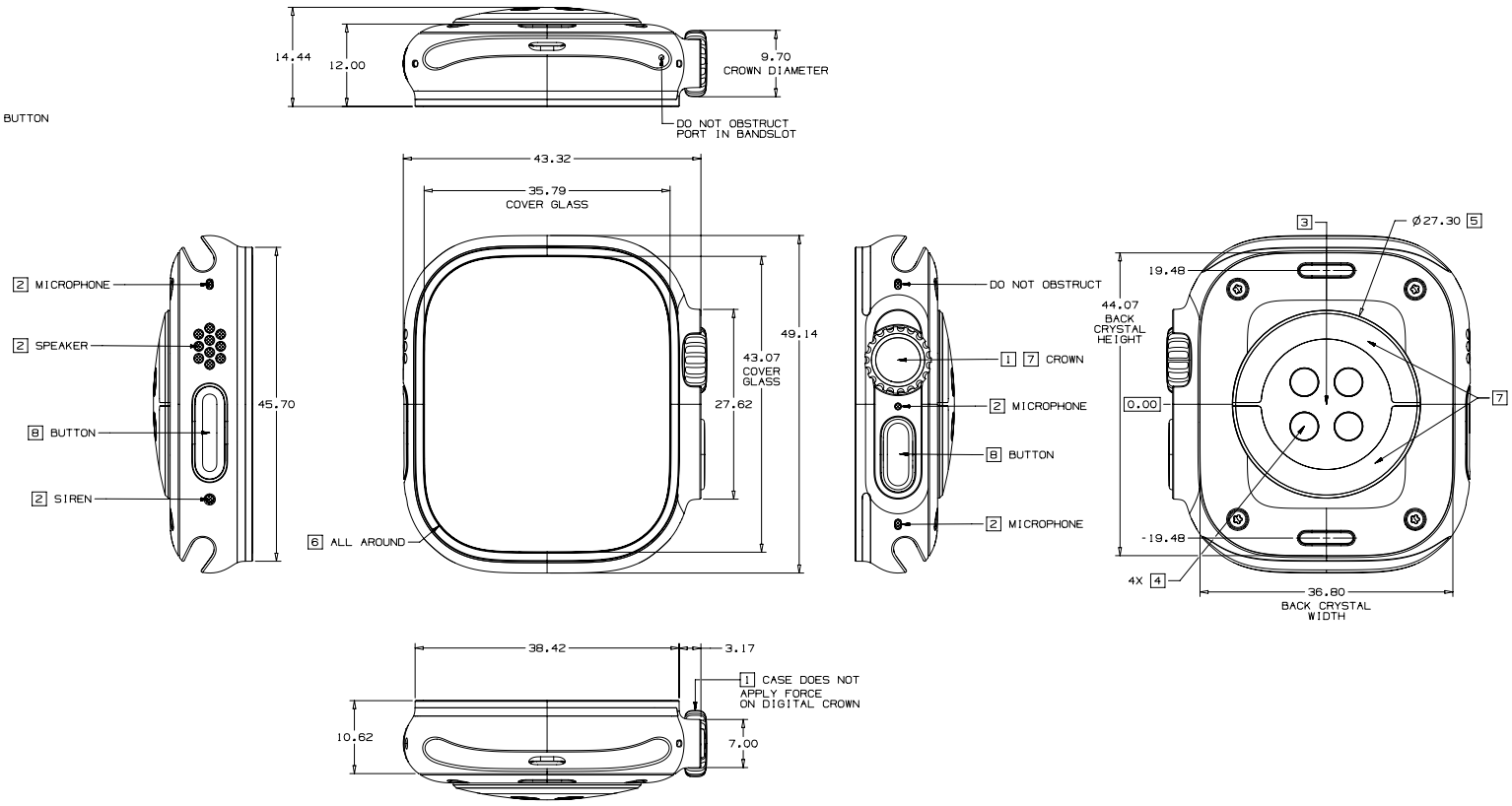

NOTICE OF PROPRIETARY PROPERTY:
THE INFORMATION CONTAINED HEREIN IS THE PROPRIETARY PROPERTY OF APPLE INC. THE POSSESSOR AGREES TO THE FOLLOWING:
(i) TO MAINTAIN THIS DOCUMENT IN CONFIDENCE
(ii) NOT TO REPRODUCE OR COPY IT
(iii) NOT TO REVEAL OR PUBLISH IT IN WHOLE OR PART
(iv) ALL RIGHTS RESERVED

Apple Inc.

SIZE	DRAWING NUMBER	REV.
D	APPLE WATCH ULTRA	01
SCALE: NONE	SHT 1 OF 3	

56.169 Apple Watch Ultra, 2 of 3

[中文]

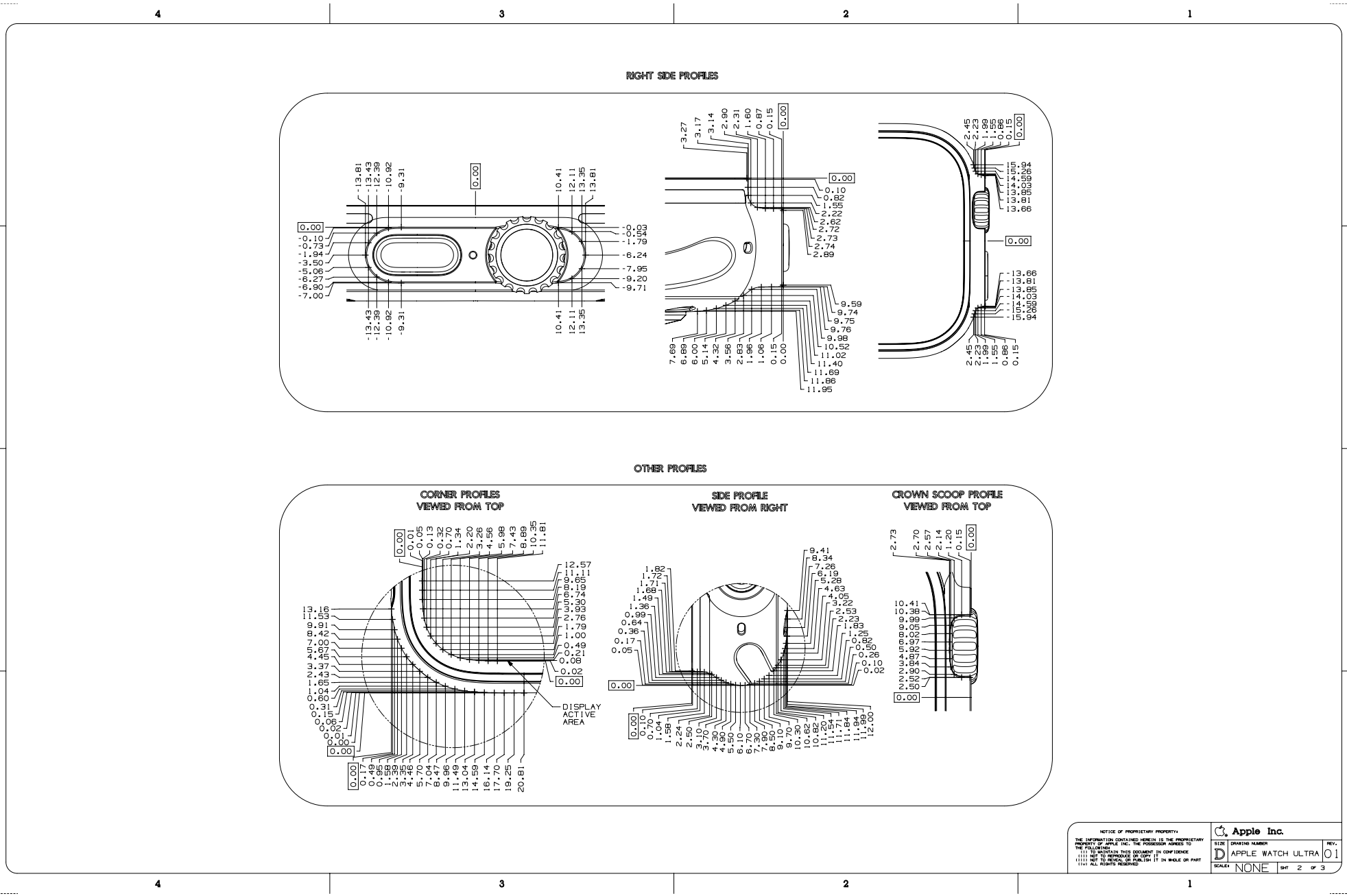

Copyright © 2023 Apple Inc. All Rights Reserved.

56.170 Apple Watch Ultra, 3 of 3

[中文]

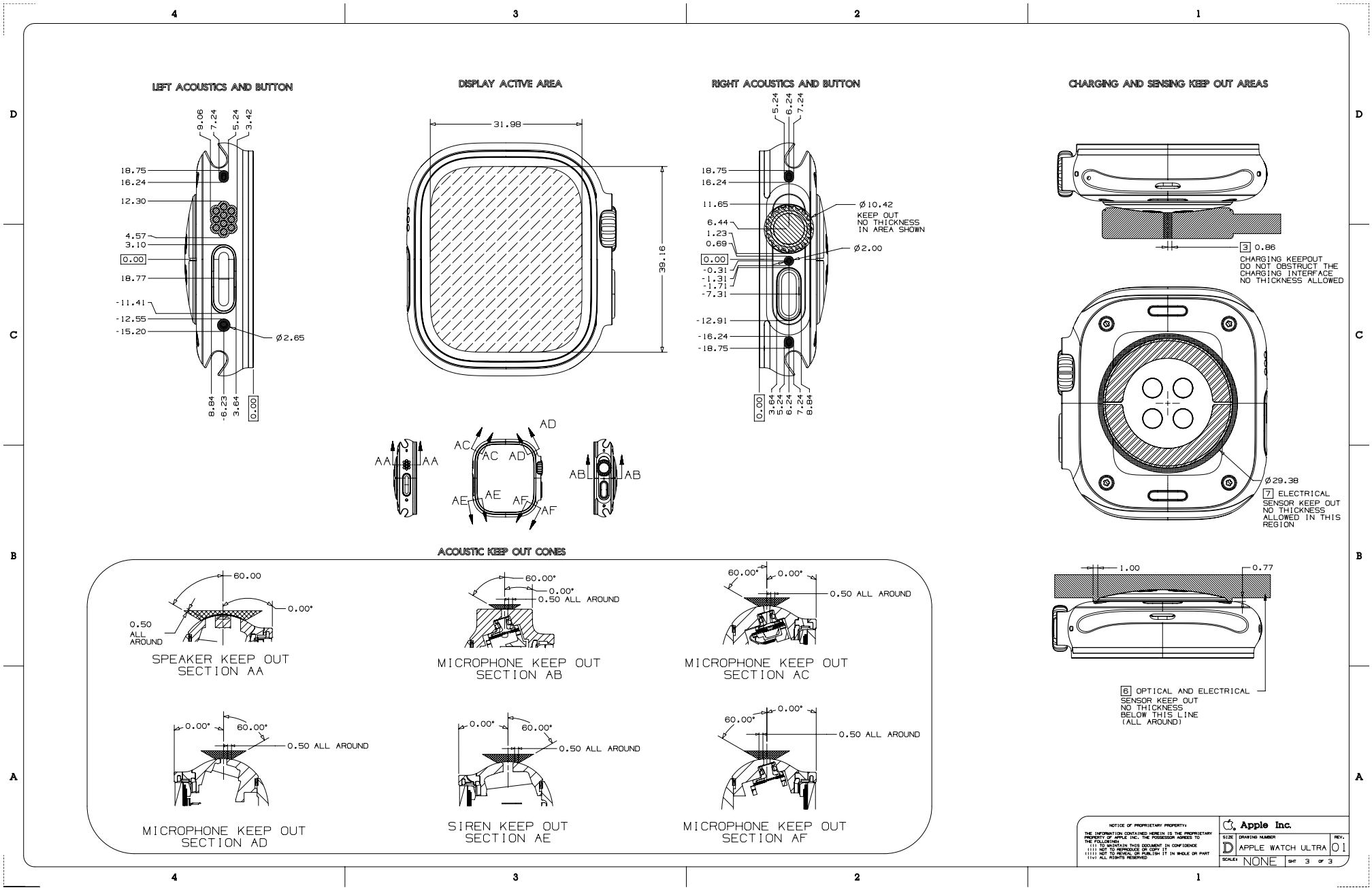

Copyright © 2023 Apple Inc. All Rights Reserved.

56.171 Apple Watch Series 8, 45 mm

[中文]

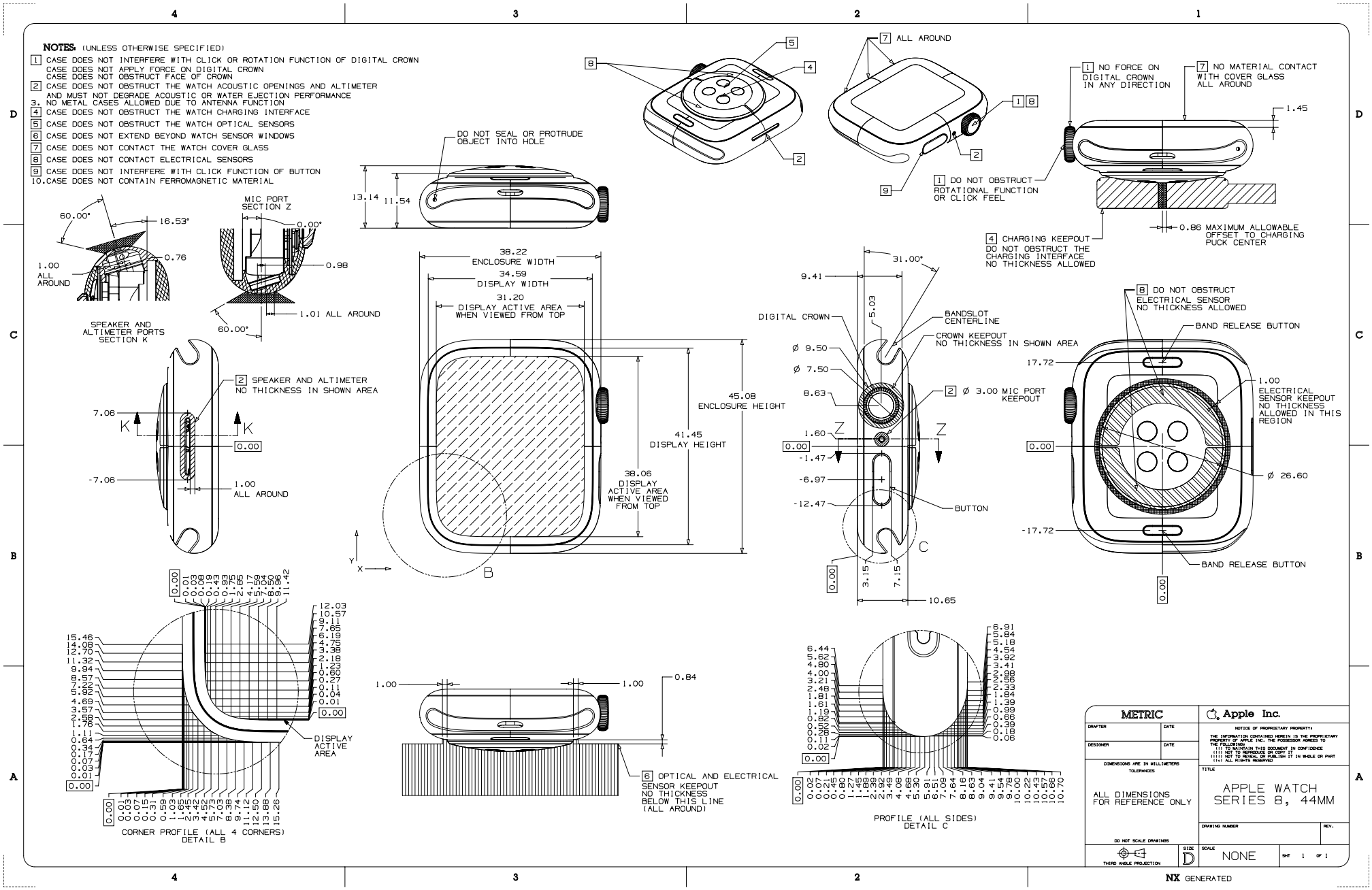

Copyright © 2023 Apple Inc. All Rights Reserved.

56.172 Apple Watch Series 8, 41 mm

[中文]

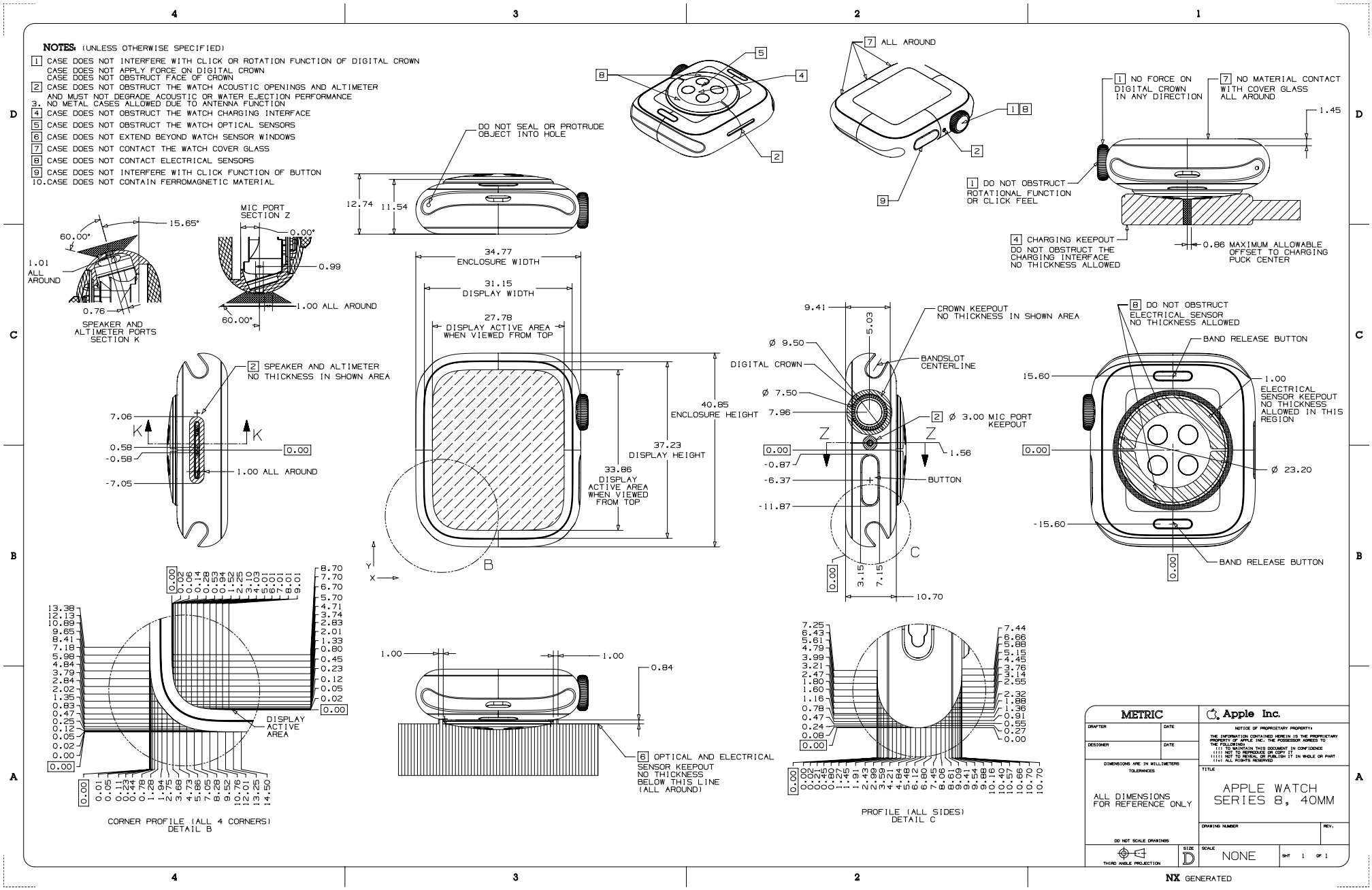

Copyright © 2023 Apple Inc. All Rights Reserved.

56.173 Apple Watch SE, 44 mm

[中文]

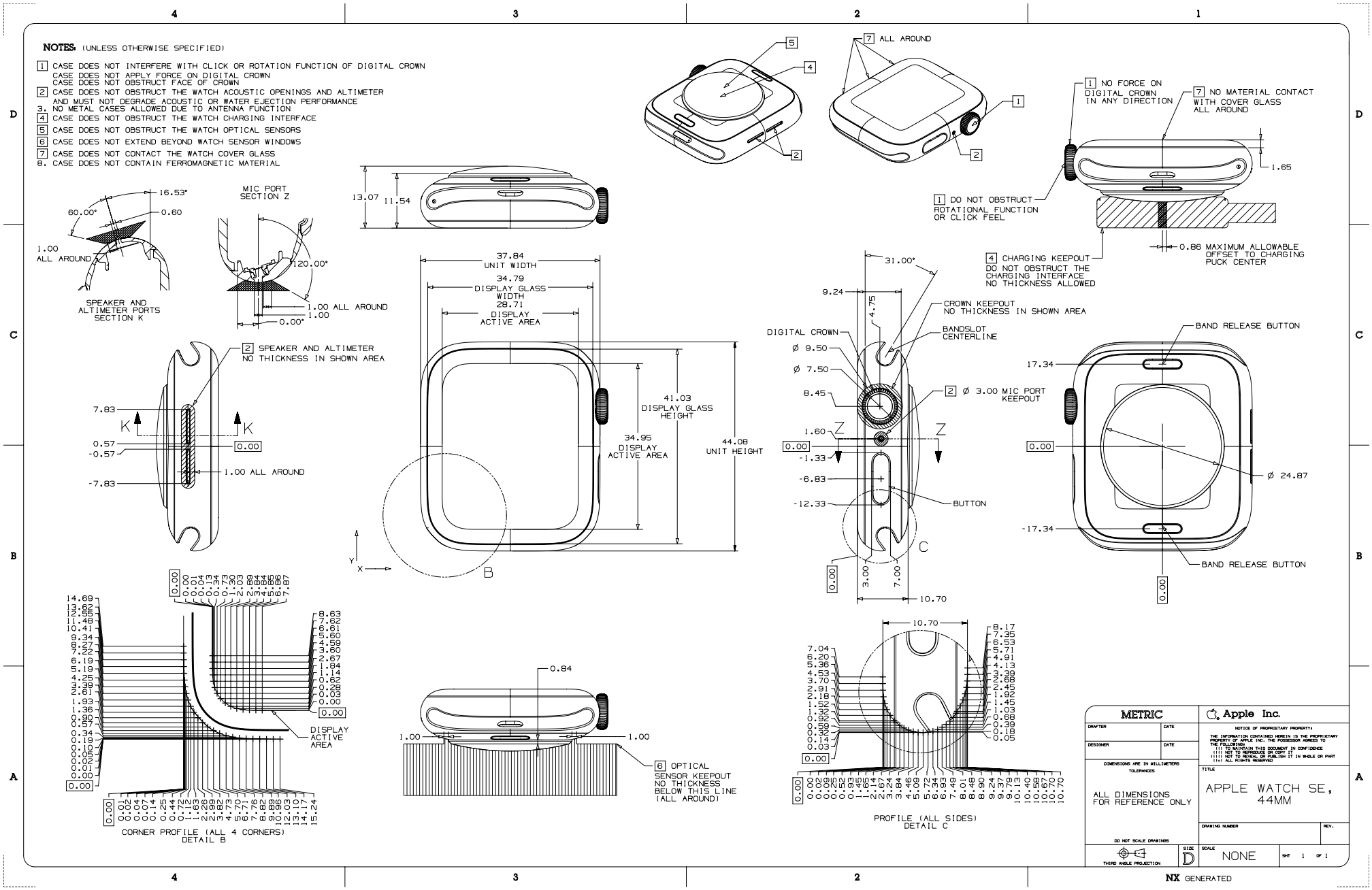

2023-10-10 | Copyright © 2023 Apple Inc. All Rights Reserved.

56.174 Apple Watch SE, 40 mm

[中文]

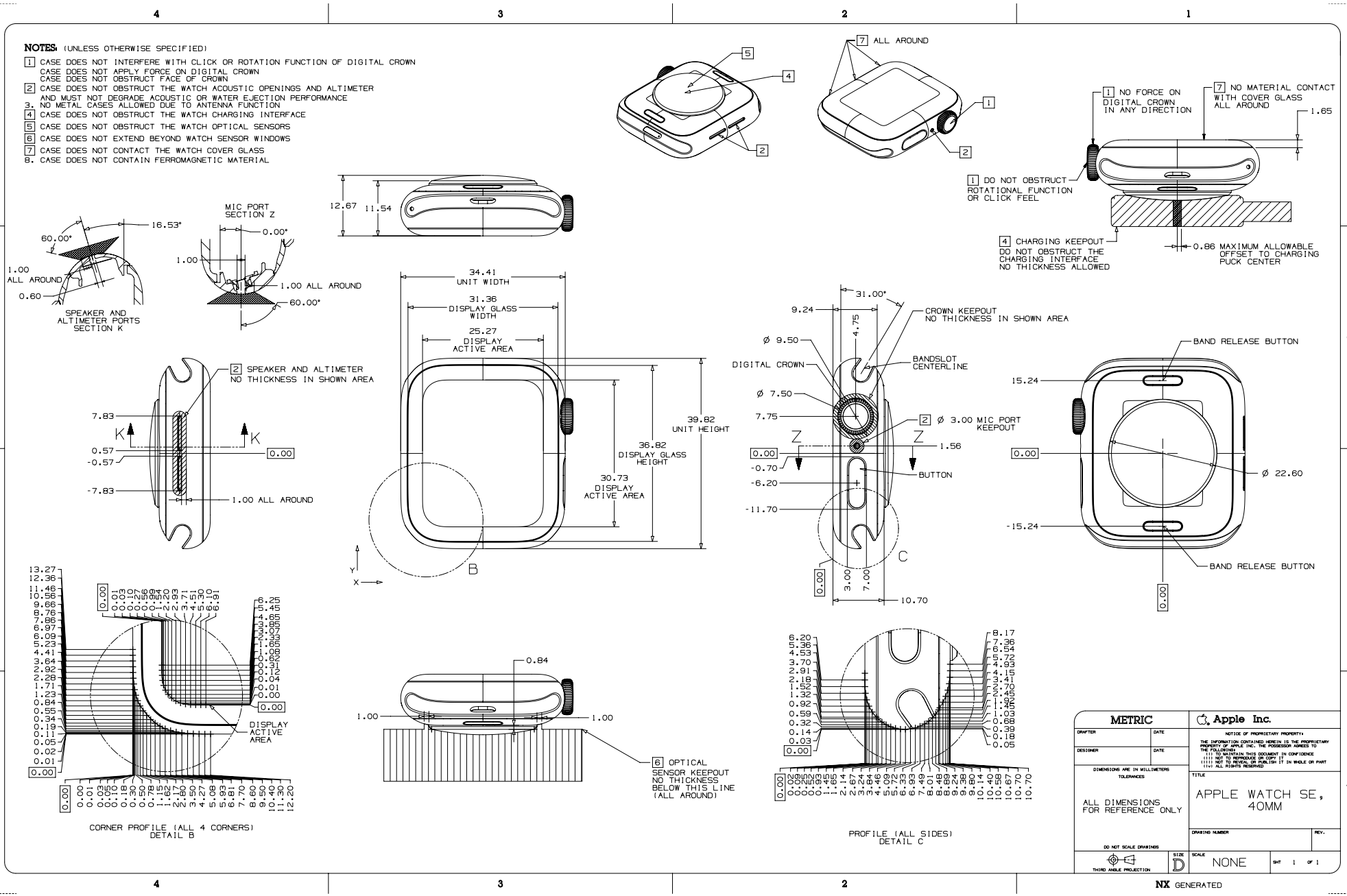

Copyright © 2023 Apple Inc. All Rights Reserved.

56.175 Apple Watch Series 7, 45 mm

[中文]

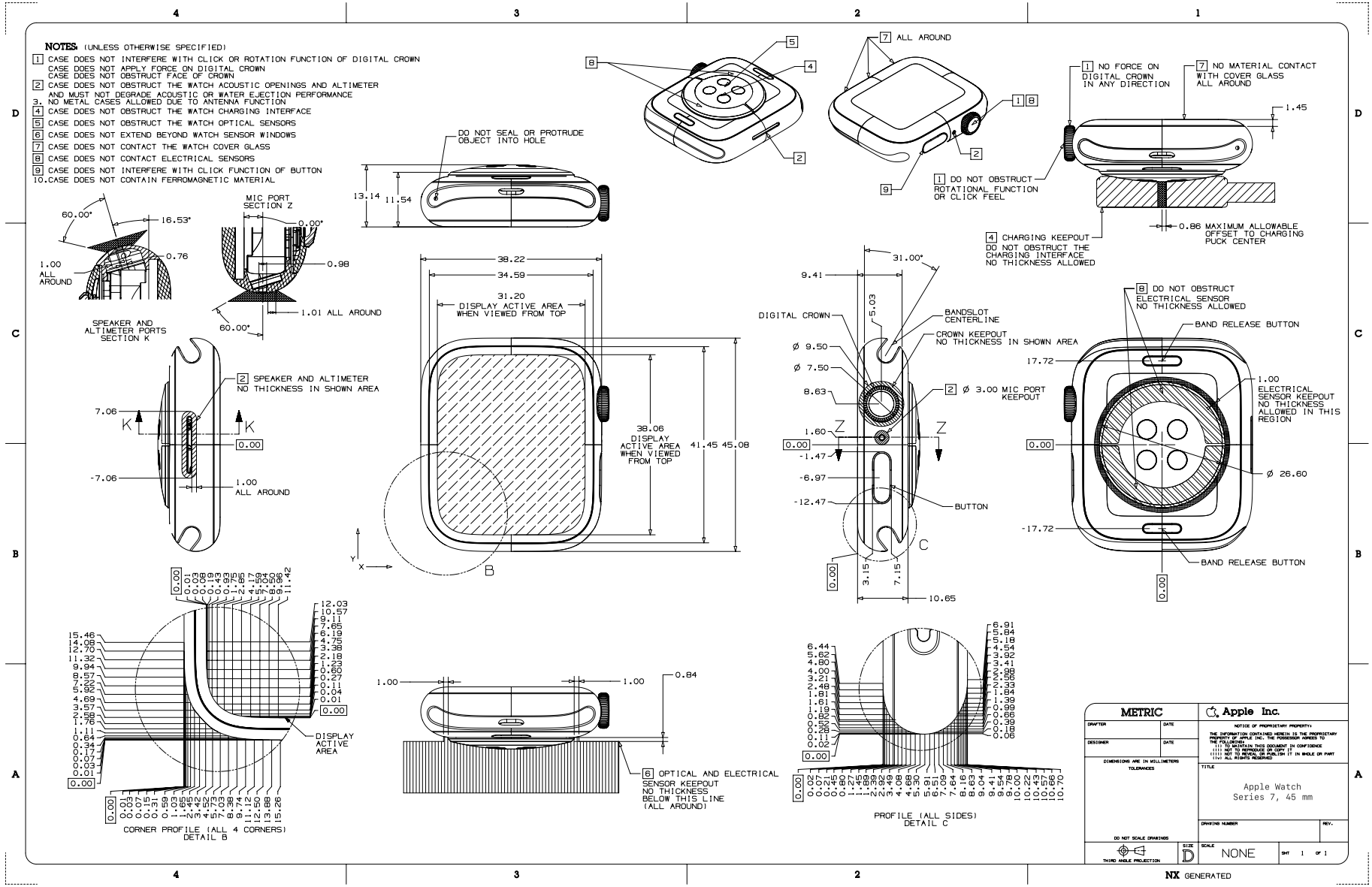

56.176 Apple Watch Series 7, 41 mm

[中文]

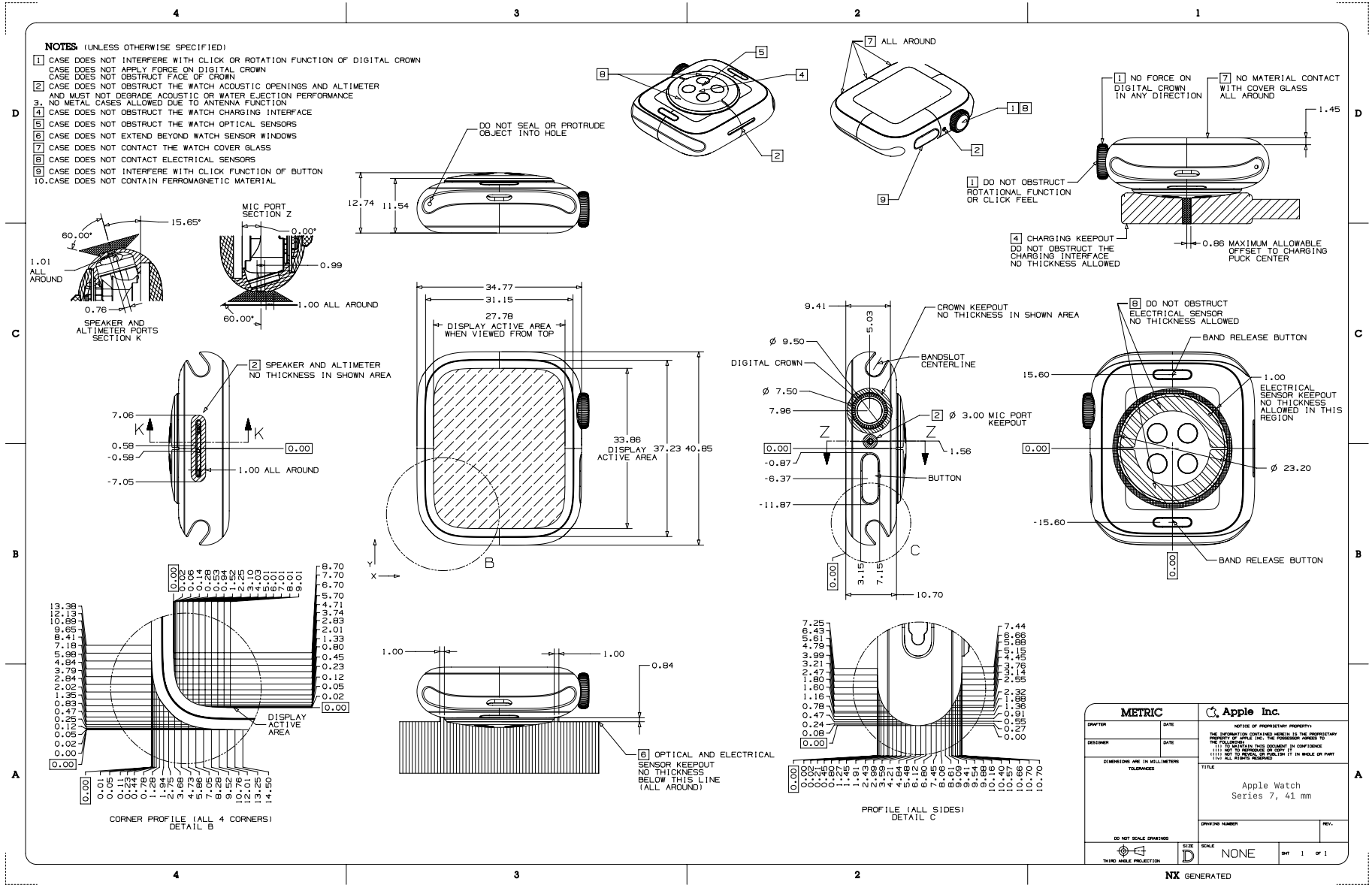

56.177 Apple Watch Series 6, 44 mm

[中文]

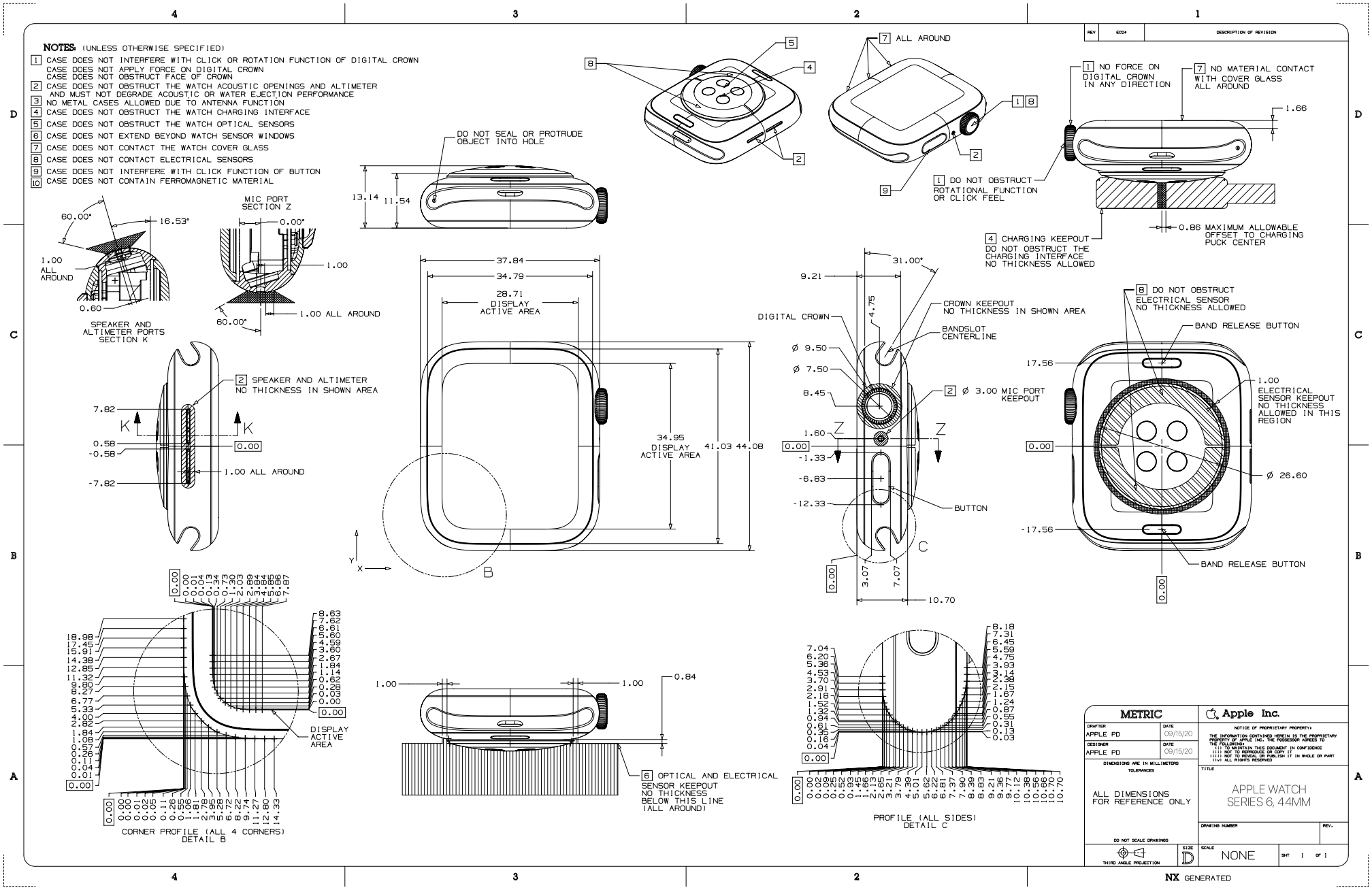
NOTES: (UNLESS OTHERWISE SPECIFIED)
1 CASE DOES NOT INTERFERE WITH CLICK OR ROTATION FUNCTION OF DIGITAL CROWN
CASE DOES NOT APPLY FORCE ON DIGITAL CROWN
CASE DOES NOT OBSTRUCT FACE OF CROWN
2 CASE DOES NOT OBSTRUCT THE WATCH ACOUSTIC OPENINGS AND ALTIMETER AND MUST NOT DEGRADE ACOUSTIC OR WATER EJECTION PERFORMANCE
3 NO METAL CASES ALLOWED DUE TO ANTENNA FUNCTION
4 CASE DOES NOT OBSTRUCT THE WATCH CHARGING INTERFACE
5 CASE DOES NOT OBSTRUCT THE WATCH OPTICAL SENSORS
6 CASE DOES NOT EXTEND BEYOND WATCH SENSOR WINDOWS
7 CASE DOES NOT CONTACT THE WATCH COVER GLASS
8 CASE DOES NOT CONTACT ELECTRICAL SENSORS
9 CASE DOES NOT INTERFERE WITH CLICK FUNCTION OF BUTTON
10 CASE DOES NOT CONTAIN FERROMAGNETIC MATERIAL
REV
ECO#
DESCRIPTION OF REVISION
7 ALL AROUND
1 NO FORCE ON DIGITAL CROWN IN ANY DIRECTION
7 NO MATERIAL CONTACT WITH COVER GLASS ALL AROUND
1.66
1 DO NOT OBSTRUCT ROTATIONAL FUNCTION OR CLICK FEEL
4 CHARGING KEEPOUT
DO NOT OBSTRUCT THE CHARGING INTERFACE
NO THICKNESS ALLOWED
0.86 MAXIMUM ALLOWABLE OFFSET TO CHARGING PUCK CENTER
DO NOT SEAL OR PROTRUDE OBJECT INTO HOLE
13.14
11.54
60.00°
16.53°
1.00 ALL AROUND
0.60
SPEAKER AND ALTIMETER PORTS SECTION K
MIC PORT SECTION Z
0.00°
1.00
60.00°
1.00 ALL AROUND
2 SPEAKER AND ALTIMETER NO THICKNESS IN SHOWN AREA
7.82
K
K
0.58
-0.58
0.00
1.00 ALL AROUND
-7.82
37.84
34.79
28.71
DISPLAY ACTIVE AREA
34.95
DISPLAY ACTIVE AREA
41.03
44.08
B
Y
X
31.00°
9.21
DIGITAL CROWN
4.75
CROWN KEEPOUT NO THICKNESS IN SHOWN AREA
BANDSLOT CENTERLINE
Ø 9.50
Ø 7.50
8.45
2 Ø 3.00 MIC PORT KEEPOUT
1.60
Z
Z
0.00
-1.33
-6.83
-12.33
BUTTON
C
3.07
7.07
10.70
8 DO NOT OBSTRUCT ELECTRICAL SENSOR NO THICKNESS ALLOWED
BAND RELEASE BUTTON
17.56
1.00
ELECTRICAL SENSOR KEEPOUT NO THICKNESS ALLOWED IN THIS REGION
0.00
Ø 26.60
-17.56
BAND RELEASE BUTTON
0.00
0.00 0.00 0.01 0.04 0.13 0.34 0.73 1.30 2.03 2.89 3.84 4.84 5.86 6.87
8.63 7.62 6.61 5.60 4.59 3.60 2.67 1.84 1.14 0.62 0.28 0.03 0.00
18.98 17.45 15.91 14.38 12.85 11.32 9.80 8.27 6.77 5.33 4.00 2.82 1.84 1.08 0.57 0.26 0.11 0.04 0.01 0.00
0.00
DISPLAY ACTIVE AREA
0.00 0.00 0.00 0.01 0.02 0.05 0.11 0.26 0.55 1.06 1.91 3.25 5.28 8.22 9.74 11.27 12.80 14.33
CORNER PROFILE (ALL 4 CORNERS)
DETAIL B
1.00
1.00
0.84
6 OPTICAL AND ELECTRICAL SENSOR KEEPOUT NO THICKNESS BELOW THIS LINE (ALL AROUND)
7.04 6.20 5.36 4.53 3.70 2.91 2.18 1.52 1.32 0.94 0.61 0.35 0.16 0.04 0.00
8.18 7.31 6.45 5.59 4.75 3.93 3.14 2.38 2.15 1.67 1.24 0.87 0.55 0.31 0.13 0.03
0.00 0.00 0.00

56.178 Apple Watch Series 6, 40 mm

[中文]

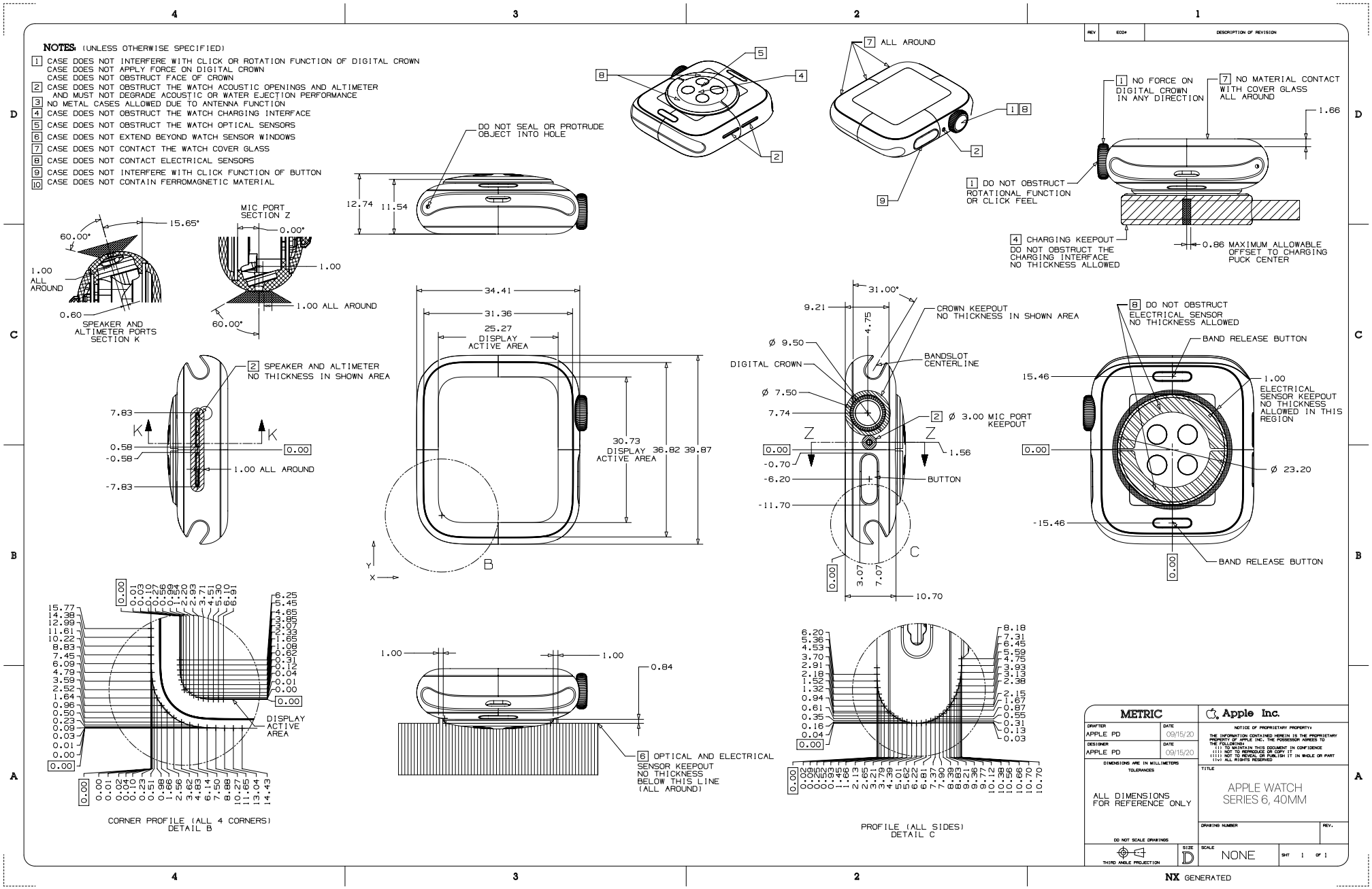

Copyright © 2023 Apple Inc. All Rights Reserved.

56.179 Apple Watch SE (1st generation), 44 mm

[中文]

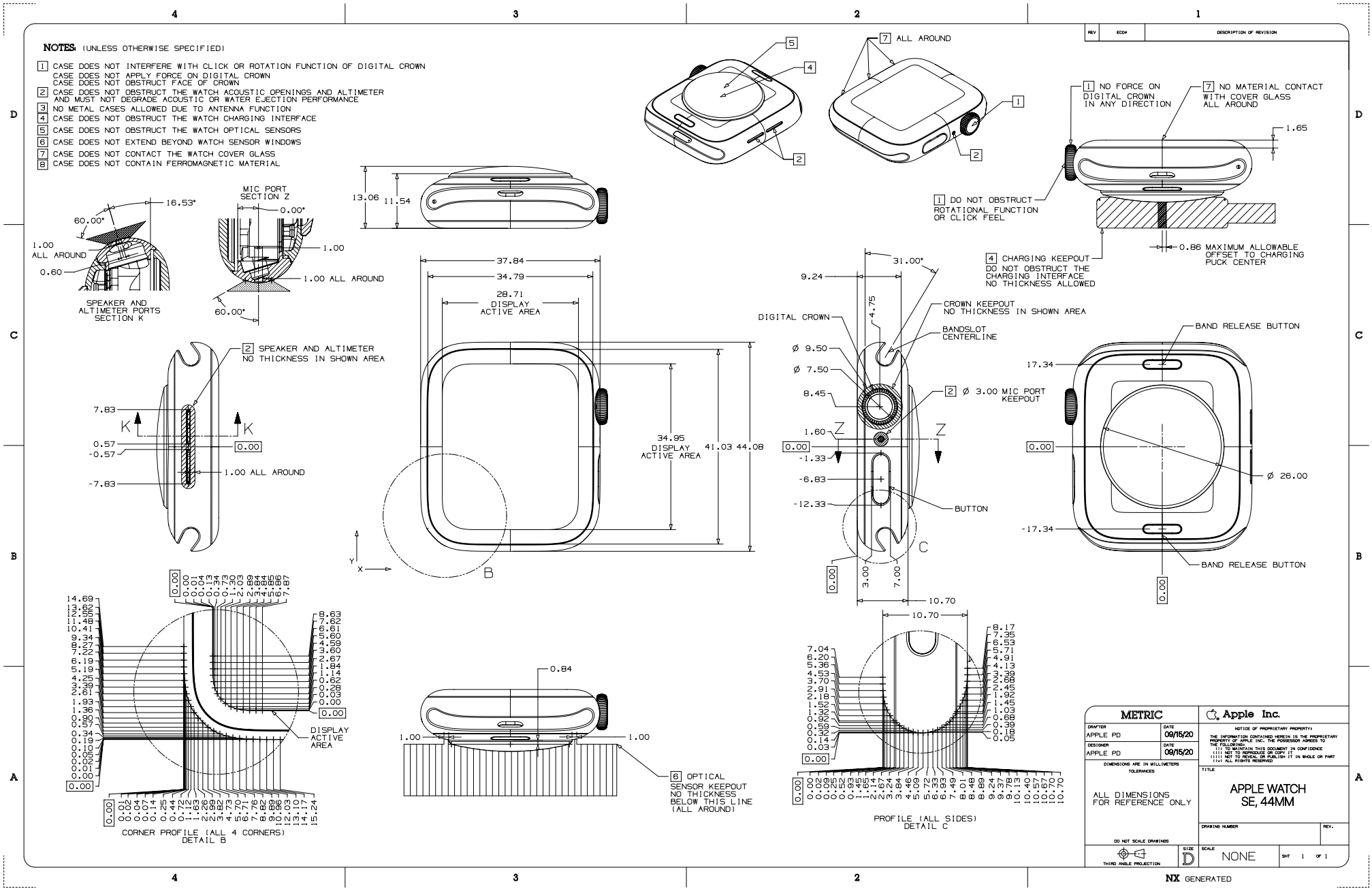

Copyright © 2023 Apple Inc. All Rights Reserved.

56.180 Apple Watch SE (1st generation), 40 mm

[中文]

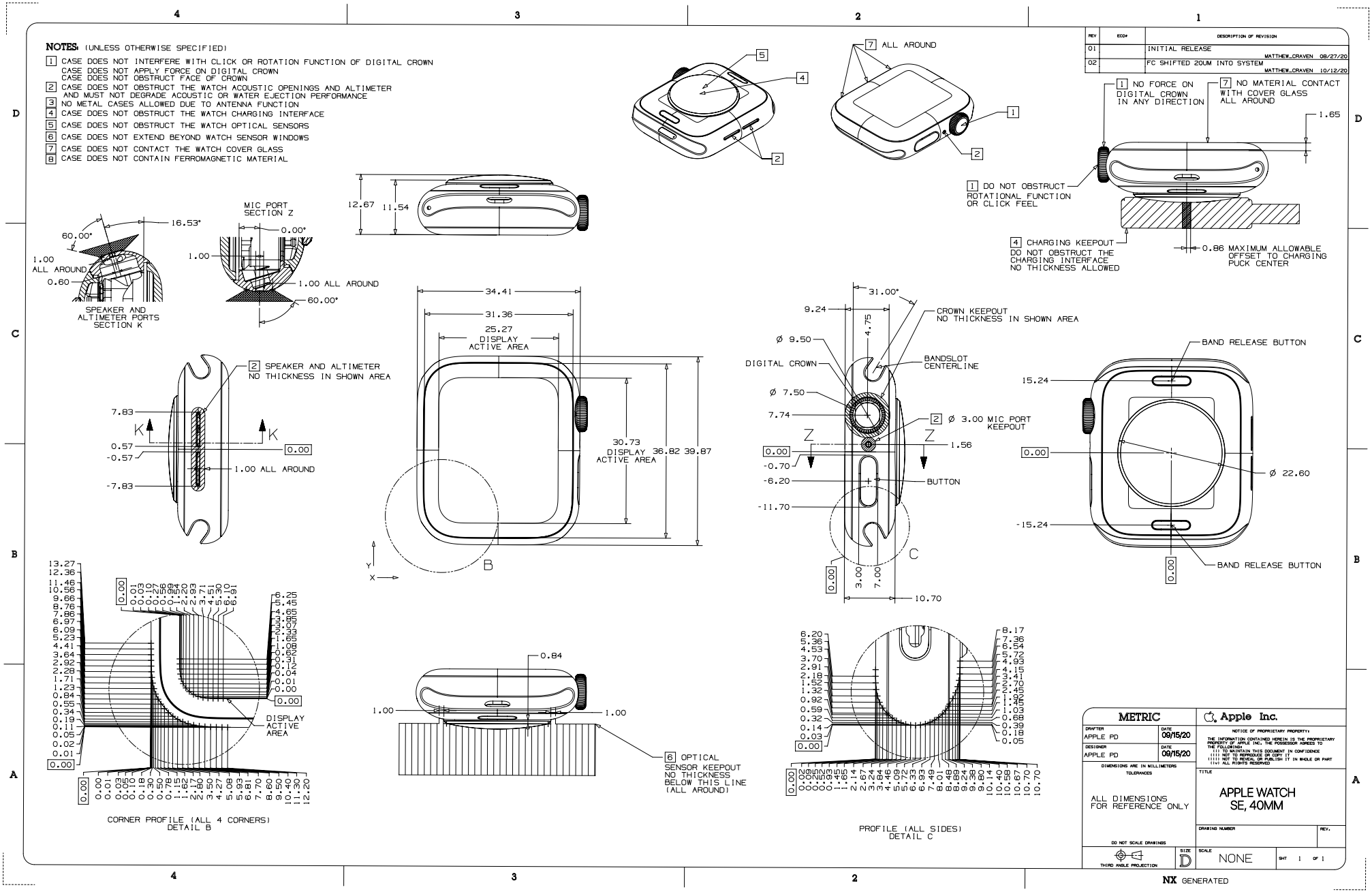

56.181 Apple Watch Series 5, 44 mm

[中文]

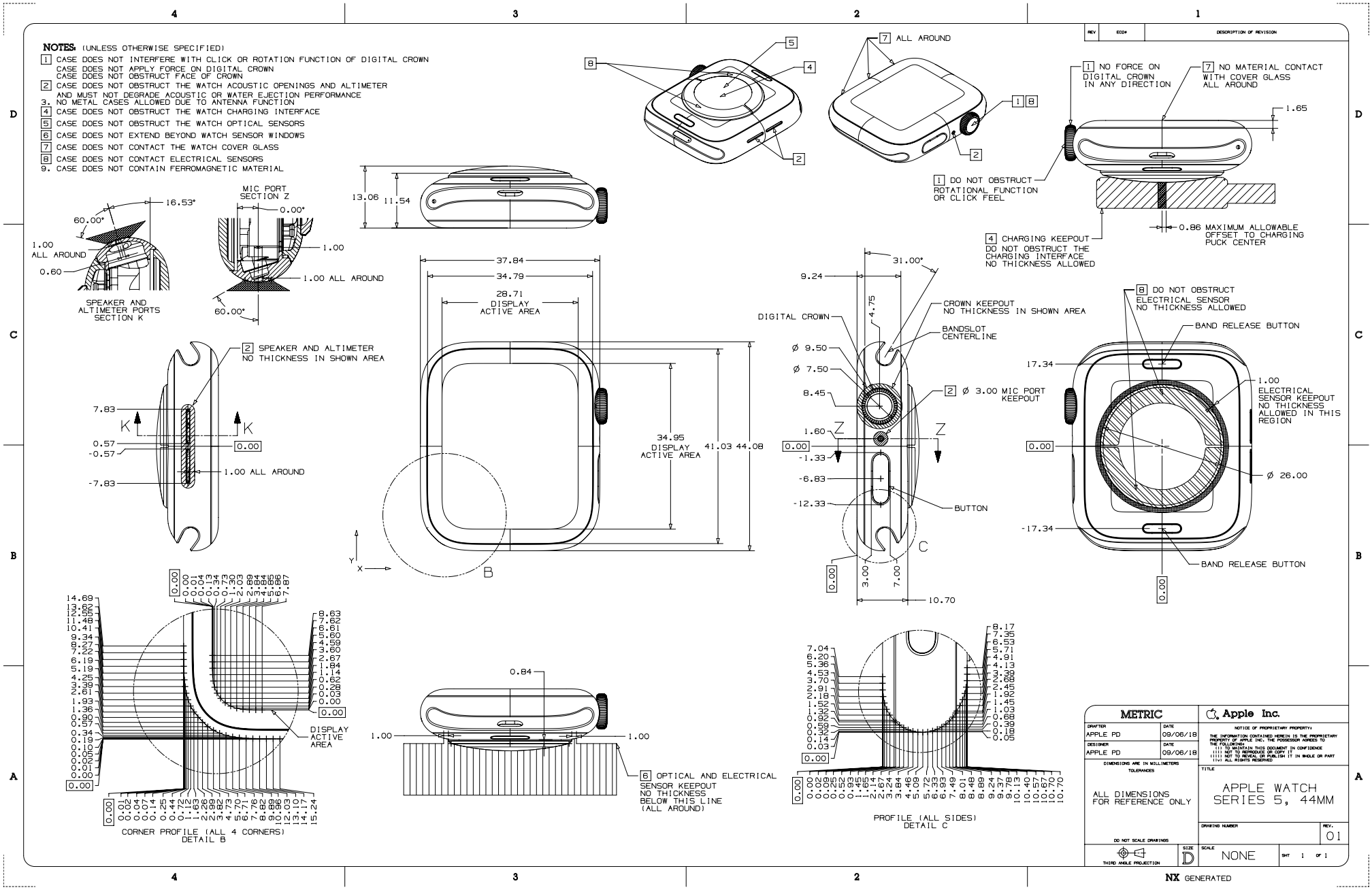

Copyright © 2023 Apple Inc. All Rights Reserved.

56.182 Apple Watch Series 5, 40 mm

[中文]

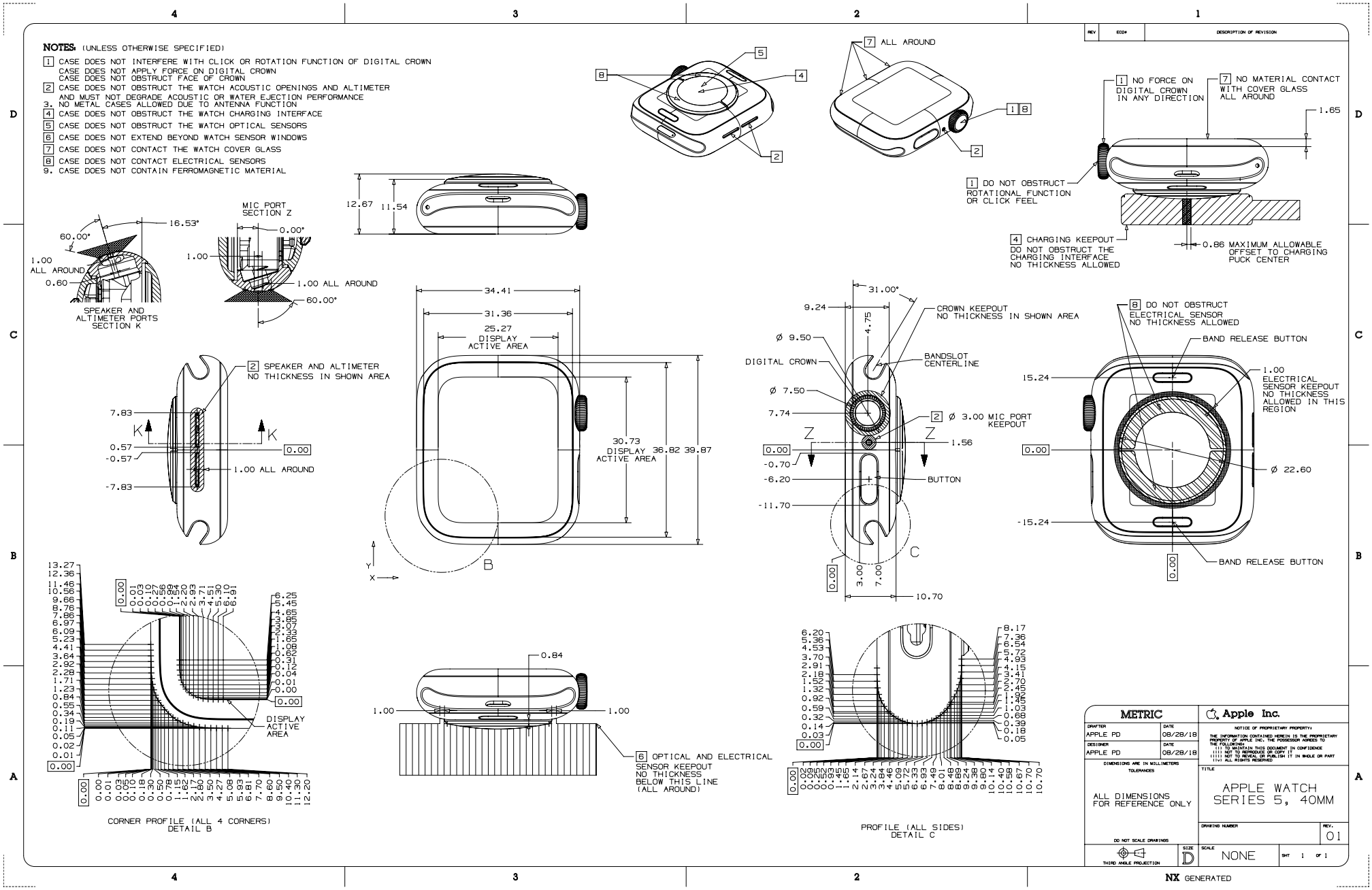

Copyright © 2023 Apple Inc. All Rights Reserved.

56.183 Apple Watch Series 5 Ceramic, 44 mm

[中文]

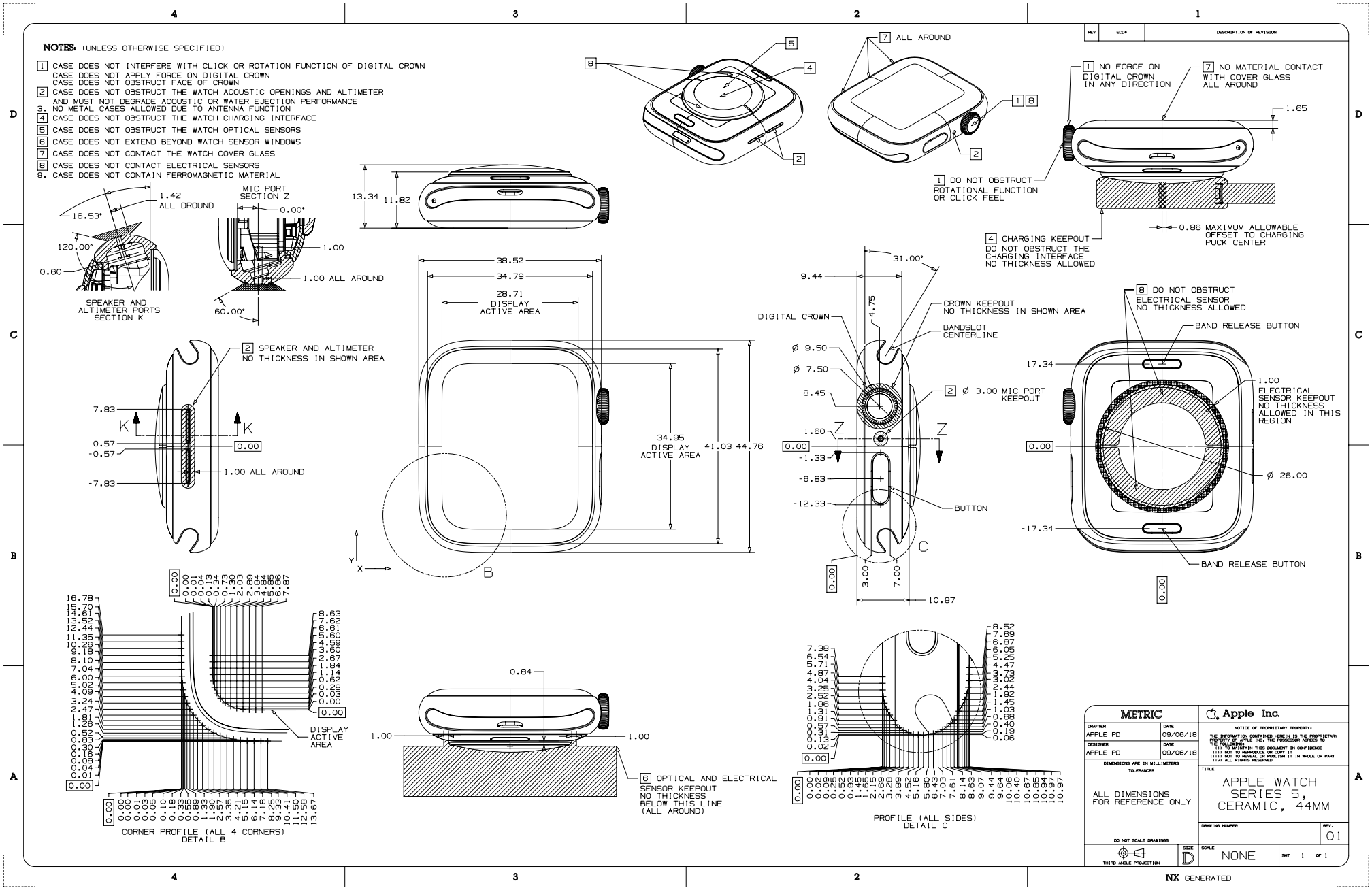

Copyright © 2023 Apple Inc. All Rights Reserved.

56.184 Apple Watch Series 5 Ceramic, 40 mm

[中文]

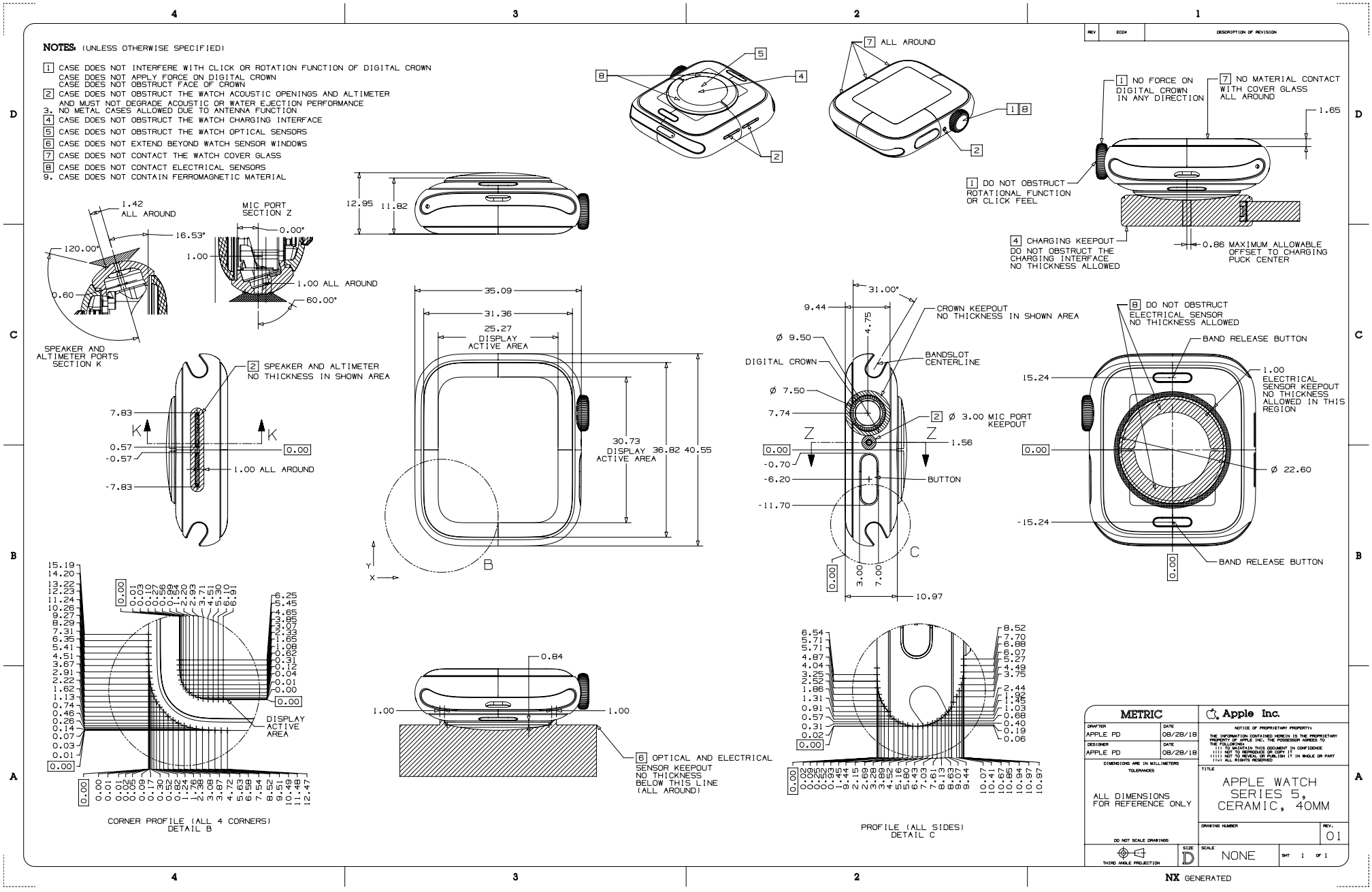

Copyright © 2023 Apple Inc. All Rights Reserved.

56.185 Apple Watch Series 4, 44 mm

[中文]

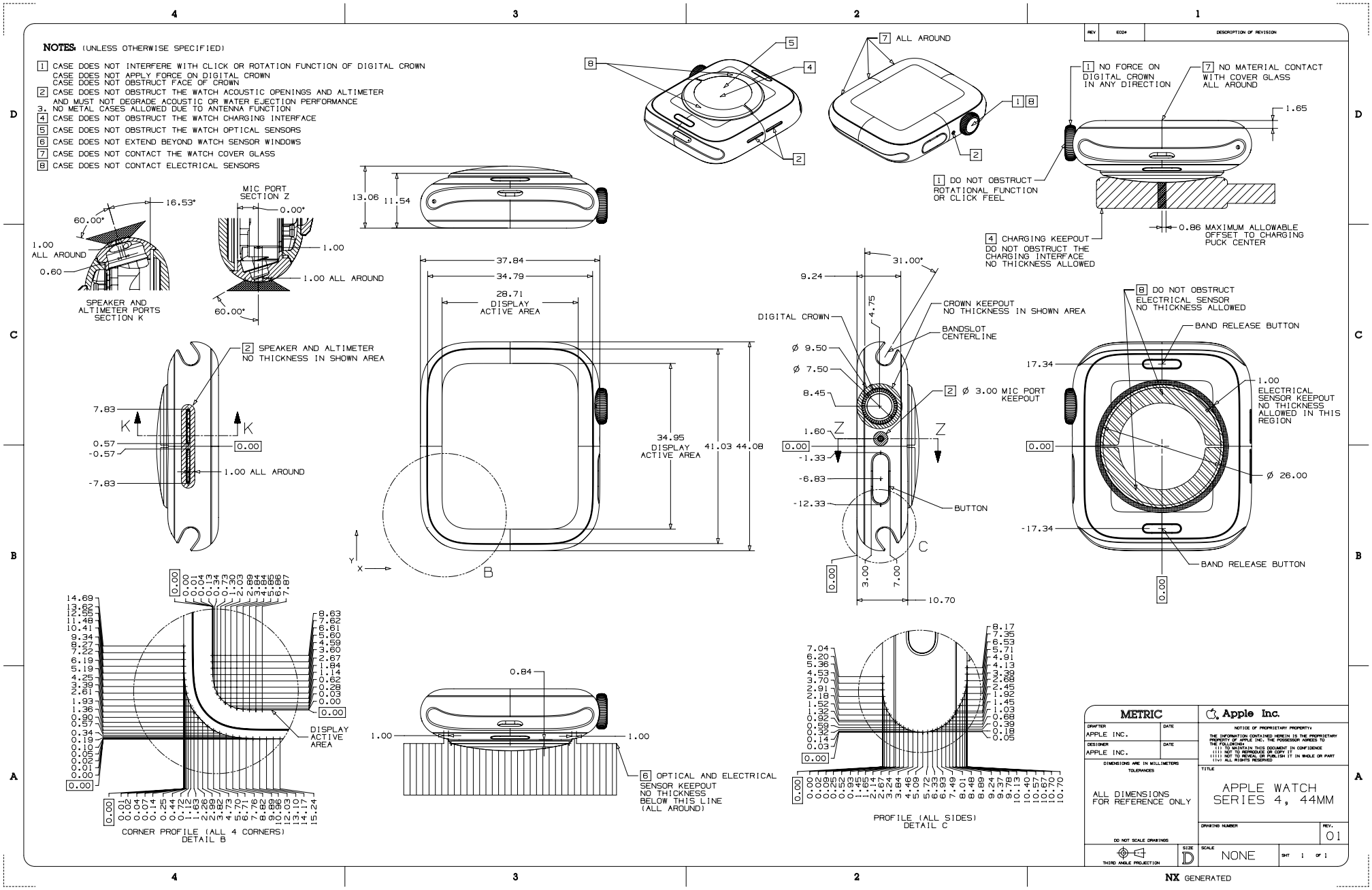

Copyright © 2023 Apple Inc. All Rights Reserved.

56.186 Apple Watch Series 4, 40 mm

[中文]

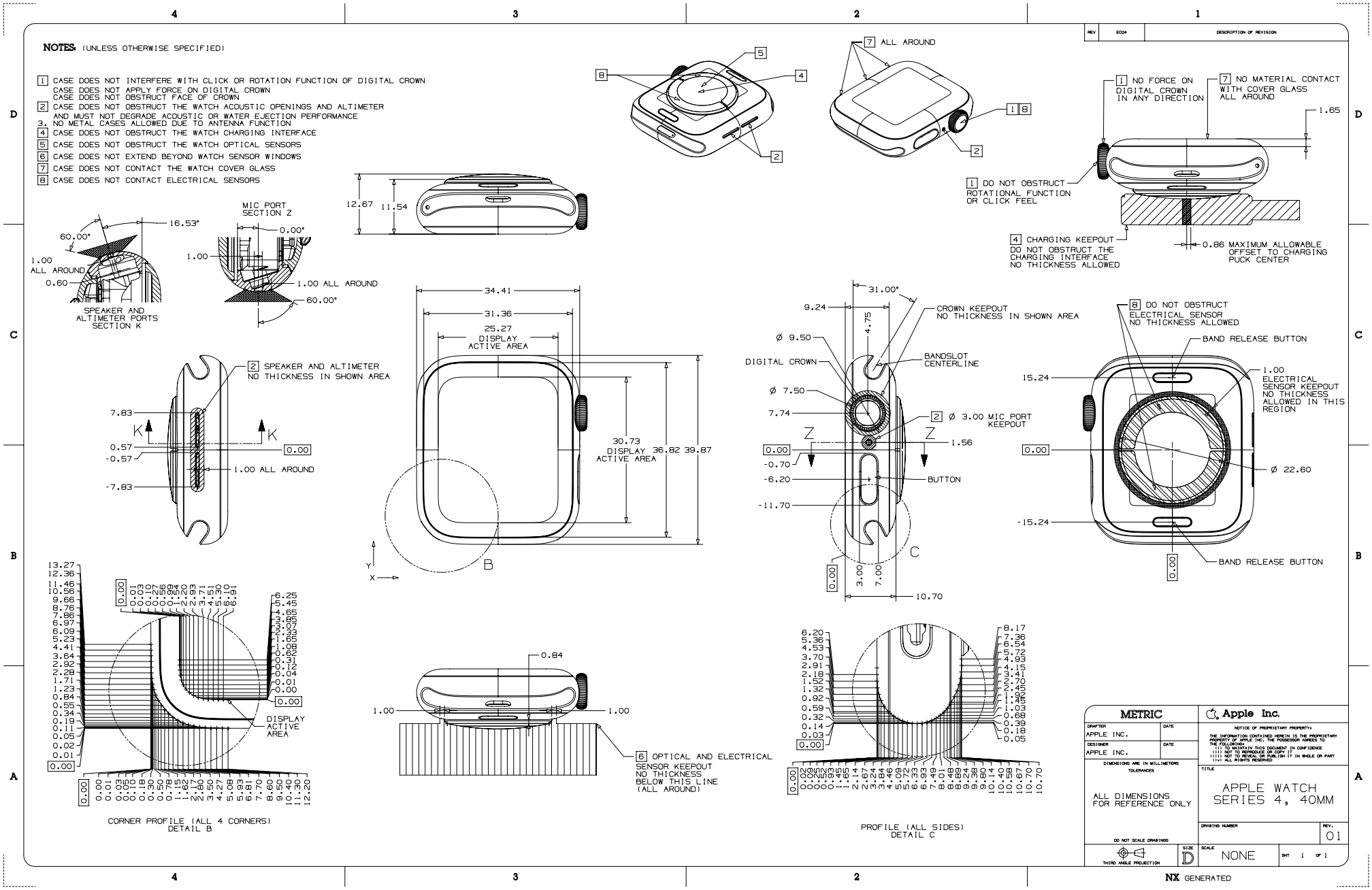

56.187 Apple Watch Series 3 Ceramic, 42 mm

[中文]

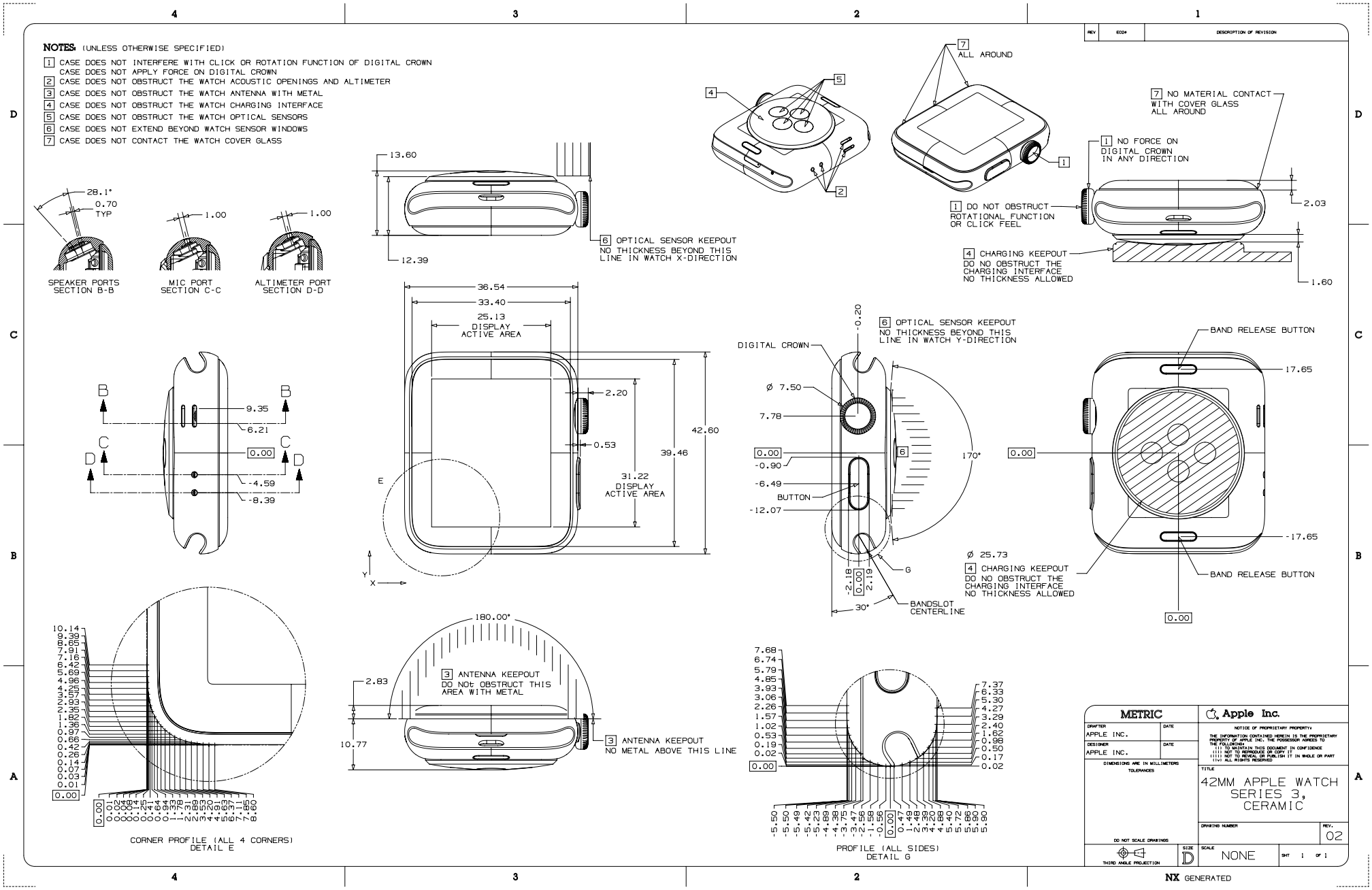

Copyright © 2023 Apple Inc. All Rights Reserved.

56.188 Apple Watch Series 3 Ceramic, 38 mm

[中文]

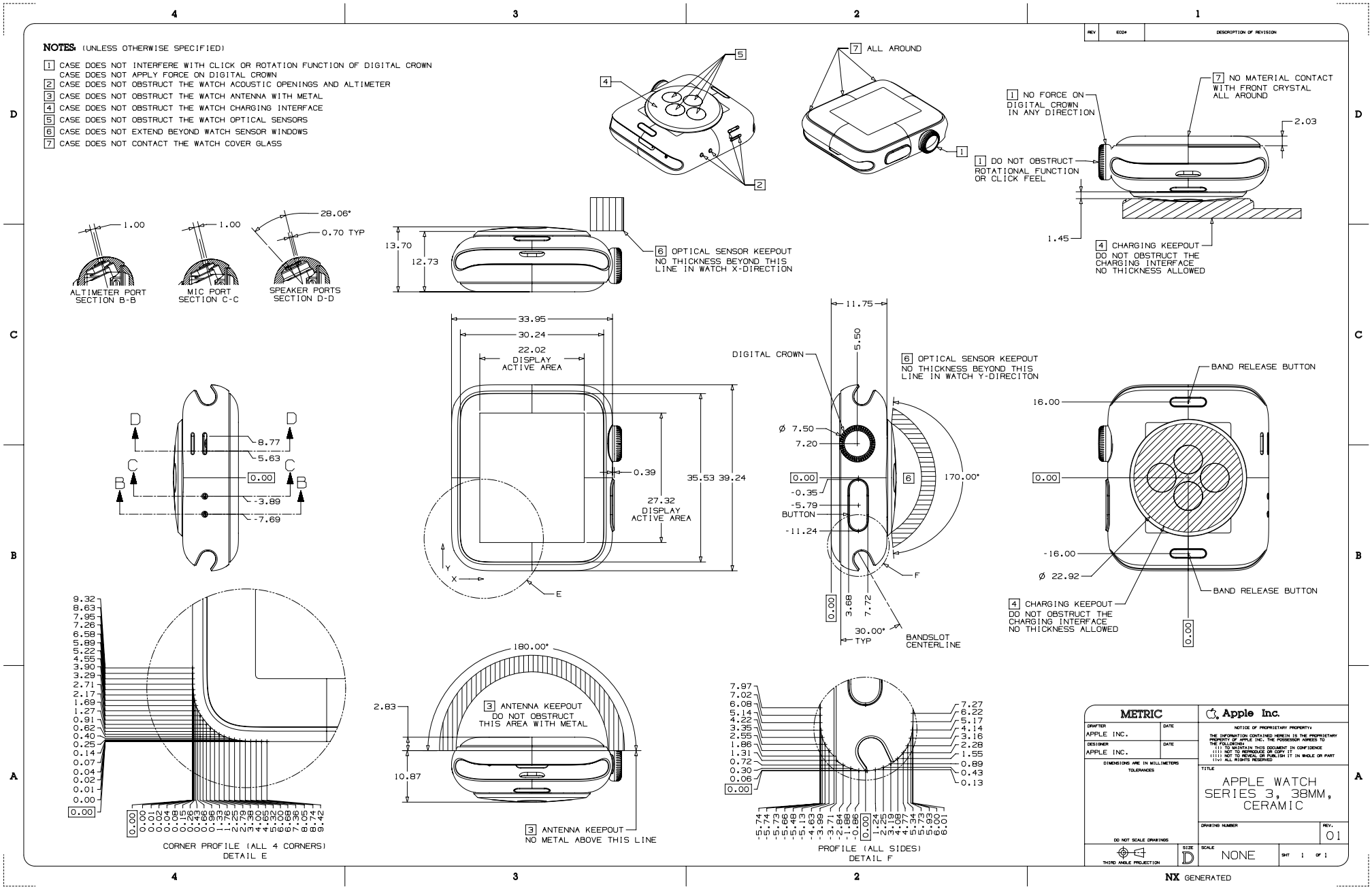

Copyright © 2023 Apple Inc. All Rights Reserved.

56.189 Apple Watch Series 3 Metal, 42 mm

[中文]

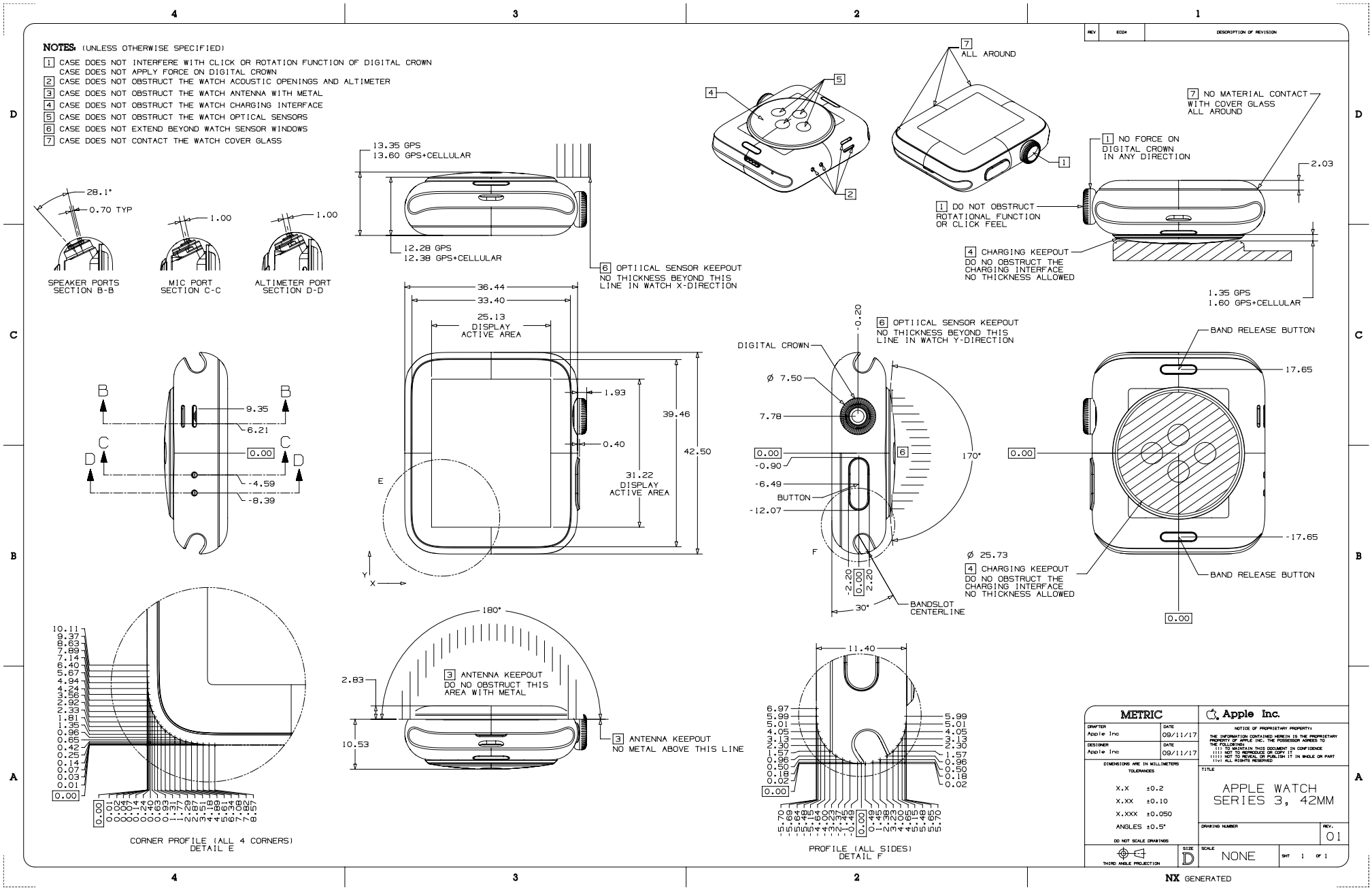

Copyright © 2023 Apple Inc. All Rights Reserved.

56.190 Apple Watch Series 3 Metal, 38 mm

[中文]

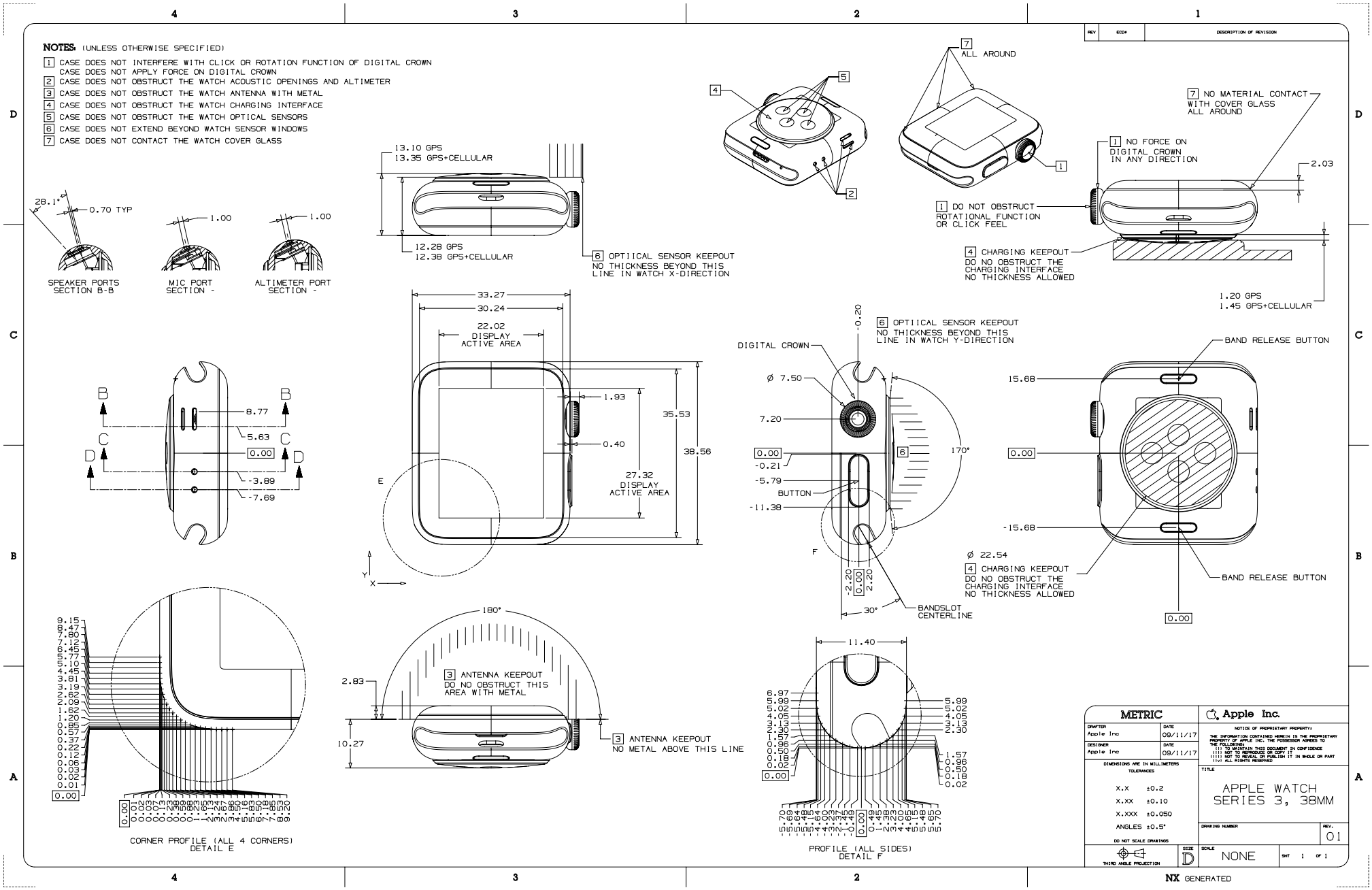

Copyright © 2023 Apple Inc. All Rights Reserved.

56.191 Apple Watch Series 2 Ceramic, 42 mm

[中文]

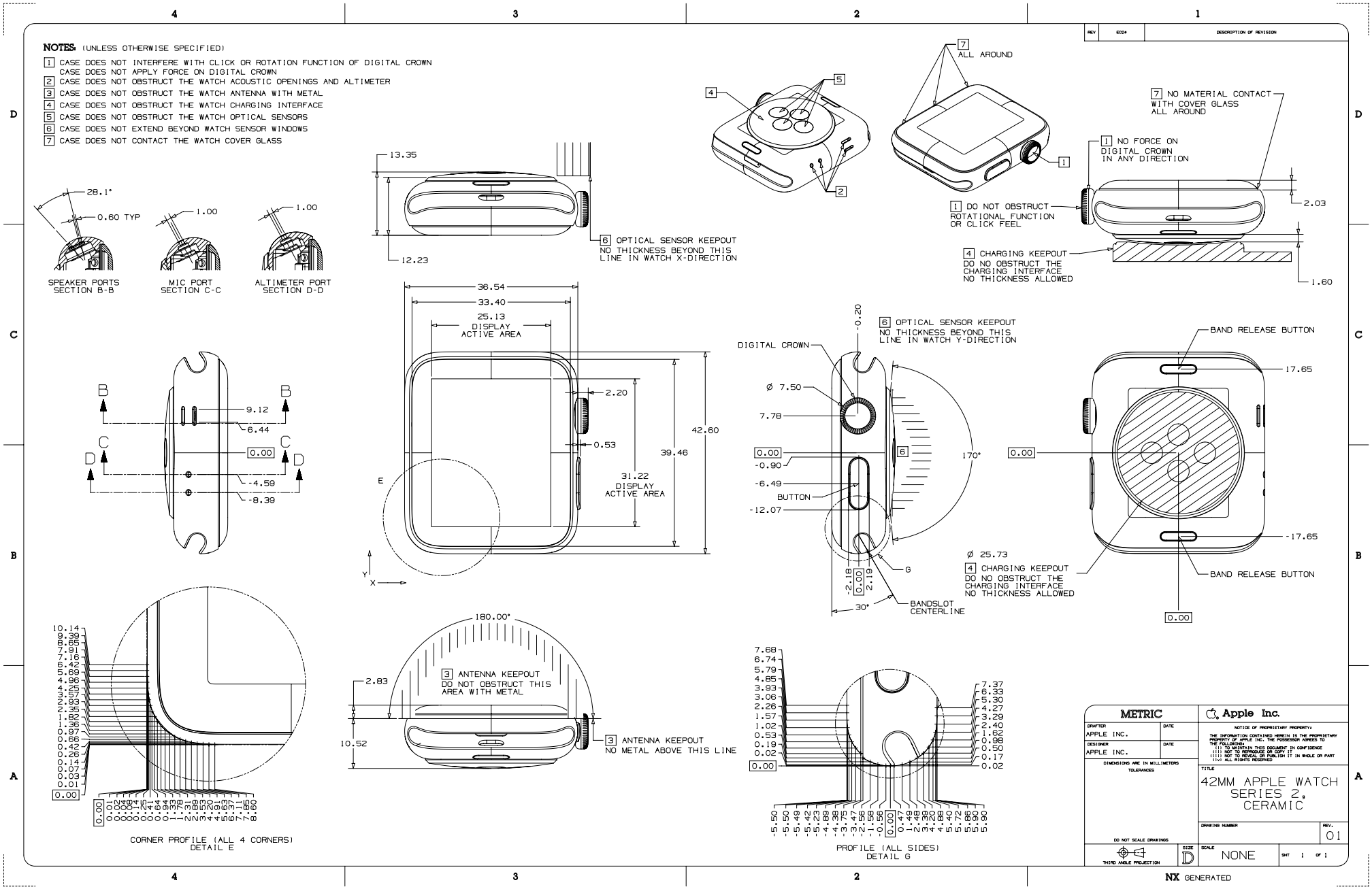
NOTES: (UNLESS OTHERWISE SPECIFIED)
1 CASE DOES NOT INTERFERE WITH CLICK OR ROTATION FUNCTION OF DIGITAL CROWN
CASE DOES NOT APPLY FORCE ON DIGITAL CROWN
2 CASE DOES NOT OBSTRUCT THE WATCH ACOUSTIC OPENINGS AND ALTIMETER
3 CASE DOES NOT OBSTRUCT THE WATCH ANTENNA WITH METAL
4 CASE DOES NOT OBSTRUCT THE WATCH CHARGING INTERFACE
5 CASE DOES NOT OBSTRUCT THE WATCH OPTICAL SENSORS
6 CASE DOES NOT EXTEND BEYOND WATCH SENSOR WINDOWS
7 CASE DOES NOT CONTACT THE WATCH COVER GLASS
REV
ECO#
DESCRIPTION OF REVISION
7 ALL AROUND
7 NO MATERIAL CONTACT WITH COVER GLASS ALL AROUND
1 NO FORCE ON DIGITAL CROWN IN ANY DIRECTION
1 DO NOT OBSTRUCT ROTATIONAL FUNCTION OR CLICK FEEL
4 CHARGING KEEPOUT DO NO OBSTRUCT THE CHARGING INTERFACE NO THICKNESS ALLOWED
2.03
1.60
28.1°
0.60 TYP
SPEAKER PORTS SECTION B-B
1.00
MIC PORT SECTION C-C
1.00
ALTIMETER PORT SECTION D-D
13.35
12.23
6 OPTICAL SENSOR KEEPOUT NO THICKNESS BEYOND THIS LINE IN WATCH X-DIRECTION
36.54
33.40
25.13 DISPLAY ACTIVE AREA
2.20
0.53
42.60
39.46
31.22 DISPLAY ACTIVE AREA
9.12
6.44
0.00
-4.59
-8.39
6 OPTICAL SENSOR KEEPOUT NO THICKNESS BEYOND THIS LINE IN WATCH Y-DIRECTION
DIGITAL CROWN
Ø 7.50
7.78
0.00
-0.90
-6.49
BUTTON
-12.07
170°
-0.20
-2.18
0.00
2.19
30°
BANDSLOT CENTERLINE
G
Ø 25.73
4 CHARGING KEEPOUT DO NO OBSTRUCT THE CHARGING INTERFACE NO THICKNESS ALLOWED
BAND RELEASE BUTTON
17.65
0.00
-17.65
BAND RELEASE BUTTON
0.00
10.14
9.39
8.65
7.91
7.16
6.42
5.69
4.96
4.25
3.57
2.93
2.35
1.82
1.36
0.97
0.66
0.42
0.26
0.14
0.07
0.03
0.01
0.00
0.00 0.01 0.02 0.04 0.08 0.14 0.25 0.41 0.64 0.94 1.33 1.78 2.31 2.93 3.63 4.42 5.30 6.27 7.33 8.48 9.72 11.05 12.47 13.98 15.58 17.27 19.05 20.92 22.88 24.93 27.07 29.30 31.62 34.03 36.53 39.12 41.80 44.57 47.43 50.38 53.42 56.55 59.77 63.08 66.48 69.97 73.55 77.22 80.98 84.83 88.77 92.80 96.92 101.13 105.43 109.82 114.30 118.87 123.53 128.28 133.12 138.05 143.07 148.18 153.38 158.67 164.05 169.52 175.08 180.73 186.47 192.30 198.22 204.23 210.33 216.52 222.80 229.17 235.63 242.18 248.82 255.55 262.37 269.28 276.28 283.37 290.55 297.82 305.18 312.63 320.17 327.80 335.52 343.33 351.23 359.22 367.30 375.47 383.73 392.08 400.52 409.05 417.67 426.38 435.18 444.07 453.05 462.12 471.28 480.53 489.87 499.30 508.82 518.43 528.13 537.92 547.80 557.77 567.83 577.98 588.22 598.55 608.97 619.48 630.08 640.77 651.55 662.42 673.38 684.43 695.57 706.80 718.12 729.53 741.03 752.62 764.30 776.07 787.93 799.88 811.92 824.05 836.27 848.58 860.98 873.47 886.05 898.72 911.48 924.33 937.27 950.30 963.42 976.63 989.93 1003.32 1016.80 1030.37 1044.03 1057.78 1071.62 1085.55 1099.57 1113.68 1127.88 1142.17 1156.55 1171.02 1185.58 1200.23 1214.97 1229.80 1244.72 1259.73 1274.83 1290.02 1305.30 1320.67 1336.13 1351.68 1367.32 1383.05 1398.87 1414.78 1430.78 1446.87 1463.05 1479.32 1495.68 1512.13 1528.67 1545.30 1562.02 1578.83 1595.73 1612.72 1629.80 1646.97 1664.23 1681.58 1699.02 1716.55 1734.17 1751.88 1769.68 1787.57 1805.55 1823.62 1841.78 1860.03 1878.37 1896.80 1915.32 1933.93 1952.63 1971.42 1990.30 2009.27 2028.33 2047.48 2066.72 2086.05 2105.47 2124.98 2144.58 2164.27 2184.05 2203.92 2223.88 2243.93 2264.07 2284.30 2304.62 2325.03 2345.53 2366.12 2386.80 2407.57 2428.43 2449.38 2470.42 2491.55 2512.77 2534.08 2555.48 2576.97 2598.55 2620.22 2641.98 2663.83 2685.77 2707.80 2729.92 2752.13 2774.43 2796.82 2819.30 2841.87 2864.53 2887.28 2910.12 2933.05 2956.07 2979.18 3002.38 3025.67 3049.05 3072.52 3096.08 3119.73 3143.47 3167.30 3191.22 3215.23 3239.33 3263.52 3287.80 3312.17 3336.63 3361.18 3385.82 3410.55 3435.37 3460.28 3485.28 3510.37 3535.55 3560.82 3586.18 3611.63 3637.17 3662.80 3688.52 3714.33 3740.23 3766.22 3792.30 3818.47 3844.73 3871.08 3897.52 3924.05 3950.67 3977.38 4004.18 4031.07 4058.05 4085.12 4112.28 4139.53 4166.87 4194.30 4221.82 4249.43 4277.13 4304.92 4332.80 4360.77 4388.83 4416.98 4445.22 4473.55 4501.97 4530.48 4559.08 4587.77 4616.55 4645.42 4674.38 4703.43 4732.57 4761.80 4791.12 4820.53 4850.03 4879.62 4909.30 4939.07 4968.93 4998.88 5028.92 5059.05 5089.27 5119.58 5149.98 5180.47 5211.05 5241.72 5272.48 5303.33 5334.27 5365.30 5396.42 5427.63 5458.93 5490.32 5521.80 5553.37 5585.03 5616.78 5648.62 5680.55 5712.57 5744.68 5776.88 5809.17 5841.55 5874.02 5906.58 5939.23 5971.97 6004.80 6037.72 6070.73 6103.83 6137.02 6170.30 6203.67 6237.13 6270.68 6304.32 6338.05 6371.87 6405.78 6439.78 6473.87 6508.05 6542.32 6576.68 6611.13 6645.67 6680.30 6715.02 6749.83 6784.73 6819.72 6854.80 6889.97 6925.23 6960.58 6996.02 7031.55 7067.17 7102.88 7138.68 7174.57 7210.55 7246.62 7282.78 7319.03 7355.37 7391.80 7428.32 7464.93 7501.63 7538.42 7575.30 7612.27 7649.33 7686.48 7723.72 7761.05 7798.47 7835.98 7873.58 7911.27 7949.05 7986.92 8024.88 8062.93 8101.07 8139.30 8177.62 8216.03 8254.53 8293.12 8331.80 8370.57 8409.43 8448.38 8487.42 8526.55 8565.77 8605.08 8644.48 8683.97 8723.55 8763.22 8802.98 8842.83 8882.77 8922.80 8962.92 9003.13 9043.43 9083.82 9124.30 9164.87 9205.53 9246.28 9287.12 9328.05 9369.07 9410.18 9451.38 9492.67 9534.05 9575.52 9617.08 9658.73 9700.47 9742.30 9784.22 9826.23 9868.33 9910.52 9952.80 9995.17 10037.63 10080.18 10122.82 10165.55 10208.37 10251.28 10294.28 10337.37 10380.55 10423.82 10467.18 10510.63 10554.17 10597.80 10641.52 10685.33 10729.23 10773.22 10817.30 10861.47 10905.73 10950.08 10994.52 11039.05 11083.67 11128.38 11173.18 11218.07 11263.05 11308.12 11353.28 11398.53 11443.87 11489.30 11534.82 11580.43 11626.13 11671.92 11717.80 11763.77 11809.83 11855.98 11902.22 11948.55 11994.97 12041.48 12088.08 12134.77 12181.55 12228.42 12275.38 12322.43 12369.57 12416.80 12464.12 12511.53 12559.03 12606.62 12654.30 12702.07 12749.93 12797.88 12845.92 12894.05 12942.27 12990.58 13038.98 13087.47 13136.05 13184.72 13233.48 13282.33 13331.27 13380.30 13429.42 13478.63 13527.93 13577.32 13626.80 13676.37 13726.03 13775.78 13825.62 13875.55 13925.57 13975.68 14025.88 14076.17 14126.55 14177.02 14227.58 14278.23 14328.97 14379.80 14430.72 14481.73 14532.83 14584.02 14635.30 14686.67 14738.13 14789.68 14841.32 14893.05 14944.87 14996.78 15048.78 15100.87 15153.05 15205.32 15257.68 15310.13 15362.67 15415.30 15468.02 15520.83 15573.73 15626.72 15679.80 15732.97 15786.23 15839.58 15893.02 15946.55 16000.17 16053.88 16107.68 16161.57 16215.55 16269.62 16323.78 16378.03 16432.37 16486.80 16541.32 16595.93 16650.63 16705.42 16760.30 16815.27 16870.33 16925.48 16980.72 17036.05 17091.47 17146.98 17202.58 17258.27 17314.05 17369.92 17425.88 17481.93 17538.07 17594.30 17650.62 17707.03 17763.53 17820.12 17876.80 17933.57 17990.43 18047.38 18104.42 18161.55 18218.77 18276.08 18333.48 18390.97 18448.55 18506.22 18563.98 18621.83 18679.77 18737.80 18795.92 18854.13 18912.43 18970.82 19029.30 19087.87 19146.53 19205.28 19264.12 19323.05 19382.07 19441.18 19500.38 19559.67 19619.05 19678.52 19738.08 19797.73 19857.47 19917.30 19977.22 20037.23 20097.33 20157.52 20217.80 20278.17 20338.63 20399.18 20459.82 20520.55 20581.37 20642.28 20703.28 20764.37 20825.55 20886.82 20948.18 21009.63 21071.17 21132.80 21194.52 21256.33 21318.23 21380.22 21442.30 21504.47 21566.73 21629.08 21691.52 21754.05 21816.67 21879.38 21942.18 22005.07 22068.05 22131.12 22194.28 22257.53 22320.87 22384.30 22447.82 22511.43 22575.13 22638.92 22702.80 22766.77 22830.83 22894.98 22959.22 23023.55 23087.97 23152.48 23217.08 23281.77 23346.55 23411.42 23476.38 23541.43 23606.57 23671.80 23737.12 23802.53 23868.03 23933.62 23999.30 24065.07 24130.93 24196.88 24262.92 24329.05 24395.27 24461.58 24527.98 24594.47 24661.05 24727.72 24794.48 24861.33 24928.27 24995.30 25062.42 25129.63 25196.93 25264.32 25331.80 25399.37 25467.03 25534.78 25602.62 25670.55 25738.57 25806.68 25874.88 25943.17 26011.55 26080.02 26148.58 26217.23 26285.97 26354.80 26423.72 26492.73 26561.83 26631.02 26700.30 26769.67 26839.13 26908.68 26978.32 27048.05 27117.87 27187.78 27257.78 27327.87 27398.05 27468.32 27538.68 27609.13 27679.67 27750.30 27821.02 27891.83 27962.73 28033.72 28104.80 28175.97 28247.23 28318.58 28390.02 28461.55 28533.17 28604.88 28676.68 28748.57 28820.55 28892.62 28964.78 29037.03 29109.37 29181.80 29254.32 29326.93 29399.63 29472.42 29545.30 29618.27 29691.33 29764.48 29837.72 29911.05 29984.47 30057.98 30131.58 30205.27 30279.05 30352.92 30426.88 30500.93 30575.07 30649.30 30723.62 30798.03 30872.53 30947.12 31021.80 31096.57 31171.43 31246.38 31321.42 31396.55 31471.77 31547.08 31622.48 31697.97 31773.55 31849.22 31924.98 32000.83 32076.77 32152.80 32228.92 32305.13 32381.43 32457.82 32534.30 32610.87 32687.53 32764.28 32841.12 32918.05 32995.07 33072.18 33149.38 33226.67 33304.05 33381.52 33459.08 33536.73 33614.47 33692.30 33770.22 33848.23 33926.33 34004.52 34082.80 34161.17 34239.63 34318.18 34396.82 34475.55 34554.37 34633.28 34712.28 34791.37 34870.55 34949.82 35029.18 35108.63 35188.17 35267.80 35347.52 35427.33 35507.23 35587.22 35667.30 35747.47 35827.73 35908.08 35988.52 36069.05 36149.67 36230.38 36311.18 36392.07 36473.05 36554.12 36635.28 36716.53 36797.87 36879.30 36960.82 37042.43 37124.13 37205.92 37287.80 37369.77 37451.83 37533.98 37616.22 37698.55 37780.97 37863.48 37946.08 38028.77 38111.55 38194.42 38277.38 38360.43 38443.57 38526.80 38610.12 38693.53 38777.03 38860.62 38944.30 39028.07 39111.93 39195.88 39279.92 39364.05 39448.27 39532.58 39616.98 39701.47 39786.05 39870.72 39955.48 40040.33 40125.27 40210.30 40295.42 40380.63 40465.93 40551.32 40636.80 40722.37 40808.03 40893.78 40979.62 41065.55 41151.57 41237.68 41323.88 41410.17 41496.55 41583.02 41669.58 41756.23 41842.97 41929.80 42016.72 42103.73 42190.83 42278.02 42365.30 42452.67 42540.13 42627.68 42715.32 42803.05 42890.87 42978.78 43066.78 43154.87 43243.05 43331.32 43419.68 43508.13 43596.67 43685.30 43774.02 43862.83 43951.73 44040.72 44129.80 44218.97 44308.23 44397.58 44487.02 44576.55 44666.17 44755.88 44845.68 44935.57 45025.55 45115.62 45205.78 45296.03 45386.37 45476.80 45567.32 45657.93 45748.63 45839.42 45930.30 46021.27 46112.33 46203.48 46294.72 46386.05 46477.47 46568.98 46660.58 46752.27 46844.05 46935.92 47027.88 47119.93 47212.07 47304.30 47396.62 47489.03 47581.53 47674.12 47766.80 47859.57 47952.43 48045.38 48138.42 48231.55 48324.77 48418.08 48511.48 48604.97 48698.55 48792.22 48885.98 48979.83 49073.77 49167.80 49261.92 49356.13 49450.43 49544.82 49639.30 49733.87 49828.53 49923.28 50018.12 50113.05 50208.07 50303.18 50398.38 50493.67 50589.05 50684.52 50780.08 50875.73 50971.47 51067.30 51163.22 51259.23 51355.33 51451.52 51547.80 51644.17 51740.63 51837.18 51933.82 52030.55 52127.37 52224.28 52321.28 52418.37 52515.55 52612.82 52710.18 52807.63 52905.17 53002.80 53100.52 53198.33 53296.23 53394.22 53492.30 53590.47 53688.73 53787.08 53885.52 53984.05 54082.67 54181.38 54280.18 54379.07 54478.05 54577.12 54676.28 54775.53 54874.87 54974.30 55073.82 55173.43 55273.13 55372.92 55472.80 55572.77 55672.83 55772.98 55873.22 55973.55 56073.97 56174.48 56275.08 56375.77 56476.55 56577.42 56678.38 56779.43 56880.57 56981.80 57083.12 57184.53 57286.03 57387.62 57489.30 57591.07 57692.93 57794.88 57896.92 57999.05 58101.27 58203.58 58305.98 58408.47 58511.05 58613.72 58716.48 58819.33 58922.27 59025.30 59128.42 59231.63 59334.93 59438.32 59541.80 59645.37 59749.03 59852.78 59956.62 60060.55 60164.57 60268.68 60372.88 60477.17 60581.55 60686.02 60790.58 60895.23 60999.97 61104.80 61209.72 61314.73 61419.83 61525.02 61630.30 61735.67 61841.13 61946.68 62052.32 62158.05 62263.87 62369.78 62475.78 62581.87 62688.05 62794.32 62900.68 63007.13 63113.67 63220.30 63327.02 63433.83 63540.73 63647.72 63754.80 63861.97 63969.23 64076.58 64184.02 64291.55 64399.17 64506.88 64614.68 64722.57 64830.55 64938.62 65046.78 65155.03 65263.37 65371.80 65480.32 65588.93 65697.63 65806.42 65915.30 66024.27 66133.33 66242.48 66351.72 66461.05 66570.47 66679.98 66789.58 66899.27 67009.05 67118.92 67228.88 67338.93 67449.07 67559.30 67669.62 67780.03 67890.53 68001.12 68111.80 68222.57 68333.43 68444.38 68555.42 68666.55 68777.77 68889.08 69000.48 69111.97 69223.55 69335.22 69446.98 69558.83 69670.77 69782.80 69894.92 70007.13 70119.43 70231.82 70344.30 70456.87 70569.53 70682.28 70795.12 70908.05 71021.07 71134.18 71247.38 71360.67 71474.05 71587.52 71701.08 71814.73 71928.47 72042.30 72156.22 72270.23 72384.33 72498.52 72612.80 72727.17 72841.63 72956.18 73070.82 73185.55 73300.37 73415.28 73530.28 73645.37 73760.55 73875.82 73991.18 74106.63 74222.17 74337.80 74453.52 74569.33 74685.23 74801.22 74917.30 75033.47 75149.73 75266.08 75382.52 75499.05 75615.67 75732.38 75849.18 75966.07 76083.05 76200.12 76317.28 76434.53 76551.87 76669.30 76786.82 76904.43 77022.13 77139.92 77257.80 77375.77 77493.83 77611.98 77730.22 77848.55 77966.97 78085.48 78204.08 78322.77 78441.55 78560.42 78679.38 78798.43 78917.57 79036.80 79156.12 79275.53 79395.03 79514.62 79634.30 79754.07 79873.93 79993.88 80113.92 80234.05 80354.27 80474.58 80594.98 80715.47 80836.05 80956.72 81077.48 81198.33 81319.27 81440.30 81561.42 81682.63 81803.93 81925.32 82046.80 82168.37 82290.03 82411.78 82533.62 82655.55 82777.57 82899.68 83021.88 83144.17 83266.55 83389.02 83511.58 83634.23 83756.97 83879.80 84002.72 84125.73 84248.83 84372.02 84495.30 84618.67 84742.13 84865.68 84989.32 85113.05 85236.87 85360.78 85484.78 85608.87 85733.05 85857.32 85981.68 86106.13 86230.67 86355.30 86480.02 86604.83 86729.73 86854.72 86979.80 87104.97 87230.23 87355.58 87481.02 87606.55 87732.17 87857.88 87983.68 88109.57 88235.55 88361.62 88487.78 88614.03 88740.37 88866.80 88993.32 89119.93 89246.63 89373.42 89500.30 89627.27 89754.33 89881.48 90008.72 90136.05 90263.47 90390.98 90518.58 90646.27 90774.05 90901.92 91029.88 91157.93 91286.07 91414.30 91542.62 91671.03 91799.53 91928.12 92056.80 92185.57 92314.43 92443.38 92572.42 92701.55 92830.77 92960.08 93089.48 93218.97 93348.55 93478.22 93607.98 93737.83 93867.77 93997.80 94127.92 94258.13 94388.43 94518.82 94649.30 94779.87 94910.53 95041.28 95172.12 95303.05 95434.07 95565.18 95696.38 95827.67 95959.05 96090.52 96222.08 96353.73 96485.47 96617.30 96749.22 96881.23 97013.33 97145.52 97277.80 97410.17 97542.63 97675.18 97807.82 97940.55 98073.37 98206.28 98339.28 98472.37 98605.55 98738.82 98872.18 99005.63 99139.17 99272.80 99406.52 99540.33 99674.23 99808.22 99942.30 100076.47 100210.73 100345.08 100479.52 100614.05 100748.67 100883.38 101018.18 101153.07 101288.05 101423.12 101558.28 101693.53 101828.87 101964.30 102099.82 102235.43 102371.13 102506.92 102642.80 102778.77 102914.83 103050.98 103187.22 103323.55 103459.97 103596.48 103733.08 103869.77 104006.55 104143.42 104280.38 104417.43 104554.57 104691.80 104829.12 104966.53 105104.03 105241.62 105379.30 105517.07 105654.93 105792.88 105930.92 106069.05 106207.27 106345.58 106483.98 106622.47 106761.05 106899.72 107038.48 107177.33 107316.27 107455.30 107594.42 107733.63 107872.93 108012.32 108151.80 108291.37 108431.03 108570.78 108710.62 108850.55 108990.57 109130.68 109270.88 109411.17 109551.55 109692.02 109832.58 109973.23 110113.97 110254.80 110395.72 110536.73 110677.83 110819.02 110960.30 111101.67 111243.13 111384.68 111526.32 111668.05 111809.87 111951.78 112093.78 112235.87 112378.05 112520.32 112662.68 112805.13 112947.67 113090.30 113233.02 113375.83 113518.73 113661.72 113804.80 113947.97 114091.23 114234.58 114378.02 114521.55 114665.17 114808.88 114952.68 115096.57 115240.55 115384.62 115528.78 115673.03 115817.37 115961.80 116106.32 116250.93 116395.63 116540.42 116685.30 116830.27 116975.33 117120.48 117265.72 117411.05 117556.47 117701.98 117847.58 117993.27 118139.05 118284.92 118430.88 118576.93 118723.07 118869.30 119015.62 119162.03 119308.53 119455.12 119601.80 119748.57 119895.43 120042.38 120189.42 120336.55 120483.77 120631.08 120778.48 120925.97 121073.55 121221.22 121368.98 121516.83 121664.77 121812.80 121960.92 122109.13 122257.43 122405.82 122554.30 122702.87 122851.53 123000.28 123149.12 123298.05 123447.07 123596.18 123745.38 123894.67 124044.05 124193.52 124343.08 124492.73 124642.47 124792.30 124942.22 125092.23 125242.33 125392.52 125542.80 125693.17 125843.63 125994.18 126144.82 126295.55 126446.37 126597.28 126748.28 126899.37 127050.55 127201.82 127353.18 127504.63 127656.17 127807.80 127959.52 128111.33 128263.23 128415.22 128567.30 128719.47 128871.73 129024.08 129176.52 129329.05 129481.67 129634.38 129787.18 129940.07 130093.05 130246.12 130399.28 130552.53 130705.87 130859.30 131012.82 131166.43 131320.13 131473.92 131627.80 131781.77 131935.83 132089.98 132244.22 132398.55 132552.97 132707.48 132862.08 133016.77 133171.55 133326.42 133481.38 133636.43 133791.57 133946.80 134102.12 134257.53 134413.03 134568.62 134724.30 134880.07 135035.93 135191.88 135347.92 135504.05 135660.27 135816.58 135972.98 136129.47 136286.05 136442.72 136599.48 136756.33 136913.27 137070.30 137227.42 137384.63 137541.93 137699.32 137856.80 138014.37 138172.03 138329.78 138487.62 138645.55 138803.57 138961.68 139119.88 139278.17 139436.55 139595.02 139753.58 139912.23 140070.97 140229.80 140388.72 140547.73 140706.83 140866.02 141025.30 141184.67 141344.13 141503.68 141663.32 141823.05 141982.87 142142.78 142302.78 142462.87 142623.05 142783.32 142943.68 143104.13 143264.67 143425.30 143586.02 143746.83 143907.73 144068.72 144229.80 144390.97 144552.23 144713.58 144875.02 145036.55 145198.17 145359.88 145521.68 145683.57 145845.55 146007.62 146169.78 146332.03 146494.37 146656.80 146819.32 146981.93 147144.63 147307.42 147470.30 147633.27 147796.33 147959.48 148122.72 148286.05 148449.47 148612.98 148776.58 148940.27 149104.05 149267.92 149431.88 149595.93 149760.07 149924.30 150088.62 150253.03 150417.53 150582.12 150746.80 150911.57 151076.43 151241.38 151406.42 151571.55 151736.77 151902.08 152067.48 152232.97 152398.55 152564.22 152729.98 152895.83 153061.77 153227.80 153393.92 153560.13 153726.43 153892.82 154059.30 154225.87 154392.53 154559.28 154726.12 154893.05 155060.07 155227.18 155394.38 155561.67 155729.05 155896.52 156064.08 156231.73 156399.47 156567.30 156735.22 156903.23 157071.33 157239.52 157407.80 157576.17 157744.63 157913.18 158081.82 158250.55 158419.37 158588.28 158757.28 158926.37 159095.55 159264.82 159434.18 159603.63 159773.17 159942.80 160112.52 160282.33 160452.23 160622.22 160792.30 160962.47 161132.73 161303.08 161473.52 161644.05 161814.67 161985.38 162156.18 162327.07 162498.05 162669.12 162840.28 163011.53 163182.87 163354.30 163525.82 163697.43 163869.13 164040.92 164212.80 164384.77 164556.83 164728.98 164901.22 165073.55 165245.97 165418.48 165591.08 165763.77 165936.55 166109.42 166282.38 166455.43 166628.57 166801.80 166975.12 167148.53 167322.03 167495.62 167669.30 167843.07 168016.93 168190.88 168364.92 168539.05 168713.27 168887.58 169061.98 169236.47 169411.05 169585.72 169760.48 169935.33 170110.27 170285.30 170460.42 170635.63 170810.93 170986.32 171161.80 171337.37 171513.03 171688.78 171864.62 172040.55 172216.57 172392.68 172568.88 172745.17 172921.55 173098.02 173274.58 173451.23 173627.97 173804.80 173981.72 174158.73 174335.83 174513.02 174690.30 174867.67 175045.13 175222.68 175400.32 175578.05 175755.87 175933.78 176111.78 176289.87 176468.05 176646.32 176824.68 177003.13 177181.67 177360.30 177539.02 177717.83 177896.73 178075.72 178254.80 178433.97 178613.23 178792.58 178972.02 179151.55 179331.17 179510.88 179690.68 179870.57 180050.55 180230.62 180410.78 180591.03 180771.37 180951.80 181132.32 181312.93 181493.63 181674.42 181855.30 182036.27 182217.33 182398.48 182579.72 182761.05 182942.47 183123.98 183305.58 183487.27 183669.05 183850.92 184032.88 184214.93 184397.07 184579.30 184761.62 184944.03 185126.53 185309.12 185491.80 185674.57 185857.43 186040.38 186223.42 186406.55 186589.77 186773.08 186956.48 187139.97 187323.55 187507.22 187690.98 187874.83 188058.77 188242.80 188426.92 188611.13 188795.43 188979.82 189164.30 189348.87 189533.53 189718.28 189903.12 190088.05 190273.07 190458.18 190643.38 190828.67 191014.05 191199.52 191385.08 191570.73 191756.47 191942.30 192128.22 192314.23 192500.33 192686.52 192872.80 193059.17 193245.63 193432.18 193618.82 193805.55 193992.37 194179.28 194366.28 194553.37 194740.55 194927.82 195115.18 195302.63 195490.17 195677.80 195865.52 196053.33 196241.23 196429.22 196617.30 196805.47 196993.73 197182.08 197370.52 197559.05 197747.67 197936.38 198125.18 198314.07 198503.05 198692.12 198881.28 199070.53 199259.87 199449.30 199638.82 199828.43 200018.13 200207.92 200397.80 200587.77 200777.83 200967.98 201158.22 201348.55 201538.97 201729.48 201920.08 202110.77 202301.55 202492.42 202683.38 202874.43 203065.57 203256.80 203448.12 203639.53 203831.03 204022.62 204214.30 204406.07 204597.93 204789.88 204981.92 205174.05 205366.27 205558.58 205750.98 205943.47 206136.05 206328.72 206521.48 206714.33 206907.27 207100.30 207293.42 207486.63 207679.93 207873.32 208066.80 208260.37 208454.03 208647.78 208841.62 209035.55 209229.57 209423.68 209617.88 209812.17 210006.55 210201.02 210395.58 210590.23 210784.97 210979.80 211174.72 211369.73 211564.83 211760.02 211955.30 212150.67 212346.13 212541.68 212737.32 212933.05 213128.87 213324.78 213520.78 213716.87 213913.05 214109.32 214305.68 214502.13 214698.67 214895.30 215092.02 215288.83 215485.73 215682.72 215879.80 216076.97 216274.23 216471.58 216669.02 216866.55 217064.17 217261.88 217459.68 217657.57 217855.55 218053.62 218251.78 218450.03 218648.37 218846.80 219045.32 219243.93 219442.63 219641.42 219840.30 220039.27 220238.33 220437.48 220636.72 220836.05 221035.47 221234.98 221434.58 221634.27 221834.05 222033.92 222233.88 222433.93 222634.07 222834.30 223034.62 223235.03 223435.53 223636.12 223836.80 224037.57 224238.43 224439.38 224640.42 224841.55 225042.77 225244.08 225445.48 225646.97 225848.55 226050.22 226251.98 226453.83 226655.77 226857.80 227059.92 227262.13 227464.43 227666.82 227869.30 228071.87 228274.53 228477.28 228680.12 228883.05 229086.07 229289.18 229492.38 229695.67 229899.05 230102.52 230306.08 230509.73 230713.47 230917.30 231121.22 231325.23 231529.33 231733.52 231937.80 232142.17 232346.63 232551.18 232755.82 232960.55 233165.37 233370.28 233575.28 233780.37 233985.55 234190.82 234396.18 234601.63 234807.17 235012.80 235218.52 235424.33 235630.23 235836.22 236042.30 236248.47 236454.73 236661.08 236867.52 237074.05 237280.67 237487.38 237694.18 237901.07 238108.05 238315.12 238522.28 238729.53 238936.87 239144.30 239351.82 239559.43 239767.13 239974.92 240182.80 240390.77 240598.83 240806.98 241015.22 241223.55 241431.97 241640.48 241849.08 242057.77 242266.55 242475.42 242684.38 242893.43 243102.57 243311.80 243521.12 243730.53 243940.03 244149.62 244359.30 244569.07 244778.93 244988.88 245198.92 245409.05 245619.27 245829.58 246039.98 246250.47 246461.05 246671.72 246882.48 247093.33 247304.27 247515.30 247726.42 247937.63 248148.93 248360.32 248571.80 248783.37 248995.03 249206.78 249418.62 249630.55 249842.57 250054.68 250266.88 250479.17 250691.55 250904.02 251116.58 251329.23 251541.97 251754.80 251967.72 252180.73 252393.83 252607.02 252820.30 253033.67 253247.13 253460.68 253674.32 253888.05 254101.87 254315.78 254529.78 254743.87 254958.05 255172.32 255386.68 255601.13 255815.67 256030.30 256245.02 256459.83 256674.73 256889.72 257104.80 257319.97 257535.23 257750.58 257966.02 258181.55 258397.17 258612.88 258828.68 259044.57 259260.55 259476.62 259692.78 259909.03 260125.37 260341.80 260558.32 260774.93 260991.63 261208.42 261425.30 261642.27 261859.33 262076.48 262293.72 262511.05 262728.47 262945.98 263163.58 263381.27 263599.05 263816.92 264034.88 264252.93 264471.07 264689.30 264907.62 265126.03 265344.53 265563.12 265781.80 266000.57 266219.43 266438.38 266657.42 266876.55 267095.77 267315.08 267534.48 267753.97 267973.55 268193.22 268412.98 268632.83 268852.77 269072.80 269292.92 269513.13 269733.43 269953.82 270174.30 270394.87 270615.53 270836.28 271057.12 271278.05 271499.07 271720.18 271941.38 272162.67 272384.05 272605.52 272827.08 273048.73 273270.47 273492.30 273714.22 273936.23 274158.33 274380.52 274602.80 274825.17 275047.63 275270.18 275492.82 275715.55 275938.37 276161.28 276384.28 276607.37 276830.55 277053.82 277277.18 277500.63 277724.17 277947.80 278171.52 278395.33 278619.23 278843.22 279067.30 279291.47 279515.73 279740.08 279964.52 280189.05 280413.67 280638.38 280863.18 281088.07 281313.05 281538.12 281763.28 281988.53 282213.87 282439.30 282664.82 282890.43 283116.13 283341.92 283567.80 283793.77 284019.83 284245.98 284472.22 284698.55 284924.97 285151.48 285378.08 285604.77 285831.55 286058.42 286285.38 286512.43 286739.57 286966.80 287194.12 287421.53 287649.03 287876.62 288104.30 288332.07 288559.93 288787.88 289015.92 289244.05 289472.27 289700.58 289928.98 290157.47 290386.05 290614.72 290843.48 291072.33 291301.27 291530.30 291759.42 291988.63 292217.93 292447.32 292676.80 292906.37 293136.03 293365.78 293595.62 293825.55 294055.57 294285.68 294515.88 294746.17 294976.55 295207.02 295437.58 295668.23 295898.97 296129.80 296360.72 296591.73 296822.83 297054.02 297285.30 297516.67 297748.13 297979.68 298211.32 298443.05 298674.87 298906.78 299138.78 299370.87 299603.05 299835.32 300067.68 300300.13 300532.67 300765.30 300998.02 301230.83 301463.73 301696.72 301929.80 302162.97 302396.23 302629.58 302863.02 303096.55 303330.17 303563.88 303797.68 304031.57 304265.55 304499.62 304733.78 304968.03 305202.37 305436.80 305671.32 305905.93 306140.63 306375.42 306610.30 306845.27 307080.33 307315.48 307550.72 307786.05 308021.47 308256.98 308492.58 308728.27 308964.05 309199.92 309435.88 309671.93 309908.07 310144.30 310380.62 310617.03 310853.53 311090.12 311326.80 311563.57 311800.43 312037.38 312274.42 312511.55 312748.77 312986.08 313223.48 313460.97 313698.55 313936.22 314173.98 314411.83 314649.77 314887.80 315125.92 315364.13 315602.43 315840.82 316079.30 316317.87 316556.53 316795.28 317034.12 317273.05 317512.07 317751.18 317990.38 318229.67 318469.05 318708.52 318948.08 319187.73 319427.47 319667.30 319907.22 320147.23 320387.33 320627.52 320867.80 321108.17 321348.63 321589.18 321829.82 322070.55 322311.37 322552.28 322793.28 323034.37 323275.55 323516.82 323758.18 323999.63 324241.17 324482.80 324724.52 324966.33 325208.23 325450.22 325692.30 325934.47 326176.73 326419.08 326661.52 326904.05 327146.67 327389.38 327632.18 327875.07 328118.05 328361.12 328604.28 328847.53 329090.87 329334.30 329577.82 329821.43 330065.13 330308.92 330552.80 330796.77 331040.83 331284.98 331529.22 331773.55 332017.97 332262.48 332507.08 332751.77 332996.55 333241.42 333486.38 333731.43 333976.57 334221.80 334467.12 334712.53 334958.03 335203.62 335449.30 335695.07 335940.93 336186.88 336432.92 336679.05 336925.27 337171.58 337417.98 337664.47 337911.05 338157.72 338404.48 338651.33 338898.27 339145.30 339392.42 339639.63 339886.93 340134.32 340381.80 340629.37 340877.03 341124.78 341372.62 341620.55 341868.57 342116.68 342364.88 342613.17 342861.55 343110.02 343358.58 343607.23 343855.97 344104.80 344353.72 344602.73 344851.83 345101.02 345350.30 345599.67 345849.13 346098.68 346348.32 346598.05 346847.87 347097.78 347347.78 347597.87 347848.05 348098.32 348348.68 348599.13 348849.67 349100.30 349351.02 349601.83 349852.73 350103.72 350354.80 350605.97 350857.23 351108.58 351360.02 351611.55 351863.17 352114.88 352366.68 352618.57 352870.55 353122.62 353374.78 353627.03 353879.37 354131.80 354384.32 354636.93 354889.63 355142.42 355395.30 355648.27 355901.33 356154.48 356407.72 356661.05 356914.47 357167.98 357421.58 357675.27 357929.05 358182.92 358436.88 358690.93 358945.07 359199.30 359453.62 359708.03 359962.53 360217.12 360471.80 360726.57 360981.43 361236.38 361491.42 361746.55 362001.77 362257.08 362512.48 362767.97 363023.55 363279.22 363534.98 363790.83 364046.77 364302.80 364558.92 364815.13 365071.43 365327.82 365584.30 365840.87 366097.53 366354.28 366611.12 366868.05 367125.07 367382.18 367639.38 367896.67 368154.05 368411.52 368669.08 368926.73 369184.47 369442.30 369700.22 369958.23 370216.33 370474.52 370732.80 370991.17 371249.63 371508.18 371766.82 372025.55 372284.37 372543.28 372802.28 373061.37 373320.55 373579.82 373839.18 374098.63 374358.17 374617.80 374877.52 375137.33 375397.23 375657.22 375917.30 376177.47 376437.73 376698.08 376958.52 377219.05 377479.67 377740.38 378001.18 378262.07 378523.05 378784.12 379045.28 379306.53 379567.87 379829.30 380090.82 380352.43 380614.13 380875.92 381137.80 381399.77 381661.83 381923.98 382186.22 382448.55 382710.97 382973.48 383236.08 383498.77 383761.55 384024.42 384287.38 384550.43 384813.57 385076.80 385340.12 385603.53 385867.03 386130.62 386394.30 386658.07 386921.93 387185.88 387449.92 387714.05 387978.27 388242.58 388506.98 388771.47 389036.05 389300.72 389565.48 389830.33 390095.27 390360.30 390625.42 390890.63 391155.93 391421.32 391686.80 391952.37 392218.03 392483.78 392749.62 393015.55 393281.57 393547.68 393813.88 394080.17 394346.55 394613.02 394879.58 395146.23 395412.97 395679.80 395946.72 396213.73 396480.83 396748.02 397015.30 397282.67 397550.13 397817.68 398085.32 398353.05 398620.87 398888.78 399156.78 399424.87 399693.05 399961.32 400229.68 400498.13 400766.67 401035.30 401304.02 401572.83

56.192 Apple Watch Series 2 Ceramic, 38 mm

[中文]

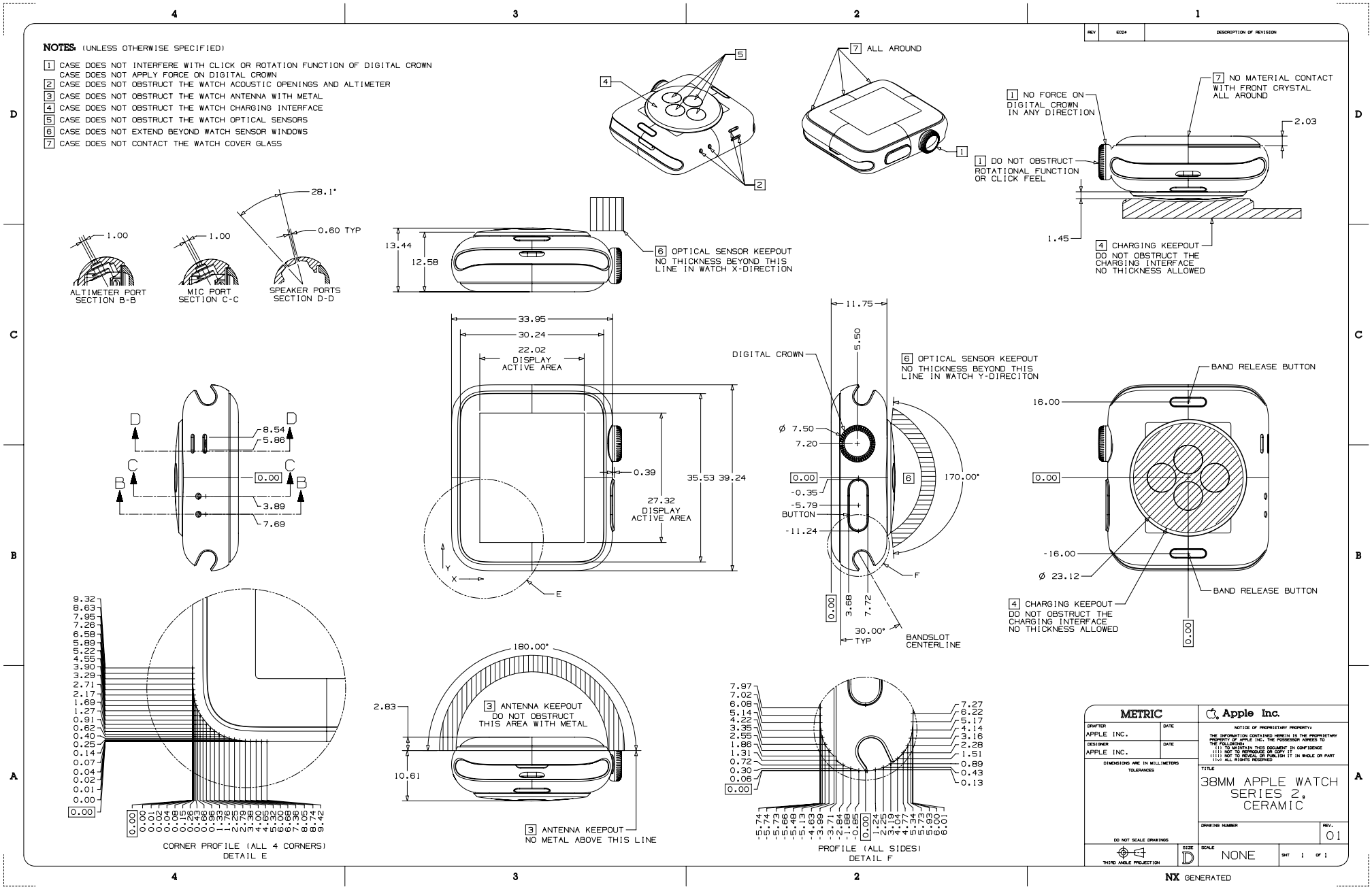

56.193 Apple Watch Series 2 Metal, 42 mm

[中文]

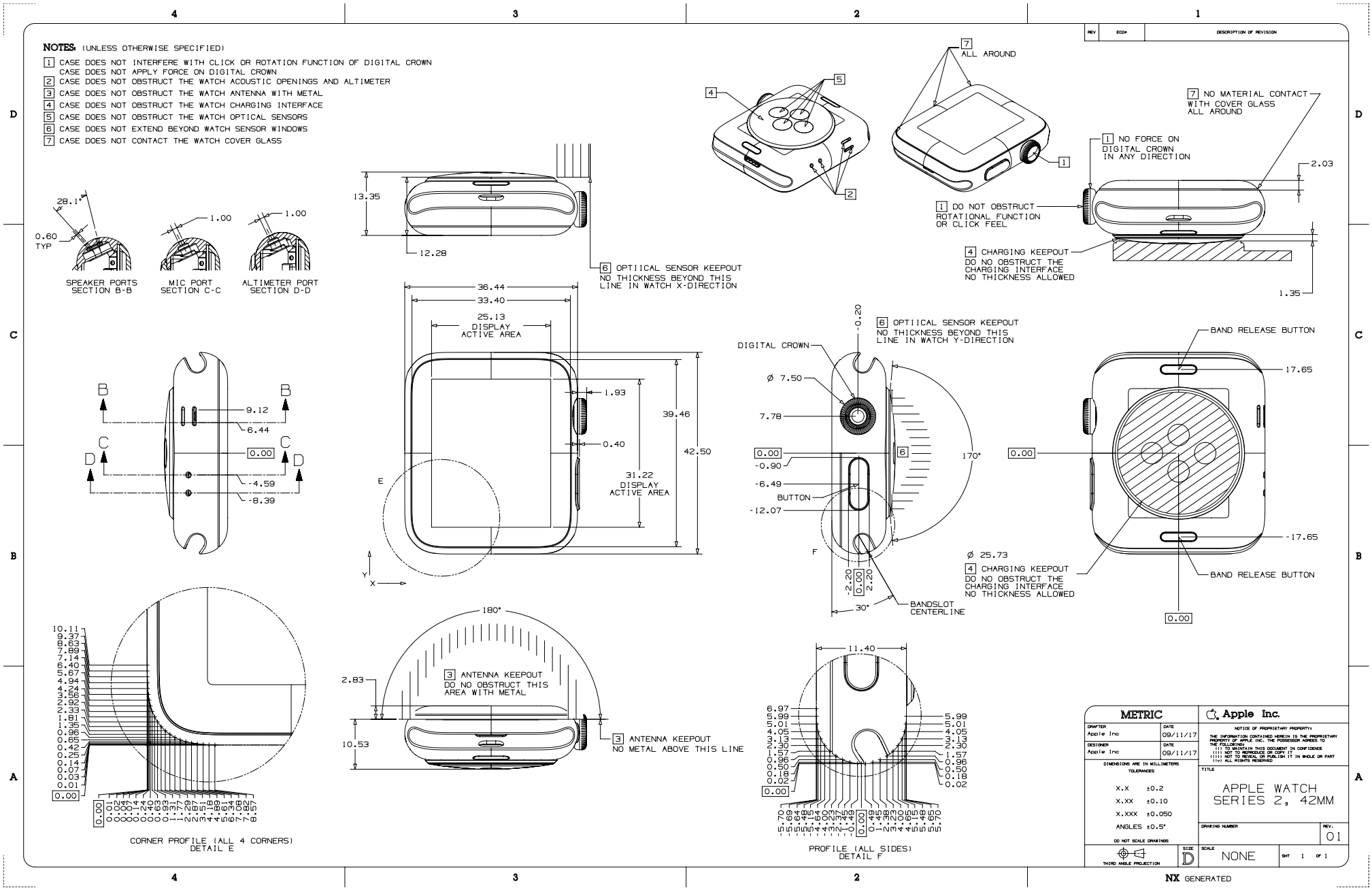

Copyright © 2023 Apple Inc. All Rights Reserved.

56.194 Apple Watch Series 2 Metal, 38 mm

[中文]

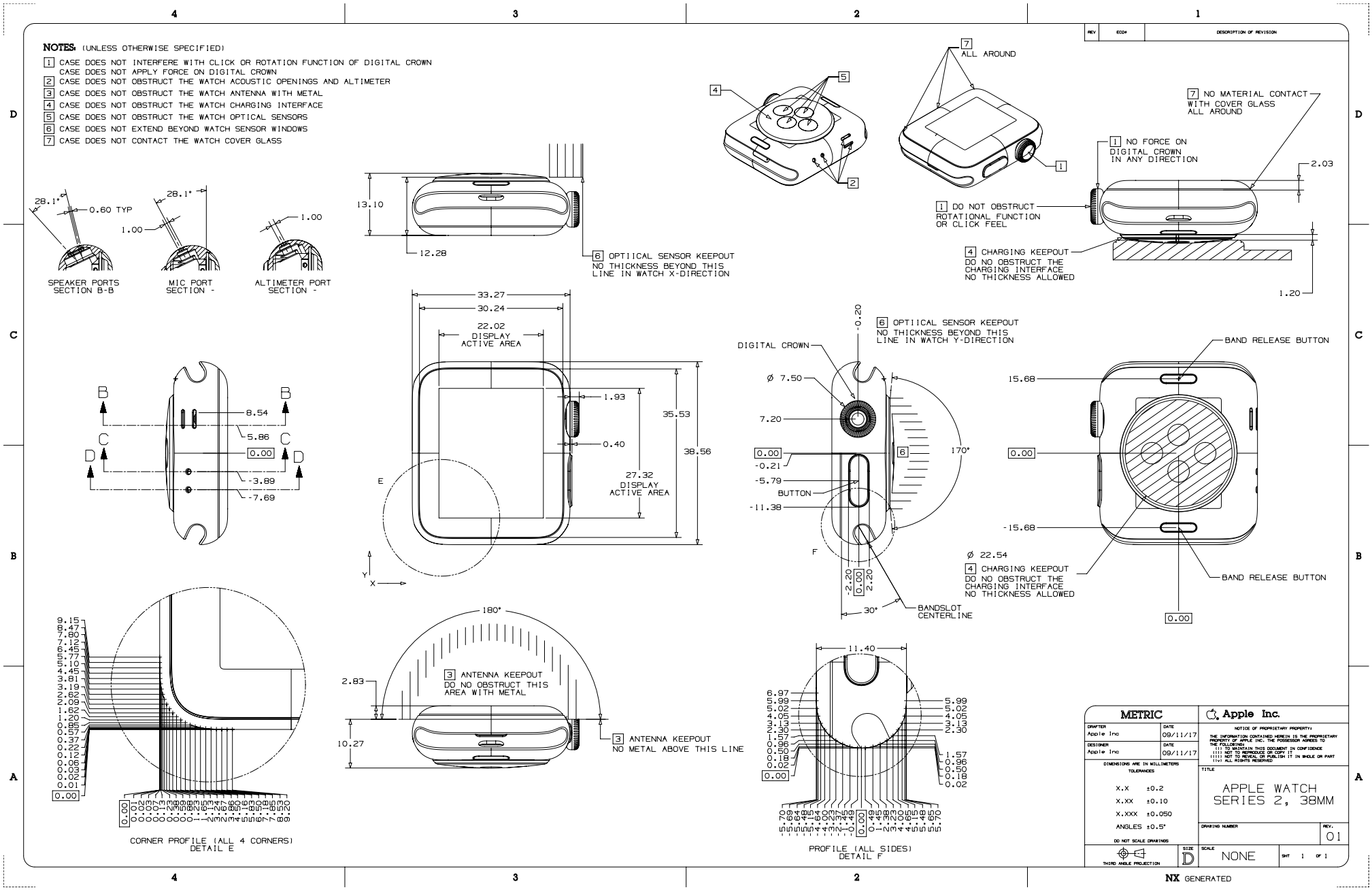

Copyright © 2023 Apple Inc. All Rights Reserved.

56.195 Apple Watch (1st generation) and Apple Watch Series 1, 42 mm

[中文]

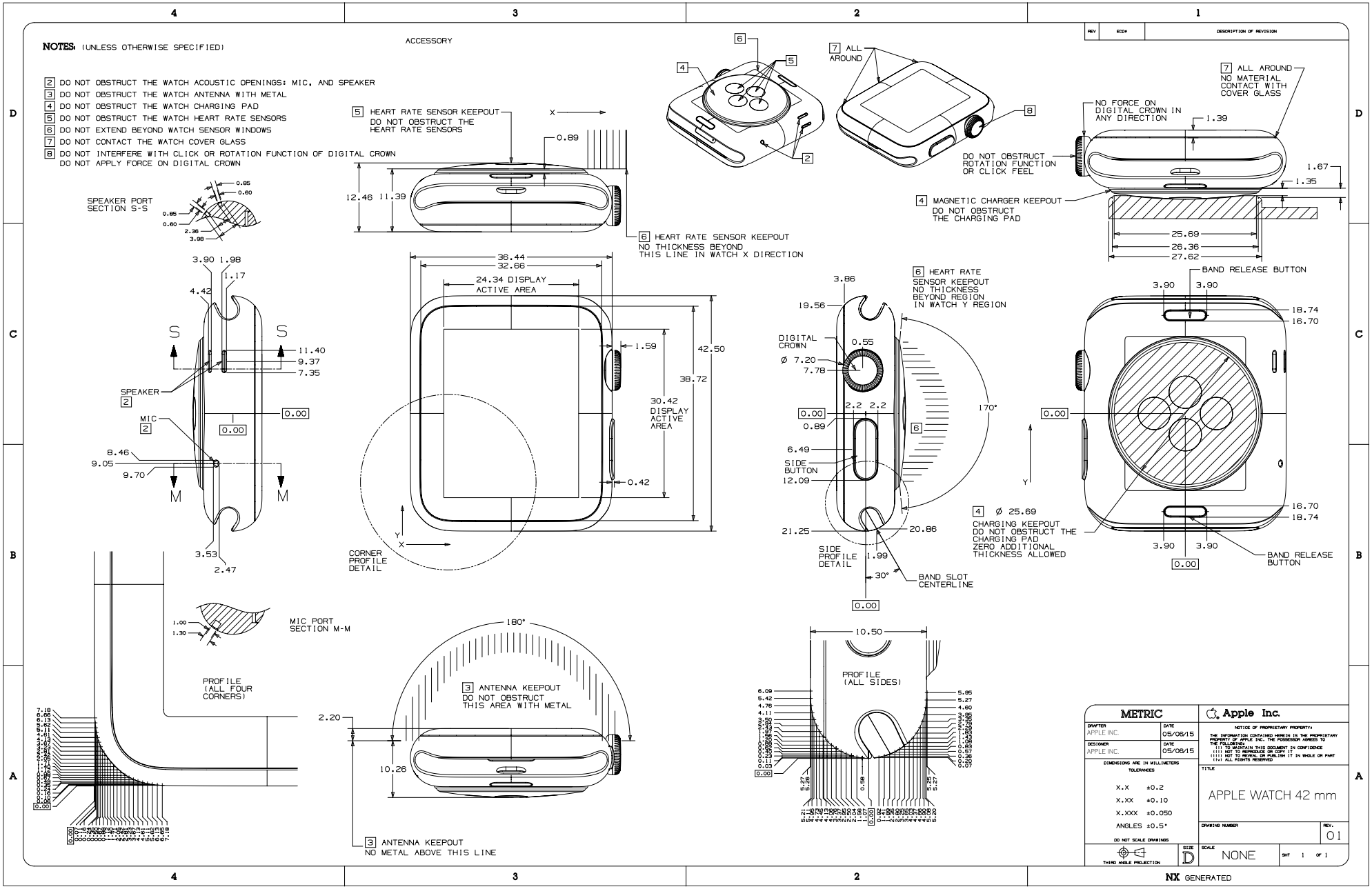

Copyright © 2023 Apple Inc. All Rights Reserved.

56.196 Apple Watch (1st generation) and Apple Watch Series 1, 38 mm

[中文]

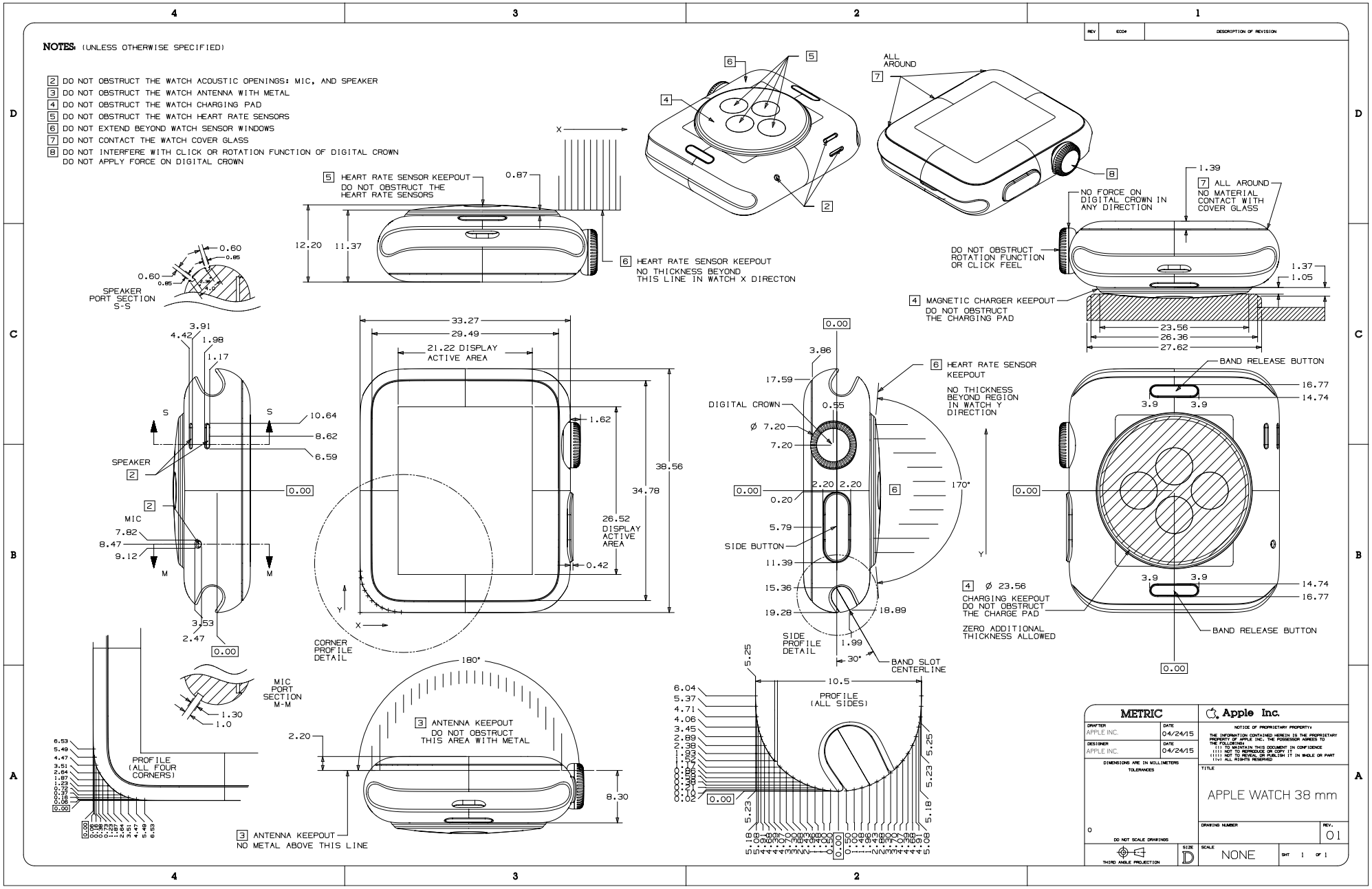

Copyright © 2023 Apple Inc. All Rights Reserved.

56.197 MagSafe Charging Case (USB-C) for AirPods Pro (2nd generation) 1 of 3 [中文]

NOTES: (UNLESS OTHERWISE SPECIFIED)

1. ACCESSORIES INTRUDING INTO SHADED REGIONS WILL NEGATIVELY AFFECT PRODUCT PERFORMANCE.
2. TO ENSURE FULL FUNCTIONALITY, DO NOT OBSTRUCT THIS AREA WITH METAL OR OTHER CONDUCTIVE MATERIAL.
3. TO ENSURE FULL FUNCTIONALITY WITH MINIMAL IMPACT TO QI CHARGING PERFORMANCE, MINIMIZE ANY MATERIAL THICKNESS.
4. TO ENABLE CHARGING VIA APPLE WATCH CHARGER, IT IS RECOMMENDED THERE BE NO MATERIAL BETWEEN BACK OF DEVICE AND WATCH CHARGER.
5. PROTECTIVE CASES OR COVERS MAY DETUNE OR IMPACT RF & WIRELESS CHARGING PERFORMANCE.
   IMPACT IS HIGHLY DEPENDENT ON MATERIAL AND MATERIAL THICKNESS.
   HIGHLY RECOMMEND AVOIDING METAL MATERIAL AND FOLLOWING GUIDELINES IN THIS DOCUMENT TO MINIMIZE IMPACT.

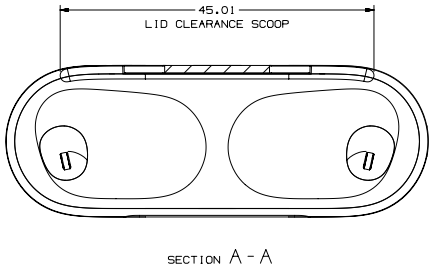

SECTION A - A

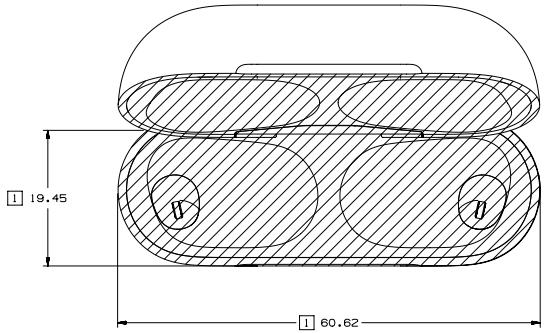

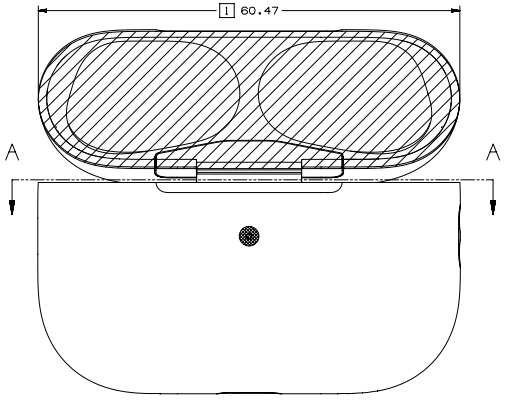

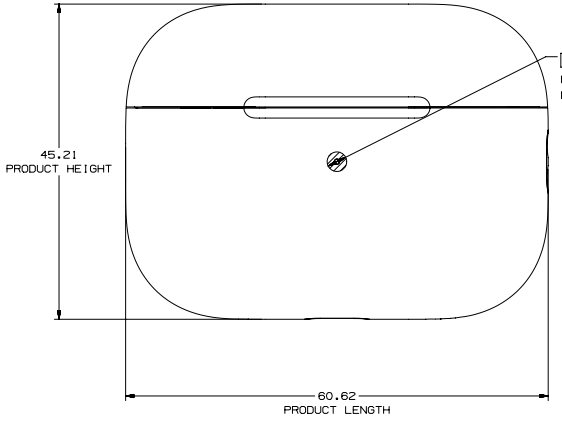

1 LED OUTER DIAMETER = 0.80mm
RECOMMEND Ø2.80
DO NOT OBSTRUCT LED

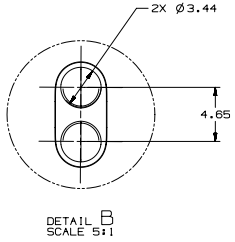

DETAIL B
SCALE 5:1

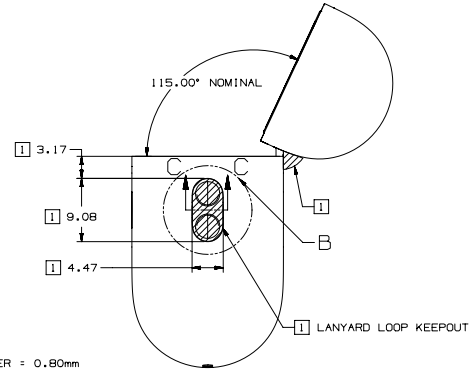

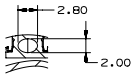

SECTION C - C
INTERNAL DIMENSIONS OF LANYARD LOOP

METRIC	Apple Inc.
DRAWTER / DATE	NOTICE OF PROPRIETARY PROPERTY: THE INFORMATION CONTAINED HEREIN IS THE PROPRIETARY PROPERTY OF APPLE INC. THE POSSESSOR AGREES TO THE FOLLOWING: (i) TO MAINTAIN THIS DOCUMENT IN CONFIDENCE (ii) NOT TO REPRODUCE OR COPY IT (iii) NOT TO REVEAL OR PUBLISH IT IN WHOLE OR PART (iv) ALL RIGHTS RESERVED
DESIGNER / DATE	
DIMENSIONS ARE IN MILLIMETERS TOLERANCES	TITLE: AIRPODS PRO GEN 2 WIRELESS CASE, USB-C
DO NOT SCALE DRAWINGS	DRAWING NUMBER / REV.
THIRD ANGLE PROJECTION / SIZE D / SCALE NONE	SHT 1 OF 3

NX GENERATED

Copyright © 2023 Apple Inc. All Rights Reserved.

56.198 MagSafe Charging Case (USB-C) for AirPods Pro (2nd generation) 2 of 3

[中文]

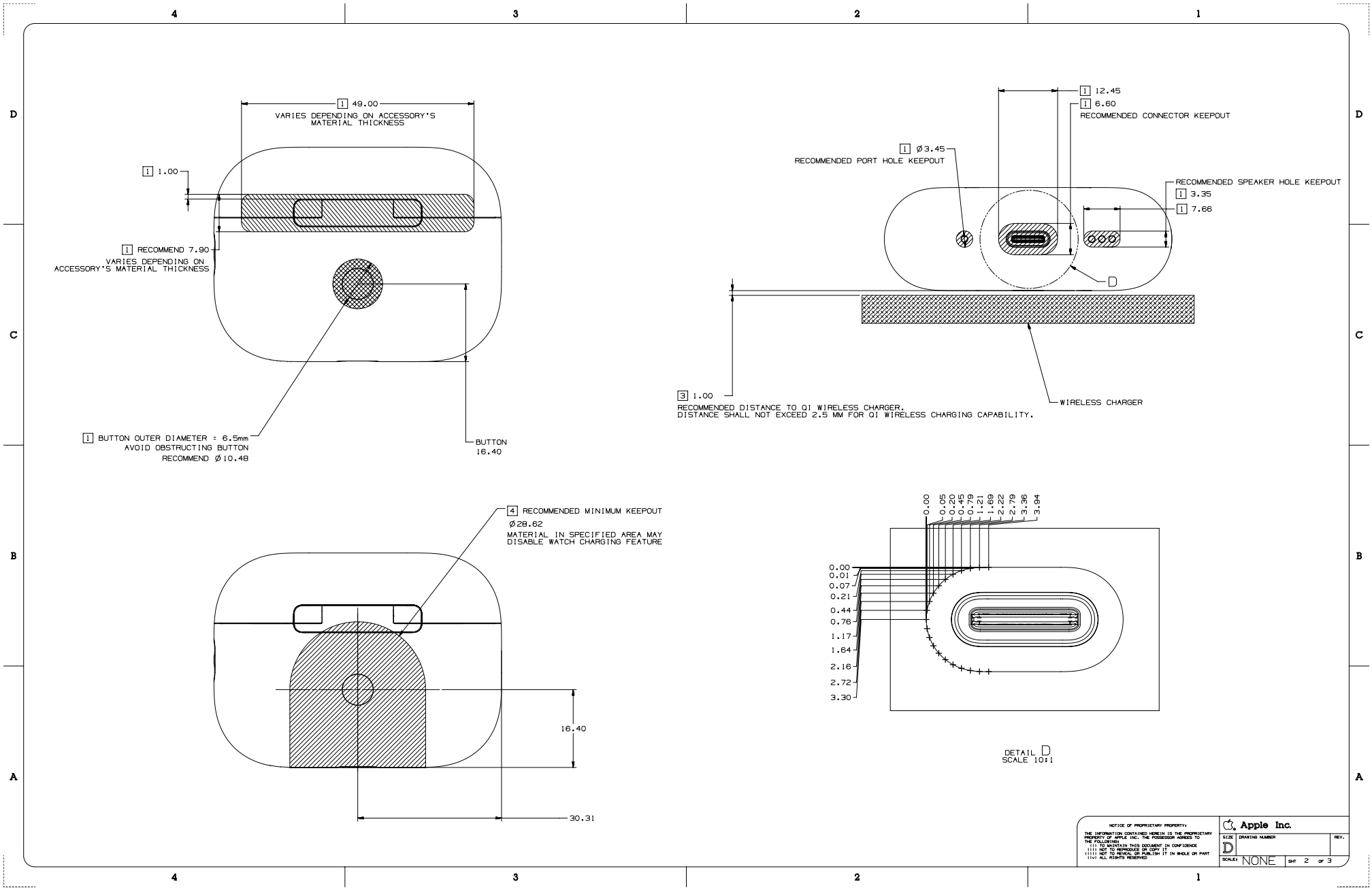

56.199 MagSafe Charging Case (USB-C) for AirPods Pro (2nd generation) 3 of 3

[中文]

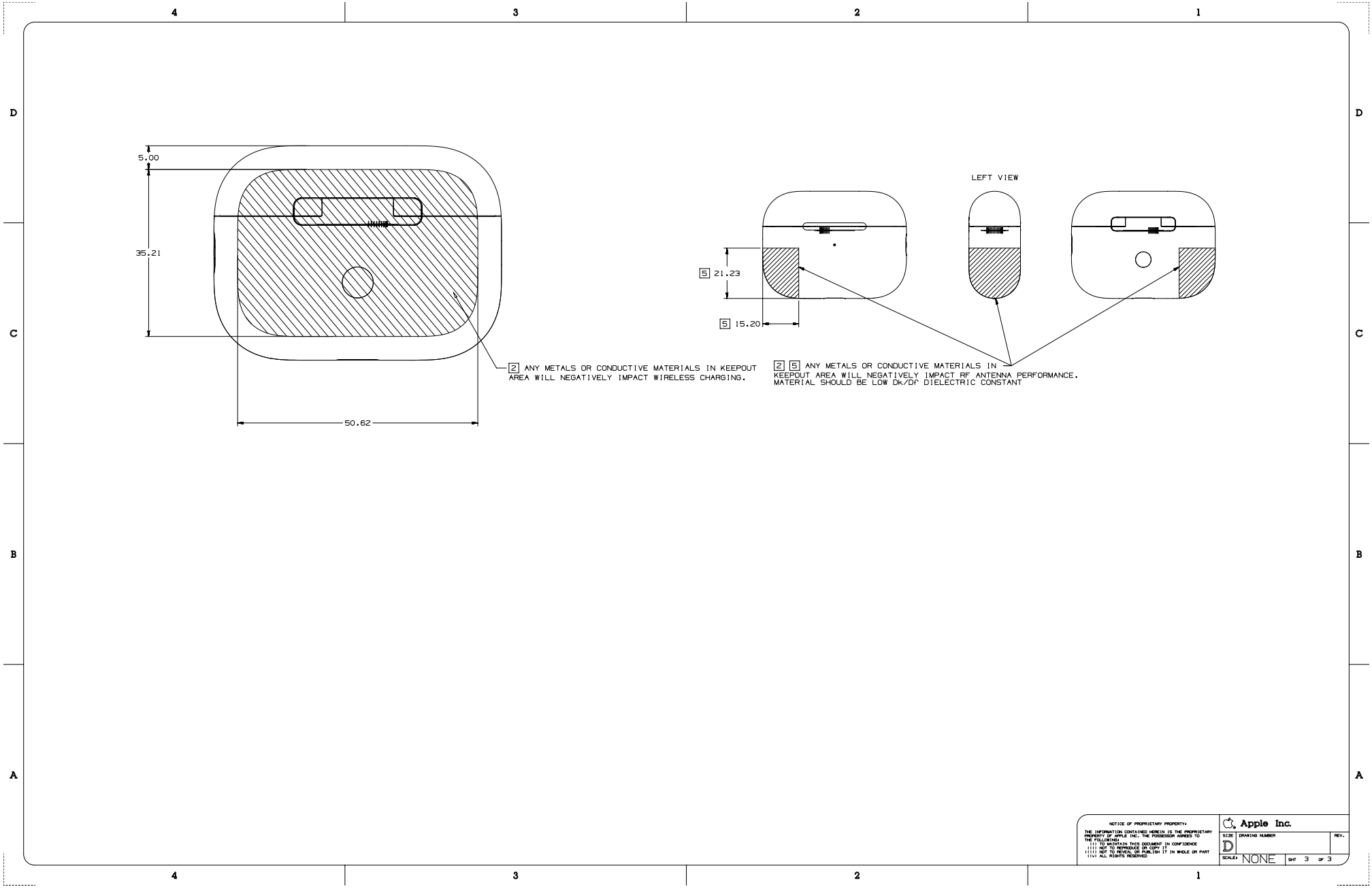

Copyright © 2023 Apple Inc. All Rights Reserved.

56.200 MagSafe Charging Case for AirPods Pro (2nd generation) 1 of 3

[中文]

NOTES: (UNLESS OTHERWISE SPECIFIED)

1. ACCESSORIES INTRUDING INTO SHADED REGIONS WILL NEGATIVELY AFFECT PRODUCT PERFORMANCE.
2. TO ENSURE FULL FUNCTIONALITY, DO NOT OBSTRUCT THIS AREA WITH METAL OR OTHER CONDUCTIVE MATERIAL.
3. TO ENSURE FULL FUNCTIONALITY WITH MINIMAL IMPACT TO QI CHARGING PERFORMANCE, MINIMIZE ANY MATERIAL THICKNESS.
4. TO ENABLE CHARGING VIA APPLE WATCH CHARGER, IT IS RECOMMENDED THERE BE NO MATERIAL BETWEEN BACK OF DEVICE AND WATCH CHARGER.
5. PROTECTIVE CASES OR COVERS MAY DETUNE OR IMPACT RF & WIRELESS CHARGING PERFORMANCE.
   IMPACT IS HIGHLY DEPENDENT ON MATERIAL AND MATERIAL THICKNESS.
   HIGHLY RECOMMEND AVOIDING METAL MATERIAL AND FOLLOWING GUIDELINES IN THIS DOCUMENT TO MINIMIZE IMPACT.

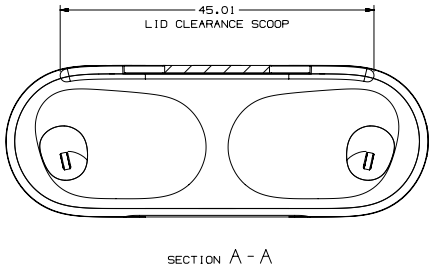

SECTION A - A

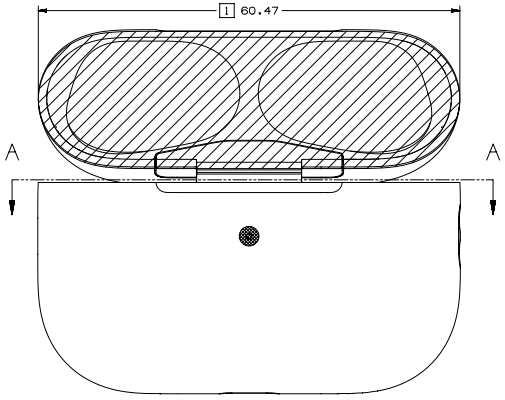

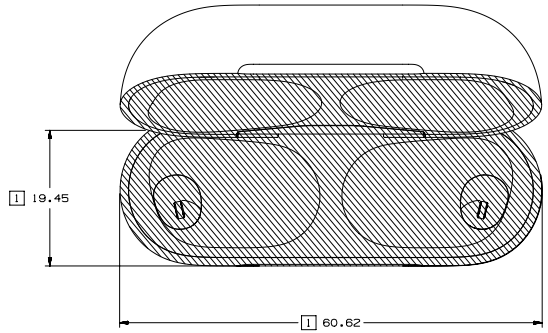

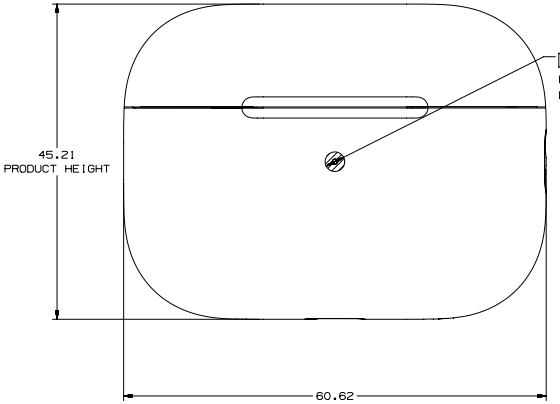

1 LED OUTER DIAMETER = 0.80mm
RECOMMEND Ø2.80
DO NOT OBSTRUCT LED

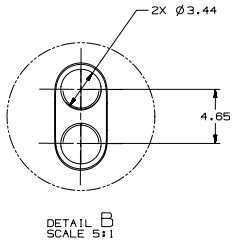

DETAIL B
SCALE 5:1

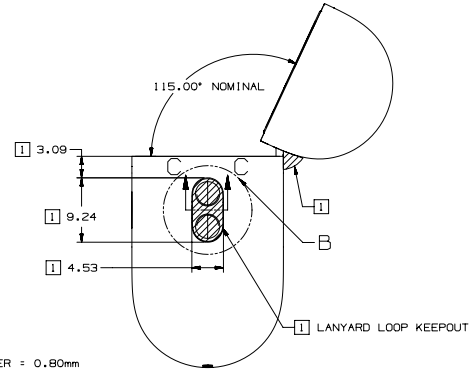

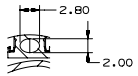

SECTION C - C
INTERNAL DIMENSIONS OF LANYARD LOOP

METRIC	Apple Inc.
DRAWTER / DATE	NOTICE OF PROPRIETARY PROPERTY: THE INFORMATION CONTAINED HEREIN IS THE PROPRIETARY PROPERTY OF APPLE INC. THE POSSESSOR AGREES TO THE FOLLOWING: (i) TO MAINTAIN THIS DOCUMENT IN CONFIDENCE (ii) NOT TO REPRODUCE OR COPY IT (iii) NOT TO REVEAL OR PUBLISH IT IN WHOLE OR PART (iv) ALL RIGHTS RESERVED
DESIGNER / DATE	
DIMENSIONS ARE IN MILLIMETERS TOLERANCES	TITLE: AIRPODS PRO GEN 2 WIRELESS CHARGING CASE
DO NOT SCALE DRAWINGS	DRAWING NUMBER / REV.
THIRD ANGLE PROJECTION / SIZE D	SCALE: NONE / SHT

NX GENERATED

Copyright © 2023 Apple Inc. All Rights Reserved.

56.201 MagSafe Charging Case for AirPods Pro (2nd generation) 2 of 3

[中文]

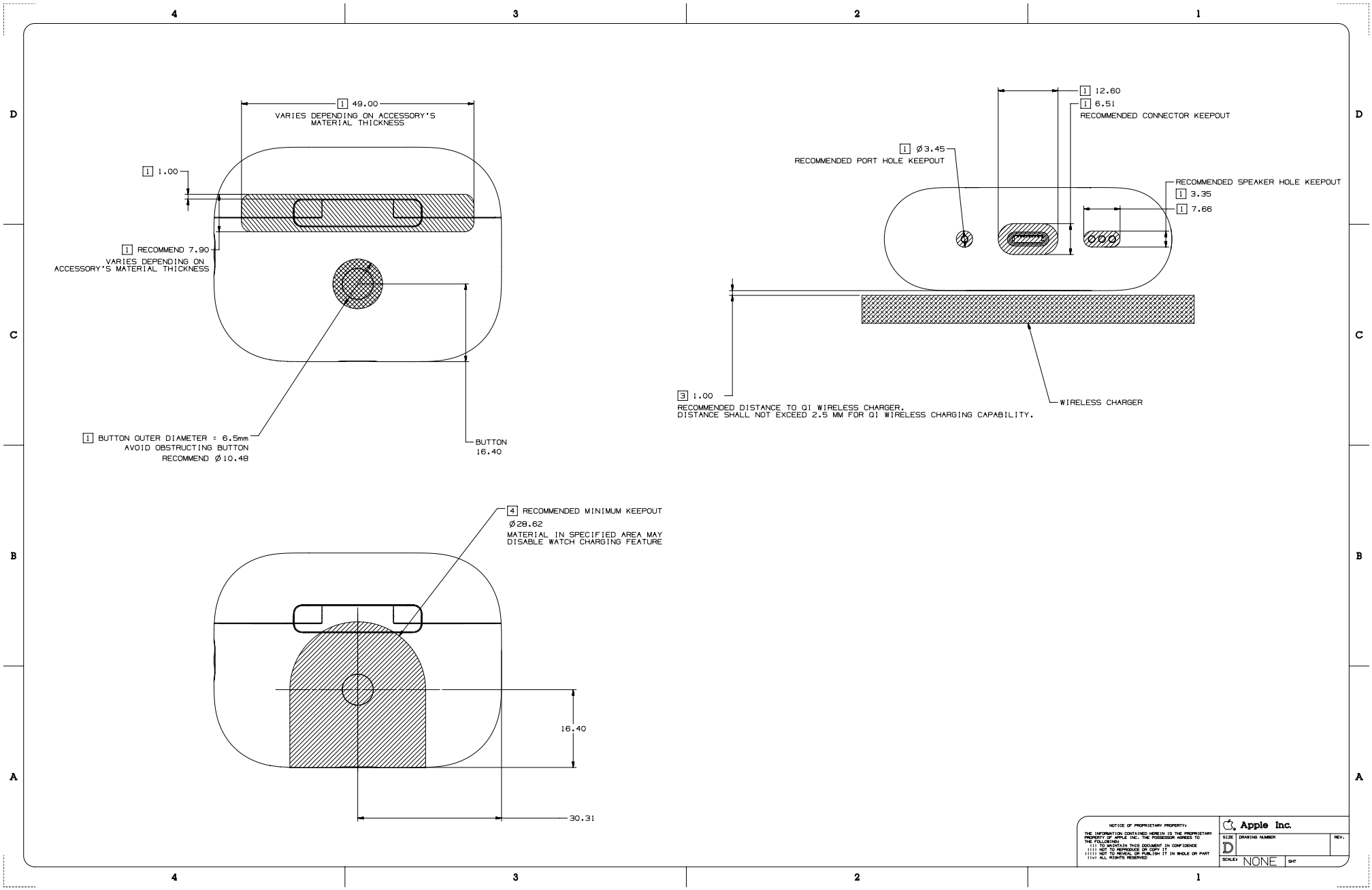

56.202 MagSafe Charging Case for AirPods Pro (2nd generation) 3 of 3

[中文]

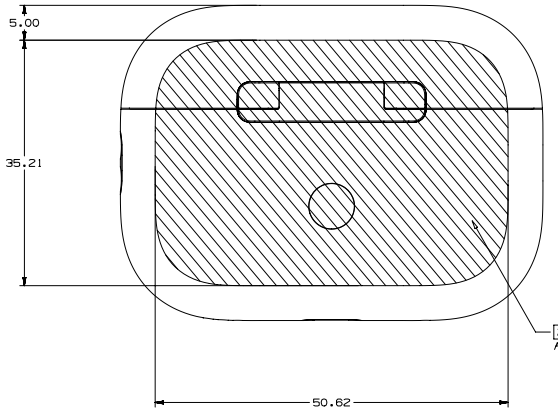

[2] ANY METALS OR CONDUCTIVE MATERIALS IN KEEPOUT AREA WILL NEGATIVELY IMPACT WIRELESS CHARGING.

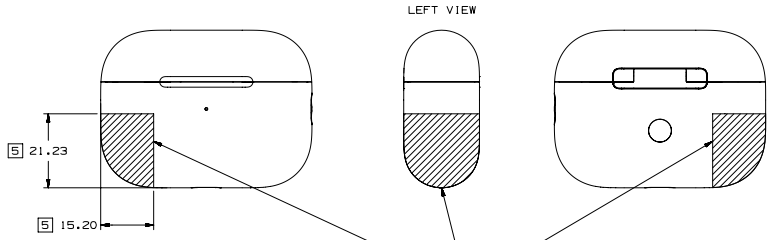

[2] [5] ANY METALS OR CONDUCTIVE MATERIALS IN KEEPOUT AREA WILL NEGATIVELY IMPACT RF ANTENNA PERFORMANCE. MATERIAL SHOULD BE LOW Dk/Df DIELECTRIC CONSTANT

NOTICE OF PROPRIETARY PROPERTY:
THE INFORMATION CONTAINED HEREIN IS THE PROPRIETARY PROPERTY OF APPLE INC. THE POSSESSOR AGREES TO THE FOLLOWING:
(i) TO MAINTAIN THIS DOCUMENT IN CONFIDENCE
(ii) NOT TO REPRODUCE OR COPY IT
(iii) NOT TO REVEAL OR PUBLISH IT IN WHOLE OR PART
(iv) ALL RIGHTS RESERVED

Apple Inc.

SIZE D | DRAWING NUMBER | REV.

SCALE: NONE | SHT

56.203 AirPods Pro (2nd generation)

[中文]

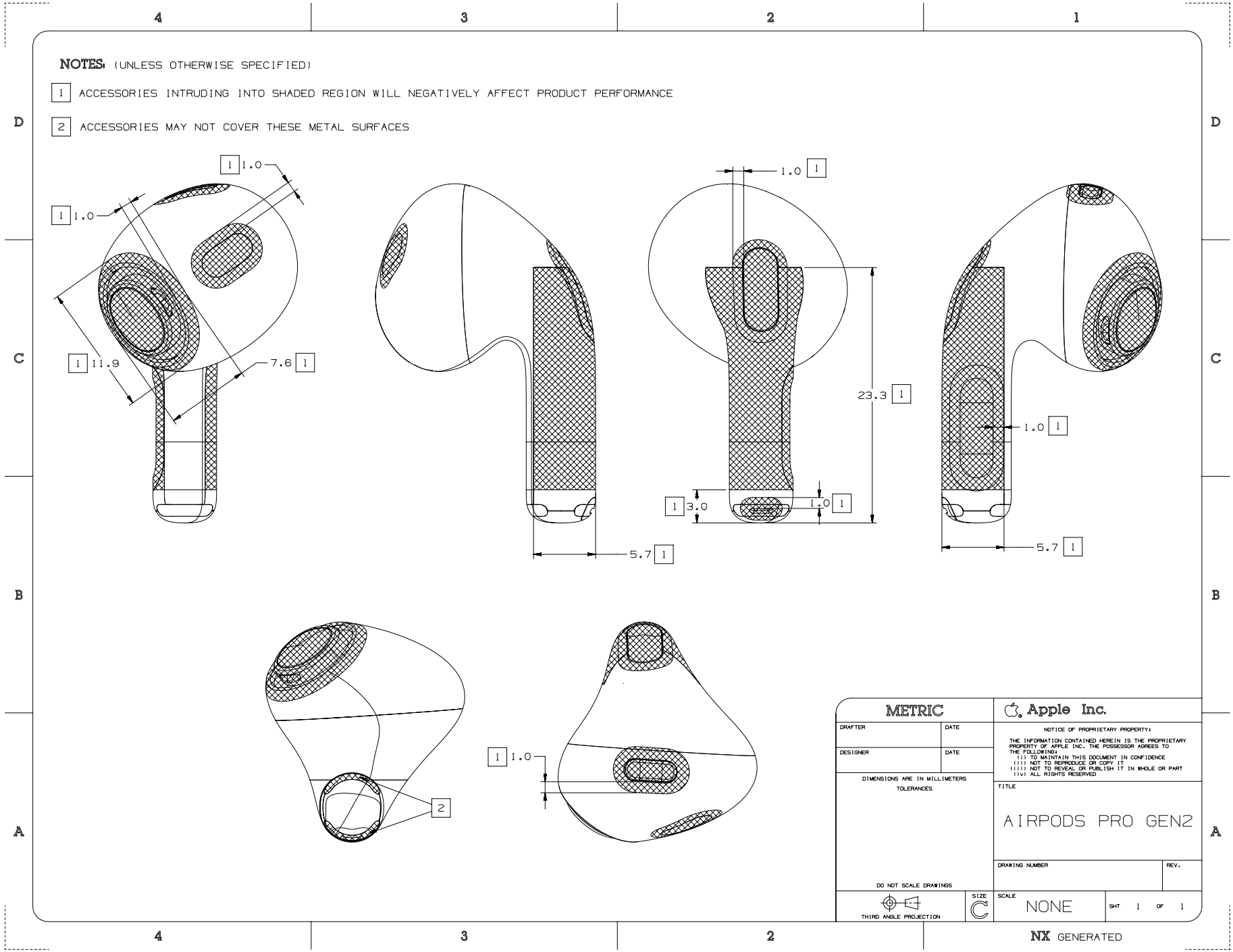

Copyright © 2023 Apple Inc. All Rights Reserved.

56.204 MagSafe Charging Case for AirPods (3rd generation)

[中文]

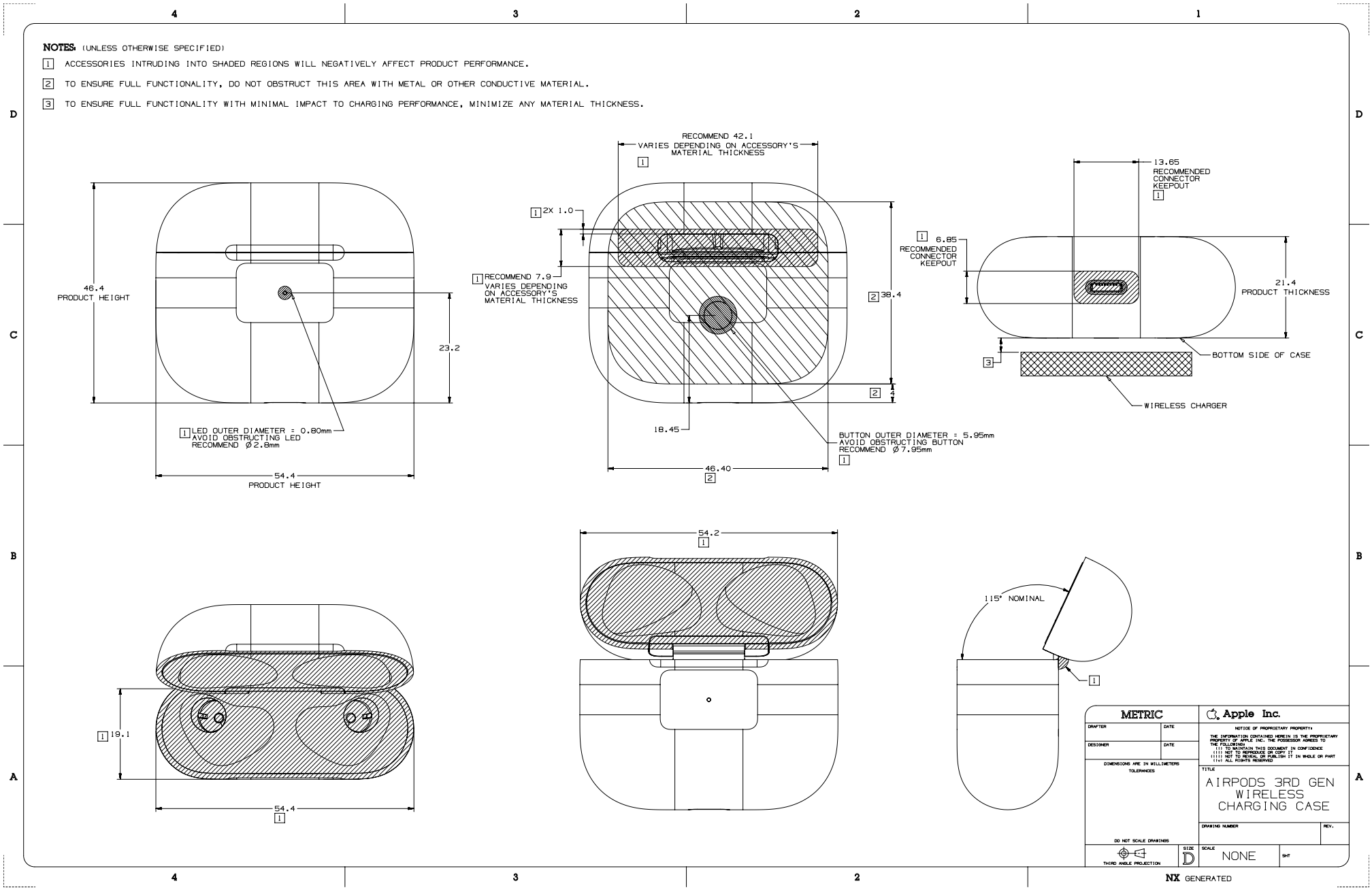

56.205 AirPods (3rd generation)

[中文]

REV	ECO#	DESCRIPTION OF REVISION

NOTES: (UNLESS OTHERWISE SPECIFIED)

1. ACCESSORIES INTRUDING INTO SHADED REGION WILL NEGATIVELY AFFECT PRODUCT PERFORMANCE
2. ACCESSORIES MUST NOT COVER THESE METAL SURFACES

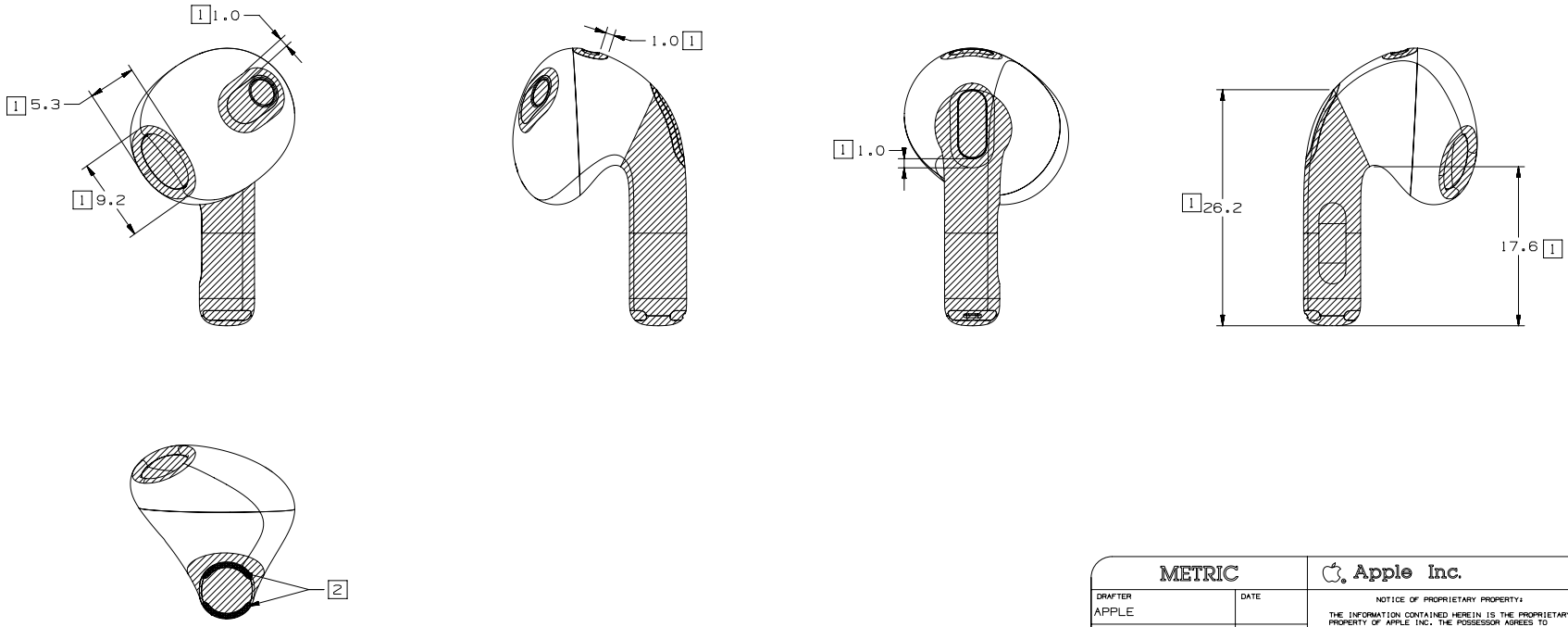

METRIC	Apple Inc.
DRAFTER: APPLE — DATE	NOTICE OF PROPRIETARY PROPERTY: THE INFORMATION CONTAINED HEREIN IS THE PROPRIETARY PROPERTY OF APPLE INC. THE POSSESSOR AGREES TO THE FOLLOWING: (i) TO MAINTAIN THIS DOCUMENT IN CONFIDENCE (ii) NOT TO REPRODUCE OR COPY IT (iii) NOT TO REVEAL OR PUBLISH IT IN WHOLE OR PART (iv) ALL RIGHTS RESERVED
DESIGNER: APPLE — DATE	TITLE: AirPods (3rd generation)
DIMENSIONS ARE IN MILLIMETERS TOLERANCES X.X ±0.2 X.XX ±0.10 X.XXX ±0.050 ANGLES ±0.5° DO NOT SCALE DRAWINGS	DRAWING NUMBER — REV. 01
THIRD ANGLE PROJECTION — SIZE C	SCALE: NONE — SHT 1 OF 1
	NX GENERATED

Copyright © 2023 Apple Inc. All Rights Reserved.

56.206 Wireless Charging Case for AirPods Pro (1st generation)

[中文]

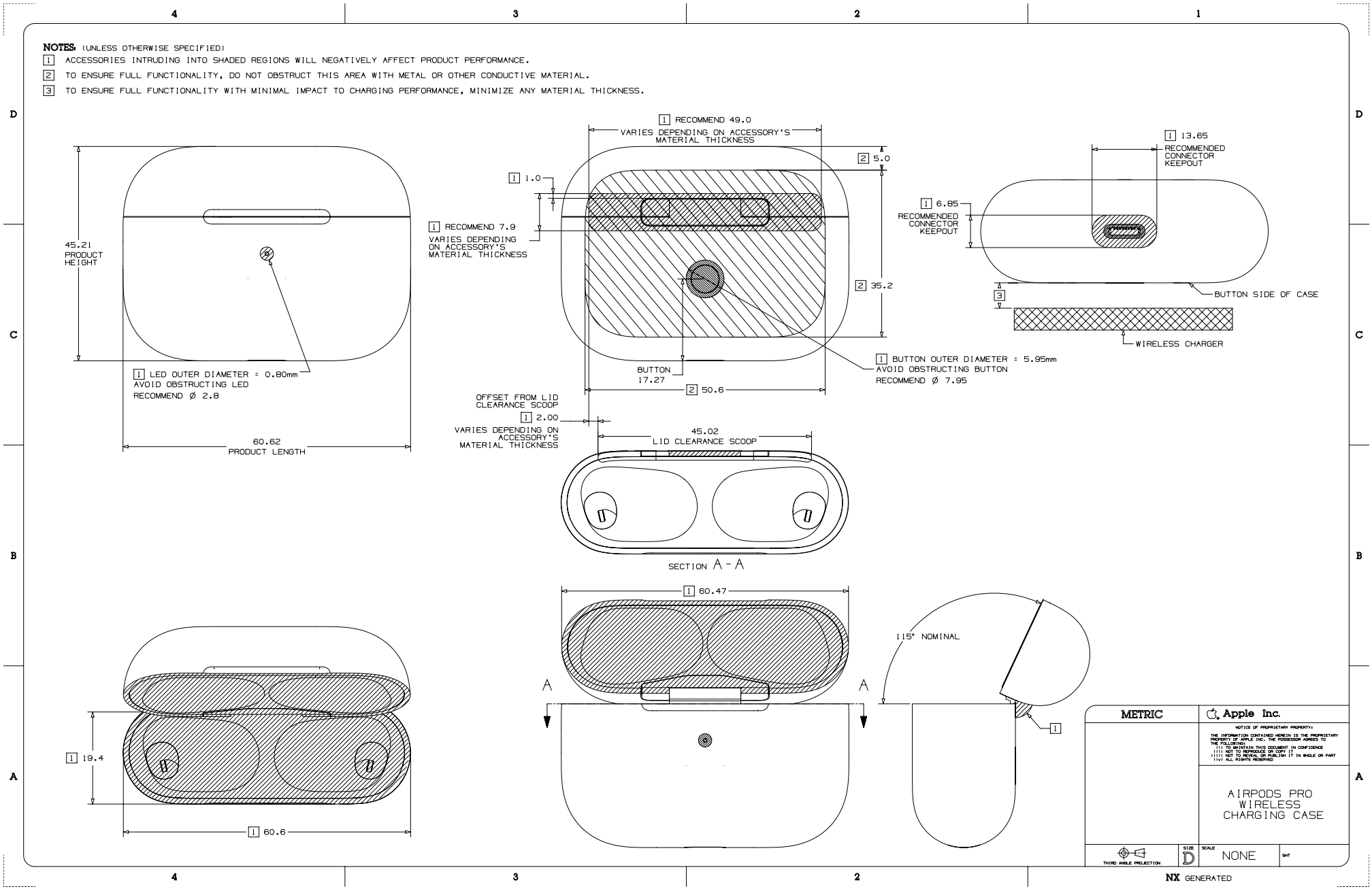

Copyright © 2023 Apple Inc. All Rights Reserved.

56.207 AirPods Pro (1st generation)

[中文]

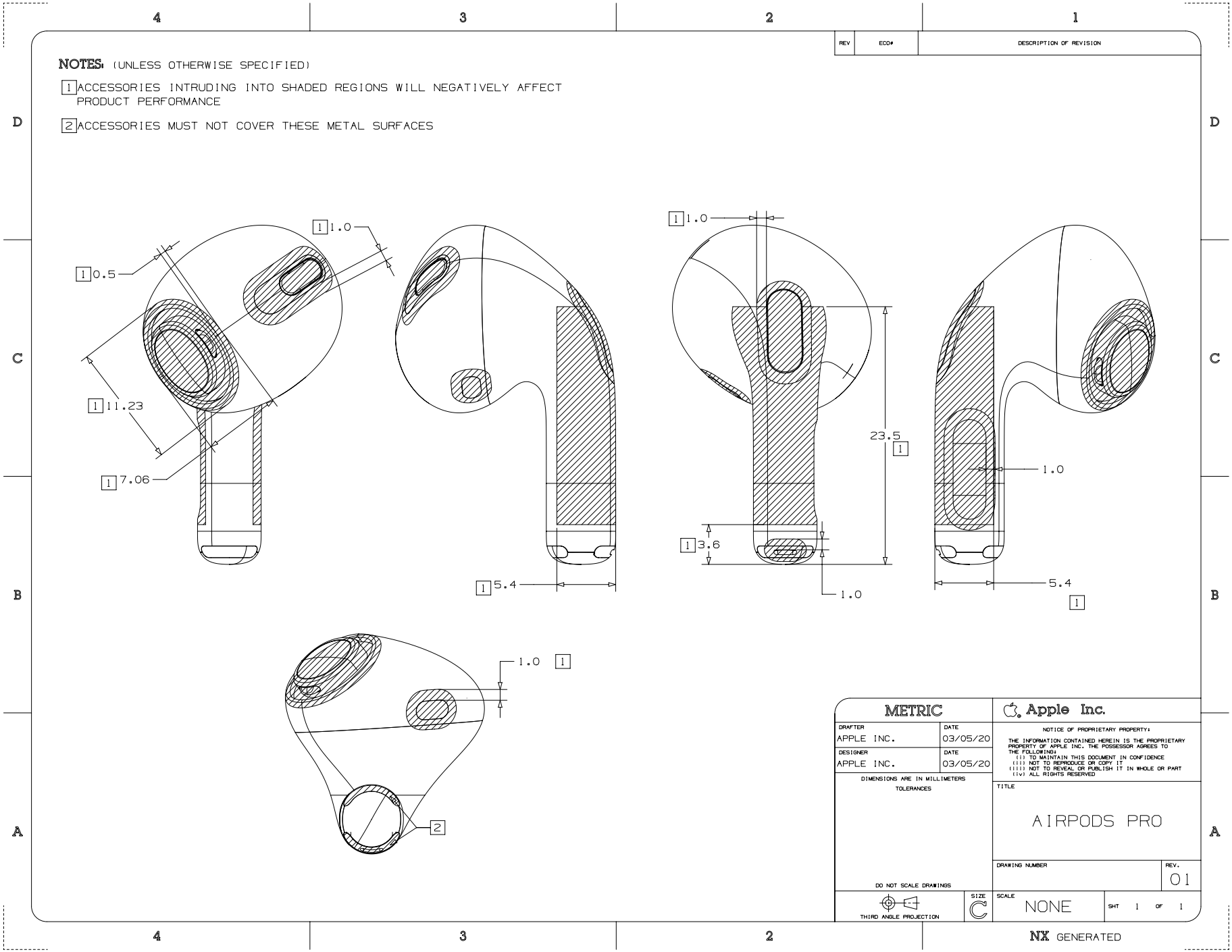

Copyright © 2023 Apple Inc. All Rights Reserved.

56.208 Wireless Charging Case for AirPods

[中文]

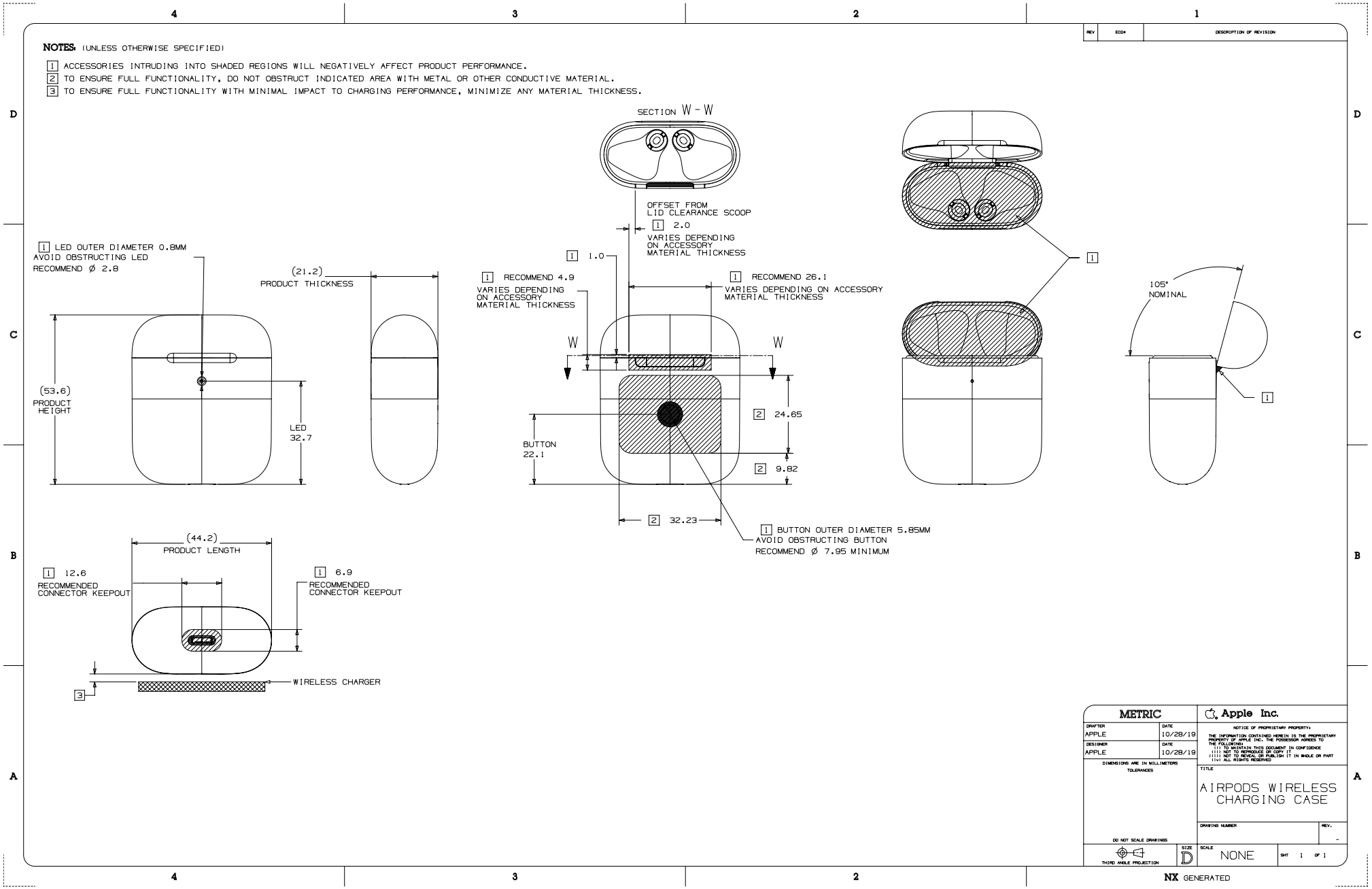

Copyright © 2023 Apple Inc. All Rights Reserved.

56.209 AirPods (1st generation) and AirPods (2nd generation)

[中文]

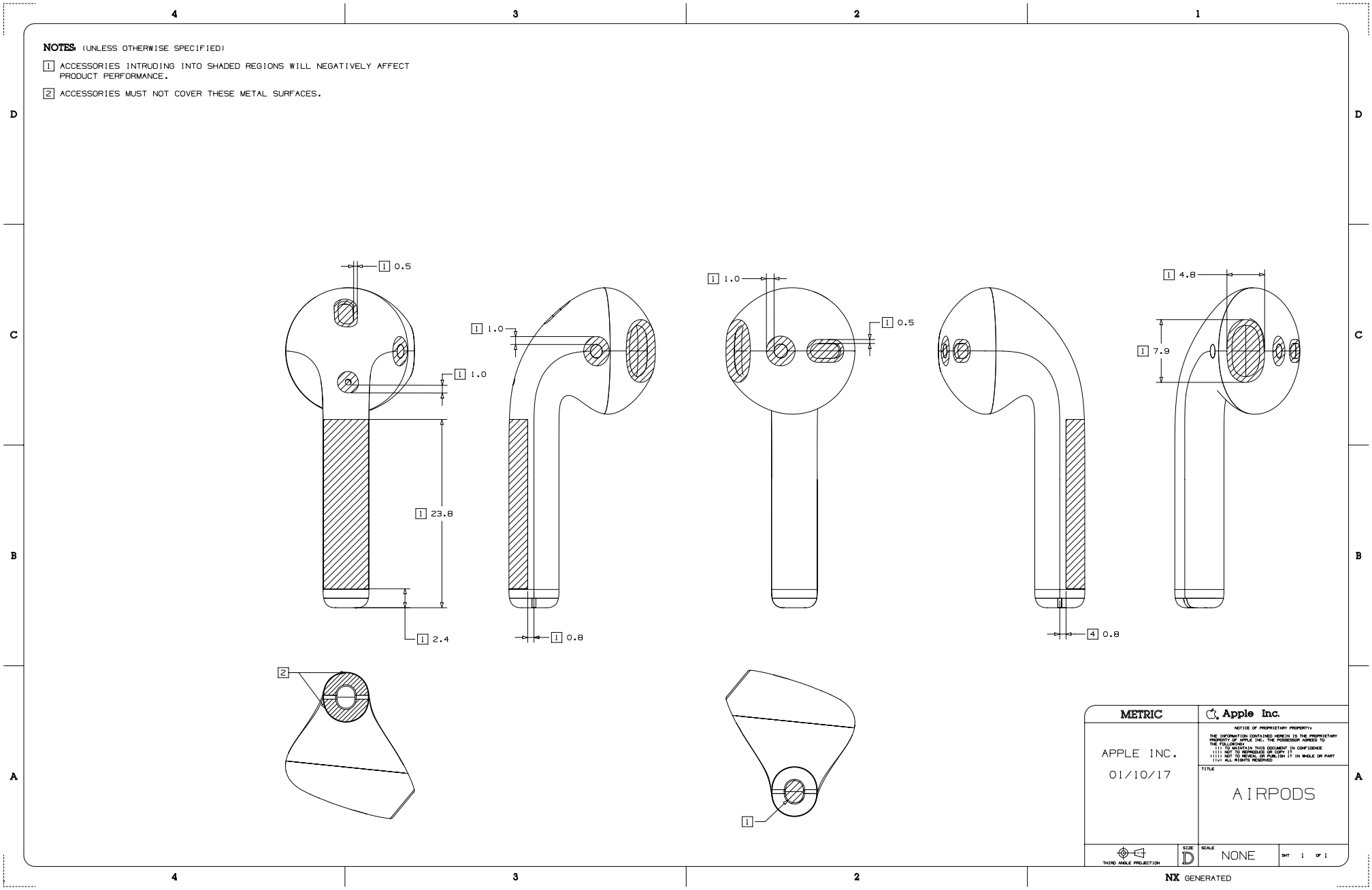

NOTES: (UNLESS OTHERWISE SPECIFIED)

1. CASE SHOULD NOT OBSTRUCT ACOUSTIC AREA
2. ANTENNA KEEPOUT AREA. TO MAXIMIZE ANTENNA PERFORMANCE, NO METAL SHOULD BE CLOSER THAN THIS RADIAL KEEPOUT INCLUDING ABOVE AND BELOW THE DEVICE, MINIMIZE METAL OUTSIDE THE KEEPOUT AS WELL

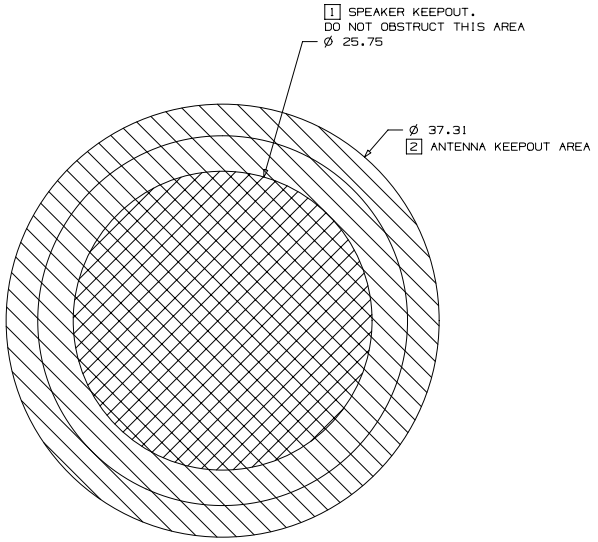

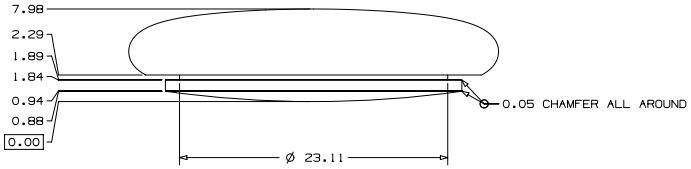

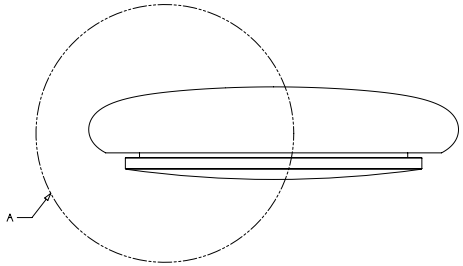

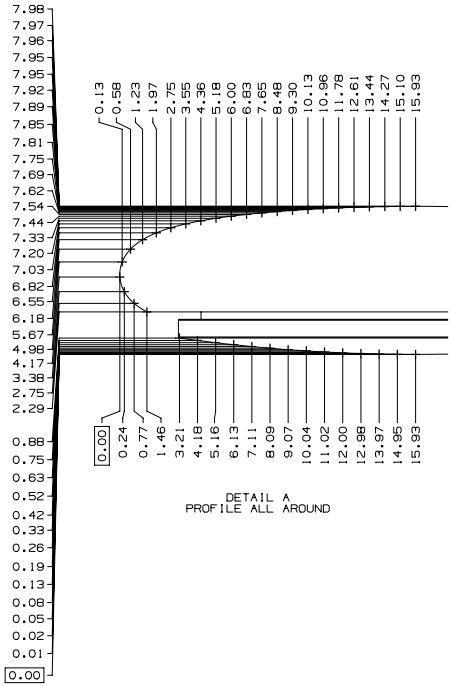

DETAIL A
PROFILE ALL AROUND

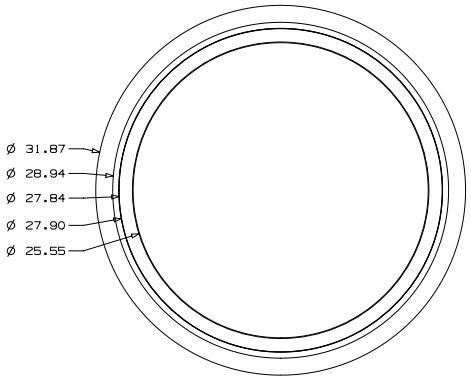

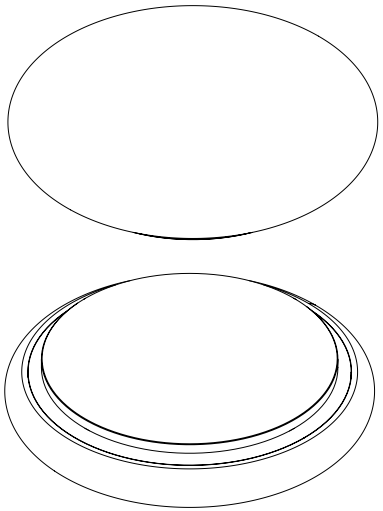

METRIC	Apple Inc.
DRAFTER: APPLE INC. DATE: 04/20/21	NOTICE OF PROPRIETARY PROPERTY: THE INFORMATION CONTAINED HEREIN IS THE PROPRIETARY PROPERTY OF APPLE INC. THE POSSESSOR AGREES TO THE FOLLOWING: (i) TO MAINTAIN THIS DOCUMENT IN CONFIDENCE (ii) NOT TO COPY OR REPRODUCE IT (iii) NOT TO REVEAL OR PUBLISH IT IN WHOLE OR PART (iv) ALL RIGHTS RESERVED
DESIGNER: APPLE INC. DATE: 04/20/21	
DIMENSIONS ARE IN MILLIMETERS TOLERANCES	TITLE: AirTag
DO NOT SCALE DRAWINGS	DRAWING NUMBER / REV.
THIRD ANGLE PROJECTION	SIZE: D SCALE: NONE SHT 1 OF 1

NX GENERATED

56.211 Apple TV 4K (3rd generation)

[中文]

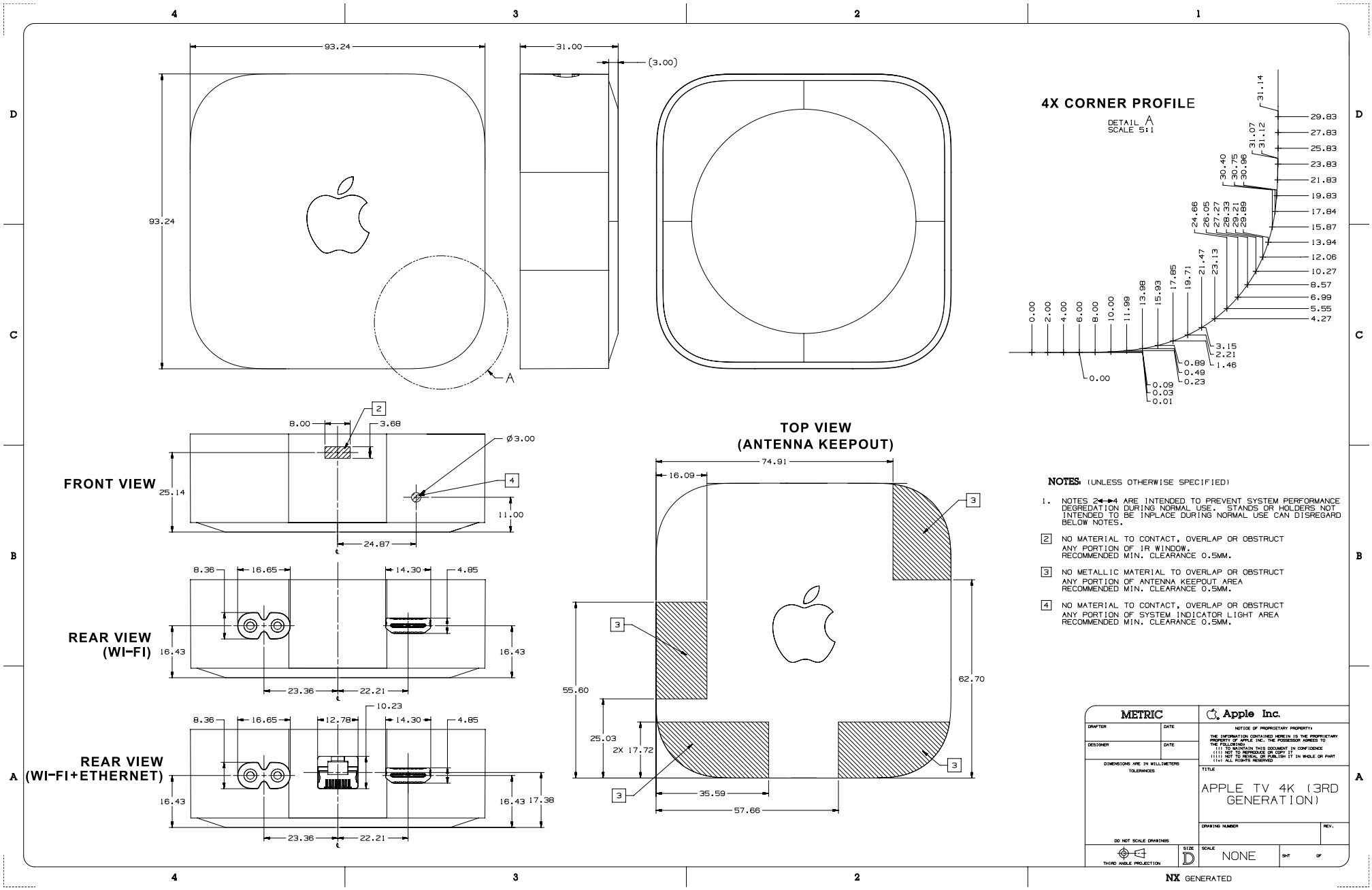

Copyright © 2023 Apple Inc. All Rights Reserved.

56.212 Siri Remote (3rd generation)

[中文]

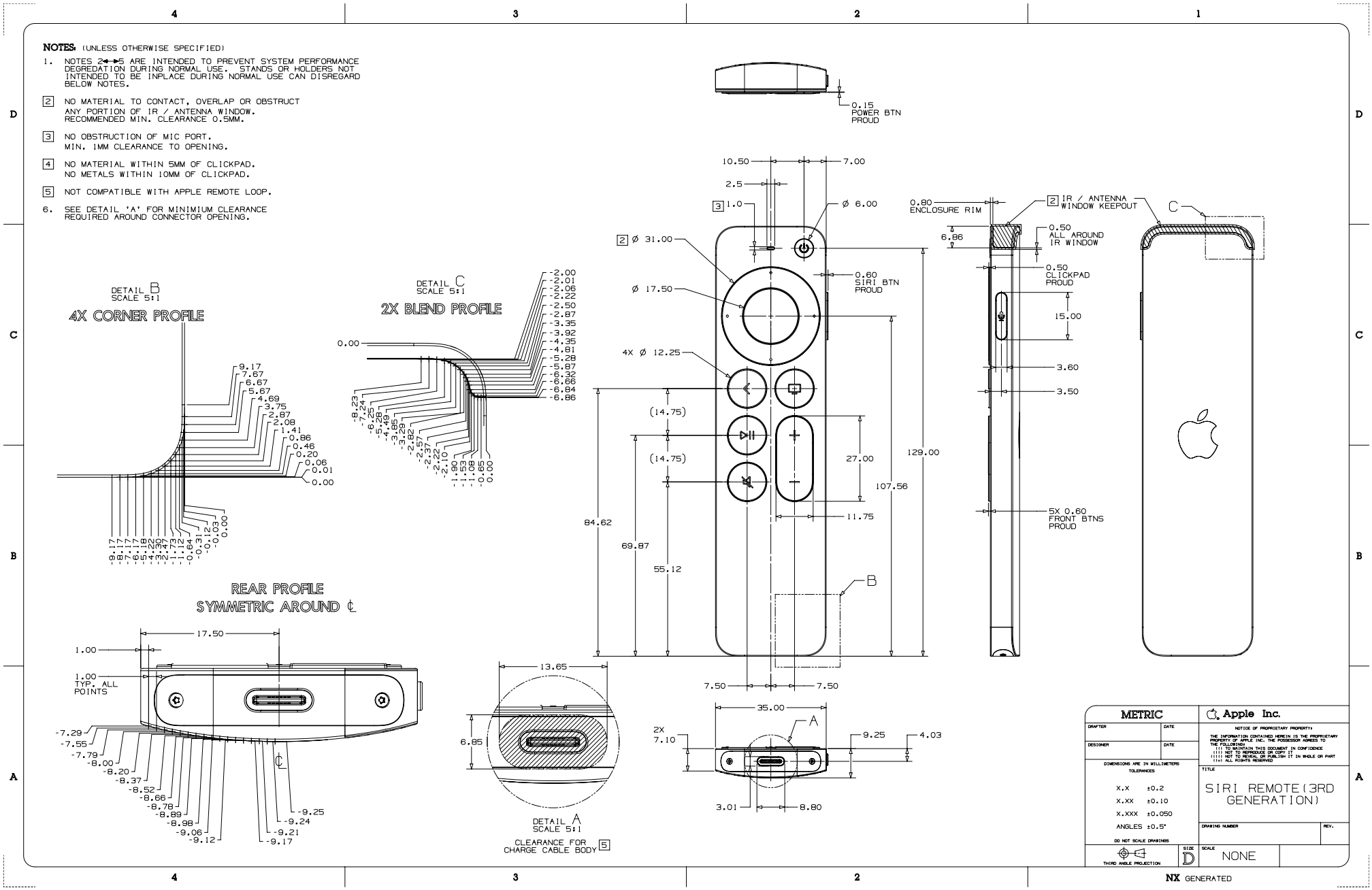

Copyright © 2023 Apple Inc. All Rights Reserved.

Revision History

[中文]

This chapter describes changes to the Accessory Design Guidelines for Apple Devices from the previous revision, excluding stylistic and editorial changes.

Added Content

[中文]

- Access to the USB-C Connector (page 32)
- Cases (page 31) Test Procedures:
  - Autofocus & Optical Image Stabilization (page 61)
  - Compass (page 62)
- Headsets (page 78)
- External Storage (page 97)
- StandBy Mounts (page 107)
- Accessory Power (USB-C) (page 121)
- Device Power (USB-C) (page 131)
- External Accessory Protocol (page 142)
- HID Headset Remote (page 143)
- Musical Instrument Digital Interface (MIDI) (page 170)
- Developer Preview: Apple USB-C Analog Headset Module (page 227)
- Developer Preview: Apple Headset Remote and Microphone Transmitter (page 232)
- Accessory Developer Assistant (ADA) (page 250)
- iPhone 15 Pro Max 1 of 3 (page 259)
- iPhone 15 Pro Max 2 of 3 (page 260)
- iPhone 15 Pro Max 3 of 3 (page 261)
- iPhone 15 Pro 1 of 3 (page 262)
- iPhone 15 Pro 2 of 3 (page 263)
- iPhone 15 Pro 3 of 3 (page 264)
- iPhone 15 Plus 1 of 3 (page 265)
- iPhone 15 Plus 2 of 3 (page 266)
- iPhone 15 Plus 3 of 3 (page 267)
- iPhone 15 1 of 3 (page 268)
- iPhone 15 2 of 3 (page 269)
- iPhone 15 3 of 3 (page 270)
- Apple Watch Ultra 2, 1 of 3 (page 421)

2023-10-10 | Copyright © 2023 Apple Inc. All Rights Reserved.

- Apple Watch Ultra 2, 2 of 3 (page 422)
- Apple Watch Ultra 2, 3 of 3 (page 423)
- Apple Watch Series 9, 45 mm (page 424)
- Apple Watch Series 9, 41 mm (page 425)
- MagSafe Charging Case (USB-C) for AirPods Pro (2nd generation) 1 of 3 (page 455)
- MagSafe Charging Case (USB-C) for AirPods Pro (2nd generation) 2 of 3 (page 456)
- MagSafe Charging Case (USB-C) for AirPods Pro (2nd generation) 3 of 3 (page 457)

Updated Content

[中文]

- All Accessories (page 25)
- Cases (page 31)
- Screen Overlays (page 68)
- Keyboards (page 82)
- Charging Case Covers (page 98)
- Continuity Camera Mounts (page 110)
- Accessory Power (Lightning) (page 125)
- Device Power (Inductive) (page 138)
- USB Power Delivery (page 196)
- iAP2 (page 202)
- Connection Parameters (page 221)
- USB-C Plug (page 240)
- USB-C Receptacle (page 244)

2023-10-10 | Copyright © 2023 Apple Inc. All Rights Reserved.