Accessory Design Guidelines for Apple Devices

Release R18

Contents

1. Overview 15

1. Introduction 16

2. Requirements 17

3. Terminology 18
- 3.1 Device 18
- 3.2 Accessory 18
- 3.3 Component 18
- 3.4 Control Surface 18
- 3.5 Direct User Action 19
- 3.6 Captured Cable 19
- 3.7 Accessory Interface Specification 19
- 3.8 Apple MFi Licensing Program 20

2. Accessories 21

4. All Accessories 22
- 4.1 Scratches and Damage 22
- 4.2 Compliance Testing 22
- 4.3 Integrated USB Receptacles 22
- 4.4 User Supplied Cables and AC Power Adapters 22
- 4.5 Attachments 23
- 4.6 Magnetic Interference 23
- 4.7 Radio Frequency (RF) Performance 24
  - 4.7.1 Materials and Coatings 24
  - 4.7.2 Antenna Keep-Out 25
  - 4.7.3 Over The Air (OTA) Transmission/Reception 25
  - 4.7.4 Specific Absorption Rate (SAR) 25
  - 4.7.5 Near Field Communication (NFC) 25
- 4.8 Thermal Management 26
- 4.9 Tripod Connections 27

2022-07-08 | Copyright © 2022 Apple Inc. All Rights Reserved.

5. Cases 28
5.1 Product Design 28
5.1.1 Device Protection 28
5.1.2 Access to Inputs and Interconnects 29
5.1.3 Dock Compatibility 33
5.1.4 Wireless Power and Rear Pockets 33
5.2 Acoustics 33
5.2.1 Call Quality 33
5.2.2 Speaker to Microphone Coupling 33
5.2.3 Speaker/Microphone Openings 33
5.3 Ambient Light Sensor and Proximity Sensor 36
5.4 Taptic Engine 36
5.5 Magnetic Interference 36
5.6 Home Button / Touch ID Sensor 37
5.7 Camera 37
5.7.1 Geometry 37
5.7.2 Color 38
5.7.3 Surface Finish 38
5.7.4 Image Degradation Examples 38
5.8 Reliability 39
5.8.1 Device Insertion and Removal 39
5.8.2 Colorfastness 39
5.9 Environmental 40
5.10 Test Procedures 40
5.10.1 Device Models 40
5.10.2 Product Design 50
5.10.3 Taptic Engine 53
5.10.4 Home Button / Touch ID Sensor Overlays 53
5.10.5 Acoustics 54

6. Covers 57
6.1 Magnetic Interference 57
6.2 Smart Covers 57

7. Screen Overlays 59
7.1 Product Design 59
7.1.1 Optical Transmission 59
7.1.2 Transmission Haze 60
7.2 Edge Swipe and Edge Press Gestures 60

2022-07-08 | Copyright © 2022 Apple Inc. All Rights Reserved.

8. Camera Attachments 61
8.1 Magnetic Interference 61

9. Adapters 62
9.1 Headset Adapters (Lightning to 3.5 mm) 62
9.2 USB-A/USB-C to Lightning Headset Adapters 62
9.3 Ethernet Adapters (Lightning to RJ45) 62
9.4 Lightning to USB Micro-B Adapters 63

10. AC Power Adapters 64
10.1 Converter Switching Frequencies 64
10.2 YCAP AC Capacitor 64
10.3 Impedance Stability 64
10.4 Fuse Protection 65
10.5 Short Circuit Response 66

11. Battery Packs 67

12. Strobes 68

13. Keyboards 70
13.1 Requirements 70
13.2 Examples 74
13.2.1 Example HID Report Descriptor 74

14. Trackpads 76
14.1 Requirements 76
14.1.1 Integration with Keyboards 76
14.1.2 HID Report Descriptor 77
14.1.3 Coexistence 77
14.1.4 Performance 78
14.1.5 Input Confidence 78
14.1.6 Click to Wake 78
14.2 Examples 79
14.2.1 Example HID Report Descriptor 79
14.2.2 Example Trackpad 82

15. AirPods Accessories 85
15.1 Charging Case Covers 85
15.2 Chargers 85

2022-07-08 | Copyright © 2022 Apple Inc. All Rights Reserved.

16. Watch Bands 86
16.1 Requirements 86
16.2 Apple Watch Band Interface 88
16.3 Example Apple Watch Lug Assembly 89
16.4 Example Apple Watch Lug 91

17. Continuity Camera Mounts 92
17.1 Product Design 93
17.2 MacBook Mount 94
17.3 iMac or Display Mount 95
17.4 Test Procedures 96
17.4.1 Equipment 96
17.4.2 Enable Continuity Camera 96
17.4.3 Product Design 96
17.4.4 Center Stage 97
17.4.5 Desk View 97

3. Features 99

18. Bluetooth Accessory Identification 100
18.1 HFP Command AT+XAPL 100

19. Accessory Power (Lightning) 102

20. App Discovery 103

21. App Launch 104

22. App Match 105

23. Bluetooth Headset Battery Level Indication 107
23.1 HFP Command AT+IPHONEACCEV 107

24. Device Power (Lightning) 108
24.1 Direct Power Source 108
24.2 External Power Source 108
24.3 Declaring Capability 109
24.4 Providing Power using USB Connectors 109
24.5 Labeling Multiple Connectors 110

2022-07-08 | Copyright © 2022 Apple Inc. All Rights Reserved.

24.6 Fast Charge for iPhone (20 W) 110
24.7 Overcurrent and Short Circuit Protection 111
24.8 Overcurrent and Short Circuit Protection Resets 112
24.9 Power State Changes 112

25. Device Power (Inductive) 113
25.1 Qi Wireless Power 113
25.2 Electromagnetic Compatibility (EMC) 113

26. Location Information 116

27. MagSafe Attach 117
27.1 MagSafe Case Magnet Array 118
27.1.1 Product Design 118
27.1.2 Mechanical 118
27.1.3 Magnetic Interference 124
27.2 MagSafe Accessory Magnet Array 125
27.2.1 Product Design 125
27.2.2 Mechanical 125
27.3 MagSafe Accessory Enclosure Geometry 132
27.4 Test Procedures 133
27.4.1 MagSafe Case Magnet Array 133

28. Media Library Access 137

29. Now Playing Updates 138

30. Out-of-Band Bluetooth Pairing 139

31. Siri 140
31.1 Enabling Custom Siri Commands 140
31.2 Obtaining Siri Availability Information 140
31.2.1 Obtaining Status Information at Connection 140
31.2.2 Receiving Siri Availability Updates from the Device 141
31.3 Initiating a Siri Session 142
31.3.1 Initiating a Session from the Accessory 142
31.3.2 Initiating a Session from the Device 143
31.3.3 Ending a Session from the Accessory 144
31.4 Siri Eyes Free Mode 144
31.4.1 HFP Command AT+APLEFM 145

2022-07-08 | Copyright © 2022 Apple Inc. All Rights Reserved.

31.5 Improving Voice Recognition 145
31.5.1 Wide Band Speech Support 146
31.6 Optimizing the Siri Experience 146
31.7 Common Siri Applications 147
31.7.1 Initialization Procedure After Connection is Established 147
31.7.2 Phone Dialing Using Siri 148
31.7.3 Audio Routing and Media Playback Using Siri 148
31.7.4 Turn-By-Turn Directions Using Siri 149
31.8 User Interaction with Siri Eyes Free in a Vehicle 149
31.9 Enabling/Disabling Siri from the Device 151
31.10 Test Procedures 152
31.10.1 Siri Eyes Free 152

32. Wi-Fi Information Sharing 157

4. Protocols 158

33. USB Power Capability Vendor Request 159

34. USB D+/D- Resistor Networks 160
34.1 Declaring Power Source Capability 160
34.2 Identifying Power Source Current Limit 161

35. USB Power Delivery 163

36. USB-C Current 164

37. Advanced Audio Distribution Profile (A2DP) 165
37.1 Bluetooth A2DP Specification 165
37.1.1 AVDTP Transactions 165
37.2 SubBand Codec (SBC) 165
37.3 MPEG 2/4 AAC Codecs 166
37.4 Test Procedures 167
37.4.1 Audio Quality 167
37.4.2 Audio Switching 167
37.4.3 HFP Interaction 167
37.4.4 Siri 167
37.4.5 Video Playback 168

2022-07-08 | Copyright © 2022 Apple Inc. All Rights Reserved.

38. iAP2 169

39. Human Interface Device (HID) 170
39.1 Requirements 170
39.1.1 Report Descriptor 171
39.1.2 USB 171
39.2 Test Procedures 171
39.2.1 General 171

5. Transports 173

40. Bluetooth 174
40.1 Enhanced Data Rate 174
40.2 Adaptive Frequency Hopping 174
40.3 Sniff Mode for Low Power Consumption 174
40.4 Role and Topology Management 175
40.5 Extended Inquiry Response 176
40.6 Secure Simple Pairing 176
40.7 Pairing Button 177
40.8 Class of Device (CoD) 177
40.9 Link Supervision Timeout 177
40.10 Delay Reporting 177
40.11 Profiles 177
40.11.1 Device ID Profile (DID) 178
40.11.2 Service Discovery Protocol (SDP) 178
40.11.3 Hands-Free Profile (HFP) 178
40.11.4 Message Access Profile (MAP) 181
40.11.5 Audio/Video Remote Control Profile (AVRCP) 181
40.11.6 Advanced Audio Distribution Profile (A2DP) 183
40.12 Audio Routing 183
40.12.1 Audio Data Received using HFP Profile 183
40.12.2 Audio Data Received using A2DP Profile 184
40.13 HID 185

41. Bluetooth Low Energy (BLE) 186
41.1 Role 186
41.2 Advertising Channels 186
41.3 Advertising PDU 186
41.4 Advertising Data 186

2022-07-08 | Copyright © 2022 Apple Inc. All Rights Reserved.

41.5 Advertising Interval 187
41.6 Connection Parameters 188
41.7 Data Packet Length Extension 188
41.8 Privacy 189
41.9 Permissions 189
41.10 Pairing 189
41.11 MTU Size 190
41.12 Services 190
41.12.1 Generic Access Profile Service 190
41.12.2 Generic Attribute Profile Service 190
41.12.3 Device Information Service 191
41.12.4 Available Services 191
41.13 GATT Server 191

6. Connectors 193

42. USB-A Receptacle 194
42.1 Mechanical 194
42.2 Electrical 194

43. USB-C Plug 195
43.1 Mechanical 195
43.2 Electrical 195
43.3 Test Procedures 196
43.3.1 Connector Test ID 196
43.3.2 Drawing Power 196

44. USB-C Receptacle 197
44.1 Mechanical 197
44.2 Electrical 197
44.2.1 Drawing Power 197
44.2.2 Providing Power 198
44.3 Test Procedures 198
44.3.1 Connector Test ID 198
44.3.2 Drawing Power 198
44.3.3 Providing Power 199

7. References 200

2022-07-08 | Copyright © 2022 Apple Inc. All Rights Reserved.

45. Device Dimensional Drawings 201
45.1 iPhone 13 Pro Max 1 of 2 205
45.2 iPhone 13 Pro Max 2 of 2 206
45.3 iPhone 13 Pro 1 of 2 207
45.4 iPhone 13 Pro 2 of 2 208
45.5 iPhone 13 1 of 2 209
45.6 iPhone 13 2 of 2 210
45.7 iPhone 13 mini 1 of 2 211
45.8 iPhone 13 mini 2 of 2 212
45.9 iPhone 12 Pro Max 1 of 2 213
45.10 iPhone 12 Pro Max 2 of 2 214
45.11 iPhone 12 Pro 1 of 2 215
45.12 iPhone 12 Pro 2 of 2 216
45.13 iPhone 12 1 of 2 217
45.14 iPhone 12 2 of 2 218
45.15 iPhone 12 mini 1 of 2 219
45.16 iPhone 12 mini 2 of 2 220
45.17 iPhone SE (3rd generation) and iPhone SE (2nd generation) 221
45.18 iPhone 11 Pro Max 222
45.19 iPhone 11 Pro 223
45.20 iPhone 11 224
45.21 iPhone XS Max 225
45.22 iPhone XS 226
45.23 iPhone XR 227
45.24 iPhone X 228
45.25 iPhone 8 Plus 229
45.26 iPhone 8 230
45.27 iPhone 7 Plus 231
45.28 iPhone 7 232
45.29 iPhone 6s Plus 233
45.30 iPhone 6s 234
45.31 iPhone 6 Plus 235
45.32 iPhone 6 236
45.33 iPhone 5s and iPhone SE 237
45.34 iPhone 5c 238
45.35 iPhone 5 239
45.36 iPad Air (5th generation) and iPad Air (4th generation) 1 of 5 240
45.37 iPad Air (5th generation) and iPad Air (4th generation) 2 of 5 241
45.38 iPad Air (5th generation) and iPad Air (4th generation) 3 of 5 242

2022-07-08 | Copyright © 2022 Apple Inc. All Rights Reserved.

45.39 iPad Air (5th generation) and iPad Air (4th generation) 4 of 5 243
45.40 iPad Air (5th generation) and iPad Air (4th generation) 5 of 5 244
45.41 iPad mini (6th generation) 1 of 6 245
45.42 iPad mini (6th generation) 2 of 6 246
45.43 iPad mini (6th generation) 3 of 6 247
45.44 iPad mini (6th generation) 4 of 6 248
45.45 iPad mini (6th generation) 5 of 6 249
45.46 iPad mini (6th generation) 6 of 6 250
45.47 iPad (9th generation), iPad (8th generation) and iPad (7th generation) 1 of 4 251
45.48 iPad (9th generation), iPad (8th generation) and iPad (7th generation) 2 of 4 252
45.49 iPad (9th generation), iPad (8th generation) and iPad (7th generation) 3 of 4 253
45.50 iPad (9th generation), iPad (8th generation) and iPad (7th generation) 4 of 4 254
45.51 iPad Pro (12.9-inch) 5th Generation 1 of 5 255
45.52 iPad Pro (12.9-inch) 5th Generation 2 of 5 256
45.53 iPad Pro (12.9-inch) 5th Generation 3 of 5 257
45.54 iPad Pro (12.9-inch) 5th Generation 4 of 5 258
45.55 iPad Pro (12.9-inch) 5th Generation 5 of 5 259
45.56 iPad Pro (11-inch) 3rd Generation 1 of 5 260
45.57 iPad Pro (11-inch) 3rd Generation 2 of 5 261
45.58 iPad Pro (11-inch) 3rd Generation 3 of 5 262
45.59 iPad Pro (11-inch) 3rd Generation 4 of 5 263
45.60 iPad Pro (11-inch) 3rd Generation 5 of 5 264
45.61 iPad Pro (12.9-inch) 4th Generation 1 of 5 265
45.62 iPad Pro (12.9-inch) 4th Generation 2 of 5 266
45.63 iPad Pro (12.9-inch) 4th Generation 3 of 5 267
45.64 iPad Pro (12.9-inch) 4th Generation 4 of 5 268
45.65 iPad Pro (12.9-inch) 4th Generation 5 of 5 269
45.66 iPad Pro (11-inch) 2nd Generation 1 of 5 270
45.67 iPad Pro (11-inch) 2nd Generation 2 of 5 271
45.68 iPad Pro (11-inch) 2nd Generation 3 of 5 272
45.69 iPad Pro (11-inch) 2nd Generation 4 of 5 273
45.70 iPad Pro (11-inch) 2nd Generation 5 of 5 274
45.71 iPad Air (3rd generation) with Wi-Fi 1 of 3 275
45.72 iPad Air (3rd generation) with Wi-Fi 2 of 3 276
45.73 iPad Air (3rd generation) with Wi-Fi 3 of 3 277
45.74 iPad Air (3rd generation) with Wi-Fi + Cellular 1 of 3 278
45.75 iPad Air (3rd generation) with Wi-Fi + Cellular 2 of 3 279
45.76 iPad Air (3rd generation) with Wi-Fi + Cellular 3 of 3 280
45.77 iPad mini (5th generation) with Wi-Fi 1 of 3 281

2022-07-08 | Copyright © 2022 Apple Inc. All Rights Reserved.

45.78 iPad mini (5th generation) with Wi-Fi 2 of 3 282
45.79 iPad mini (5th generation) with Wi-Fi 3 of 3 283
45.80 iPad mini (5th generation) with Wi-Fi + Cellular 1 of 3 284
45.81 iPad mini (5th generation) with Wi-Fi + Cellular 2 of 3 285
45.82 iPad mini (5th generation) with Wi-Fi + Cellular 3 of 3 286
45.83 iPad Pro (12.9-inch) 3rd Generation 1 of 3 287
45.84 iPad Pro (12.9-inch) 3rd Generation 2 of 3 288
45.85 iPad Pro (12.9-inch) 3rd Generation 3 of 3 289
45.86 iPad Pro (11-inch) 1 of 3 290
45.87 iPad Pro (11-inch) 2 of 3 291
45.88 iPad Pro (11-inch) 3 of 3 292
45.89 iPad Pro (12.9-inch) 2nd Generation with Wi-Fi 293
45.90 iPad Pro (12.9-inch) 2nd Generation with Wi-Fi + Cellular 294
45.91 iPad Pro (12.9-inch) 2nd Generation Magnet/Hall Effect Sensors 1 of 2 295
45.92 iPad Pro (12.9-inch) 2nd Generation Magnet/Hall Effect Sensors 2 of 2 296
45.93 iPad Pro (10.5-inch) with Wi-Fi 297
45.94 iPad Pro (10.5-inch) with Wi-Fi + Cellular 298
45.95 iPad Pro (10.5-inch) Magnet/Hall Effect Sensors 1 of 2 299
45.96 iPad Pro (10.5-inch) Magnet/Hall Effect Sensors 2 of 2 300
45.97 iPad (5th and 6th generation) with Wi-Fi + Cellular 301
45.98 iPad (5th and 6th generation) Magnet/Hall Effect Sensors 1 of 2 302
45.99 iPad (5th and 6th generation) Magnet/Hall Effect Sensors 2 of 2 303
45.100 iPad Pro (9.7-inch) with Wi-Fi 304
45.101 iPad Pro (9.7-inch) with Wi-Fi + Cellular 305
45.102 iPad Pro (9.7-inch) Magnet/Hall Effect Sensors 1 of 2 306
45.103 iPad Pro (9.7-inch) Magnet/Hall Effect Sensors 2 of 2 307
45.104 iPad Pro (12.9-inch) 1st Generation with Wi-Fi 308
45.105 iPad Pro (12.9-inch) 1st Generation with Wi-Fi + Cellular 309
45.106 iPad Pro (12.9-inch) 1st Generation Magnet/Hall Effect Sensors 1 of 2 310
45.107 iPad Pro (12.9-inch) 1st Generation Magnet/Hall Effect Sensors 2 of 2 311
45.108 iPad mini 4 with Wi-Fi 312
45.109 iPad mini 4 with Wi-Fi + Cellular 313
45.110 iPad mini 4 Magnet/Hall Effect Sensors 314
45.111 iPad Air 2 with Wi-Fi 315
45.112 iPad Air 2 with Wi-Fi + Cellular 316
45.113 iPad mini 2 and iPad mini 3 with Wi-Fi 317
45.114 iPad mini 2 and iPad mini 3 with Wi-Fi + Cellular 318
45.115 iPad Air with Wi-Fi 319
45.116 iPad Air with Wi-Fi + Cellular 320

2022-07-08 | Copyright © 2022 Apple Inc. All Rights Reserved.

45.117 iPad mini with Wi-Fi 321
45.118 iPad mini with Wi-Fi + Cellular 322
45.119 iPad (4th generation) with Wi-Fi 323
45.120 iPad (4th generation) with Wi-Fi + Cellular 324
45.121 iPod touch (6th generation) and iPod touch (7th generation) 325
45.122 iPod touch (5th generation) 326
45.123 Apple Watch Series 7, 45 mm 327
45.124 Apple Watch Series 7, 41 mm 328
45.125 Apple Watch Series 6, 44 mm 329
45.126 Apple Watch Series 6, 40 mm 330
45.127 Apple Watch SE, 44 mm 331
45.128 Apple Watch SE, 40 mm 332
45.129 Apple Watch Series 5, 44 mm 333
45.130 Apple Watch Series 5, 40 mm 334
45.131 Apple Watch Series 5 Ceramic, 44 mm 335
45.132 Apple Watch Series 5 Ceramic, 40 mm 336
45.133 Apple Watch Series 4, 44 mm 337
45.134 Apple Watch Series 4, 40 mm 338
45.135 Apple Watch Series 3 Ceramic, 42 mm 339
45.136 Apple Watch Series 3 Ceramic, 38 mm 340
45.137 Apple Watch Series 3 Metal, 42 mm 341
45.138 Apple Watch Series 3 Metal, 38 mm 342
45.139 Apple Watch Series 2 Ceramic, 42 mm 343
45.140 Apple Watch Series 2 Ceramic, 38 mm 344
45.141 Apple Watch Series 2 Metal, 42 mm 345
45.142 Apple Watch Series 2 Metal, 38 mm 346
45.143 Apple Watch (1st generation) and Apple Watch Series 1, 42 mm 347
45.144 Apple Watch (1st generation) and Apple Watch Series 1, 38 mm 348
45.145 AirPods (3rd generation) MagSafe Charging Case 349
45.146 AirPods Pro Wireless Charging Case 350
45.147 AirPods Wireless Charging Case 351
45.148 AirPods (3rd generation) 352
45.149 AirPods Pro 353
45.150 AirPods (1st generation) and AirPods (2nd generation) 354
45.151 AirTag 355
45.152 Siri Remote (2nd generation) 356

Revision History 357
Added Content 357

Copyright © 2022 Apple Inc. All Rights Reserved.

Updated Content 357

2022-07-08 | Copyright © 2022 Apple Inc. All Rights Reserved.

Overview

1. Introduction

Note:
These Accessory Design Guidelines for Apple Devices ('Guidelines') are subject to the terms and conditions set forth on the final page of this document. By downloading, accessing, or otherwise utilizing these Guidelines, you agree to be bound by, and only utilize the Guidelines in accordance with, such terms and conditions.

These guidelines address:

- The physical design of cases, covers, screen overlays, and camera attachments for iOS devices.
- The specifications for hardware accessories that use the Bluetooth transport to communicate with iOS devices and Mac computers.
- The design of AC power adapters, battery packs, and Qi wireless power transmitters for iOS devices.
- The physical design of band accessories that are compatible with Apple Watch.

These guidelines do not address other aspects of accessory communication with iOS, iPadOS, tvOS, or watchOS devices. Instead, see the Apple MFi Licensing Program (page 20) and the Accessory Interface Specification (page 19).

2022-07-08 | Copyright © 2022 Apple Inc. All Rights Reserved.

2. Requirements

The use of the words *shall*, *shall not*, *required*, *prohibited*, *should*, *should not*, *recommended*, *not recommended*, *may*, *optional*, and *deprecated* in a statement have the following meanings:

- *shall*, or *required* means the statement is an absolute requirement.
- *shall not* or *prohibited* means the statement is an absolute prohibition.
- *should* or *recommended* means the full implications shall be understood before choosing a different course.
- *should not* or *not recommended* means the full implications shall be understood before choosing this course.
- *may* or *optional* means the statement is truly optional, and its presence or absence cannot be assumed.
- *deprecated* means the statement is provided for historical purposes only and is equivalent to 'shall not'.

2022-07-08 | Copyright © 2022 Apple Inc. All Rights Reserved.

3. Terminology

3.1 Device

Device refers to an iPhone, iPad, or iPod.

iOS device refers to an iPhone or iPod running iOS.

iPadOS device refers to an iPad running iPadOS.

Where appropriate, specific Apple product and operating system references will also be used.

3.2 Accessory

Accessory refers to any product that connects to a *device* via the interfaces described in this specification.

3.3 Component

A *component* is a functional unit, that is, a constituent part, of an accessory. Examples of components include:

- Data transport interface, such as a Lightning connector, USB connector, or Bluetooth radio.
- Power source, such as a battery.
- Human Interface Device (HID) Control Surface (page 18), such as a play/pause button.

A *component* may also refer to a collection, such as the keyboard portion of a keyboard/trackpad accessory.

3.4 Control Surface

A *control surface* is a human interface device (HID) component that enables user interaction with an accessory.

Examples of control surfaces include:

- Connectors

Copyright © 2022 Apple Inc. All Rights Reserved.

- Buttons
- Switches
- Rotary knobs
- Joysticks
- Touchscreens or touch-sensitive surfaces
- Microphones
- Motion/presence sensors

Specification references to specific types of control surfaces such as buttons or switches are only applicable to those control surface types. If a specification requirement calls for a physical button to be implemented, a physical button shall be present.

3.5 Direct User Action

A *direct user action* is defined as user interaction with an accessory via a Control Surface (page 18).

Accessories shall not autonomously perform user inputs unless explicitly authorized by the user.

Examples of direct user action include:

- Physical gestures, such as:
  - Attaching an accessory to a device.
  - Pressing a button.
  - Actuating a switch.
  - Turning a knob.
  - Interacting with a touchscreen.
  - Waving a hand.
  - Moving in/out of range (for wireless accessories).
- Voice input.

3.6 Captured Cable

A *captured cable* is a cable that has one end permanently attached to the accessory enclosure.

3.7 Accessory Interface Specification

The *Accessory Interface Specification* is available to members of the Apple MFi Licensing Program (page 20).

Copyright © 2022 Apple Inc. All Rights Reserved.

Use of some features requires accessory developers to be a member of the program and to integrate specific MFi hardware into the accessory.

3.8 Apple MFi Licensing Program

The Apple MFi licensing program provides access to specifications, components, connectors, and other resources to create accessories that communicate with devices.

See https://developer.apple.com/programs/mfi/ for more information.

2022-07-08 | Copyright © 2022 Apple Inc. All Rights Reserved.

Accessories

4. All Accessories

Requirements in this section apply to all accessories regardless of their supported features.

4.1 Scratches and Damage

Accessories shall not scratch or damage any device.

4.2 Compliance Testing

Accessories shall not assume evidence of functionality when attached to a device means the accessory is specification compliant. Such an approach does not account for future devices or software releases and runs a high risk of dependence on un-documented device behavior that is subject to change at any time.

If available, accessories should validate their design and implementation using the recommended test procedures for all supported features.

4.3 Integrated USB Receptacles

Accessories incorporating a USB receptacle for the purpose of drawing power from an external USB power source shall meet the following requirements:

- USB-B receptacles shall comply with the *USB Battery Charging 1.2* specification.
- USB-C receptacles shall comply with the requirements in Drawing Power (page 197).

4.4 User Supplied Cables and AC Power Adapters

Accessories intended for use with user-supplied cables and/or AC power adapters shall be designed to work with any cables, AC Power Adapters (page 64), or Battery Packs (page 67) compliant with this specification, including Apple branded cables and AC power adapters. Such accessories shall not declare compatibility with only Apple branded USB cables or AC power adapters.

Copyright © 2022 Apple Inc. All Rights Reserved.

This compatibility requirement applies to all aspects of user-supplied cables and power adapters. For example:

- Connector receptacles on accessories shall accommodate all spec-compliant connector overmolds, and any accessory opening surrounding the Lightning receptacle on a device shall provide sufficient clearance for spec-compliant connector overmolds.
- Accessories shall work with all cables compliant with the specification in regards to electrical DCR and SI.

Note:
Such accessories shall be tested with a wide variety of spec-compliant cables (including various lengths of the same cable if applicable) and AC power adapters during accessory development, in addition to Apple branded cables and AC power adapters.

4.5 Attachments

Accessories shall remain compliant with the specification when connected to any attachments designed for that accessory.

Examples of accessory attachments include, but are not limited to:

- Car or desk mounts for a case accessory.
- Wireless charging mats for a Lightning dongle or case accessory.
- Detachable barcode scanners/credit card readers for a Lightning dock accessory.

4.6 Magnetic Interference

Unless otherwise specified, Apple recommends avoiding the use of magnets and metal components in accessories.

Accessories claiming compatibility with a device with a digital compass (magnetometer) shall minimize interference with the digital compass and shall not repeatedly trigger compass recalibration.

Accessories claiming compatibility with a device with rear camera autofocus (AF) and/or optical image stabilization (OIS) shall not affect the operation of those features.

The following devices feature optical image stabilization:

- iPhone SE (3rd generation)
- iPhone 13 Pro Max
- iPhone 13 Pro
- iPhone 13

2022-07-08 | Copyright © 2022 Apple Inc. All Rights Reserved.

- iPhone 13 mini
- iPhone 12 Pro Max
- iPhone 12 Pro
- iPhone 12
- iPhone 12 mini
- iPhone SE (2nd generation)
- iPhone 11 Pro Max
- iPhone 11 Pro
- iPhone 11
- iPhone XS Max
- iPhone XS
- iPhone XR
- iPhone X
- iPhone 8 Plus
- iPhone 8
- iPhone 7 Plus
- iPhone 7
- iPhone 6s Plus
- iPhone 6 Plus
- iPad Pro (12.9-inch) 2nd Generation
- iPad Pro (10.5-inch)

4.7 Radio Frequency (RF) Performance

This section contains RF performance requirements and recommendations for accessories.

4.7.1 Materials and Coatings

Accessories should avoid use of:

- Metals
- Conductive materials or coatings
- Materials with high dielectric (permittivity >5 F/m)

Such materials absorb radio frequency energy and may impair or degrade the performance of antennas for cellular communication, GPS, Wi-Fi, Bluetooth, and NFC.

Examples include, but are not limited to:

- Steel, aluminum, magnesium, titanium, etc.
- Plastics with any carbon content, glass content, or metallic plating
- Metallic paints

2022-07-08 | Copyright © 2022 Apple Inc. All Rights Reserved.

- Black paints with high carbon loading
- White paints with high titanium dioxide loading
- Metallic Physical Vapor Deposition (PVD) coatings

4.7.2 Antenna Keep-Out

Antenna keep-out regions can be found in Device Dimensional Drawings (page 201).

Accessory Materials and Coatings (page 24) which absorb radio frequency energy located in the antenna keep-out region have a higher risk of degrading device's wireless performance.

4.7.3 Over The Air (OTA) Transmission/Reception

Accessories shall not excessively degrade device's RF transmission efficiency. This can be quantified by measuring Total Radiated Power (TRP) across all of the device's operating bands.

Accessories shall not excessively degrade device's RF reception sensitivity. This can be quantified by measuring Effective Isotropic Sensitivity (EIS) across all of the device's operating bands.

Accessories may have a higher risk of excessively degrading device's RF performance if they:

- Contain magnets.
- Intrude on device Antenna Keep-Out (page 25) zones.
- Contain active electronic circuitry, such as:
  - Bluetooth radios.
  - Switched-mode power supplies.
  - High speed data interfaces.

All accessory configurations shall be taken into account when designing for maximum RF compatibility. Examples include, but are not limited to:

- Accessory on/off.
- Accessory open/closed.
- Attachment present/not present, see Attachments (page 23).

4.7.4 Specific Absorption Rate (SAR)

A list of labs that can perform SAR testing with devices is available through the Apple MFi Licensing Program (page 20).

4.7.5 Near Field Communication (NFC)

Accessories shall not degrade device's NFC transaction performance.

2022-07-08 | Copyright © 2022 Apple Inc. All Rights Reserved.

Accessories may have a higher risk of degrading device's NFC transaction performance if they intrude on device Antenna Keep-Out (page 25) zones.

The following devices are NFC enabled:

- iPhone SE (3rd generation)
- iPhone 13 Pro Max
- iPhone 13 Pro
- iPhone 13
- iPhone 13 mini
- iPhone 12 Pro Max
- iPhone 12 Pro
- iPhone 12
- iPhone 12 mini
- iPhone SE (2nd generation)
- iPhone 11 Pro Max
- iPhone 11 Pro
- iPhone 11
- iPhone XS Max
- iPhone XS
- iPhone XR
- iPhone X
- iPhone 8 Plus
- iPhone 8
- iPhone 7 Plus
- iPhone 7
- iPhone SE
- iPhone 6s Plus
- iPhone 6s
- iPhone 6 Plus
- iPhone 6

4.8 Thermal Management

The accessory's supported temperature range shall be greater than or equal to the published temperature ranges of every device it claims compatibility with.

Copyright © 2022 Apple Inc. All Rights Reserved.

4.9 Tripod Connections

Tripod connections shall comply with ISO 1222:2010. See https://www.iso.org/standard/55918.html.

2022-07-08 | Copyright © 2022 Apple Inc. All Rights Reserved.

5. Cases

Cases are accessories substantially enclosing devices.

Accessories substantially enclosing devices shall comply with the requirements stated in this chapter unless the accessory supports other features in this specification whose requirements conflict with the requirements in this chapter.

If the case has multiple user-detachable components substantially enclosing the device, the requirements shall be applied to each component separately.

5.1 Product Design

A well-designed case will securely house a device without interfering with the device's operation. Significant factors in mechanical design include access to the device's sensors, controls, and connectors. Dimensional drawings for devices can be found in Device Dimensional Drawings (page 201).

5.1.1 Device Protection

Cases shall protect the device from a 1 m drop onto a hard paved surface in any orientation.

Exposed glass on the device shall not come within 0.85 mm of a flat surface, such as a table or floor, in any orientation when the case is attached. Ideally the glass should not come within 1.00 mm. Device protection should be achieved by creating features around the exposed glass to keep it away from the flat surface.

Care should be given to the design of the bottom of the case to achieve both device protection and provide access to device speakers, microphones, and connectors. For example, the bottom of iPhone X cases should:

- Not have an opening wider than 50 mm, see dimension 'A' in Figure 5-1 (page 29).
- Be made of polycarbonate (PC) at least 1.15 mm thick, see dimension 'B' in Figure 5-1 (page 29).

2022-07-08 | Copyright © 2022 Apple Inc. All Rights Reserved.

Figure 5-1 Device Protection

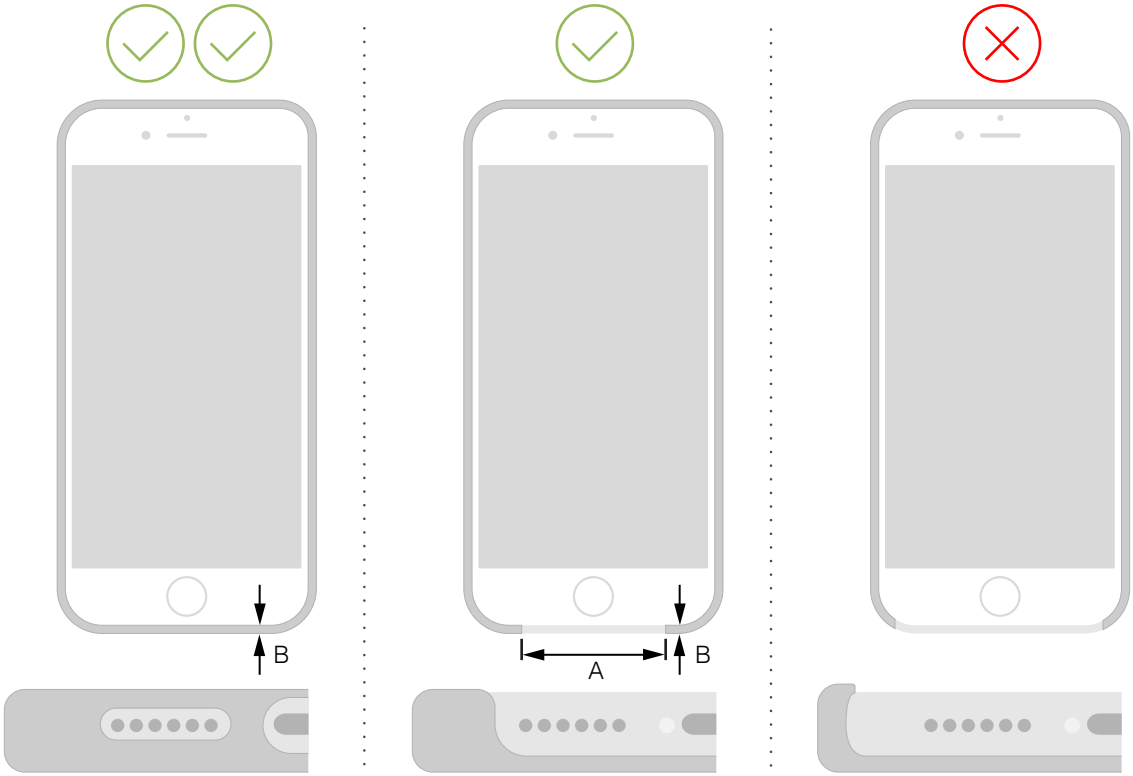

5.1.2 Access to Inputs and Interconnects

Cases shall readily permit user access to inputs and interconnects.

5.1.2.1 Access to Controls

Cases shall readily permit user access and operation of the device's mechanical controls, such as:

- Volume buttons
- Ring/Silent switch
- Side button
- Home/Touch ID sensor
- Home button
- Sleep/Wake button

5.1.2.2 Access to the Headset Jack

Cases shall provide easy access to a device's headset jack (if present).

The headset jack opening (that is, keep-out area):

- Shall be at least 6.0 mm in diameter and at most 14.0 mm deep.

Copyright © 2022 Apple Inc. All Rights Reserved.

- Should be at least 6.5 mm in diameter and at most 10.0 mm deep for the best compatibility with a range of headsets.

Headset jack openings shall be designed with enough margin to compensate for shifting or dimensional changes of the case material.

5.1.2.3 Access to the Lightning Connector

If the case is for a device with the Lightning connector, the opening (that is, keep-out area):

- Shall be at least 12.05 mm by 6.30 mm with full radii rounded edges.
- Should be at least 13.65 mm by 6.85 mm for best compatibility with a range of cables and docks.

Lightning connector openings shall be designed with enough margin to compensate for shifting or dimensional changes of the case material.

5.1.2.4 Touchscreen

Cases should not have any edges trapping water on the touchscreen when the device is held at a 30° angle relative to the horizon.

Cases shall allow a 120° opening, see Figure 5-2 (page 30), along the edges of a touchscreen's active area to ensure compatibility with touchscreen features. See Device Dimensional Drawings (page 201) for active areas.

Figure 5-2 Touchscreen keep-out angle

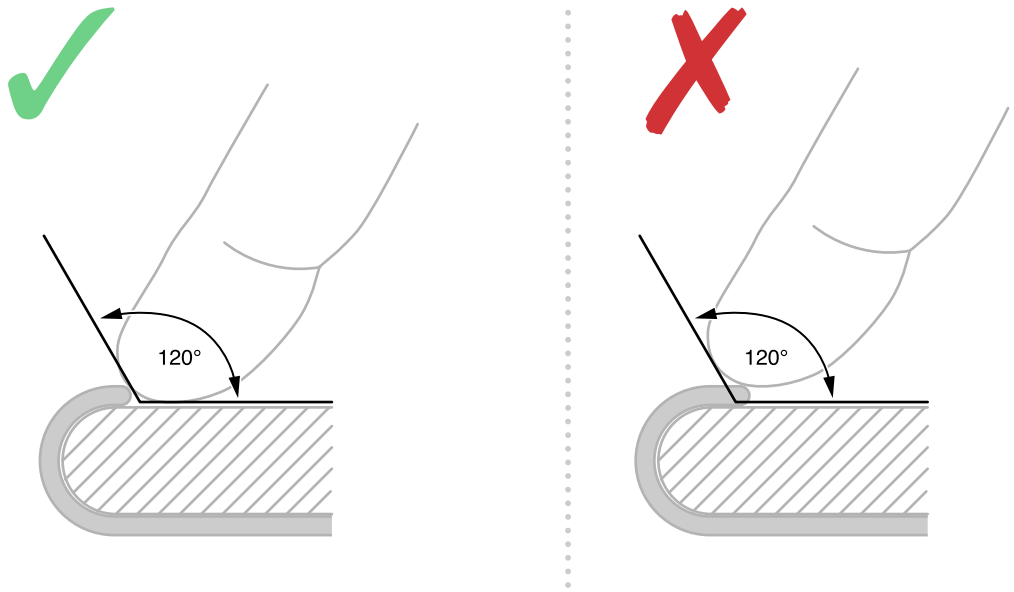

Copyright © 2022 Apple Inc. All Rights Reserved.

5.1.2.5 Edge Swipe Gestures

Users shall be able to easily use edge swipe gestures.

Examples of such gestures include, but are not limited to:

- Swipe in from the top edge for Control Center or Notification Center.
- Swipe in from the bottom edge for Home, App Switcher, or Reachability.
- Swipe in from the left edge in Messages or Mail to go back from a conversation.

The following devices make extensive use of edge swipe gestures in both portrait and landscape orientations:

- iPhone SE (3rd generation)
- iPhone 13 Pro Max
- iPhone 13 Pro
- iPhone 13
- iPhone 13 mini
- iPhone 12 Pro Max
- iPhone 12 Pro
- iPhone 12
- iPhone 12 mini
- iPhone SE (2nd generation)
- iPhone 11 Pro Max
- iPhone 11 Pro
- iPhone 11
- iPhone XS Max
- iPhone XS
- iPhone XR
- iPhone X
- iPad Air (5th generation)
- iPad mini (6th generation)
- iPad Pro (12.9-inch) 5th Generation
- iPad Pro (11-inch) 3rd Generation
- iPad Air (4th generation)
- iPad Pro (12.9-inch) 4th Generation
- iPad Pro (11-inch) 2nd Generation
- iPad Pro (12.9-inch) 3rd Generation
- iPad Pro (11-inch)

5.1.2.6 Edge Press Gestures

Users shall be able to easily use edge press gestures.

Copyright © 2022 Apple Inc. All Rights Reserved.

The following devices support edge press gestures:

- iPhone 8 Plus
- iPhone 8
- iPhone 7 Plus
- iPhone 7
- iPhone 6s Plus
- iPhone 6s

An edge press gesture from the left is used to bring up the task switcher in iOS 9.0 and later.

5.1.2.7 Cover Glass Contact

Cases claiming compatibility with the following devices should not contact the cover glass as defined in their dimensional drawings:

- iPhone SE (3rd generation)
- iPhone 13 Pro Max
- iPhone 13 Pro
- iPhone 13
- iPhone 13 mini
- iPhone 12 Pro Max
- iPhone 12 Pro
- iPhone 12
- iPhone 12 mini
- iPhone SE (2nd generation)
- iPhone 11 Pro Max
- iPhone 11 Pro
- iPhone 11
- iPhone XS Max
- iPhone XS
- iPhone XR
- iPhone X
- iPhone 8 Plus
- iPhone 8
- iPhone 7 Plus
- iPhone 7
- iPhone 6s Plus
- iPhone 6s
- iPhone 6 Plus
- iPhone 6

See Device Dimensional Drawings (page 201).

2022-07-08 | Copyright © 2022 Apple Inc. All Rights Reserved.

5.1.3 Dock Compatibility

The distance from bottom of the device to the outside of a case should not exceed 1.8 mm. This improves compatibility with Lightning docks such as the Apple iPhone Lightning Dock.

5.1.4 Wireless Power and Rear Pockets

Cases claiming compatibility with MagSafe or Qi wireless power, see Device Power (Inductive) (page 113), shall not have rear pockets or holders for credit cards, RFID cards, or other similar items. Cards may be damaged and/or impact wireless charging performance.

5.2 Acoustics

Cases shall not impair or degrade the acoustic performance of a device.

5.2.1 Call Quality

Cases shall not impair or degrade the user's experience making and receiving audio calls over a cellular network or audio/video calls using FaceTime in both handset and speakerphone modes. Cases should not change the frequency response of the speakers or microphones. In addition, the user should not hear any distortion or echo resulting from using the case.

Cases shall not obstruct any microphones during a phone call. Note that occluding any microphones can result in call quality degradation.

5.2.2 Speaker to Microphone Coupling

Cases shall not facilitate the conduction of sound from any speaker to any microphone. Such sound conduction may cause echoing in phone calls.

5.2.3 Speaker/Microphone Openings

Device speaker/microphone port locations vary from model to model, see Device Dimensional Drawings (page 201).

5.2.3.1 Thin Cases (≤2.25 mm)

Microphone/speaker openings in thin cases should:

- Be offset at least 2.0 mm from the edge of any device speaker/microphone port.
- Be at most 1.5 mm thick along their inner diameter.
- Have a maximum 45° incoming angle to their inner diameter.

2022-07-08 | Copyright © 2022 Apple Inc. All Rights Reserved.

- Maintain a proper seal against the device between speaker/microphone ports.

Figure 5-3 Microphone/speaker opening recommendations for thin cases

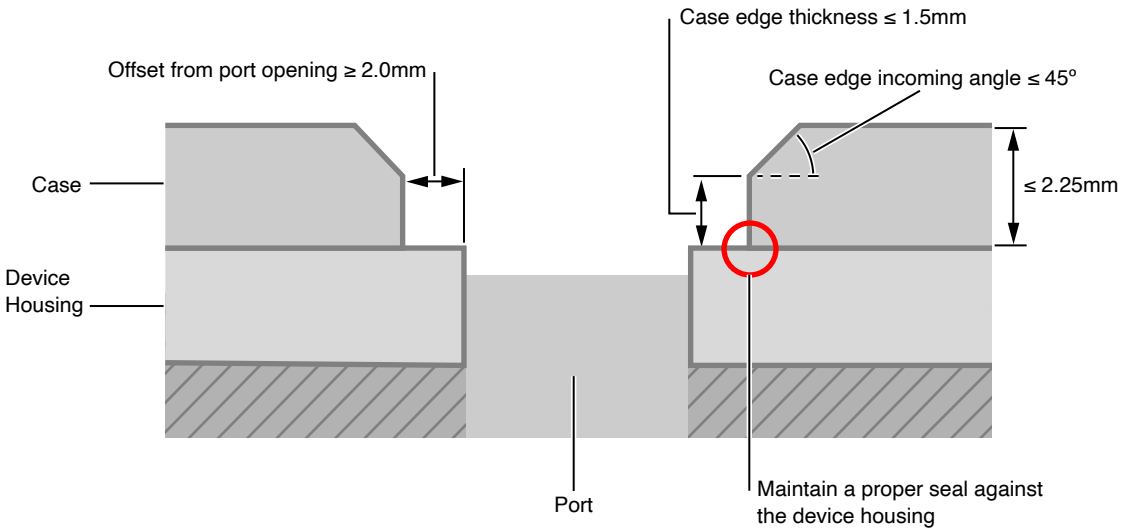

5.2.3.2 Thick Cases (>2.25 mm)

Speaker and microphone openings should be channeled independently and without interruption to/from the outside surface of a thick case.

Figure 5-4 Thick case acoustic channels

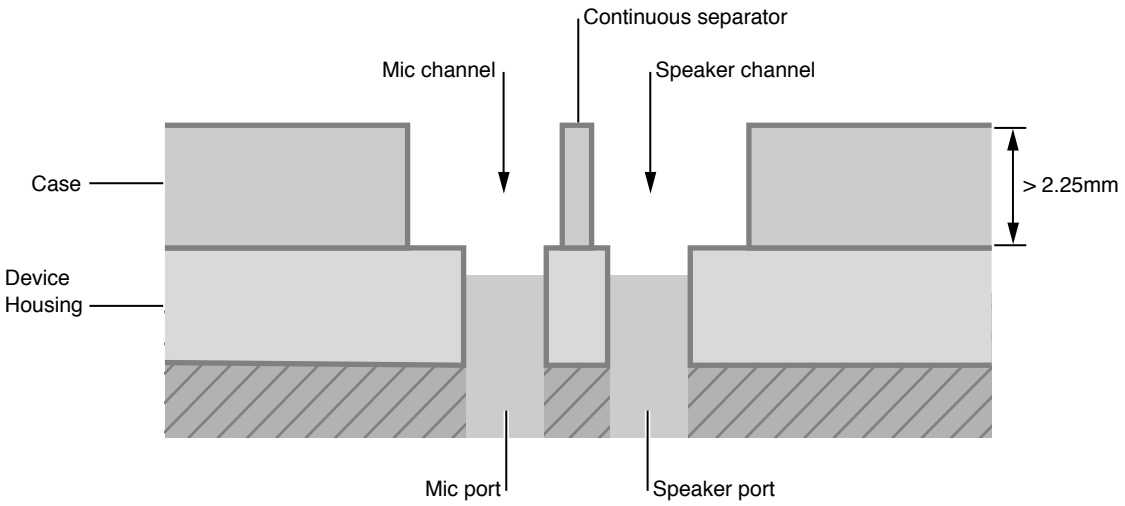

Thick cases should maximize exit separation between speaker and microphone channels.

Copyright © 2022 Apple Inc. All Rights Reserved.

Figure 5-5 Thick case microphone and speaker exit separation

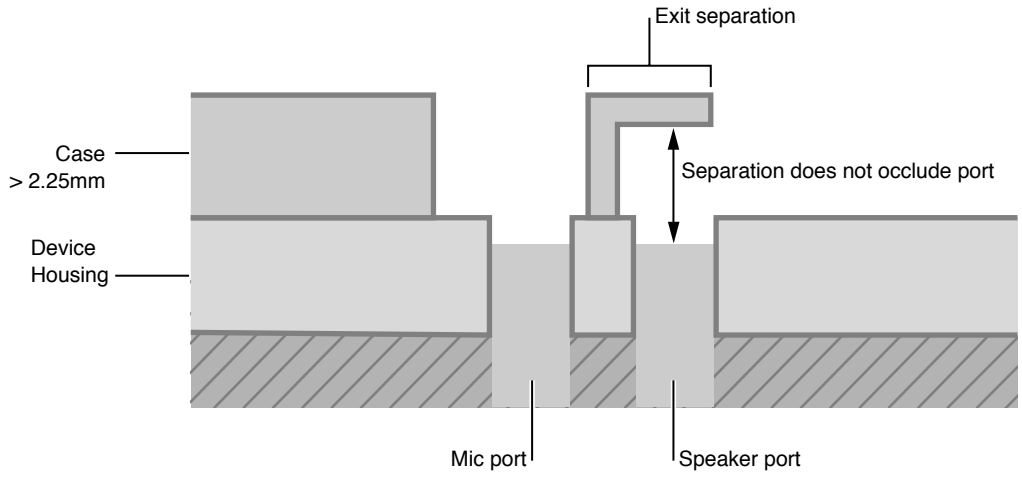

Thick case channels may act as a resonance chamber and detune microphone/speaker frequency response. The resulting frequency response may vary according to channel size/shape.

If a thick case does not maintain a proper seal against the device between microphone/speaker channels, the case itself may become an acoustic chamber.

Figure 5-6 Improper thick case seal

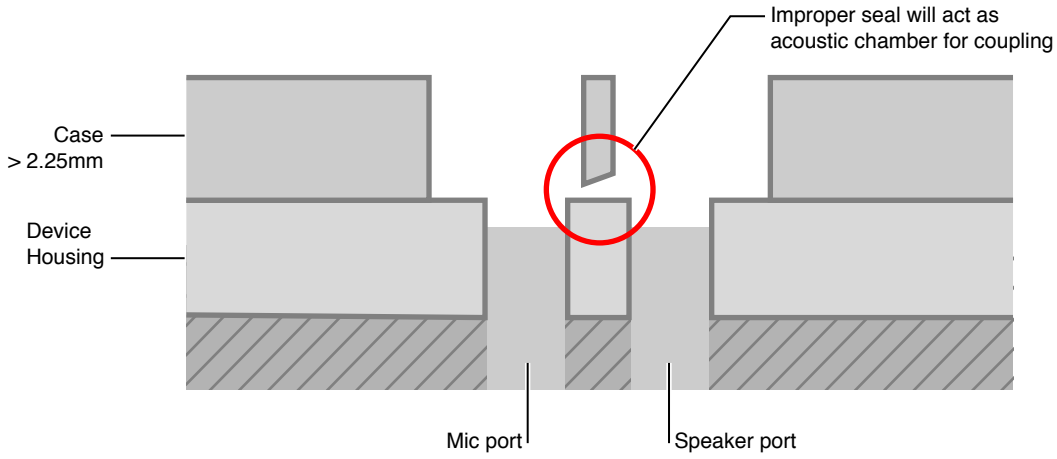

Copyright © 2022 Apple Inc. All Rights Reserved.

5.3 Ambient Light Sensor and Proximity Sensor

The ambient light sensor and proximity sensor locations for various devices are indicated in the Device Dimensional Drawings (page 201). Some of the dimensional drawings specify a keep-out area around these sensors. No material shall cover these sensors or their keep-out areas; this includes Screen Overlays (page 59).

5.4 Taptic Engine

Cases should not cause substantial change in the feel of the device's Taptic Engine.

The following devices contain a Taptic Engine:

- iPhone SE (3rd generation)
- iPhone 13 Pro Max
- iPhone 13 Pro
- iPhone 13
- iPhone 13 mini
- iPhone 12 Pro Max
- iPhone 12 Pro
- iPhone 12
- iPhone 12 mini
- iPhone SE (2nd generation)
- iPhone 11 Pro Max
- iPhone 11 Pro
- iPhone 11
- iPhone XS Max
- iPhone XS
- iPhone XR
- iPhone X
- iPhone 8 Plus
- iPhone 8
- iPhone 7 Plus
- iPhone 7
- iPhone 6s Plus
- iPhone 6s

5.5 Magnetic Interference

Cases shall not interfere with the device's:

Copyright © 2022 Apple Inc. All Rights Reserved.

- Magnetic compass.
- Rear camera autofocus.
- Rear camera optical image stabilization (OIS), if present.

See Magnetic Interference (page 23) for additional details.

5.6 Home Button / Touch ID Sensor

Accessories shall not inhibit use of the device's Home button / Touch ID sensor including features such as Touch ID fingerprint recognition.

Home button / Touch ID sensor keep-outs for devices can be found in Device Dimensional Drawings (page 201).

Additionally, cases overlaying the iPhone SE (3rd generation), iPhone SE (2nd generation), iPhone 8 Plus, iPhone 8, iPhone 7 Plus, and iPhone 7 Home button / Touch ID sensor may cause users to have difficulty using the Home button / Touch ID sensor.

5.7 Camera

The camera field of view (FOV) and the illumination provided by the flash are designed for each device camera. It is exceptionally important manufacturers consult Device Dimensional Drawings (page 201) for each device and do not assume parameters are shared between devices.

Images from the camera may be affected by the geometry, color, and surface finish of the case.

> **Note:**
> Apple recommends a semi-gloss black material or coating around the camera and flash opening.

5.7.1 Geometry

The camera lens FOV shall not be blocked. Making an opening too small around the camera and flash may block the lens FOV and the illumination from the flash. Blocking the FOV may cause vignetting in the image, where one or more corners of the image are darker than the center. Blocking marginal rays just outside the lens FOV may also reduce the sharpness and contrast of the image. Blocking flash illumination may cause haze in the image, resulting in reduced contrast. See Device Dimensional Drawings (page 201) for the camera keep-out.

Copyright © 2022 Apple Inc. All Rights Reserved.

Case openings shall not be designed in a manner directing stray light into the camera lens. If the opening is too narrow or too steep, it may reflect light into the camera lens washing out the image or adding a color cast. Adding a chamfer to the openings near the camera may help direct stray light away from the camera lens. When the device includes a flash, a narrow or steep opening may reflect light from the camera and flash opening back into the camera lens. This may cause images to appear washed out or cause artifacts. Designers should also ensure mechanical keep-outs as outlined in the Device Dimensional Drawings (page 201) are maintained with worst-case X-Y placement tolerances to minimize the risk of haze.

5.7.2 Color

Light reflected from a case may carry the color of the case. Black material or black coatings may help avoid color bleeding into the camera lens. The darker the color the less likely light from a flash or external source may be reflected off the case and into the camera lens.

5.7.3 Surface Finish

Semi-gloss materials may help direct reflected light away from the camera lens. Matte or diffusing materials scatter light in all directions increasing the likelihood light from a flash or a strong external light source will be reflected into a camera lens.

5.7.4 Image Degradation Examples

Figure 5-7 Sample image degradation by image blocking in an ambient condition

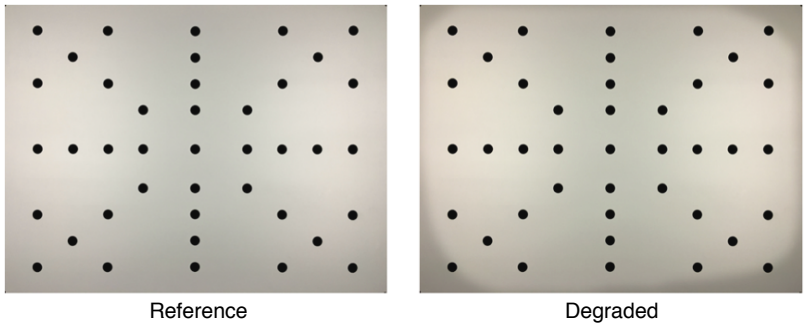

Copyright © 2022 Apple Inc. All Rights Reserved.

Figure 5-8 Sample image degradation by color shift through accessory with strong color

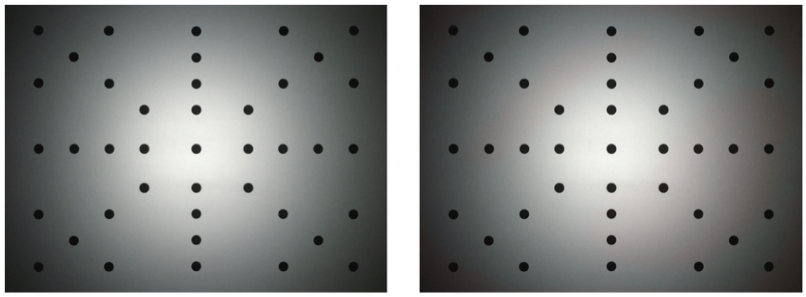

Reference Degraded

Figure 5-9 Sample image degradation by flash interference

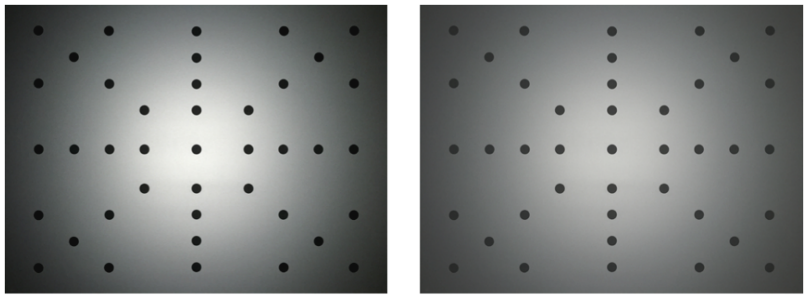

Reference Degraded

5.8 Reliability

Cases shall be tested to verify they will withstand long-term use under typical use conditions, and will not impair or functionally degrade a device, cause damage to the device or its immediate surroundings, or adversely affect the user.

5.8.1 Device Insertion and Removal

Cases shall hold the device securely while permitting easy insertion and removal. A case and the enclosed device shall not be damaged by the repeated insertion and removal of the device from the case under conditions representative of long-term use in a variety of environments.

5.8.2 Colorfastness

Dyes, inks, or coatings in or on the case shall not bleed color onto either the device or its user, particularly while the case is in contact with common substances such as water or sunscreen lotions.

2022-07-08 | Copyright © 2022 Apple Inc. All Rights Reserved.

5.9 Environmental

Cases shall comply with applicable environmental regulations for the regions in which such accessories are to be sold, as well as applicable substance or material restrictions including:

- Organic tin compounds, PFOS, PFOA, phthalates, azo dyes, polybrominated biphenyls (PBBs) and PAHs, per requirements of the EU REACh regulation EC 1907/2006.
- Nickel leach rate on surfaces in prolonged skin contact, per requirements of the EU REACh regulation EC 1907/2006.
- Cadmium, lead, hexavalent chromium, and nickel, per requirements of EU Directive 2009/48/EC.
- Natural rubber latex, per requirements of EU Directive EC 93/42/EEC.
- Dimethylfumarate (DMFu), per requirements of EU Regulation 412/2012.
- pH and Formaldehyde, per requirements of China GB 18401 for textiles and China GB 20400 for leather.
- Endangered species of flora and fauna in products or packaging (US Lacey Act).
- Polybrominated diphenyl ethers (PBDE).
- Compliance with California proposition 65, as applicable.

5.10 Test Procedures

5.10.1 Device Models

Case testing procedures vary depending on the device they enclose.

5.10.1.1 iPhone 13 Pro Max

Table 5-1 iPhone 13 Pro Max Case Testing Matrix

Test	Using	Notes
Product Design (page 50)	iPhone 13 Pro Max	
MagSafe Case Magnet Array (page 133)	iPhone 13 Pro Max	Cases supporting MagSafe only.
Taptic Engine (page 53)	iPhone 13 Pro Max	
Acoustics (page 54)	iPhone 13 Pro Max	

5.10.1.2 iPhone 13 Pro

Table 5-2 iPhone 13 Pro Case Testing Matrix

Test	Using	Notes
Product Design (page 50)	iPhone 13 Pro	

Copyright © 2022 Apple Inc. All Rights Reserved.

Test	Using	Notes
MagSafe Case Magnet Array (page 133)	iPhone 13 Pro	Cases supporting MagSafe only.
Taptic Engine (page 53)	iPhone 13 Pro	
Acoustics (page 54)	iPhone 13 Pro	

5.10.1.3 iPhone 13

Table 5-3 iPhone 13 Case Testing Matrix

Test	Using	Notes
Product Design (page 50)	iPhone 13	
MagSafe Case Magnet Array (page 133)	iPhone 13	Cases supporting MagSafe only.
Taptic Engine (page 53)	iPhone 13	
Acoustics (page 54)	iPhone 13	

5.10.1.4 iPhone 13 mini

Table 5-4 iPhone 13 mini Case Testing Matrix

Test	Using	Notes
Product Design (page 50)	iPhone 13 mini	
MagSafe Case Magnet Array (page 133)	iPhone 13 mini	Cases supporting MagSafe only.
Taptic Engine (page 53)	iPhone 13 mini	
Acoustics (page 54)	iPhone 13 mini	

5.10.1.5 iPhone 12 Pro Max

Table 5-5 iPhone 12 Pro Max Case Testing Matrix

Test	Using	Notes
Product Design (page 50)	iPhone 12 Pro Max	
MagSafe Case Magnet Array (page 133)	iPhone 12 Pro Max	Cases supporting MagSafe only.
Taptic Engine (page 53)	iPhone 12 Pro Max	
Acoustics (page 54)	iPhone 12 Pro Max	

2022-07-08 | Copyright © 2022 Apple Inc. All Rights Reserved.

5.10.1.6 iPhone 12 Pro

Table 5-6 iPhone 12 Pro Case Testing Matrix

Test	Using	Notes
Product Design (page 50)	iPhone 12 Pro	
MagSafe Case Magnet Array (page 133)	iPhone 12 Pro	Cases supporting MagSafe only.
Taptic Engine (page 53)	iPhone 12 Pro	
Acoustics (page 54)	iPhone 12 Pro	

5.10.1.7 iPhone 12

Table 5-7 iPhone 12 Case Testing Matrix

Test	Using	Notes
Product Design (page 50)	iPhone 12	
MagSafe Case Magnet Array (page 133)	iPhone 12	Cases supporting MagSafe only.
Taptic Engine (page 53)	iPhone 12	
Acoustics (page 54)	iPhone 12	

5.10.1.8 iPhone 12 mini

Table 5-8 iPhone 12 mini Case Testing Matrix

Test	Using	Notes
Product Design (page 50)	iPhone 12 mini	
MagSafe Case Magnet Array (page 133)	iPhone 12 mini	Cases supporting MagSafe only.
Taptic Engine (page 53)	iPhone 12 mini	
Acoustics (page 54)	iPhone 12 mini	

5.10.1.9 iPhone 11 Pro Max

Table 5-9 iPhone 11 Pro Max Case Testing Matrix

Test	Using	Notes
Product Design (page 50)	iPhone 11 Pro Max	
Taptic Engine (page 53)	iPhone 11 Pro Max	
Acoustics (page 54)	iPhone 11 Pro Max	

2022-07-08 | Copyright © 2022 Apple Inc. All Rights Reserved.

5.10.1.10 iPhone 11 Pro

Table 5-10 iPhone 11 Pro Case Testing Matrix

Test	Using	Notes
Product Design (page 50)	iPhone 11 Pro	
Taptic Engine (page 53)	iPhone 11 Pro	
Acoustics (page 54)	iPhone 11 Pro	

5.10.1.11 iPhone 11

Table 5-11 iPhone 11 Case Testing Matrix

Test	Using	Notes
Product Design (page 50)	iPhone 11	
Taptic Engine (page 53)	iPhone 11	
Acoustics (page 54)	iPhone 11	

5.10.1.12 iPhone XS Max

Table 5-12 iPhone XS Max Case Testing Matrix

Test	Using	Notes
Product Design (page 50)	iPhone XS Max	
Taptic Engine (page 53)	iPhone XS Max	
Acoustics (page 54)	iPhone XS Max	

5.10.1.13 iPhone XS

Table 5-13 iPhone XS Case Testing Matrix

Test	Using	Notes
Product Design (page 50)	iPhone XS	
Taptic Engine (page 53)	iPhone XS	
Acoustics (page 54)	iPhone XS	

2022-07-08 | Copyright © 2022 Apple Inc. All Rights Reserved.

5.10.1.14 iPhone XR

Table 5-14 iPhone XR Case Testing Matrix

Test	Using	Notes
Product Design (page 50)	iPhone XR	
Taptic Engine (page 53)	iPhone XR	
Acoustics (page 54)	iPhone XR	

5.10.1.15 iPhone X

Table 5-15 iPhone X Case Testing Matrix

Test	Using	Notes
Product Design (page 50)	iPhone X	
Taptic Engine (page 53)	iPhone X	
Acoustics (page 54)	iPhone X	

5.10.1.16 iPhone 8 Plus/iPhone 7 Plus

Table 5-16 iPhone 8 Plus/iPhone 7 Plus Case Testing Matrix

Test	Using	Notes
Product Design (page 50)	iPhone 8 Plus and iPhone 7 Plus	
Taptic Engine (page 53)	iPhone 8 Plus and iPhone 7 Plus	
Home Button / Touch ID Sensor Overlays (page 53)	iPhone 8 Plus and iPhone 7 Plus	
Acoustics (page 54)	iPhone 8 Plus and iPhone 7 Plus	

It is not possible for a case to claim compatibility with only the iPhone 8 Plus or only the iPhone 7 Plus.

5.10.1.17 iPhone SE (3rd generation)/iPhone SE (2nd generation)/iPhone 8/iPhone 7

Table 5-17 iPhone SE (3rd generation)/iPhone SE (2nd generation)/iPhone 8/iPhone 7 Case Testing Matrix

Test	Using	Notes
Product Design (page 50)	iPhone SE (3rd generation), iPhone SE (2nd generation), iPhone 8, and iPhone 7	
Taptic Engine (page 53)	iPhone SE (3rd generation), iPhone SE (2nd generation), iPhone 8, and iPhone 7	

2022-07-08 | Copyright © 2022 Apple Inc. All Rights Reserved.

Test	Using	Notes
Home Button / Touch ID Sensor Overlays (page 53)	iPhone SE (3rd generation), iPhone SE (2nd generation), iPhone 8, and iPhone 7	
Acoustics (page 54)	iPhone SE (3rd generation), iPhone SE (2nd generation), iPhone 8, and iPhone 7	

It is not possible for a case to claim compatibility with only the iPhone SE (3rd generation), only the iPhone SE (2nd generation), only the iPhone 8, or only the iPhone 7.

5.10.1.18 iPhone 6s Plus/iPhone 6 Plus

Table 5-18 iPhone 6s Plus/iPhone 6 Plus Case Testing Matrix

Test	Using	Notes
Product Design (page 50)	iPhone 6s Plus and iPhone 6 Plus	
Taptic Engine (page 53)	iPhone 6s Plus	

It is not possible for a case to claim compatibility with only the iPhone 6s Plus or only the iPhone 6 Plus.

5.10.1.19 iPhone 6s/iPhone 6

Table 5-19 iPhone 6s/iPhone 6 Case Testing Matrix

Test	Using	Notes
Product Design (page 50)	iPhone 6s and iPhone 6	
Taptic Engine (page 53)	iPhone 6s	

It is not possible for a case to claim compatibility with only the iPhone 6s or only the iPhone 6.

5.10.1.20 iPhone 5/iPhone 5s/iPhone SE

Table 5-20 iPhone 5/iPhone 5s/iPhone SE Case Testing Matrix

Test	Using	Notes
Product Design (page 50)	iPhone SE	

It is not possible for a case to claim compatibility with only the iPhone 5 or only the iPhone 5s or only the iPhone SE.

Copyright © 2022 Apple Inc. All Rights Reserved.

5.10.1.21 iPhone 5c

Table 5-21 iPhone 5c Case Testing Matrix

Test	Using	Notes
Product Design (page 50)	iPhone 5c	

5.10.1.22 iPad mini (6th generation)

Table5-22 iPad mini (6th generation) Case Testing Matrix

Test	Using	Notes
Product Design (page 50)	iPad mini (6th generation)	

5.10.1.23 iPad (7th generation)/iPad (8th generation)/iPad (9th generation)

Table 5-23 iPad (7th generation)/iPad (8th generation)/iPad (9th generation) Case Testing Matrix

Test	Using	Notes
Product Design (page 50)	iPad (7th generation), iPad (8th generation), and iPad (9th generation)	

It is not possible for a case to claim compatibility with only the iPad (7th generation) or only the iPad (8th generation) or only the iPad (9th generation).

5.10.1.24 iPad Pro (12.9-inch) 5th Generation

Table 5-24 iPad Pro (12.9-inch) 5th Generation Case Testing Matrix

Test	Using	Notes
Product Design (page 50)	iPad Pro (12.9-inch) 5th Generation	

5.10.1.25 iPad Pro (11-inch) 3rd Generation

Table 5-25 iPad Pro (11-inch) 3rd Generation Case Testing Matrix

Test	Using	Notes
Product Design (page 50)	iPad Pro (11-inch) 3rd Generation	

2022-07-08 | Copyright © 2022 Apple Inc. All Rights Reserved.

5.10.1.26 iPad Air (5th generation)/iPad Air (4th generation)

Table 5-26 iPad Air (5th generation)/iPad Air (4th generation) Case Testing Matrix

Test	Using	Notes
Product Design (page 50)	iPad Air (5th generation)	

5.10.1.27 iPad Pro (12.9-inch) 4th Generation

Table 5-27 iPad Pro (12.9-inch) 4th Generation Case Testing Matrix

Test	Using	Notes
Product Design (page 50)	iPad Pro (12.9-inch) 4th Generation	

5.10.1.28 iPad Pro (11-inch) 2nd Generation

Table 5-28 iPad Pro (11-inch) 2nd Generation Case Testing Matrix

Test	Using	Notes
Product Design (page 50)	iPad Pro (11-inch) 2nd Generation	

5.10.1.29 iPad Air (3rd generation)

Table 5-29 iPad Air (3rd generation) Case Testing Matrix

Test	Using	Notes
Product Design (page 50)	iPad Air (3rd generation)	

5.10.1.30 iPad mini (5th generation)

Table 5-30 iPad mini (5th generation) Case Testing Matrix

Test	Using	Notes
Product Design (page 50)	iPad mini (5th generation)	

2022-07-08 | Copyright © 2022 Apple Inc. All Rights Reserved.

5.10.1.31 iPad Pro (12.9-inch) 3rd Generation

Table 5-31 iPad Pro (12.9-inch) 3rd Generation Case Testing Matrix

Test	Using	Notes
Product Design (page 50)	iPad Pro (12.9-inch) 3rd Generation	

5.10.1.32 iPad Pro (11-inch)

Table 5-32 iPad Pro (11-inch) Case Testing Matrix

Test	Using	Notes
Product Design (page 50)	iPad Pro (11-inch)	

5.10.1.33 iPad Pro (10.5-inch)

Table 5-33 iPad Pro (10.5-inch) Case Testing Matrix

Test	Using	Notes
Product Design (page 50)	iPad Pro (10.5-inch)	

5.10.1.34 iPad Pro (12.9-inch) 2nd Generation

Table 5-34 iPad Pro (12.9-inch) 2nd Generation Case Testing Matrix

Test	Using	Notes
Product Design (page 50)	iPad Pro (12.9-inch) 2nd Generation	

5.10.1.35 iPad (5th and 6th generation)

Table 5-35 iPad (5th and 6th generation) Case Testing Matrix

Test	Using	Notes
Product Design (page 50)	iPad (5th generation) or iPad (6th generation)	

2022-07-08 | Copyright © 2022 Apple Inc. All Rights Reserved.

5.10.1.36 iPad Pro (9.7-inch)

Table 5-36 iPad Pro (9.7-inch) Case Testing Matrix

Test	Using	Notes
Product Design (page 50)	iPad Pro (9.7-inch)	

5.10.1.37 iPad Pro (12.9-inch) 1st Generation

Table5-37 iPad Pro (12.9-inch) 1st Generation Case Testing Matrix

Test	Using	Notes
Product Design (page 50)	iPad Pro (12.9-inch) 1st Generation	

5.10.1.38 iPad mini 4

Table 5-38 iPad mini 4 Case Testing Matrix

Test	Using	Notes
Product Design (page 50)	iPad mini 4	

5.10.1.39 iPad mini/iPad mini 2/iPad mini 3

Table 5-39 iPad mini/iPad mini 2/iPad mini 3 Case Testing Matrix

Test	Using	Notes
Product Design (page 50)	iPad mini 3	

It is not possible for a case to claim compatibility with only the iPad mini or only the iPad mini 2 or only the iPad mini 3.

2022-07-08 | Copyright © 2022 Apple Inc. All Rights Reserved.

5.10.1.40 iPad Air 2

Table 5-40 iPad Air 2 Case Testing Matrix

Test	Using	Notes
Product Design (page 50)	iPad Air 2	

5.10.1.41 iPad Air

Table 5-41 iPad Air Case Testing Matrix

Test	Using	Notes
Product Design (page 50)	iPad Air	

5.10.1.42 iPad (4th generation)

Table 5-42 iPad (4th generation) Case Testing Matrix

Test	Using	Notes
Product Design (page 50)	iPad (4th generation)	

5.10.1.43 iPod touch (5th generation)/iPod touch (6th generation)/iPod touch (7th generation)

Table 5-43 iPod touch (5th generation)/iPod touch (6th generation)/iPod touch (7th generation) Case Testing Matrix

Test	Using	Notes
Product Design (page 50)	iPod touch (7th generation)	

It is not possible for a case to claim compatibility with only the iPod touch (5th generation), iPod touch (6th generation) or the iPod touch (7th generation).

5.10.2 Product Design

5.10.2.1 Equipment

- Device

Copyright © 2022 Apple Inc. All Rights Reserved.

- Apple Lightning Digital AV Adapter
- Vernier calipers
- 0.85 mm plastic feeler gauge
- EarPods with 3.5 mm Headphone Plug

5.10.2.2 Procedure

1. Insert the device into the case.
2. Verify that the device completely fits inside the case.
3. Verify the device is not loose.
4. Verify that all buttons are accessible.
5. Inspect for button feel. Verify that all buttons are not too hard to press or take a lot of effort to press.
6. If the device has an Apple Lightning receptacle:
   a. Insert the Apple Lightning Digital AV Adapter into the Lightning receptacle and verify that it fits.
   b. Using vernier calipers, measure the Lightning connector opening on the case. Verify that the opening is measured to be at least 12.05 mm by 6.30 mm.
7. If the device has a 3.5 mm headset jack:
   a. Insert EarPods with 3.5 mm Headphone Plug into the headset jack of the device and verify it fits.
   b. Using vernier calipers, measure the headset jack opening on the case. Verify that the opening is measured to be at least 6 mm in diameter and no more than 14 mm deep.
8. If the device has a Touch ID sensor, use vernier calipers to verify that the case is at least 2 mm away from the Touch ID sensor.

2022-07-08 | Copyright © 2022 Apple Inc. All Rights Reserved.

9. Verify that the case is always proud of the feeler gauge when the gauge is placed at each corner of the device. See Figure 5-10 (page 52).

Figure 5-10 Device proudness test

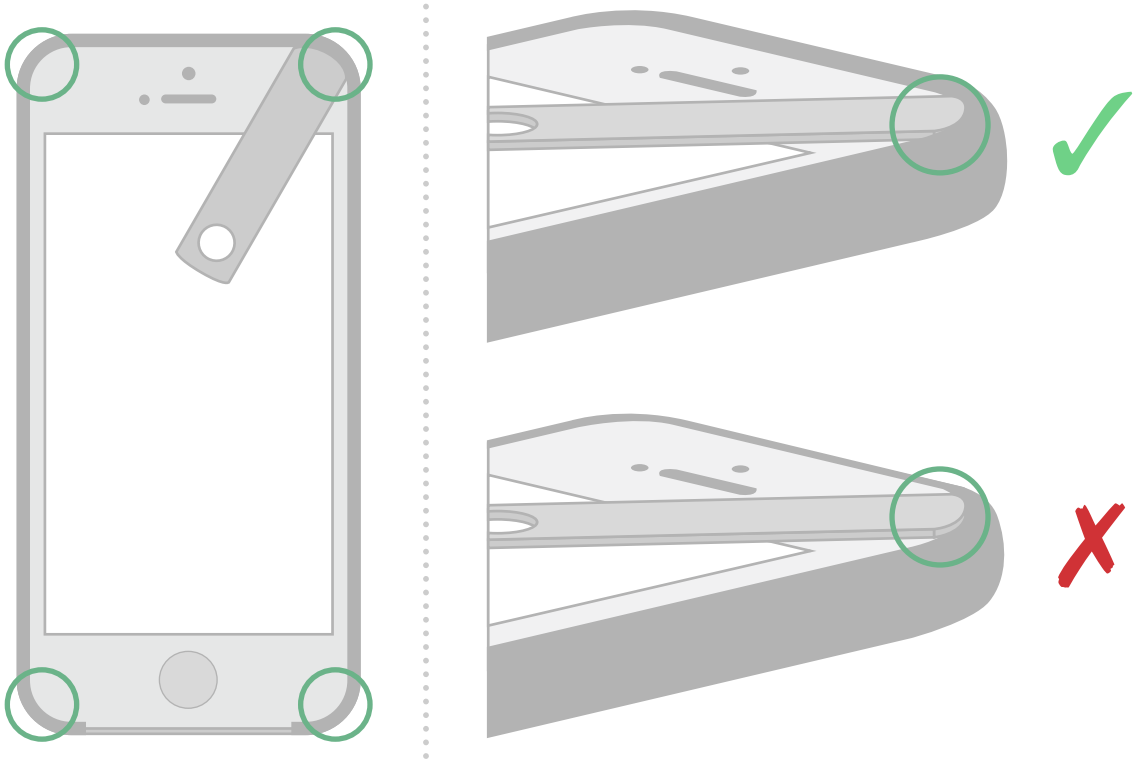

10. Set the device flat on its face (screen facing down).
11. Roll the device towards any side that is not enclosed by the case until the gap between the device's exposed glass and flat surface is smallest.
12. Verify that the feeler gauge fits into the gap between the device's exposed glass and flat surface.

Figure 5-11 Device gap test

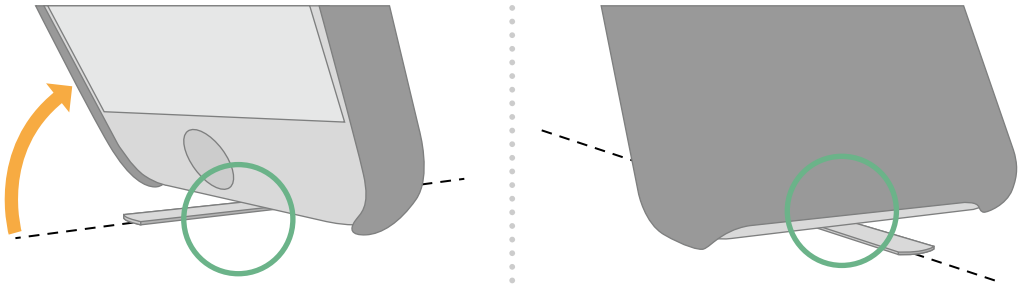

13. If the case has an overlay, verify that there are no air gaps introduced between it and the touchscreen.

Copyright © 2022 Apple Inc. All Rights Reserved.

5.10.3 Taptic Engine

5.10.3.1 Equipment

- Two devices A and B, same model
- Table

5.10.3.2 Procedure

1. Attach the case to device B.
2. Place device A on top of the table.
3. Place device B on top of the table next to device A.
4. Compare the Taptic Engine feedback between device A and device B for each of the following tasks:
   a. Go to: *Settings* > *Sound* & *Haptics*, set *Vibrate on Silent* to the on position.
   b. Toggle the Ring/Silent switch.
   c. Connect a charger to both devices.
   d. Go to: *Settings* > *Notifications* > *Phone* > *Sounds*, select *Reflection (Default)*.
   e. Go to: *Settings* > *Notifications* > *Messages* > *Sounds*, select *Note (Default)*.
   f. Go to the Home screen.
   g. Trigger a Quick Actions menu by applying pressure to the Settings app. Continue applying pressure.
   h. Slide your finger across the Quick Actions menu and release when Wi-Fi is selected.
   i. Go to the Home screen.
   j. Apply pressure to the Home app.
   k. Go to: Clock app and select *Timer* on the bottom right.
   l. Scroll through the hours and minutes.
5. If the device has a Home button:
   a. Go to: *Settings* > *General* > *Home Button*, tap option 2.
   b. Press the Home button.
6. Repeat the above tasks while holding device A in the left hand and device B in the right hand.

5.10.3.3 Pass/Fail Criteria

The case does not cause substantial change in the feel of the device's Taptic Engine.

5.10.4 Home Button / Touch ID Sensor Overlays

This test procedure is applicable to all iPhone SE (3rd generation), iPhone SE (2nd generation), iPhone 8 Plus, iPhone 8, iPhone 7 Plus or iPhone 7 accessories that overlay the Home button or the Touch ID sensor.

Copyright © 2022 Apple Inc. All Rights Reserved.

5.10.4.1 Equipment

- Nitrile gloves (for example, Ansell TNT Blue)
- Ethyl alcohol hand sanitizer (for example, Purell)
- Scissors

5.10.4.2 Procedure

1. Cut off a square of material from the nitrile glove's wrist portion.
2. Install the accessory onto the device.
3. Press the sleep/wake or side button to place the device into a sleep state (display off).
4. Place the square of nitrile glove material over the device's Home button / Touch ID sensor with the glove's outer side facing away from the device.
5. Apply a small amount of hand sanitizer (approximately dime-sized) to the nitrile over the Home button / Touch ID sensor.
6. Repeat the following steps 10 times:
   a. Press the Home button / Touch ID sensor with a thumb.
   b. Verify that the device wakes (display on).
   c. Press the sleep/wake or side button to place the device into a sleep state (display off).
7. Repeat the following steps 10 times:
   a. Press the Home button / Touch ID sensor with an index finger.
   b. Verify that the device wakes (display on).
   c. Press the sleep/wake or side button to place the device into a sleep state (display off).

5.10.4.3 Pass/Fail Criteria

Verify the device wakes every time the Home button / Touch ID sensor is pressed.

5.10.5 Acoustics

The following test procedures apply to devices with a built in speaker and/or microphone.

5.10.5.1 Speakerphone Call

This procedure evaluates the impact of a case on the speakerphone performance of a device.

5.10.5.1.1 Equipment and Test Setup

This procedure needs two operators in separate quiet rooms.

Room A:

- Operator A
- The device (with cellular service) used to evaluate the case.

Copyright © 2022 Apple Inc. All Rights Reserved.

- The device should have at least two out of five bars of cellular reception within the room.

Room B:
- Operator B
- Landline speakerphone
- Digital audio recorder (for example, a device with the Voice Memo app)

5.10.5.1.2 Pass/Fail Criteria

There are two categories of failure for this procedure:
- Echo: If Operator B hears their own voice from the landline.
- Double Talk: If Operator B hears Operator A inconsistently.

The pass/fail threshold for these two categories should be established by performing the test procedure using:
- The device (without the case) as a reference.

There should be no perceivable difference between the reference and the test conducted with the case on the device.

5.10.5.1.3 Procedure

1. Operator A: Use the device (without a case) in Room A to call the landline phone in Room B.
2. Operator A: Place the device in speakerphone mode.
3. Operator B: Answer the call with the landline phone in Room B.
4. Operator B: Place the landline phone in speakerphone mode.
5. Operator A and B: Simultaneously recite the following phrases to evaluate the call quality:
   a. The birch canoe slid on the smooth planks.
   b. Glue the sheet to the dark blue background.
   c. It's easy to tell the depth of a well.
   d. These days a chicken leg is a rare dish.
   e. Rice is often served in round bowls.
   f. The juice of lemons makes fine punch.
   g. The box was thrown beside the parked truck.
   h. The hogs were fed chopped corn and garbage.
   i. Four hours of steady work faced us.
   j. Large size in stockings is hard to sell.
6. Operator B: Evaluate the call. Ensure that the call is clear when there is no case on the device.
7. Operator A: Place the case on the device.
8. Operator B: Start audio recording using a digital audio recorder.
9. Operator A: State the test date and identify the manufacturer name, product name, and a unique identifier (UID) for case (production run name, design version, etc.).

Copyright © 2022 Apple Inc. All Rights Reserved.

10. Operator A and B: Simultaneously recite the same phrases as above.
11. Operator B: Stop audio recording.
12. Operator B: Evaluate the recording against the Pass/Fail Criteria (page 55).

Note:
The phrases used for this test procedure are from "IEEE Recommended Practice for Speech Quality Measurements," in *IEEE Transactions on Audio and Electroacoustics*, vol. 17, no. 3, pp. 225-246, September 1969.

2022-07-08 | Copyright © 2022 Apple Inc. All Rights Reserved.

6. Covers

This chapter is applicable to accessories covering device displays.

6.1 Magnetic Interference

Accessory covers shall not interfere with the device's:

- Magnetic compass.
- Rear camera autofocus.
- Rear camera optical image stabilization (OIS), if present.

See Magnetic Interference (page 23) for additional details.

6.2 Smart Covers

Dimensional drawings indicating magnet and Hall effect sensor locations are available for the following devices:

- iPad Air (5th generation) and iPad Air (4th generation) 3 of 5 (page 242)
- iPad mini (6th generation) 3 of 6 (page 247)
- iPad mini (6th generation) 4 of 6 (page 248)
- iPad (9th generation), iPad (8th generation) and iPad (7th generation) 2 of 4 (page 252)
- iPad Pro (12.9-inch) 5th Generation 3 of 5 (page 257)
- iPad Pro (11-inch) 3rd Generation 3 of 5 (page 262)
- iPad Pro (12.9-inch) 4th Generation 3 of 5 (page 267)
- iPad Pro (11-inch) 2nd Generation 3 of 5 (page 272)
- iPad Air (3rd generation) with Wi-Fi 2 of 3 (page 276)
- iPad Air (3rd generation) with Wi-Fi + Cellular 2 of 3 (page 279)
- iPad mini (5th generation) with Wi-Fi 2 of 3 (page 282)
- iPad mini (5th generation) with Wi-Fi + Cellular 2 of 3 (page 285)
- iPad Pro (12.9-inch) 3rd Generation 2 of 3 (page 288)
- iPad Pro (11-inch) 2 of 3 (page 291)
- iPad Pro (12.9-inch) 2nd Generation Magnet/Hall Effect Sensors 1 of 2 (page 295)
- iPad Pro (12.9-inch) 2nd Generation Magnet/Hall Effect Sensors 2 of 2 (page 296)
- iPad Pro (10.5-inch) Magnet/Hall Effect Sensors 1 of 2 (page 299)

2022-07-08 | Copyright © 2022 Apple Inc. All Rights Reserved.

- iPad Pro (10.5-inch) Magnet/Hall Effect Sensors 2 of 2 (page 300)
- iPad (5th and 6th generation) Magnet/Hall Effect Sensors 1 of 2 (page 302)
- iPad (5th and 6th generation) Magnet/Hall Effect Sensors 2 of 2 (page 303)
- iPad Pro (9.7-inch) Magnet/Hall Effect Sensors 1 of 2 (page 306)
- iPad Pro (9.7-inch) Magnet/Hall Effect Sensors 2 of 2 (page 307)
- iPad Pro (12.9-inch) 1st Generation Magnet/Hall Effect Sensors 1 of 2 (page 310)
- iPad Pro (12.9-inch) 1st Generation Magnet/Hall Effect Sensors 2 of 2 (page 311)
- iPad mini 4 Magnet/Hall Effect Sensors (page 314)

2022-07-08 | Copyright © 2022 Apple Inc. All Rights Reserved.

7. Screen Overlays

The displays on Apple products have been carefully engineered and tested to deliver exacting visual performance. Many products also feature Multi-Touch technology to support user interactions. Any material overlaying the screen or between the surface and the user's fingers (or writing instrument on iPad) may impact either the visual or the touch interface performance.

7.1 Product Design

A screen overlay shall not:

- Degrade the performance of Multi-Touch or Apple Pencil.
- Introduce air gaps between the touchscreen and overlay.
- Be electrically conductive.

Screen overlay thickness should not exceed 0.3 mm.

To support Apple Pencil:

- Thickness should not exceed 0.095 mm.
- Relative permittivity (dielectric) should be 3.1 to 3.2.
- Surfaces that are not glossy may accelerate pencil tip wear.

7.1.1 Optical Transmission

Optical transmission of screen overlays should:

- Be greater than 90% relative to clear glass for any viewing angle across the active display area, see Device Dimensional Drawings (page 201).
- Remain flat as defined in Figure 7-1 (page 60). Upon normalizing the transmission spectrum to the value at 550 nm, the normalized spectrum should fall in the range of [0.99, 1.01] from 500-800 nm and [0.95, 1.01] from 400-500 nm.

2022-07-08 | Copyright © 2022 Apple Inc. All Rights Reserved.

Figure 7-1 Transmission Spectrum

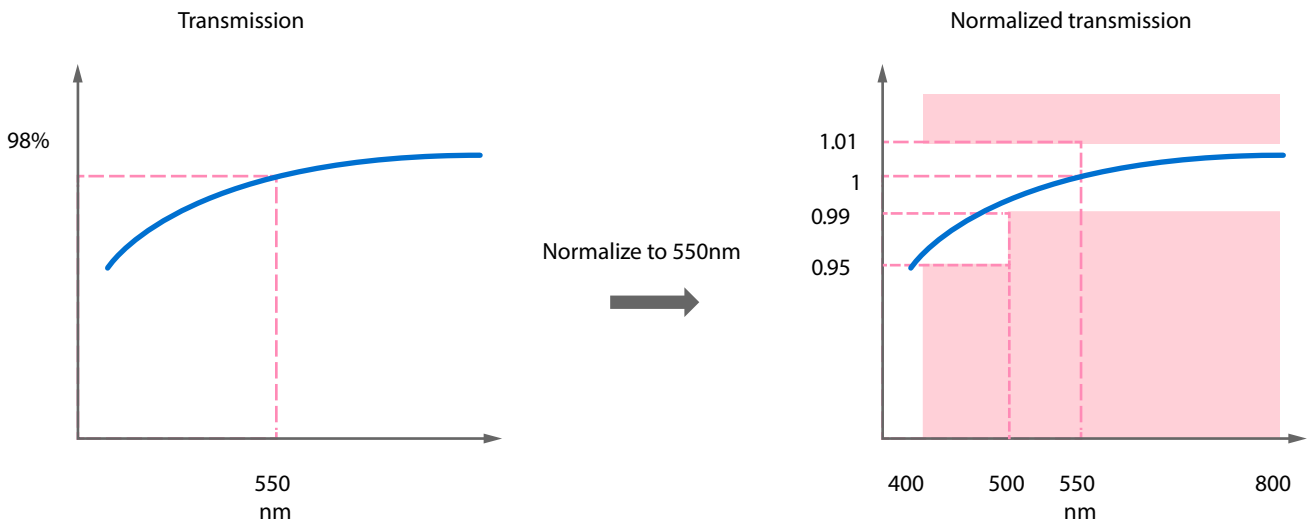

7.1.2 Transmission Haze

Transmission haze is the percentage of light scattered at more than 2.5° from the normal transmission.

Transmission haze should:

- Not exceed 13%.
- Be measured with a haze meter, per ASTM D1003.

7.2 Edge Swipe and Edge Press Gestures

See Edge Swipe Gestures (page 31) and Edge Press Gestures (page 31).

Copyright © 2022 Apple Inc. All Rights Reserved.

8. Camera Attachments

This chapter is applicable to accessories intentionally altering images captured by device cameras.

8.1 Magnetic Interference

Accessory camera attachments shall not interfere with the device's:

- Magnetic compass.
- Rear camera autofocus.
- Rear camera optical image stabilization (OIS), if present.

See Magnetic Interference (page 23) for additional details.

Copyright © 2022 Apple Inc. All Rights Reserved.

9. Adapters

An adapter accessory is a dongle or a Captured Cable (page 19) that enables connections between physically incompatible devices and accessories.

Unless otherwise specified, accessories may integrate one or more adapter components as well as other accessory features to create more advanced multi-port adapters. For example, a Lightning or USB-C adapter may support audio, power, external storage, media controls, app communication, and more.

See the Accessory Interface Specification (page 19) for more information.

9.1 Headset Adapters (Lightning to 3.5 mm)

Lightning to 3.5 mm headset adapters are accessories that enable 3.5 mm audio connections.

See the Accessory Interface Specification (page 19) for more information.

9.2 USB-A/USB-C to Lightning Headset Adapters

USB-A to Lightning or USB-C to Lightning headset adapters are accessories that integrate a Lightning Receptacle (C37) to support Lightning headsets, speakers, and microphones.

See the Accessory Interface Specification (page 19) for more information.

9.3 Ethernet Adapters (Lightning to RJ45)

A Lightning to Ethernet adapter is an accessory that enables a device to access a wired network. The Apple USB Ethernet Adapter is an example of a similar accessory for a Mac.

See the Accessory Interface Specification (page 19) for more information.

2022-07-08 | Copyright © 2022 Apple Inc. All Rights Reserved.

9.4 Lightning to USB Micro-B Adapters

Figure 9-1 Lightning to USB Micro-B Adapter

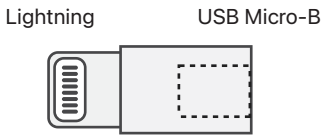

Lightning to USB Micro-B adapters are Lightning dongle accessories that function exactly like the Apple Lightning to USB Micro-B Adapter and shall consist of:

- Lightning connector.
- USB Micro-B receptacle.

See the Accessory Interface Specification (page 19) for more information.

2022-07-08 | Copyright © 2022 Apple Inc. All Rights Reserved.

10. AC Power Adapters

AC power adapters convert AC "mains" power to DC for the purpose of providing power to a device. They may provide power via one or more of the following:

- USB-C Receptacle (page 197) combined with a USB-C to Lightning cable.
- USB-A Receptacle (page 194) combined with a USB-A to Lightning cable.
- Device Power (Inductive) (page 113).

10.1 Converter Switching Frequencies

Device touchscreen or audio functionality may be degraded if converter switching frequencies do not meet the following requirements:

- Under loads greater than 5 mA, converter switching frequencies shall be above 22 kHz.
- Under loads greater than 20 mA, converter switching frequencies:
  - Shall be above 60 kHz.
  - Should be above 450 kHz.

10.2 YCAP AC Capacitor

AC power adapters should include a YCAP AC capacitor (up to 1000 pF) between the primary and secondary sections of the adapter's transformer to reduce common-mode noise at switching frequencies. These frequencies or their harmonics can interfere with device touchscreen sensors.

10.3 Impedance Stability

AC power adapter series impedance should not change abruptly. Sudden changes in impedance may cause touchscreen sensor output oscillations.

Bridge diodes used in full-wave bridge rectifiers can be a major source of abrupt changes in the series impedance. If the bridge diodes have large inherent reverse capacitance (greater than 100 pF), then the net impedance change due to diode switching may be acceptably small. However, diode reverse capacitance may decrease in more compact IC designs due to decreased chip area.

2022-07-08 | Copyright © 2022 Apple Inc. All Rights Reserved.

Impedance of bridge diodes with unacceptably low reverse capacitance can be stabilized using the example circuit shown in Figure 10-1 (page 65) and Table 10-1 (page 65). In this example, capacitors C1, C2, C3, and C4 have been placed in parallel with diodes D1, D2, D3, and D4 to stabilize the bridge impedance. Their values are larger than the inherent reverse capacitances of the diodes.

Resistors R1, R2, R3, and R4 are optional; if included, they can block noise at very high frequencies, which can help with EMI compatibility. The recommended values of R1, R2, R3, and R4 in Table 10-1 (page 65) were chosen to have trivial levels of impedance relative to the impedances of C1, C2, C3, and C4 at power line frequencies.

Figure 10-1 Typical AC power adapter diode bridge circuit

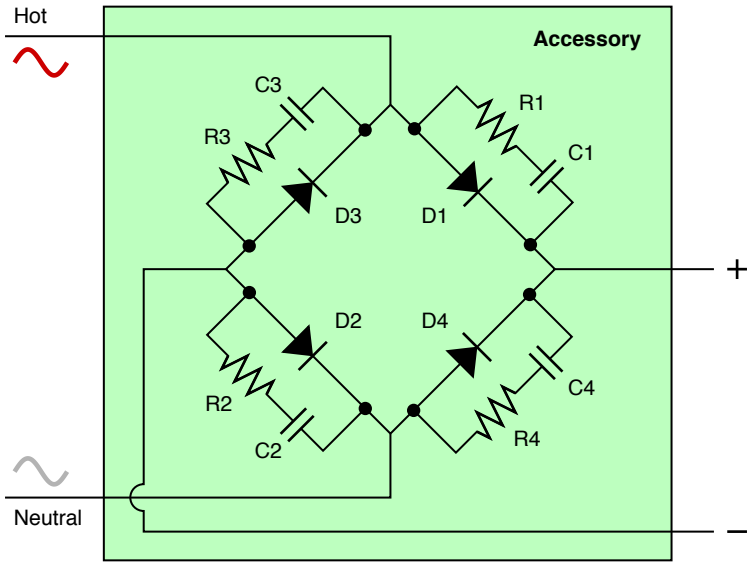

Table 10-1 Typical component values for an AC power adapter diode bridge circuit

Component	Value
C1, C2, C3, C4	47 pF
R1, R2, R3, R4	2 kΩ

10.4 Fuse Protection

A fuse should be present at the input of the AC power adapter to protect it under any fault condition.

Copyright © 2022 Apple Inc. All Rights Reserved.

10.5 Short Circuit Response

The output of the AC power adapter should drop or fold back without any resulting damage if its output is shorted to the secondary common (less than 10 mΩ).

2022-07-08 | Copyright © 2022 Apple Inc. All Rights Reserved.

11. Battery Packs

A battery pack is an accessory that is designed to provide power to the device from an internal power supply.

The battery pack may provide power via one or more of the following:

- A Qi transmitter, see Device Power (Inductive) (page 113).
- USB-C Receptacle (page 197) combined with a USB-C to Lightning cable.
- USB-A Receptacle (page 194) combined with a USB-A to Lightning cable.

2022-07-08 | Copyright © 2022 Apple Inc. All Rights Reserved.

12. Strobes

Strobe accessories replace a device's integrated flash when capturing a still image from either the front or rear-facing cameras. Photographers can use such accessories to control scene lighting for creative purposes.

Strobes are:

- Compatible with all iOS camera applications.
- Synchronized with the iPhone camera via the Lightning connector.

Figure 12-1 Example of integrated flash (top) vs. accessory strobe (bottom)

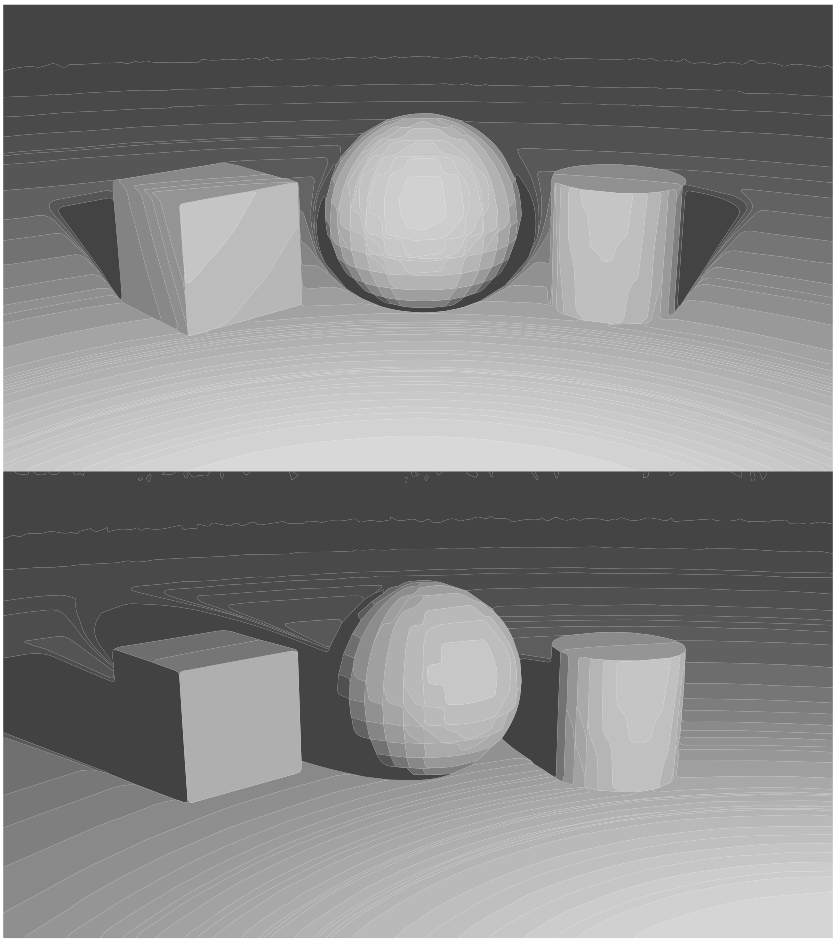

2022-07-08 | Copyright © 2022 Apple Inc. All Rights Reserved.

The following devices support strobe accessories:

- iPhone SE (3rd generation)
- iPhone 13 Pro Max
- iPhone 13 Pro
- iPhone 13
- iPhone 13 mini
- iPhone 12 Pro Max
- iPhone 12 Pro
- iPhone 12
- iPhone 12 mini
- iPhone SE (2nd generation)
- iPhone 11 Pro Max
- iPhone 11 Pro
- iPhone 11

This feature is supported on iOS 14.0 or later.

See the Accessory Interface Specification (page 19) for more information.

2022-07-08 | Copyright © 2022 Apple Inc. All Rights Reserved.

13. Keyboards

Devices may accept user input from accessory keyboards in place of the onscreen keyboard.

13.1 Requirements

Keyboards shall support the Human Interface Device (HID) (page 170) protocol and comply with all the requirements listed in Requirements (page 170).

> **Note:**
> Keyboards shall not identify themselves as Apple-branded accessories, for example, using the Apple Vendor ID and/or Product IDs.

Keyboard keys exhibiting any of the following behaviors are explicitly prohibited:

- Send anything other than 'key pressed' or 'key released' for key(s) physically pressed/released.
- Emulate combinations or sequences of keys (for example, a Copy button sending ⌘-C or macros generating a timed sequence of events).
- Emulate timed user actions, such as 'press-and-hold'.
- Send different HID usages depending on the state of another control surface.

All HID usages sent from the keyboard shall occur in response to a Direct User Action (page 19).

Keyboards may integrate LEDs to indicate the:

- Caps Lock status of the device.
- Connection status, such as Bluetooth state.
- Battery status of the accessory, if applicable.

Keyboards shall not incorporate any other status LEDs not supported by devices.

Keyboards should be integrated with Trackpads (page 76) when possible to provide an enhanced user experience.

Mechanical key layout shall be based on the ISO/IEC 9995-2, ANSI-INCITS 154-1988, or JIS X 6002-1980 standards.

Keyboard HID descriptors shall set the *bCountryCode* field to the appropriate country code as defined in *Device Class Definition for Human Interface Devices (HID) Version 1.11, section 6.2.1 HID Descriptor*.

Copyright © 2022 Apple Inc. All Rights Reserved.

Keyboard HID descriptors shall declare support for the HID Keyboard/Keypad Page. HID report descriptors may declare a input usage minimum of 0 and maximum of 255 as shown in Example HID Report Descriptor (page 74) for efficiency. Otherwise, the descriptor shall individually enumerate each HID Keyboard/Keypad page usage the keyboard is capable of sending.

Keyboards shall implement individual keys emitting the following HID Keyboard/Keypad page usages:

Table 13-1 Required HID Keyboard/Keypad Page (`0x07`) controls for use by keyboards

Usage ID	Usage Name	Apple Function
`0x0004`	a and A	a and A
`0x0005`	b and B	b and B
`0x0006`	c and C	c and C
`0x0007`	d and D	d and D
`0x0008`	e and E	e and E
`0x0009`	f and F	f and F
`0x000A`	g and G	g and G
`0x000B`	h and H	h and H
`0x000C`	i and I	i and I
`0x000D`	j and J	j and J
`0x000E`	k and K	k and K
`0x000F`	l and L	l and L
`0x0010`	m and M	m and M
`0x0011`	n and N	n and N
`0x0012`	o and O	o and O
`0x0013`	p and P	p and P
`0x0014`	q and Q	q and Q
`0x0015`	r and R	r and R
`0x0016`	s and S	s and S
`0x0017`	t and T	t and T
`0x0018`	u and U	u and U
`0x0019`	v and V	v and V
`0x001A`	w and W	w and W
`0x001B`	x and X	x and X
`0x001C`	y and Y	y and Y
`0x001D`	z and Z	z and Z
`0x001E`	1 and !	1 and !
`0x001F`	2 and @	2 and @
`0x0020`	3 and #	3 and #
`0x0021`	4 and $	4 and $

2022-07-08 | Copyright © 2022 Apple Inc. All Rights Reserved.

Usage ID	Usage Name	Apple Function
0x0022	5 and %	5 and %
0x0023	6 and ^	6 and ^
0x0024	7 and &	7 and &
0x0025	8 and *	8 and *
0x0026	9 and (	9 and (
0x0027	0 and)	0 and)
0x0028	Return/Enter	Return
0x002A	Delete/Backspace	Delete
0x002B	Tab	Tab
0x002C	Spacebar	Spacebar
0x002D	- and _	- and _
0x002E	= and +	= and +
0x002F	[and {	[and {
0x0030	] and }	] and }
0x0031	\ and |	\ and |
0x0033	; and :	; and :
0x0034	' and "	' and "
0x0035	Grave Accent and Tilde	` and ~
0x0036	, and <	, and <
0x0037	. and >	. and >
0x0038	/ and ?	/ and ?
0x0039	CapsLock	Caps Lock
0x004F	RightArrow	Right Arrow
0x0050	LeftArrow	Left Arrow
0x0051	DownArrow	Down Arrow
0x0052	UpArrow	Up Arrow
0x00E1	LeftShift	Left Shift
0x00E2	LeftAlt	Left Option / Alt
0x00E3	LeftGUI	Left Command / ⌘
0x00E5	RightShift	Right Shift
0x00E6	RightAlt	Right Option / Alt
0x00E7	RightGUI	Right Command / ⌘

Keyboards may implement individual keys emitting the following HID Keyboard/Keypad page usages:

Table 13-2 Optional HID Keyboard/Keypad Page (0x07) controls for use by keyboards

Usage ID	Usage Name	Apple Function
0x0029	Escape	Escape

2022-07-08 | Copyright © 2022 Apple Inc. All Rights Reserved.

Usage ID	Usage Name	Apple Function
0x00E0	LeftControl	Left Control
0x00E4	RightControl	Right Control
0x004A	Home	Home
0x004D	End	End
0x0054	Keypad /	Keypad /
0x0055	Keypad *	Keypad *
0x0056	Keypad -	Keypad -
0x0057	Keypad +	Keypad +
0x0058	Keypad Enter	Keypad Enter
0x0059	Keypad 1 and End	Keypad 1
0x005A	Keypad 2 and Down Arrow	Keypad 2
0x005B	Keypad 3 and PageDn	Keypad 3
0x005C	Keypad 4 and Left Arrow	Keypad 4
0x005D	Keypad 5	Keypad 5
0x005E	Keypad 6 and Right Arrow	Keypad 6
0x005F	Keypad 7 and Home	Keypad 7
0x0060	Keypad 8 and Up Arrow	Keypad 8
0x0061	Keypad 9 and PageUp	Keypad 9
0x0062	Keypad 0 and Insert	Keypad 0
0x0063	Keypad . and Delete	Keypad .
0x0067	Keypad =	Keypad =

Keyboards may implement individual keys emitting the following HID Consumer page usages:

Table 13-3 HID Consumer Page (0x0C) controls for use by keyboards

Usage ID	Usage Name	Apple Function
0x0030	Power	Lock
0x0040	Menu	Home Button
0x006F	Display Brightness Increment	Brighter
0x0070	Display Brightness Decrement	Dimmer
0x00B5	Scan Next Track	Transport Right
0x00B6	Scan Previous Track	Transport Left
0x00CD	Play/Pause	Play/Pause
0x00E2	Mute	Mute
0x00E9	Volume Increment	Louder
0x00EA	Volume Decrement	Softer
0x01AE	AL Keyboard Layout	Toggle Onscreen Keyboard
0x029D	AC Keyboard Layout Select	Globe Key

2022-07-08 | Copyright © 2022 Apple Inc. All Rights Reserved.

Usage ID	Usage Name	Apple Function
0x0221	AC Search	Spotlight
0x025B	Promote	Play More Like This
0x025C	Demote	Play Less Like This
0x0262	Add to Cart	Add to Wish List

JIS keyboards shall also implement additional keys found on the Japanese Apple Wireless Keyboard. Non-JIS keyboards shall not implement the Japanese keys.

Table 13-4 Required HID Keyboard/Keypad Page (0x07) controls for use by JIS keyboards

Usage ID	Usage Name	Apple Function
0x0087	Keyboard International1	_
0x0089	Keyboard International3	¥
0x0090	LANG1	Switch to Previous Language
0x0091	LANG2	Switch to Next Language

13.2 Examples

13.2.1 Example HID Report Descriptor

```
USAGE PAGE (Generic Desktop)              05 01
USAGE (Keyboard)                          09 06
COLLECTION (Application)                  A1 01
  USAGE PAGE (LEDs)                       05 08
  LOGICAL MINIMUM (0)                     15 00
  LOGICAL MAXIMUM (1)                     25 01
  USAGE (Caps Lock)                       09 02
  REPORT SIZE (1)                         75 01
  REPORT COUNT (1)                        95 01
  OUTPUT (Data,Var,Abs)                   91 02
  REPORT SIZE (7)                         75 07
  REPORT COUNT (1)                        95 01
  OUTPUT (Cnst,Var,Abs)                   91 03
  USAGE PAGE (Keyboard)                   05 07
  USAGE MINIMUM (Keyboard Left Control)   19 E0
  USAGE MAXIMUM (Keyboard Right GUI)      29 E7
  REPORT SIZE (1)                         75 01
  REPORT COUNT (8)                        95 08
  INPUT (Data,Var,Abs)                    81 02
  LOGICAL MINIMUM (0)                     15 00
  LOGICAL MAXIMUM (255)                   26 FF 00
  USAGE MINIMUM (0)                       19 00
  USAGE MAXIMUM (255)                     2A FF 00
```

Copyright © 2022 Apple Inc. All Rights Reserved.

```
  REPORT SIZE (8)                        75 08
  REPORT COUNT (5)                       95 05
  INPUT (Data,Ary,Abs)                   81 00
  USAGE PAGE (Consumer Devices)          05 0C
  LOGICAL MINIMUM (0)                    15 00
  LOGICAL MAXIMUM (1)                    25 01
  USAGE (Menu)                           09 40
  USAGE (AC Search)                      0A 21 02
  USAGE (AL Keyboard Layout)             0A AE 01
  USAGE (Scan Previous Track)            09 B6
  USAGE (Play/Pause)                     09 CD
  USAGE (Scan Next Track)                09 B5
  USAGE (Mute)                           09 E2
  USAGE (Volume Down)                    09 EA
  USAGE (Volume Up)                      09 E9
  USAGE (Power)                          09 30
  REPORT SIZE (1)                        75 01
  REPORT COUNT (10)                      95 0A
  INPUT (Data,Var,Abs)                   81 02
  REPORT SIZE (6)                        75 06
  REPORT COUNT (1)                       95 01
  INPUT (Cnst,Var,Abs)                   81 03
END COLLECTION                           C0
```

2022-07-08 | Copyright © 2022 Apple Inc. All Rights Reserved.

14. Trackpads

Devices may accept user input from accessory trackpads.

This feature is supported on iPadOS 14.5 or later.

14.1 Requirements

Accessory trackpads shall support the Human Interface Device (HID) (page 170) protocol and comply with all the requirements listed in Requirements (page 170).

> **Note:**
> Accessory trackpads shall not identify themselves as Apple-branded accessories, for example, using the Apple Vendor ID and/or Product IDs.

Accessory trackpads exhibiting any of the following behaviors are explicitly prohibited:

- Emulate combinations of touch gestures.
- Emulate timed user actions, such as 'click and hold', drag, and zoom gestures.
- Send different HID usages depending on the state of another control surface.

All HID reports sent from the accessory trackpad shall occur in response to a Direct User Action (page 19).

Trackpads shall support 2-5 simultaneous contacts on the digitizer surface.

14.1.1 Integration with Keyboards

Accessory trackpads shall be integrated with Keyboards (page 70) and simultaneously support both input methods. The following are examples of interactions involving both keyboard and trackpad input:

- Rapidly transitioning between cursor movement and keyboard entry.
- Pressing and holding modifier keys while performing a drag.
- Pressing ⌘-Tab to see the app switcher, then using the cursor to switch apps.
- Dragging an item using the trackpad, followed by pressing ⌘-Tab to switch apps.

2022-07-08 | Copyright © 2022 Apple Inc. All Rights Reserved.

14.1.2 HID Report Descriptor

HID report descriptors for an accessory trackpad shall declare support for the HID Digitizer Page.

Accessory trackpads shall implement the following HID Digitizer page usages:

Table 14-1 Required HID Digitizer Page (`0x0D`) controls for use by accessory trackpads

Usage ID	Usage Name	Apple Function
`0x01`	Button 1	Primary button state
`0x05`	Report ID	Feature Report ID
`0x22`	Finger	Number of contact collection points
`0x30`	X	X coordinate of contact position
`0x31`	Y	Y coordinate of contact position
`0x38` or `0x51`	Transducer Index or Contact ID	Index (from 0-4) that uniquely identifies the finger/contact
`0x42`	Tip Switch	Contact is on the surface of the digitizer
`0x47`	Confidence	Touch is an intended, valid contact
`0x57`	Surface Switch	Digitizer surface on/off

Accessory trackpads may implement the following HID Digitizer page usages. These HID usages are recommended:

Table 14-2 Recommended HID Digitizer Page (`0x0D`) controls for use by accessory trackpads

Usage ID	Usage Name	Apple Function
`0x02`	Button 2	Secondary button state
`0x56`	Scan Time	Relative scan time
`0xA1`	Report Rate	Report rate (Hz)

14.1.3 Coexistence

Accessory trackpads shall:

- Not degrade the performance of Multi-Touch or Apple Pencil.
- Not support a drive voltage greater than 6 V_{pp}.
- Not support drive frequencies less than 500 kHz.
- Support 3 or more drive frequencies, separated by at least 50 kHz each.
- Dynamically switch between drive frequencies whenever effective resolution drops below 120 DPI. For example, effective resolution may drop in the presence of 50 mV RMS noise from external power sources.

Accessory trackpads should support a sine wave narrow band drive frequency.

2022-07-08 | Copyright © 2022 Apple Inc. All Rights Reserved.

14.1.4 Performance

Accessory trackpads shall:

- Behave uniformly across the digitizer surface.
- Uniquely detect contact points as close as 8 mm center to center.
- Detect contact sizes of at least 5 mm.
- Differentiate between multi-finger taps and single-finger drags.
- Maintain an effective input resolution less than 20 µm and immediately report positional updates that are greater than or equal to the effective input resolution.
- Maintain an effective resolution more than 600 DPI.
- Maintain the highest possible report rate to the device. Apple recommends 60 Hz or higher.
- Maintain a panning latency less than or equal to 23 ms.
- Maintain a touch down latency less than or equal to 35 ms.
- Maintain a positional accuracy less than or equal to 500 µm.
- Maintain a stationary contact jitter less than or equal to 210 µm.
- Not deviate more than 250 µm from an ideal line.

14.1.5 Input Confidence

Accessory trackpads shall:

- Set the Confidence usage when an input transitions from valid to invalid. Contact transitions should be quick, accurate, and stable to achieve the best user experience. Incorrect or fluctuating classification of contacts may result in recognition of unintended gestures, interruption, or cancelation of intended gestures.
- Detect and reject unintended/invalid inputs, such as palms, while continuing to report valid inputs to the device, such as multiple contacts.
- Distinguish between a valid large thumb and an invalid lightly resting palm.
- Reject inputs that are ≥1 mm from the tracking surface.

14.1.6 Click to Wake

Devices use Report ID usage to indicate to the trackpad whether surface contacts shall be reported or not. Devices will use the Surface Switch usage to tell the accessory to go into Click to Wake mode where only button clicks are accepted. Trackpads may use this opportunity to go into a low power mode where the digitizer surface does not have to be constantly scanned.

This feature report also doubles as an informational report. Devices may query the accessory trackpad at any time after enumeration to obtain the current state of the Surface Switch, and also to get the accessory's Report Rate.

2022-07-08 | Copyright © 2022 Apple Inc. All Rights Reserved.

14.2 Examples

14.2.1 Example HID Report Descriptor

The following descriptor is for a 92.10 mm x 50.60 mm trackpad with two buttons supporting up to five simultaneous contacts.

Additional modifications may be necessary in order to implement this HID report descriptor in the accessory trackpad firmware, specifically:

- Modify physical maximum values for X (`0x30`) and Y (`0x31`) positions of each finger to match the physical size of the accessory trackpad. Units are in tenths of a mm (0.1 mm). In the example, X goes from `0x0` to `0x0399` (92.10 mm) and Y goes from `0x0` to `0x01FA` (50.60 mm).
- Modify logical maximum values for the X (`0x30`) and Y (`0x31`) of each finger positions to match the resolution of the accessory trackpad. In the example, X (`0x30`) goes from 0 to `0x0451` (for a resolution of 92.10/1105 = ~0.083 mm) and Y (`0x31`) goes from 0 to `0x025F` (for the same resolution of 50.60/607 = ~0.083 mm).

```
USAGE PAGE (Digitizer Device Page)                  05 0D
USAGE (Touch Pad)                                   09 05
COLLECTION (Application)                            A1 01
  REPORT_ID (3)                                     85 03
  LOGICAL MAXIMUM (65535)                           27 FF FF 00 00
  USAGE (Relative Scan Time (DV=Dynamic Value))     09 56
  REPORT SIZE (16)                                  75 10
  REPORT COUNT (1)                                  95 01
  INPUT (Data,Var,Abs)                              81 02
  LOGICAL MAXIMUM (1)                               25 01
  REPORT SIZE (1)                                   75 01
  USAGE (Surface Switch)                            09 57
  FEATURE (Data,Var,Abs)                            B1 02
  LOGICAL MAXIMUM (32767)                           26 FF 7F
  REPORT SIZE (15)                                  75 0F
  USAGE (Report Rate)                               09 A1
  FEATURE (Data,Var,Abs)                            B1 02
  USAGE PAGE (Button Page)                          05 09
  LOGICAL MAXIMUM (1)                               25 01
  USAGE MINIMUM (Button 1)                          19 01
  USAGE MAXIMUM (Button 2)                          29 02
  REPORT COUNT (2)                                  95 02
  REPORT SIZE (1)                                   75 01
  INPUT (Data,Var,Abs)                              81 02
  REPORT COUNT (6)                                  95 06
  INPUT (Cost, Ary, Abs)                            81 01
  USAGE PAGE (Digitizer Device Page)                05 0D
  USAGE (Finger)                                    09 22
  COLLECTION (Physical)                             A1 00
  USAGE (Tip Switch)                                09 42
  USAGE (Confidence)                                09 47
```

2022-07-08 | Copyright © 2022 Apple Inc. All Rights Reserved.

```
REPORT COUNT (2)                                95 02
INPUT (Data,Var,Abs)                            81 02
LOGICAL MAXIMUM (5)                             25 05
USAGE (Transducer Index)                        09 38
REPORT SIZE (6)                                 75 06
REPORT COUNT (1)                                95 01
INPUT (Data,Var,Abs)                            81 02
USAGE PAGE (Generic Desktop Page)               05 01
PHYSICAL MAXIMUM (921)                          46 99 03
PHYSICAL MINIMUM (0)                            35 00
LOGICAL MAXIMUM (1105)                          26 51 04
REPORT SIZE (12)                                75 0C
UNIT EXPONENT (Unit Value x .01)                55 0E
GLOBAL UNIT (Distance in centimeters)           65 11
USAGE (X)                                       09 30
INPUT (Data,Var,Abs)                            81 02
PHYSICAL MAXIMUM (506)                          46 FA 01
LOGICAL MAXIMUM (607)                           26 5F 02
USAGE (Y)                                       09 31
INPUT (Data,Var,Abs)                            81 02
END COLLECTION (Physical)                       C0
USAGE PAGE (Digitizer Device Page)              05 0D
USAGE (Finger)                                  09 22
COLLECTION (PHYSICAL)                           A1 00
LOGICAL MAXIMUM (1)                             25 01
USAGE (Tip Switch)                              09 42
USAGE (Confidence)                              09 47
REPORT SIZE (1)                                 75 01
REPORT COUNT (2)                                95 02
INPUT (Data,Var,Abs)                            81 02
USAGE (Transducer Index)                        09 38
LOGICAL MAXIMUM (5)                             25 05
REPORT SIZE (6)                                 75 06
REPORT COUNT (1)                                95 01
INPUT (Data,Var,Abs)                            81 02
USAGE PAGE (Generic Desktop Page)               05 01
PHYSICAL MAXIMUM (921)                          46 99 03
LOGICAL MAXIMUM (1105)                          26 51 04
REPORT SIZE (12)                                75 0C
USAGE (X)                                       09 30
INPUT (Data,Var,Abs)                            81 02
PHYSICAL MAXIMUM (506)                          46 FA 01
LOGICAL MAXIMUM (607)                           26 5F 02
USAGE (Y)                                       09 31
INPUT (Data,Var,Abs)                            81 02
END COLLECTION (Physical)                       C0
USAGE PAGE (Digitizer Device Page)              05 0D
USAGE (Finger)                                  09 22
COLLECTION (Physical)                           A1 00
LOGICAL MAXIMUM (1)                             25 01
USAGE (Tip Switch)                              09 42
USAGE (Confidence)                              09 47
REPORT SIZE (1)                                 75 01
```

Copyright © 2022 Apple Inc. All Rights Reserved.

```
REPORT COUNT (2)                                95 02
INPUT (Data,Var,Abs)                            81 02
USAGE (Transducer Index)                        09 38
LOGICAL MAXIMUM (5)                             25 05
REPORT SIZE (6)                                 75 06
REPORT COUNT (1)                                95 01
INPUT (Data,Var,Abs)                            81 02
USAGE PAGE (Generic Desktop Page)               05 01
PHYSICAL MAXIMUM (921)                          46 99 03
LOGICAL MAXIMUM (1105)                          26 51 04
REPORT SIZE (12)                                75 0C
USAGE (X)                                       09 30
INPUT (Data,Var,Abs)                            81 02
PHYSICAL MAXIMUM (506)                          46 FA 01
LOGICAL MAXIMUM (607)                           26 5F 02
USAGE (Y)                                       09 31
INPUT (Data,Var,Abs)                            81 02
END COLLECTION (PHYSICAL)                       C0
USAGE PAGE (Digitizer Device Page)              05 0D
USAGE (Finger)                                  09 22
COLLECTION (PHYSICAL)                           A1 00
LOGICAL MAXIMUM (1)                             25 01
USAGE (Tip Switch)                              09 42
USAGE (Confidence)                              09 47
REPORT SIZE (1)                                 75 01
REPORT COUNT (2)                                95 02
INPUT (Data,Var,Abs)                            81 02
USAGE (Transducer Index)                        09 38
LOGICAL MAXIMUM (5)                             25 05
REPORT SIZE (6)                                 75 06
REPORT COUNT (1)                                95 01
INPUT (Data,Var,Abs)                            81 02
USAGE PAGE (Generic Desktop Page)               05 01
PHYSICAL MAXIMUM (921)                          46 99 03
LOGICAL MAXIMUM (1105)                          26 51 04
REPORT SIZE (12)                                75 0C
USAGE (X)                                       09 30
INPUT (Data,Var,Abs)                            81 02
PHYSICAL MAXIMUM (506)                          46 FA 01
LOGICAL MAXIMUM (607)                           26 5F 02
USAGE (Y)                                       09 31
INPUT (Data,Var,Abs)                            81 02
END COLLECTION (Physical)                       C0
USAGE PAGE (Digitizer Device Page)              05 0D
USAGE (Finger)                                  09 22
COLLECTION (PHYSICAL)                           A1 00
LOGICAL MAXIMUM (1)                             25 01
USAGE (Tip Switch)                              09 42
USAGE (Confidence)                              09 47
REPORT SIZE (1)                                 75 01
REPORT COUNT (2)                                95 02
INPUT (Data,Var,Abs)                            81 02
USAGE (Transducer Index)                        09 38
```

Copyright © 2022 Apple Inc. All Rights Reserved.

```
  LOGICAL MAXIMUM (5)                                25 05
  REPORT SIZE (6)                                    75 06
  REPORT COUNT (1)                                   95 01
  INPUT (Data,Var,Abs)                               81 02
  USAGE PAGE (Generic Desktop Page)                  05 01
  PHYSICAL MAXIMUM (921)                             46 99 03
  LOGICAL MAXIMUM (1105)                             26 51 04
  REPORT SIZE (12)                                   75 0C
  USAGE (X)                                          09 30
  INPUT (Data,Var,Abs)                               81 02
  PHYSICAL MAXIMUM (506)                             46 FA 01
  LOGICAL MAXIMUM (607)                              26 5F 02
  USAGE (Y)                                          09 31
  INPUT (Data,Var,Abs)                               81 02
  END COLLECTION (Physical)                          C0
END COLLECTION (Application)                         C0
```

14.2.2 Example Trackpad

The following HID reports are for a 60 Hz accessory trackpad using the Example HID Report Descriptor (page 79):

1. Two contacts are made on the surface of the accessory trackpad.
   `03000000 0300100F 0700C016 00000000 00000000 00000000`

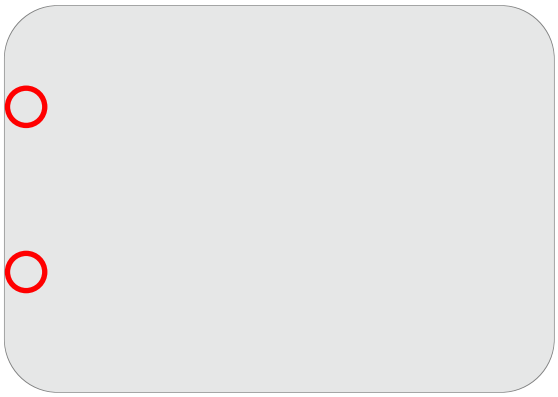

2. Two contacts move simultaneously along the X axis.
   `03A70000 0314110F 0714C116 00000000 00000000 00000000`

Copyright © 2022 Apple Inc. All Rights Reserved.

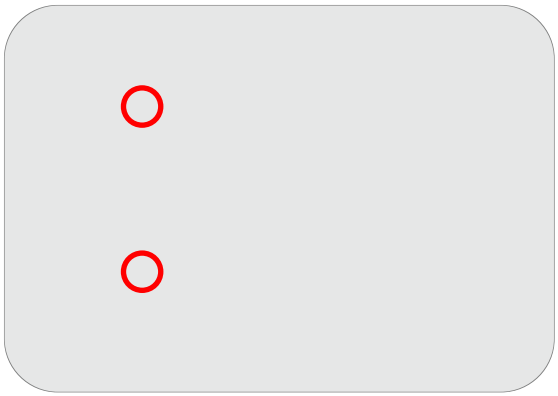

3. Two contacts continue moving until they reach the center of the digitizer surface.
   `034E0100 0328120F 0728C216 00000000 00000000 00000000`

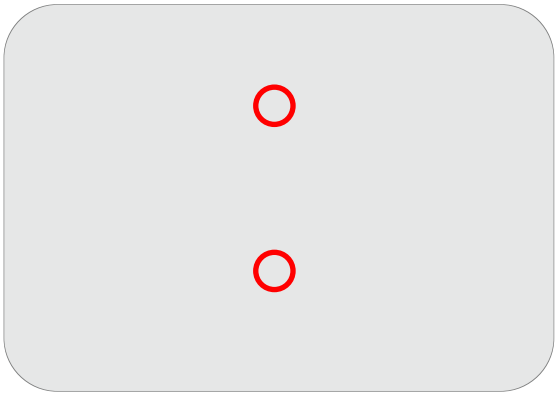

4. One contact is removed. Confidence for removed contact is still 1 and its coordinates are unchanged.
   `03F50100 0328120F 0628C216 00000000 00000000 00000000`

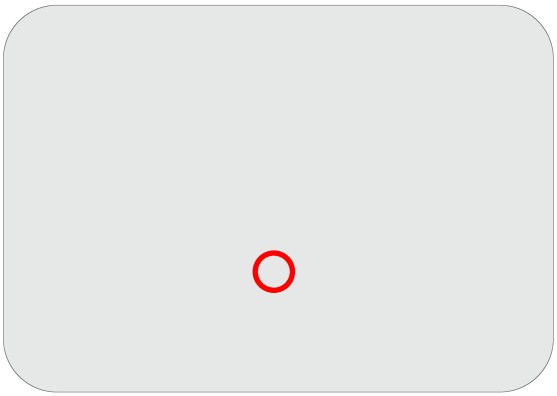

5. Remaining contact moves to the exact center of the digitizer surface. Confidence and coordinates of the removed contact are now 0.
   `039C0200 0328F212 00000000 00000000 00000000 00000000`

2022-07-08 | Copyright © 2022 Apple Inc. All Rights Reserved.

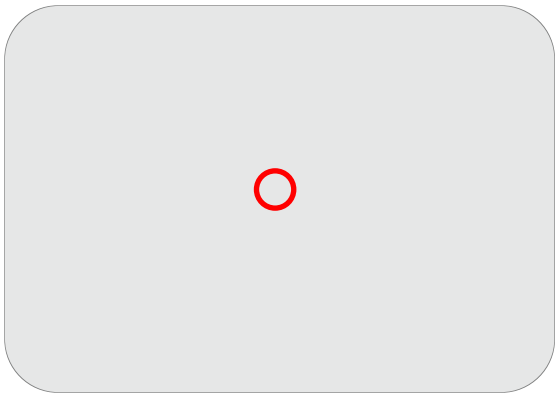

6. Button 1 is clicked.
   `03430301 0328F212 00000000 00000000 000000000 0000000`

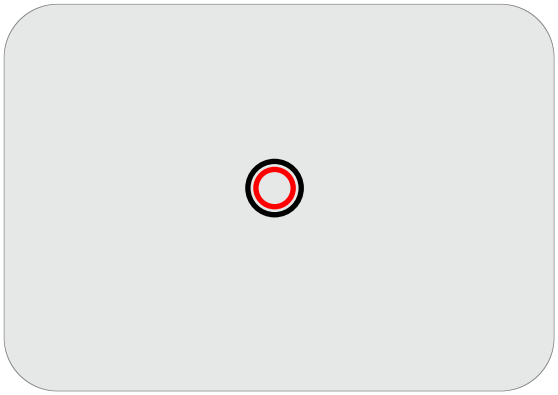

7. Button 1 is un-clicked and contact is removed. Confidence for removed contact is still 1 and its coordinates are unchanged.
   `03EA0300 0228F212 00000000 00000000 00000000 00000000`

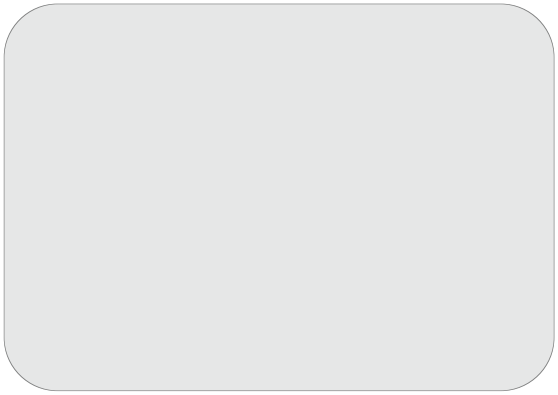

Copyright © 2022 Apple Inc. All Rights Reserved.

15. AirPods Accessories

Accessories shall not interfere with AirPods operation.

Relevant keep-out regions can be found in the device dimensional drawings, see:

- AirPods (3rd generation) (page 352).
- AirPods Pro (page 353).
- AirPods (1st generation) and AirPods (2nd generation) (page 354).

15.1 Charging Case Covers

Charging case covers shall not interfere with AirPods charging case operation.

Relevant keep-out regions can be found in the device dimensional drawings, see:

- AirPods (3rd generation) MagSafe Charging Case (page 349).
- AirPods Pro Wireless Charging Case (page 350).
- AirPods Wireless Charging Case (page 351).

Charging case covers should have a uniform maximum thickness of 1.0 mm across the metal keep-out region to avoid impacting wireless charging performance.

15.2 Chargers

Charging accessories with integrated:

- Lightning connectors shall be physically compatible with all charging cases and meet the requirements for iPhone/iPod in Device Power (Lightning) (page 108).
- Qi transmitters shall be physically compatible with all charging cases and meet the requirements in Device Power (Inductive) (page 113).

Copyright © 2022 Apple Inc. All Rights Reserved.

16. Watch Bands

A well-designed watch band will securely attach to Apple Watch without interfering with Apple Watch operation. See Device Dimensional Drawings (page 201) for Apple Watch dimensional drawings with defined keep-out zones.

16.1 Requirements

Watch bands for Apple Watch shall integrate two lugs to mate with the Apple Watch Band Interface (page 88). Apple Watch uses a high precision interface profile, see https://developer.apple.com/accessories/apple-watch-lug-profile.zip for a sample 2D lug profile. Lugs should lock into the watch band mating slot with a 'lug latch' feature to prevent accidental removal of the watch band.

Exposed edges of watch bands and lugs shall pass UL 1439 tests for sharpness of edges on equipment and BS EN 71-1:2014, *Safety of Toys - Mechanical and physical properties*.

The lug latch shall never become jammed in the extended position.

Watch bands shall not integrate magnetic chargers.

Watch bands and lugs should:

- Pass a 72 hour salt mist test as specified in ASTM B117 with no visible corrosion.
- Resist a 5-20 kgf lateral slide-out force when installed in Apple Watch.
- Resist a 20 kgf or greater pull force as specified in ISO-6245:1996, *Specifications for Diver's Watches*, section 7.3.
- Detach easily from Apple Watch when the watch band release buttons are pressed.
- Take into account the weight of Apple Watch.

Watch bands shall not prevent the user's skin from maintaining direct contact with the Apple Watch heart sensors and the back of Apple Watch, and shall incorporate sufficient margin to compensate for shifting or dimensional changes of the watch band material. Failure to do so may interfere with Apple Watch wrist detect and Apple Pay features. Watch bands should:

- Have length sizing adjustment pitch of less than 7 mm (center to center).
- Provide sufficient adjustability for the user to achieve a snug, yet comfortable fit preventing movement of Apple Watch relative to the wearer's skin.

Copyright © 2022 Apple Inc. All Rights Reserved.

Watch bands intended for use during exercise should maintain a snug fit through a full range of motion to maintain compatibility with Apple Watch heart sensors.

Apple recommends the following materials for lug bodies:
- 75 Shore A silicone.
- 50-55% glass-filled nylon.
- 240-270HV 316L / EN 1.4435 stainless steel.

Apple recommends the following materials for lug latches:
- 50-55% glass-filled nylon.
- 240-270HV 316L / EN 1.4435 stainless steel.

Watch bands for Apple Watch shall comply with applicable environmental regulations for the regions in which the watch bands are to be sold, and any applicable substance or material restrictions, including applicable restrictions on:
- Organic tin compounds, PFOS, PFOA, phthalates, azo dyes, polybrominated biphenyls (PBBs) and PAHs, per requirements of the EU REACh regulation EC 1907/2006.
- Nickel leach rate on surfaces in prolonged skin contact, per requirements of the EU REACh regulation EC 1907/2006.
- Cadmium, lead, hexavalent chromium, and nickel, per requirements of EU Directive 2009/48/EC.
- Natural rubber latex, per requirements of EU Directive EC 93/42/EEC.
- Dimethylfumarate (DMFu), per requirements of EU Regulation 412/2012.
- pH and Formaldehyde, per requirements of China GB 18401 for textiles and China GB 20400 for leather.
- Endangered species of flora and fauna in products or packaging (US Lacey Act).
- Polybrominated diphenyl ethers (PBDE).

2022-07-08 | Copyright © 2022 Apple Inc. All Rights Reserved.

16.2 Apple Watch Band Interface

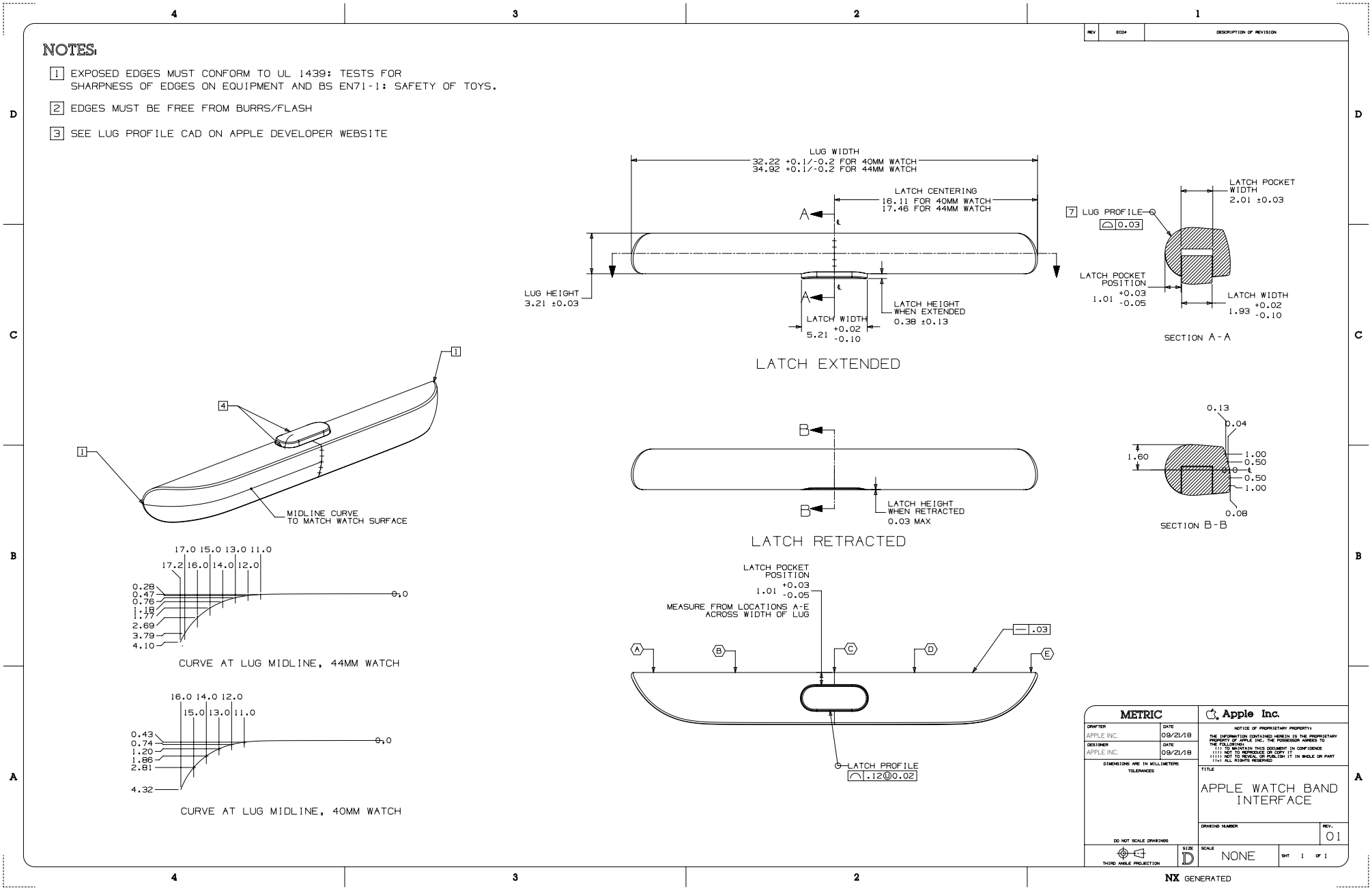

16.3 Example Apple Watch Lug Assembly

Assembly instructions are based on Example Apple Watch Lug (page 91) and an assembly fixture with a clamping mechanism.

Proper assembly of the lug is critical to ensure the watch band securely attaches to the Apple Watch. Improper assembly may result in damage to the Apple Watch and/or the watch band.

Screw threads should be secured with Loctite 435. Screws that have been previously installed/used should not be reused.

The assembly fixture should hold the lug assembly in place and a clamping mechanism should compress the lug during screw insertion.

Assemble the watch band and lug as follows, see Figure 16-1 (page 90).

1. Lightly insert the long end of the female pin in the watch band until hard stop. Ensure there is no warping or damage in the watch band.
2. Lightly insert the long end of the male pin in the other side of the band until it interlocks with the female pin and both pins are seated together. Ensure there is no warping or damage in the watch band.
3. Align the holes on the bottom of the lug with the exposed ends of the female and male pins. Note lug latch top/bottom orientation relative to the watch band. Latch shall be on the side of the watch band against the wrist.
4. Apply Loctite 435 to screw threads.
5. Install both screws using the following specification:
   - Torque: 1.1 kgf-cm ±10%
   - RPM: 120 ±10%
6. Visually inspect at 1200-1400 lux for screw proudness and cross-threading.
7. Ensure screws are just sub-flush to the lowest part of the counterbore and appear parallel to the long axis of the lug.
8. Ensure screws are undamaged, flat, and concentric with the counterbore.

2022-07-08 | Copyright © 2022 Apple Inc. All Rights Reserved.

Figure 16-1 Apple Watch Lug Assembly Fixture

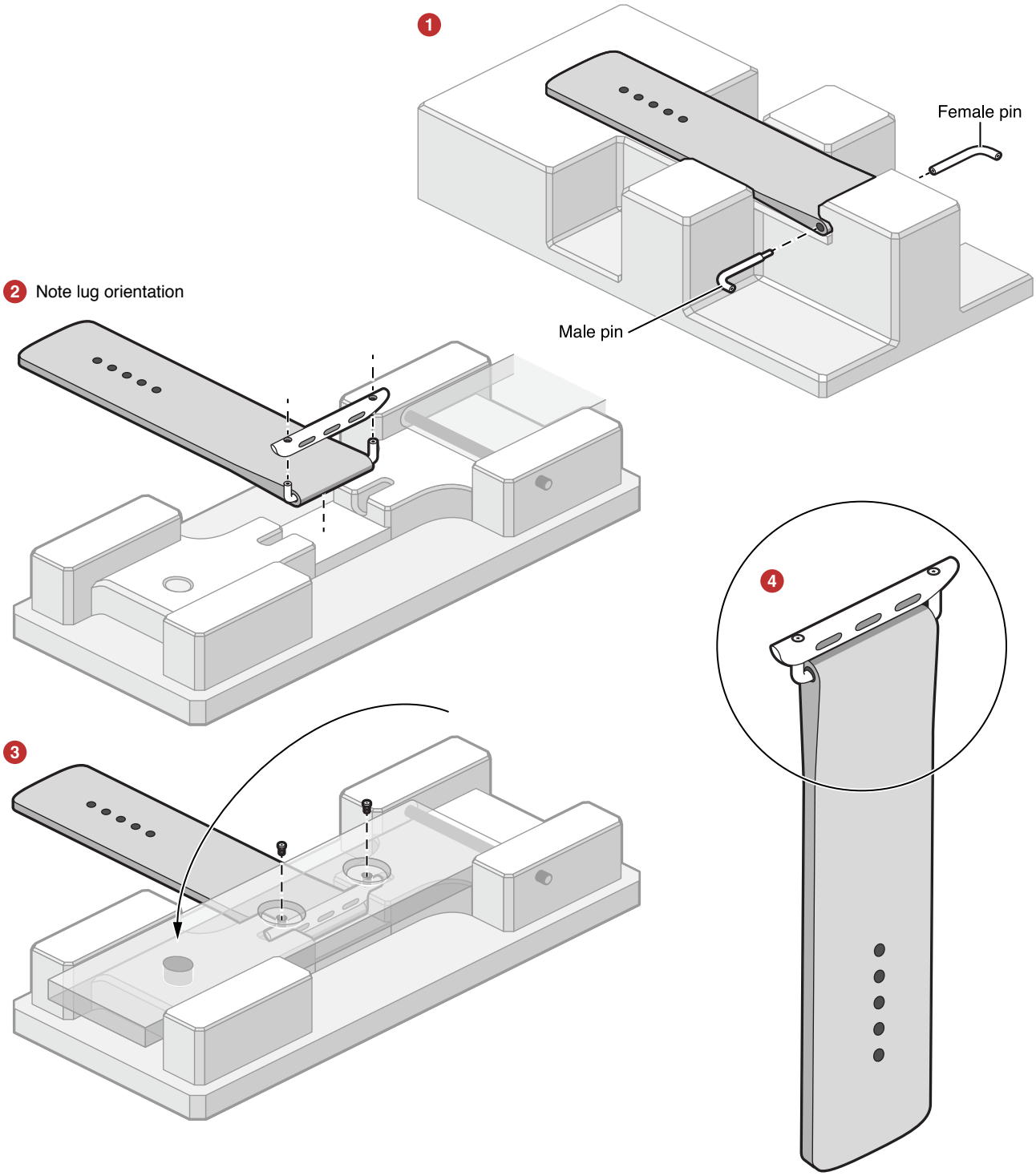

Copyright © 2022 Apple Inc. All Rights Reserved.

16.4 Example Apple Watch Lug

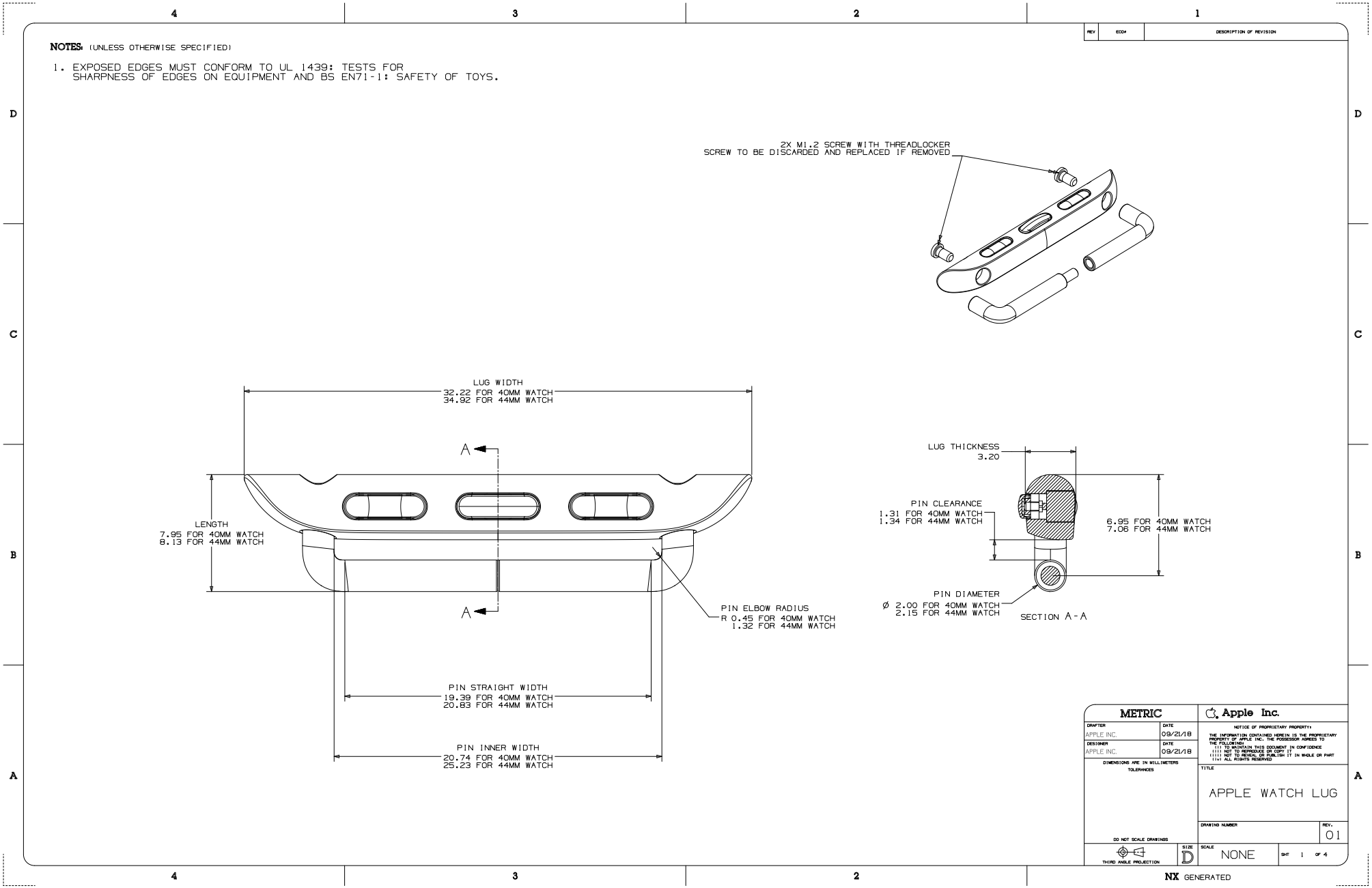

17. Continuity Camera Mounts

Continuity Camera enables iPhone cameras to be used with a Mac and enables Portrait, Studio Light, Center Stage, and Desk View video effects. This feature is supported on iOS 16.0 or later and macOS 13.0 Ventura or later.

Continuity Camera Mounts securely hold an iPhone at the optimal height and angle near or on a Mac, external display or tripod.

Figure 17-1 Continuity Camera MacBook Desk View example

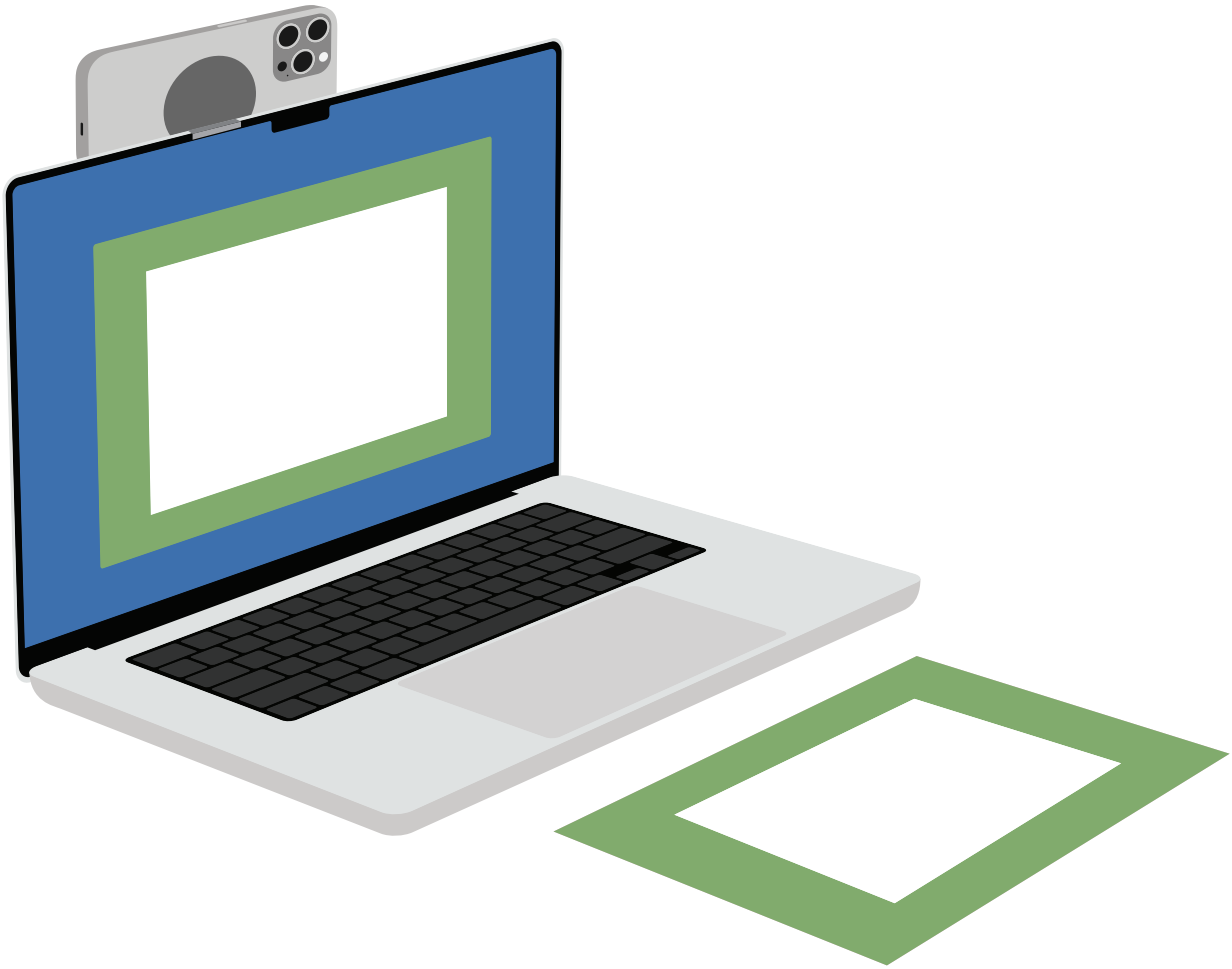

2022-07-08 | Copyright © 2022 Apple Inc. All Rights Reserved.

Center Stage and Desk View are supported on the following devices:

- iPhone 13 Pro Max
- iPhone 13 Pro
- iPhone 13
- iPhone 13 mini
- iPhone 12 Pro Max
- iPhone 12 Pro
- iPhone 12
- iPhone 12 mini
- iPhone 11 Pro Max
- iPhone 11 Pro
- iPhone 11

Studio Light is supported on iPhone 12 or later including iPhone SE (3rd generation).

iPhone as a webcam and Portrait mode are supported on iPhone XR or later.

17.1 Product Design

All Continuity Camera Mounts:

- Shall support devices in portrait and landscape orientations.
- Shall enable use of a Lightning to USB charge/sync cable.
- Shall not touch the device cover glass, block any device camera field of view, or obstruct any ambient light sensors, see Device Dimensional Drawings (page 201).
- Shall not cause Scratches and Damage (page 22).
- Should prevent free rotation of the iPhone.
- Should enable an iPhone camera lens height of at least 228 mm to support Desk View.
- Should not obstruct Access to Controls (page 29).
- Should implement the MagSafe Accessory Magnet Array (page 125).
- Should support Tripod Connections (page 27).

Apple recommends using a Lightning to USB charge/sync cable during Continuity Camera use.

Additional requirements apply to Continuity Camera Mounts used in the following scenerios:

- MacBook Mount (page 94)
- iMac or Display Mount (page 95)

2022-07-08 | Copyright © 2022 Apple Inc. All Rights Reserved.

17.2 MacBook Mount

Figure 17-2 MacBook mount example

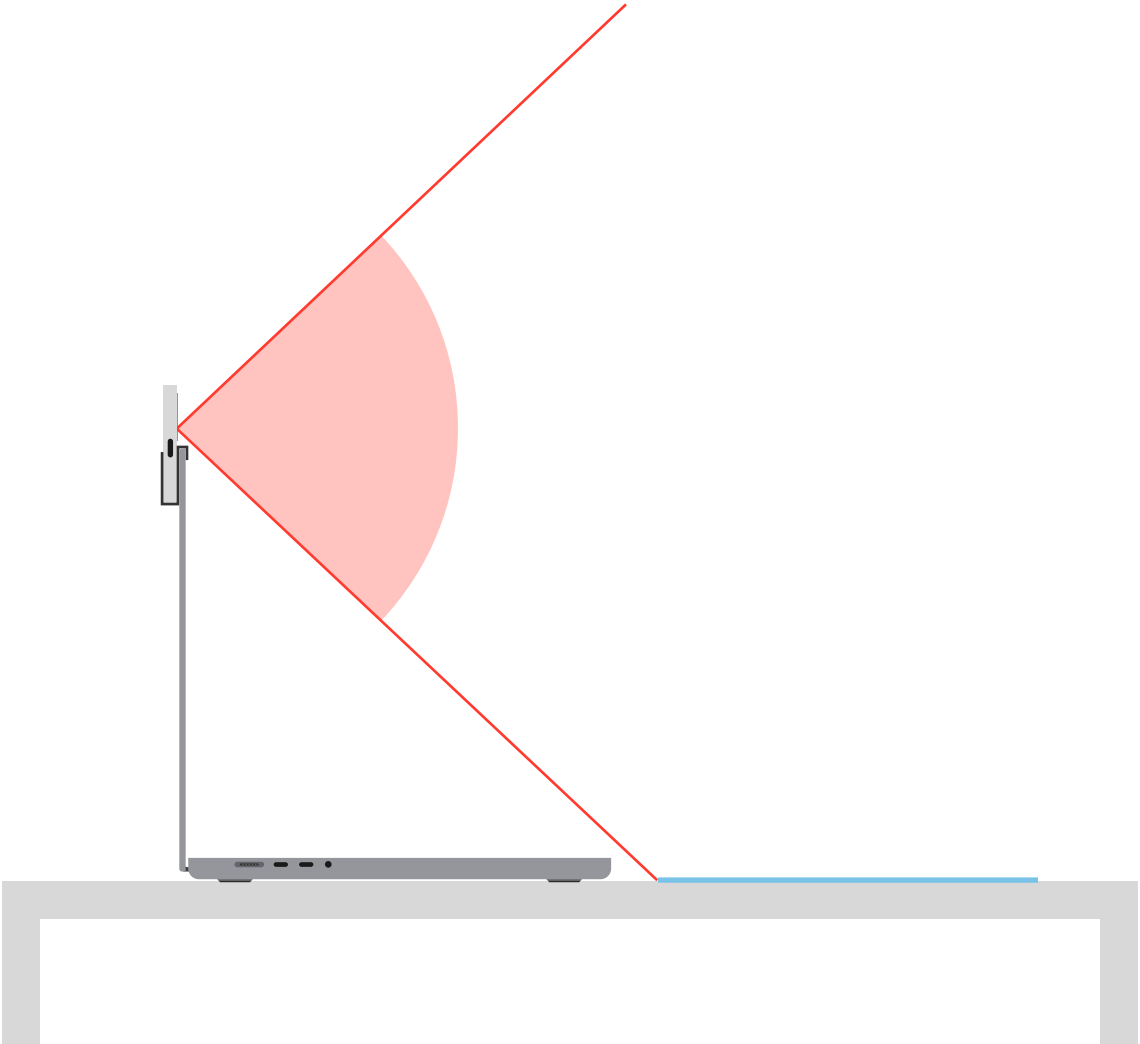

A Continuity Camera Mount designed for MacBook:

- Shall not scratch or damage the MacBook.
- Shall not touch the MacBook display glass (active and non-active areas).
- Shall not interfere with or prevent fully closing the MacBook.
- Shall not sandwich or squeeze the MacBook and the iPhone together.
- Should not cover or touch any portion of the MacBook display glass, camera, or other sensors.
- Should enable a downward tilt in portrait orientation from 0° to 12° to support Desk View.
- Should minimize the mass to maintain stability of the display.

2022-07-08 | Copyright © 2022 Apple Inc. All Rights Reserved.

17.3 iMac or Display Mount

Figure 17-3 Display mount example

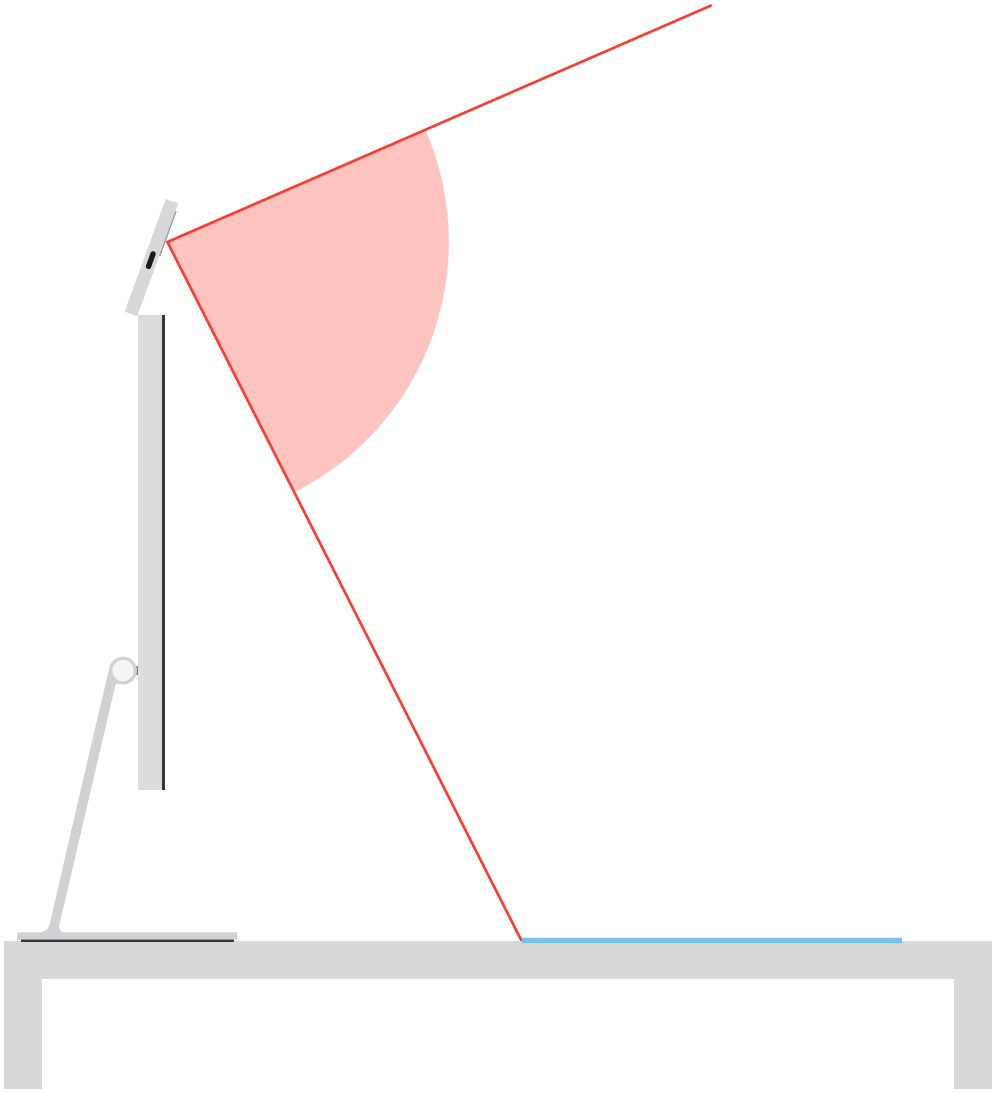

A Continuity Camera Mount designed for iMac or displays:

- Shall not scratch or damage the iMac or display.
- Shall not touch the display glass (active and non-active areas).
- Shall not sandwich or squeeze the iMac or display and the iPhone together.
- Should not cover or touch any portion of the display glass, camera, microphones, or other sensors.
- Should enable a downward tilt from 0° to 30° to support Desk View.

2022-07-08 | Copyright © 2022 Apple Inc. All Rights Reserved.

17.4 Test Procedures

17.4.1 Equipment

The following equipment is needed to perform the tests in this procedure:

- Continuity Camera Mount to be tested.
- Supported devices running iOS 16.0 or later.
- A Mac computer running macOS 13.0 Ventura or later.
  - A MacBook if the mount is designed for MacBook.
  - An iMac if the mount is designed for iMac.
- An Apple ID used on all Mac computers and devices with two-factor authentication enabled.
- A variety of displays if the mount is designed for external displays.
- A tripod if the mount is designed for tripod connections.
- A Lightning to USB charge/sync cable.

17.4.2 Enable Continuity Camera

To configure a Mac and device to enable Continuity Camera:

1. Connect the device to the Mac using a Lightning to USB charge/sync cable.
2. If the Mac is not a trusted computer, select *Trust* on the 'Trust This Computer' alert on the device.
3. To use Continuity Camera wirelessly, remove the Lightning to USB charge/sync cable.
4. Open FaceTime on the Mac.
5. If the 'Use your iPhone as a Camera for your Mac' alert appears, select *Continue*.
6. Select the Continuity Camera option from the Video menu.
7. The Continuity Camera view will display in FaceTime.

To reconnect after the Mac and/or device are in sleep mode:

1. Wake the device and the Mac.
2. Connect the device to the Mac using a Lightning to USB charge/sync cable for a wired connection or disconnect the cable for a wireless connection.
3. Open FaceTime on the Mac and select Continuity Camera from the Video menu.
4. The Continuity Camera view will display in FaceTime.

17.4.3 Product Design

Verify the Continuity Camera Mount:

1. Supports portrait and landscape orientations.
2. Does not touch the device cover glass or block any device camera field of view.
3. Enables use of Lightning to USB charge/sync cables.
4. Does not scratch or damage the device.

2022-07-08 | Copyright © 2022 Apple Inc. All Rights Reserved.

If the mount is designed for MacBook, iMac or displays, verify the mount:

1. Does not touch the display glass.
2. Does not block any MacBook, iMac or display camera field of view.
3. Does not sandwich or squeeze the device, MacBook, iMac, or display together.
4. Does not scratch or damage the device, MacBook, iMac, or display.

17.4.4 Center Stage

Center Stage is a video effect available in the Mac Control Center. Selecting Video Effects and enabling Center Stage will cause the video to follow people as they move within the Continuity Camera field of view. The video will zoom (in and out) and pan (left to right, right to left, up and down), to keep people in the frame.

1. Ensure the device is awake, and logged into the same Apple ID account as the Mac.
2. Place the device in the mount and on the MacBook, iMac, display, tripod or free-standing support.
3. Perform mount testing using the Photo Booth app with and without Center Stage enabled.
   a. Open the Photo Booth app on the Mac, use the Camera menu to select Continuity Camera.
   b. Use the still photo mode.
4. Use the Mac Control Center menu to select Video Effects, and enable Center Stage.
5. Capture photos from different positions using Center Stage face tracking, in portrait and landscape orientation, waiting 5 seconds between each photo.
6. Use the Mac Control Center menu to select Video Effects, and disable Center Stage.
7. Capture photos in portrait and landscape orientation, waiting 5 seconds between each photo.
8. Using the Photo Booth film strip feature, verify all photos taken during the test:
   a. Are saved to the computer.
   b. Are clearly displayed when viewed.
   c. Have no visible anomalies caused by the mount in either portrait and landscape orientation.

17.4.5 Desk View

Desk View is a video effect available in the Mac Control Center. Selecting Video Effects and enabling Desk View causes a confirmation dialog box to appear, then a separate Desk View window opens. The tilt angle of the Continuity Camera Mount and its mount position determines the Desk View field of view. Adjust the tilt angle as necessary to display the desktop subject matter. Remote viewers will see the subject matter from the presenters perspective. Closing the Desk View window disables Desk View.

1. Ensure the device is awake, and logged into the same Apple ID account as the Mac.
2. Place the device in the mount and on the MacBook, iMac, display, tripod or free-standing support.
3. Perform mount testing using the FaceTime app with the Desk View video effect enabled.
   a. Open the FaceTime app on the Mac, and use the Video menu to select the Continuity Camera.
   b. Use the Mac Control Center menu to select Video Effects, and enable Desk View.

Copyright © 2022 Apple Inc. All Rights Reserved.

   c. Verify the Desk View window is displayed.
4. In both landscape and portrait orientation:
   a. Adjust the tilt angle of the Continuity Camera Mount to display the desktop subject matter in the Desk View window.
   b. Verify the desktop subject matter is visible in the Desk View window, and clearly displayed.
   c. Verify there are no visible anomalies caused by the mount in the Desk View window.
   d. Verify the user's face is still visible in FaceTime while Desk View is showing the desktop subject matter.

2022-07-08 | Copyright © 2022 Apple Inc. All Rights Reserved.

Features

18. Bluetooth Accessory Identification

This chapter describes Apple-specific Bluetooth commands extending accessory capabilities beyond those supported by standard Bluetooth profiles.

To enable Apple-specific features, the accessory shall support HFP Command AT+XAPL (page 100), which provides accurate information about the accessory's supported features. The device will use the information sent by this command to enable and disable custom commands.

The accessory shall send the following AT+XAPL command after making a successful HFP Service Level Connection (SLC) to the device. The accessory should send an AT+XAPL command first, before sending any additional Apple-specific commands. See Siri (page 140) and Bluetooth Headset Battery Level Indication (page 107).

18.1 HFP Command AT+XAPL

Description: Enables custom AT commands from an accessory.

Initiator: Bluetooth accessory

Format: AT+XAPL=*vendorID*-*productID*-*version*,*features*

Parameters:

- *vendorID*: A string representation of the hex value of the vendor ID from the manufacturer, without the `0x` prefix.
- *productID*: A string representation of the hex value of the product ID from the manufacturer, without the `0x` prefix.
- *version*: The software version.
- *features*: A base-10 representation of a bit field. Available features are:
  - Bit 0 = reserved
  - Bit 1 = The accessory supports battery reporting (reserved only for battery operated accessories).
  - Bit 2 = The accessory is docked or powered (reserved only for battery operated accessories).
  - Bit 3 = The accessory supports Siri status reporting.
  - Bit 4 = the accessory supports noise reduction (NR) status reporting.
  - All other values are reserved.

Example: AT+XAPL=ABCD-1234-0100,10 (Supports battery reporting and Siri status)

Copyright © 2022 Apple Inc. All Rights Reserved.

Response: +XAPL=iPhone,*features*

2022-07-08 | Copyright © 2022 Apple Inc. All Rights Reserved.

19. Accessory Power (Lightning)

Accessories may draw a limited amount of power from a device and avoid the need to integrate a battery or connect to an external power source. This feature may eliminate the need for users to manage an additional accessory battery and permits the accessory to function as long as the device has power.

Accessories temporarily connecting to the device are good candidates for this feature. Additionally, the accessory should integrate the Lightning Receptacle (C37) and implement Lightning Receptacle (C37) Passthrough Power so users can charge the device from an external power source while the accessory is attached.

See the Accessory Interface Specification (page 19) for more information.

2022-07-08 | Copyright © 2022 Apple Inc. All Rights Reserved.

20. App Discovery

The App Discovery feature enables accessories to retrieve a list of installed apps on the device that can communicate with the accessory. See App Launch (page 104) to make use of the list.

See the Accessory Interface Specification (page 19) for more information.

2022-07-08 | Copyright © 2022 Apple Inc. All Rights Reserved.

21. App Launch

Accessories supporting the App Launch feature can request a device launch an app on its behalf.

Figure 21-1 App Launch Alert

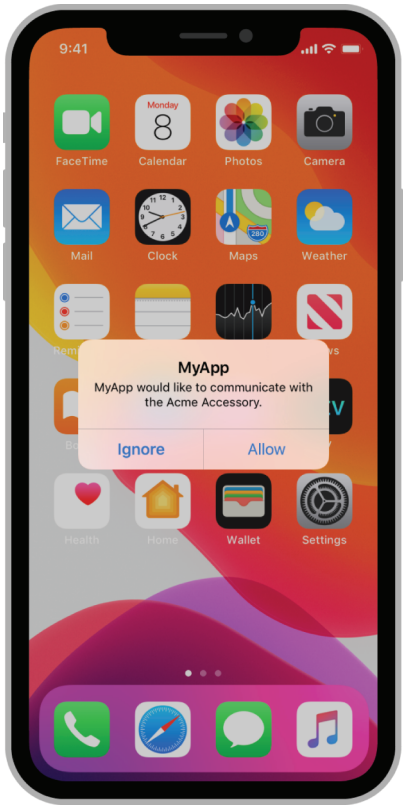

See the Accessory Interface Specification (page 19) for more information.

22. App Match

The App Match feature enables accessories supporting the External Accessory Protocol feature to match with compatible apps on the App Store.

When connected for the first time, the device asks the user if they would like to visit the App Store and view compatible apps. Subsequently, this action may be repeated by the user using *Settings* > *General* > *About* > '*Accessory Name*' > '*Find App for this Accessory*'.

Matched apps are listed in alphabetical order with one exception. If the accessory works with apps from multiple development teams/companies, the accessory may provide a preferred Team ID to place apps from the preferred team at the top of the list.

Figure 22-1 App Match Alert

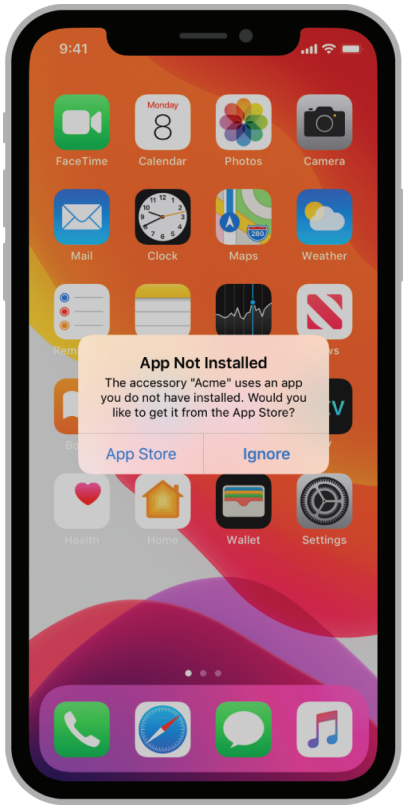

See the Accessory Interface Specification (page 19) for more information.

2022-07-08 | Copyright © 2022 Apple Inc. All Rights Reserved.

23. Bluetooth Headset Battery Level Indication

Any Hands-Free Bluetooth headset accessory may display its battery level to the user as an indicator icon in the device status bar. This feature is supported on all devices supporting the Hands-Free Profile, including iPhone, iPod touch, and iPad.

Headset battery indication is implemented by two Apple-specific Bluetooth HFP AT commands, HFP Command AT+XAPL (page 100) and HFP Command AT+IPHONEACCEV (page 107)

23.1 HFP Command AT+IPHONEACCEV

Description: Reports a headset state change.

Initiator: Headset accessory

Format: `AT+IPHONEACCEV=`*Number of key/value pairs*`,`*key1*`,`*val1*`,`*key2*`,`*val2*`,...`

Parameters:

- *Number of key/value pairs*: The number of parameters coming next.
- *key*: the type of change being reported:
  - 1 = Battery Level
  - 2 = Dock State
- *val*: the value of the change:
  - Battery Level: string value between '`0`' and '9'
  - Dock State: `0` = undocked, 1 = docked

Example: `AT+IPHONEACCEV=1,1,3`

Copyright © 2022 Apple Inc. All Rights Reserved.

24. Device Power (Lightning)

The Device Power feature enables accessories to report their power characteristics and provide power to a device.

Apple strongly recommends providing power to the device whenever possible for the best user experience.

Accessories providing power to a device shall connect to the device either through an integrated Lightning connector or a USB to Lightning cable. To incorporate an integrated Lightning connector, the accessory developer shall be a member of the Apple MFi Licensing Program (page 20).

Accessories providing power to a device shall either:

- Provide direct power, see Direct Power Source (page 108).
- Manage power from external sources, see External Power Source (page 108).

Accessories without the potential for data communication with the device shall provide direct power to the device, see Direct Power Source (page 108).

24.1 Direct Power Source

Accessories providing power directly shall provide power at all times unless a direct user action is taken turning the accessory 'off'. Failure to provide power at all times may result in the accessory being unable to charge a device whose battery level is too low to boot.

All accessory power source testing shall be performed with programmable loads, not devices. Device power draw varies with environmental factors.

24.2 External Power Source

Accessories drawing power from external power sources and providing all or a portion of their power to the device shall identify the power source's capability and report accordingly to the device.

2022-07-08 | Copyright © 2022 Apple Inc. All Rights Reserved.

> **Note:**
> Accessories shall not manipulate a device into drawing more power from the external power source than the device would normally draw when directly connected to the external power source.
>
> Accessories shall not manipulate a device into drawing less than the minimum power required by the accessory compatibility claims if it is available from the external source, see Providing Power using USB Connectors (page 109).

Accessories drawing power from external power sources may inform the device when power is not available or only available at a reduced level (for example, from an internal battery) or when the user unplugs the accessory from the external power source (for example, an AC power adapter or AC "mains" power outlet). Power to the device shall be restored and the updated power providing capability change shall be communicated to the device when the user re-connects the external power source.

See AC Power Adapters (page 64), Integrated USB Receptacles (page 22), and User Supplied Cables and AC Power Adapters (page 22) for additional requirements specific to external USB power supplies/cables.

24.3 Declaring Capability

If the accessory provides power using a:

- USB-A receptacle, it shall use one of the following to declare its power providing capability:
  - USB Power Capability Vendor Request (page 159).
  - USB D+/D- Resistor Networks (page 160).
- USB-C receptacle, then:
  - It shall use one of the following to declare its power providing capability:
    - USB-C Current (page 164).
    - USB Power Delivery (page 163).
  - If the accessory does not have the potential for data communication with the device, it shall also support the *USB Battery Charging 1.2* specification.

24.4 Providing Power using USB Connectors

If the accessory connects using a USB-A receptacle, see USB-A Receptacle (page 194).

If the accessory connects using a USB-C receptacle, see USB-C Receptacle (page 197).

Copyright © 2022 Apple Inc. All Rights Reserved.

24.5 Labeling Multiple Connectors

If the accessory has multiple connectors with different device compatibilities, the iPad-compatible connectors shall be labeled with the text 'iPad' unless it is physically impossible to connect an iPad to the iPhone/iPod compatible connectors.

24.6 Fast Charge for iPhone (20 W)

Accessories advertising "fast charge" for iPhone (https://support.apple.com/en-us/HT208137) shall:

- Support USB Power Delivery (page 163).
- Supply at least 20 W (2.22 A at 9 V) using USB-PD.
- Claim compatibility with at least one of the following iPhone models:
  - iPhone SE (3rd generation)
  - iPhone 13 Pro Max
  - iPhone 13 Pro
  - iPhone 13
  - iPhone 13 mini
  - iPhone 12 Pro Max
  - iPhone 12 Pro
  - iPhone 12
  - iPhone 12 mini
  - iPhone SE (2nd generation)
  - iPhone 11 Pro Max
  - iPhone 11 Pro
  - iPhone 11
  - iPhone XS Max
  - iPhone XS
  - iPhone XR
  - iPhone X
  - iPhone 8 Plus
  - iPhone 8

Accessories such as charging cables should be capable of supporting up to 60 W (3 A at 20 V) to provide compatibility with a variety of sources and devices.

Copyright © 2022 Apple Inc. All Rights Reserved.

24.7 Overcurrent and Short Circuit Protection

Figure 24-1 Overcurrent and Short Circuit Protection

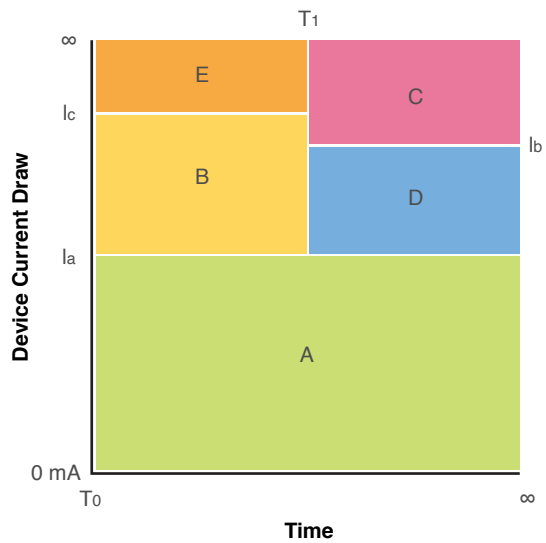

Power-providing accessories shall implement overcurrent and short circuit protection for each region in Figure 24-1 (page 111) according to Table 24-1 (page 111), Table 24-2 (page 111), and Table 24-3 (page 112).

Table 24-1 Overcurrent/Short Circuit Protection Current Thresholds

Threshold	Definition
I_a	Nominal accessory output current (for example, 1000 mA, 2100 mA, 2400 mA, 3000 mA).
I_b	I_a + 60%.
I_c	Lowest device current draw that will cause accessory output voltage (measured at Lightning Device Power) to drop below 2 V.

Table 24-2 Overcurrent/Short Circuit Protection Time Thresholds

Threshold	Definition
T_0	Start of any device current draw transient.
T_1	Accessory overcurrent/short circuit deglitch/debounce time, shall ≥ T_0 + 1 ms.

2022-07-08 | Copyright © 2022 Apple Inc. All Rights Reserved.

Table 24-3 Overcurrent/Short Circuit Protection Behaviors

Region	Name	Accessory Behavior
A	Normal Operation	Accessory shall not limit or shutdown output current.
B	Overcurrent Transient	Accessory shall not shutdown output current. Accessory may limit output current to I_a or higher.
C	Overcurrent	Accessory shall shutdown output current.
D	Potential Overcurrent	Accessory may shutdown output current.
E	Potential Short Circuit	If Lightning Device Power voltage drops below 2 V, the accessory may trigger short circuit protection. Accessories shall not trigger short circuit protection on device current draw.

24.8 Overcurrent and Short Circuit Protection Resets

Accessory overcurrent and short circuit protection shall reset without mechanical intervention.

24.9 Power State Changes

Accessories shall not change the amount of power provided to a device unless:

- Direct user action is taken to turn the accessory on or off.
- An external power source (for example, mains electricity or battery) is connected to or disconnected from the accessory.
- The accessory's internal power source (for example, a battery) is depleted or loaded to the point where it is no longer capable of supplying its declared power providing capability or is now capable of supplying more power than previously declared.

2022-07-08 | Copyright © 2022 Apple Inc. All Rights Reserved.

25. Device Power (Inductive)

Accessories may provide power to devices using integration of a Qi transmitter.

The following devices support this feature:

- iPhone SE (3rd generation)
- iPhone 13 Pro Max
- iPhone 13 Pro
- iPhone 13
- iPhone 13 mini
- iPhone 12 Pro Max
- iPhone 12 Pro
- iPhone 12
- iPhone 12 mini
- iPhone SE (2nd generation)
- iPhone 11 Pro Max
- iPhone 11 Pro
- iPhone 11
- iPhone XS Max
- iPhone XS
- iPhone XR
- iPhone X
- iPhone 8 Plus
- iPhone 8

This feature is supported on iOS 11.2 or later.

25.1 Qi Wireless Power

Accessories incorporating a Qi transmitter shall be certified according to *The Qi Wireless Power Transfer System, Power Class 0 Specification*, version 1.2.4, see https://www.wirelesspowerconsortium.com.

25.2 Electromagnetic Compatibility (EMC)

Accessories providing inductive device power should be designed for electromagnetic compatibility.

Copyright © 2022 Apple Inc. All Rights Reserved.

Apple recommends shielding the magnetic field from the charging coil and maintaining a low impedance shield termination for cables to comply with regulatory EMC requirements for the completed product. Implementation, final compliance testing, report preparation, and labeling are the responsibilities of the company marketing and producing the product.

Cable termination is critical for reduced emissions. Cable termination and connectors should be kept away from the charging coil and cables should be routed away from the charging surface.

If emissions are present, adding clamp-on ferrites/absorbers to the cable can help reduce emissions. Selected ferrite/absorber materials should be rated for the failing frequencies.

Depending on the accessory's supported use cases, testing should be performed with the following power supplies:

- Apple USB-C Power Adapters:
  - Apple 96W USB-C Power Adapter
  - Apple 61W USB-C Power Adapter
  - Apple 30W USB-C Power Adapter
  - Apple 20W USB-C Power Adapter
- Apple USB Power Adapters:
  - Apple 12W USB Power Adapter
  - Apple 5W USB Power Adapter
    - Model A1385 (US)
    - Model A1400 (Int.)
    - Model A1552 (UK)
    - Model A1443 (China)
    - Model A1444 (Australia)
    - Model A1486 (Brazil)
    - Model A1487 (Korea)
    - Model A1501 (Argentina)
- Apple Mac computers:
  - Apple MacBook Pro
  - Apple MacBook

If power sources are used differing from those listed above, emission testing should be performed while the power sources are on.

In addition to the use cases above, charging devices should be tested in idle mode for emissions.

Emissions tests should be conducted in accordance with standards referenced in the following:

- FCC CFR 47, Part 15
- ICES-003, Issue 5, CAN/CSA-CEI/IEC CISPR 22-10
- CISPR 22: 2008
- EN 55022: 2010

2022-07-08 | Copyright © 2022 Apple Inc. All Rights Reserved.

- AS/NZS CISPR 22:2009, TCVN 7189:2009
- VCCI V-3/2013.04
- GB 9254-2008, GB 17625.1-2012, GB 17625.2-2007, CNS 13438-2006
- CISPR 24: 2010
- EN 55024: 2010

Once the highest emitting combination is identified, complete testing should be performed on that configuration. Some regulatory domains may require EMC certification.

2022-07-08 | Copyright © 2022 Apple Inc. All Rights Reserved.

26. Location Information

Location features enable accessories to provide Global Navigation Satellite System (GNSS) and sensor data (for example, speed) to devices in the form of National Marine Electronics Association (NMEA) sentences. Devices can use the additional information to augment built-in location services. For example, some external accessories provide more accurate or more frequent position updates. Additionally, devices can conserve power by using location information from a self-powered external accessory.

See the Accessory Interface Specification (page 19) for more information.

2022-07-08 | Copyright © 2022 Apple Inc. All Rights Reserved.

27. MagSafe Attach

The following devices support MagSafe Attach:

- iPhone 13 Pro Max
- iPhone 13 Pro
- iPhone 13
- iPhone 13 mini
- iPhone 12 Pro Max
- iPhone 12 Pro
- iPhone 12
- iPhone 12 mini

MagSafe Cases (page 28) shall:

- Claim compatibility with a MagSafe-capable device.
- Integrate a MagSafe Case Magnet Array (page 118).

Other MagSafe accessories shall:

- Claim compatibility with a MagSafe-capable device.
- Integrate a MagSafe Accessory Magnet Array (page 125).

Apple recommends the following magnet array vendors:

- Ningbo Sanhuan Magsound Industry&Trade Co., Ltd. (http://magsound.com)
- Phone In Mag Electronics Co., Ltd. (http://www.phonein.com.tw)
- Quadrant Solutions, Inc. (https://www.quadrant.us)

2022-07-08 | Copyright © 2022 Apple Inc. All Rights Reserved.

27.1 MagSafe Case Magnet Array

Figure 27-1 MagSafe Case Magnet Array

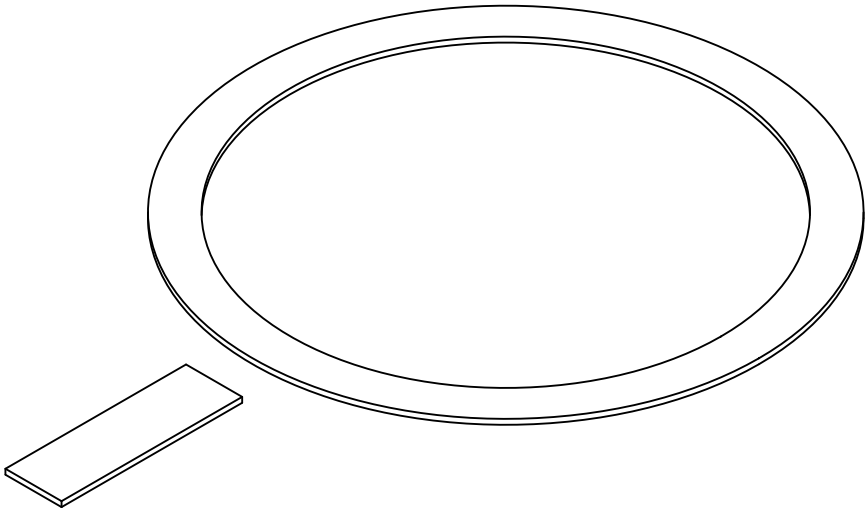

27.1.1 Product Design

All cases integrating a MagSafe case magnet array shall:

- Enclose the device.
- Have a uniform thickness no greater than 2.1 mm; Apple recommends 2.0 mm.
- Firmly attach to the device without relying on the magnets.
- Not integrate magnets on the back of the case other than the MagSafe magnets.
- Comply with requirements for Cases (page 28).
- Work with:
  - Apple MagSafe Charger.
  - Apple MagSafe Battery Pack.
  - iPhone Leather Wallet.

27.1.2 Mechanical

All magnets that are part of the MagSafe case magnet array shall be positioned in the same plane.

The case and MagSafe case magnet array shall enable MagSafe accessories to magnetically self align within a 1.55 mm radial maximum.

Copyright © 2022 Apple Inc. All Rights Reserved.

27.1.2.1 Magnets

All MagSafe case magnets shall be N45SH NdFeB with a 7 µm - 13 µm NiCuNi plating finish (or similar) and shall meet the requirements in Table 27-1 (page 119).

Table 27-1 Magnet Properties

Property	Minimum	Maximum
Br	13.2 kGs	13.6 kGs
Hcb	12.75 kOe	
Hcj	20.50 kOe	
BHmax	43 MGOe	46 MGOe

27.1.2.2 Magnet Array

The magnets shall be positioned in the case following the dimensions and polarity shown in Figure 27-2 (page 120), Figure 27-3 (page 121) and Figure 27-4 (page 121).

2022-07-08 | Copyright © 2022 Apple Inc. All Rights Reserved.

Figure 27-2 MagSafe Magnet Array Dimensions

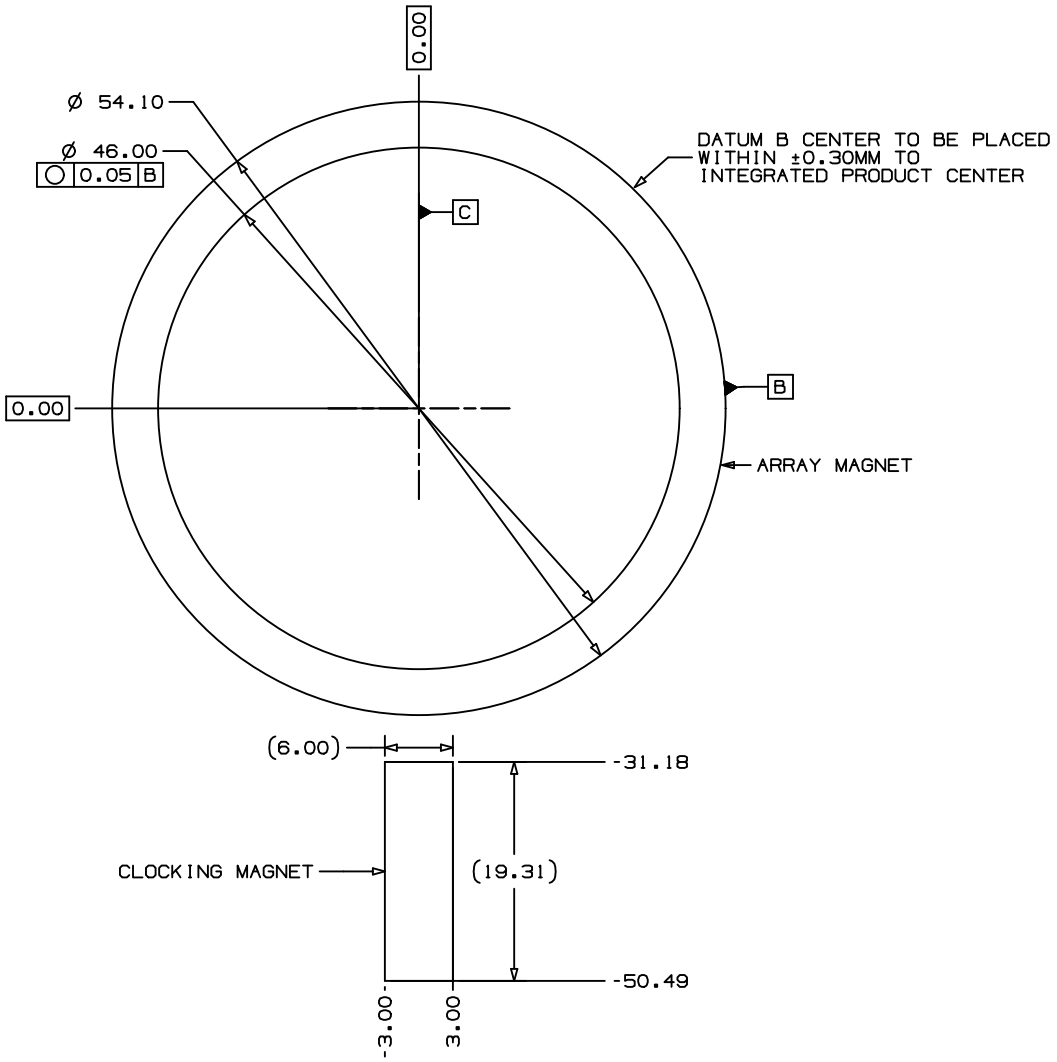

Copyright © 2022 Apple Inc. All Rights Reserved.

Figure 27-3 MagSafe Magnet Ring Dimensions and Polarity

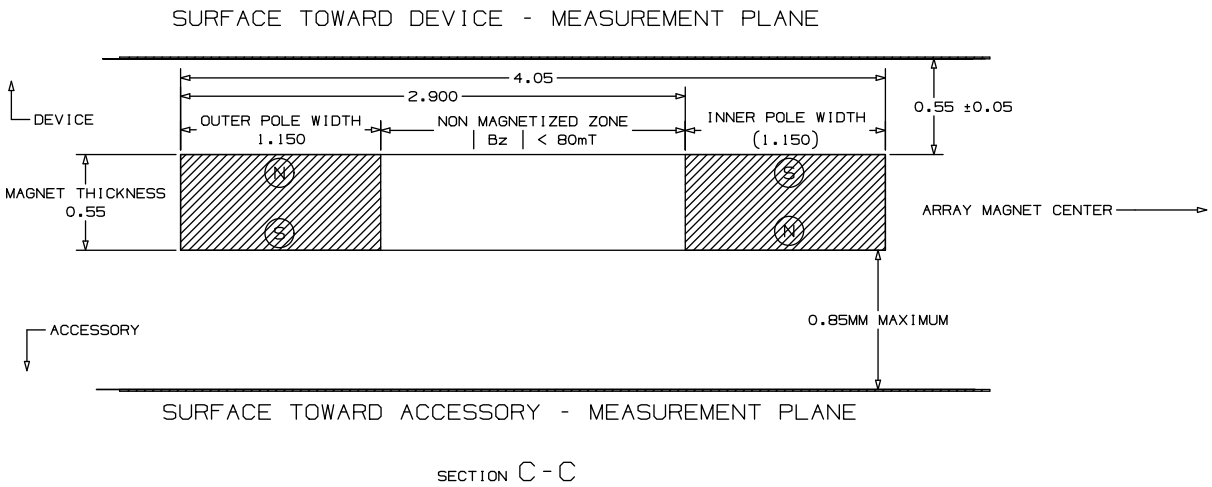

Figure 27-4 MagSafe Orientation Magnet Dimensions and Polarity

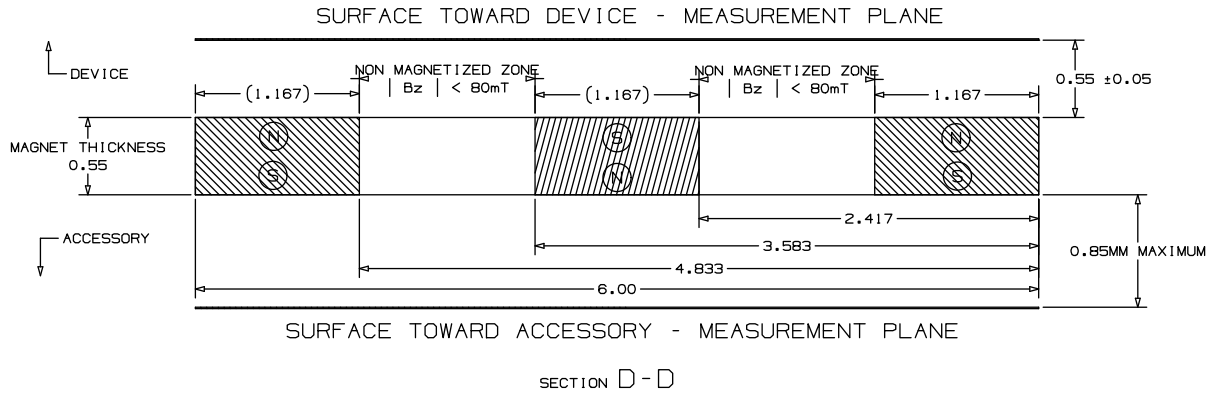

The flux density of a MagSafe case magnet ring shall comply with Table 27-2 (page 122) and Table 27-3 (page 123) across the 8 lines (S1 - S8) in Figure 27-5 (page 122).

Copyright © 2022 Apple Inc. All Rights Reserved.

Figure 27-5 MagSafe Flux Density Measurement Plane

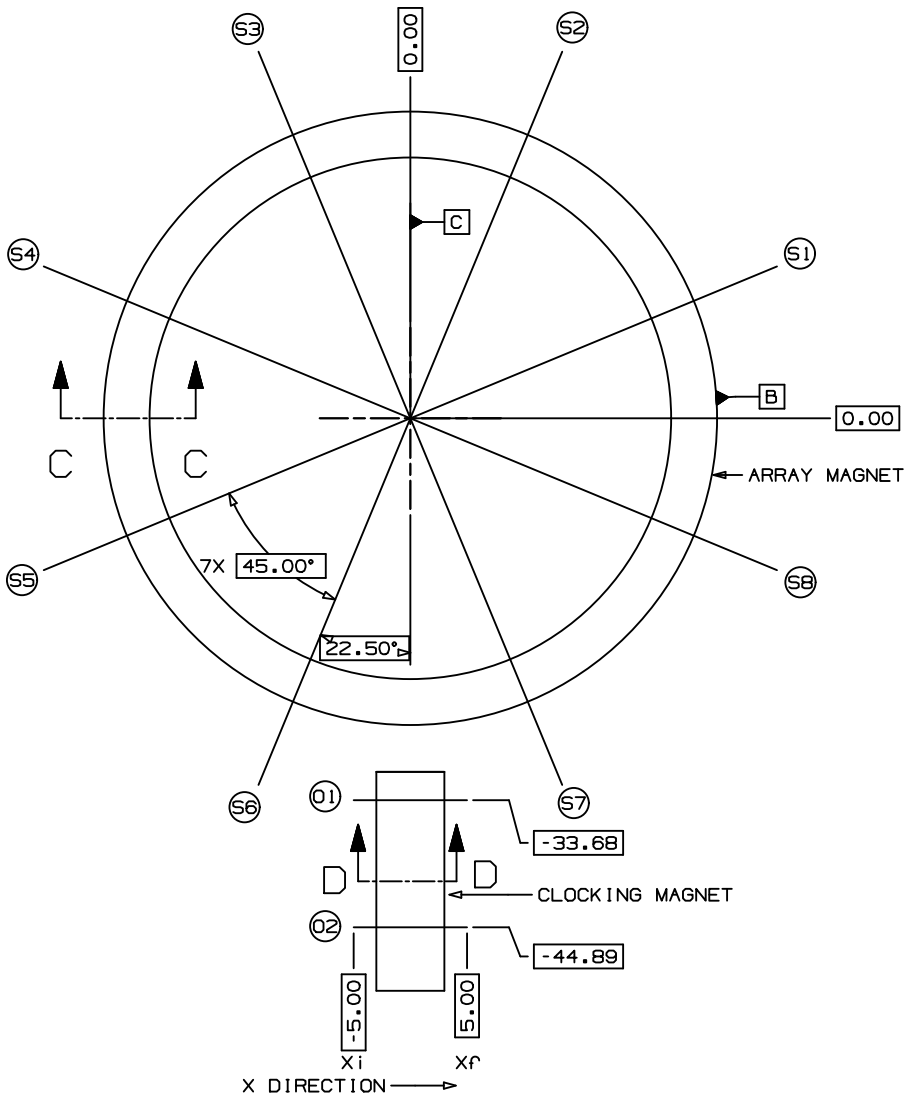

Table 27-2 Device side flux density at 0.55 mm from magnet ring surface

Minimum r	Maximum r	Minimum Bz	Maximum Bz	Minimum Bxy	Maximum Bxy
	19.5 mm	-0.020 T	0.020 T		0.025 T
19.5 mm	23 mm				0.075 T
23 mm	24 mm	-0.170 T	-0.125 T		
24 mm	26 mm			0.095 T	0.1325 T
26 mm	27 mm	0.125 T	0.170 T		

Copyright © 2022 Apple Inc. All Rights Reserved.

Minimum r	Maximum r	Minimum Bz	Maximum Bz	Minimum Bxy	Maximum Bxy
27 mm	30 mm				0.075 T
30 mm		-0.020 T	0.000 T		0.025 T

Table 27-3 Accessory side flux density at 0.80 mm from magnet ring surface

Minimum r	Maximum r	Minimum Bz	Maximum Bz	Minimum Bxy	Maximum Bxy
	19.5 mm	-0.020 T	0.020 T		0.025 T
19.5 mm	23 mm				0.065 T
23 mm	24 mm	-0.120 T	-0.085 T		
24 mm	26 mm			0.070 T	0.100 T
26 mm	27 mm	0.85 T	0.120 T		
27 mm	30 mm				0.065 T
30 mm		-0.020 T	0.000 T		0.025 T

The flux density of a MagSafe case orientation magnet shall comply with Table 27-4 (page 123) and Table 27-5 (page 123) across the 2 lines (O1 and O2) in Figure 27-5 (page 122).

Table 27-4 Device side flux density at 0.55 mm from orientation magnet surface

Minimum x	Maximum x	Minimum Bz	Maximum Bz	Minimum Bxy	Maximum Bxy
	-5.0 mm	-0.020 T	0.020 T		0.025 T
-5.0 mm	-4.5 mm	-0.020 T	0.020 T		
-4.5 mm	-2.75 mm			0.080 T	0.110 T
-2.75 mm	-2.0 mm	0.125 T	0.175 T		
-2.0 mm	-0.5 mm			0.110 T	0.155 T
-0.5 mm	0.5 mm	-0.1925 T	-0.140 T		
0.5 mm	2.0 mm			0.110 T	0.155 T
2.0 mm	2.75 mm	0.125 T	0.175 T		
2.75 mm	4.0 mm			0.080 T	0.110 T
4.0 mm	5.0 mm	-0.020 T	0.020 T		
5.0 mm		-0.020 T	0.020 T		0.025 T

Table 27-5 Accessory side flux density at 0.80 mm from orientation magnet surface

Minimum x	Maximum x	Minimum Bz	Maximum Bz	Minimum Bxy	Maximum Bxy
	-5.0 mm	-0.020 T	0.020 T		0.025 T

2022-07-08 | Copyright © 2022 Apple Inc. All Rights Reserved.

Minimum x	Maximum x	Minimum Bz	Maximum Bz	Minimum Bxy	Maximum Bxy
-5.0 mm	-4.5 mm	-0.020 T	0.020 T		
-4.5 mm	-2.75 mm			0.050 T	0.070 T
-2.75 mm	-2.0 mm	0.085 T	0.120 T		
-2.0 mm	-0.5 mm			0.0825 T	0.115 T
-0.5 mm	0.5 mm	-0.140 T	-0.0975 T		
0.5 mm	2.0 mm			0.0825 T	0.115 T
2.0 mm	2.75 mm	0.085 T	0.120 T		
2.75 mm	4.0 mm			0.050 T	0.070 T
4.0 mm	5.0 mm	-0.020 T	0.020 T		
5.0 mm		-0.020 T	0.020 T		0.025 T

27.1.2.3 Magnetic Force

The force normal to the back of the case that is needed to dislodge a MagSafe accessory, such as the Apple MagSafe Charger, shall meet the requirements in Table 27-6 (page 124).

Table 27-6 Magnetic force

Scenario	Minimum	Maximum
Case attached to device	800 gf	1100 gf
Case only	600 gf	900 gf

27.1.3 Magnetic Interference

All cases with an integrated MagSafe magnet array shall not interfere with:

- Inductive charging.
- Magnetic stripe cards in an attached iPhone Leather Wallet.

Copyright © 2022 Apple Inc. All Rights Reserved.

27.2 MagSafe Accessory Magnet Array

Figure 27-6 MagSafe Accessory Magnet Array Options

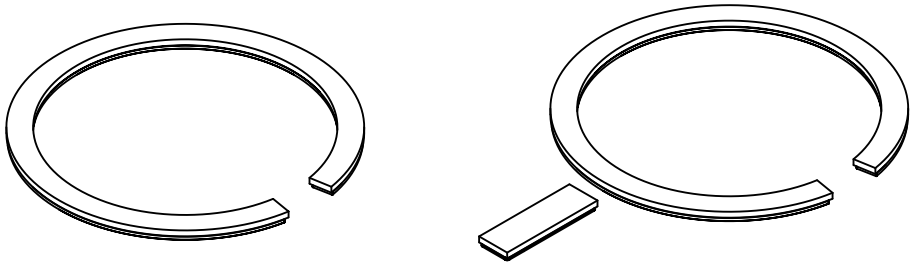

The MagSafe accessory magnet array shall be implemented as a Magnet Ring (page 126). The magnet ring enables the device and accessory to be attached in any orientation. To support a specific orientation, the accessory may include an Orientation Magnet (page 128) as part of the array.

27.2.1 Product Design

Accessories integrating the MagSafe accessory magnet array shall not enclose the device.

27.2.2 Mechanical

The accessory shall not interfere with or cause Scratches and Damage (page 22) to the device.

To avoid interference with devices, accessories shall:

- Not exceed 30 mm from the center of the magnet ring surface towards the top edge of the device for all supported device orientations. If the device can be attached in any orientation, the accessory shall not exceed 30 mm in radius around the center of the magnet ring surface.
- Maintain a clearance of 5 mm from the back of the device (mating surface) for any part of the accessory past the 30 mm keep-in constraint.
- Stay within the MagSafe Accessory Enclosure Geometry (page 132).

2022-07-08 | Copyright © 2022 Apple Inc. All Rights Reserved.

Figure 27-7 MagSafe Accessory Clearance

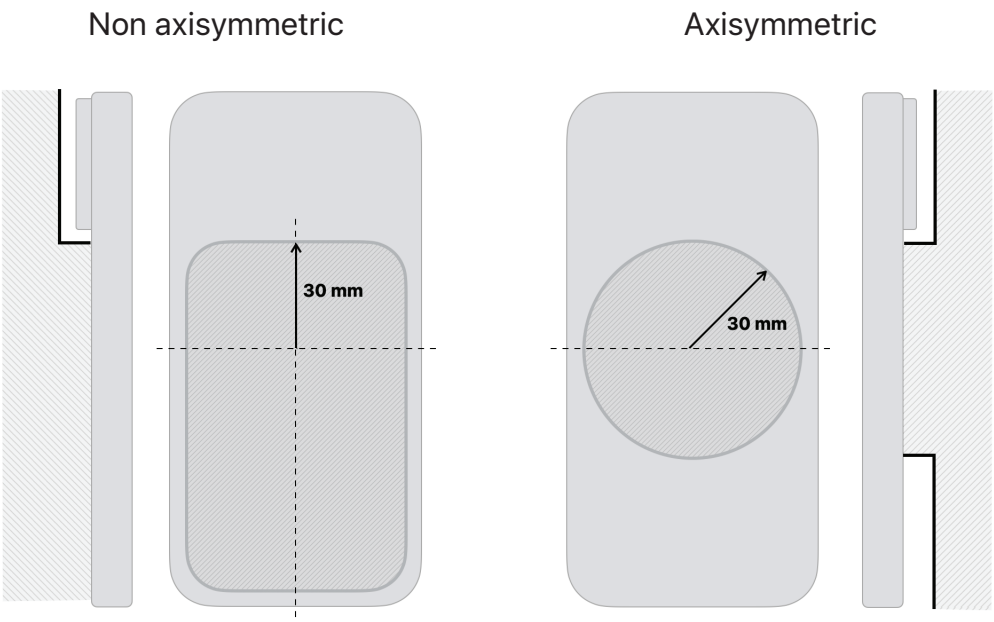

All magnets that are part of the MagSafe accessory magnet array shall be positioned in the same plane.

The MagSafe accessory's Magnet Ring (page 126) shall magnetically self align to the device's magnet ring within a 1.55 mm radial maximum.

27.2.2.1 Magnets

All MagSafe accessory magnets shall be N48H NdFeB with a 7 µm - 13 µm NiCuNi plating finish (or similar) and shall meet the requirements in Table 27-7 (page 126).

Table 27-7 Magnet Properties

Property	Minimum	Maximum
Br	13.7 kGs	14.1 kGs
Hcb	13.25 kOe	
Hcj	17 kOe	
BHmax	45 MGOe	48 MGOe

27.2.2.2 Magnet Ring

The magnet ring shall be positioned in the accessory in compliance with the dimensions and polarity requirements in Figure 27-8 (page 127) and Figure 27-9 (page 128).

Copyright © 2022 Apple Inc. All Rights Reserved.

Figure 27-8 MagSafe Magnet Ring Dimensions

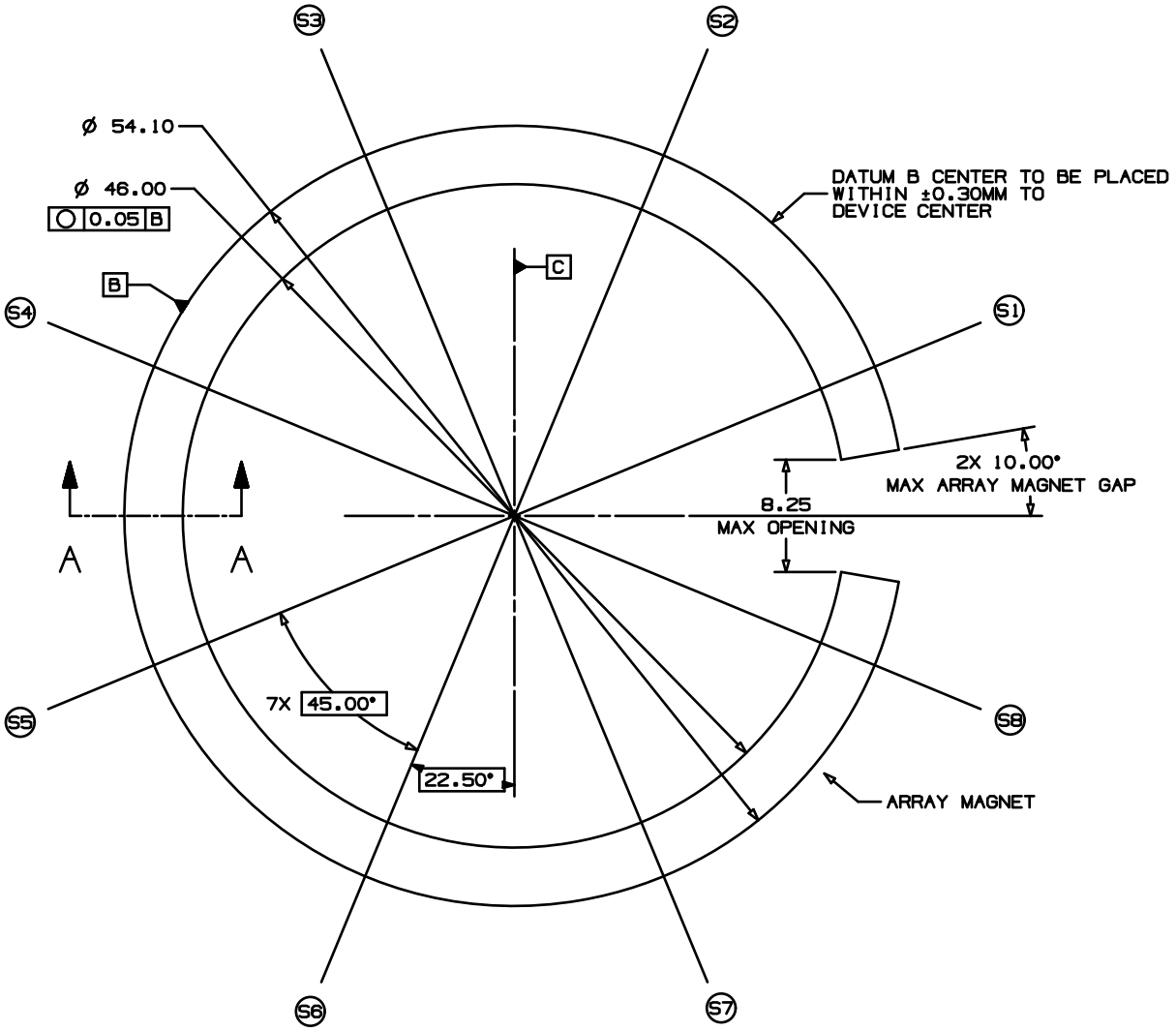

Copyright © 2022 Apple Inc. All Rights Reserved.

Figure 27-9 MagSafe Magnet Ring Dimensions and Polarity

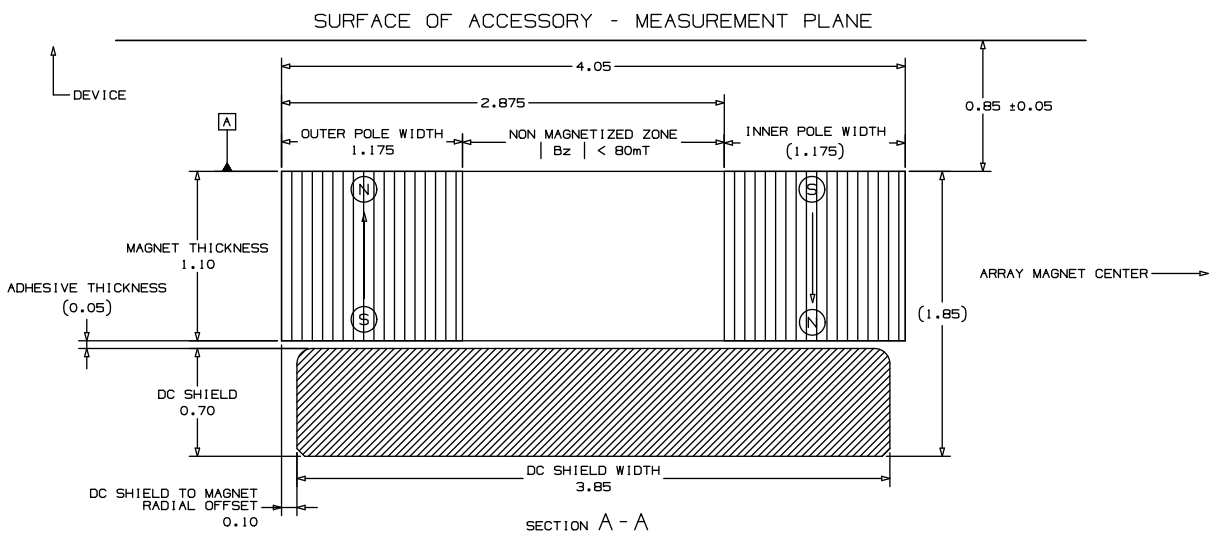

See DC Shield (page 131) for additional requirements of the DC shield specified in Figure 27-9 (page 128).

The flux density of a MagSafe accessory magnet ring shall comply with Table 27-8 (page 128) across the 8 lines (S1 - S8) in Figure 27-8 (page 127).

Table 27-8 Flux density at 0.85 mm from magnet ring surface

Minimum r	Maximum r	Minimum Bz	Maximum Bz	Minimum Bxy	Maximum Bxy
0 mm	19.5 mm	-0.025 T	0.025 T		0.025 T
19.5 mm	23 mm				0.075 T
23 mm	24.5 mm	-0.215 T	-0.155 T		
24.5 mm	25.5 mm			0.170 T	0.215 T
25.5 mm	27 mm	0.155 T	0.215 T		
27 mm	30 mm				0.075 T
30 mm		-0.025 T	0.025 T		0.025 T

27.2.2.3 Orientation Magnet

If orientation magnets are included, they shall be positioned according to Figure 27-10 (page 129) and Figure 27-11 (page 130).

Copyright © 2022 Apple Inc. All Rights Reserved.

Figure 27-10 MagSafe Orientation Magnet Dimensions

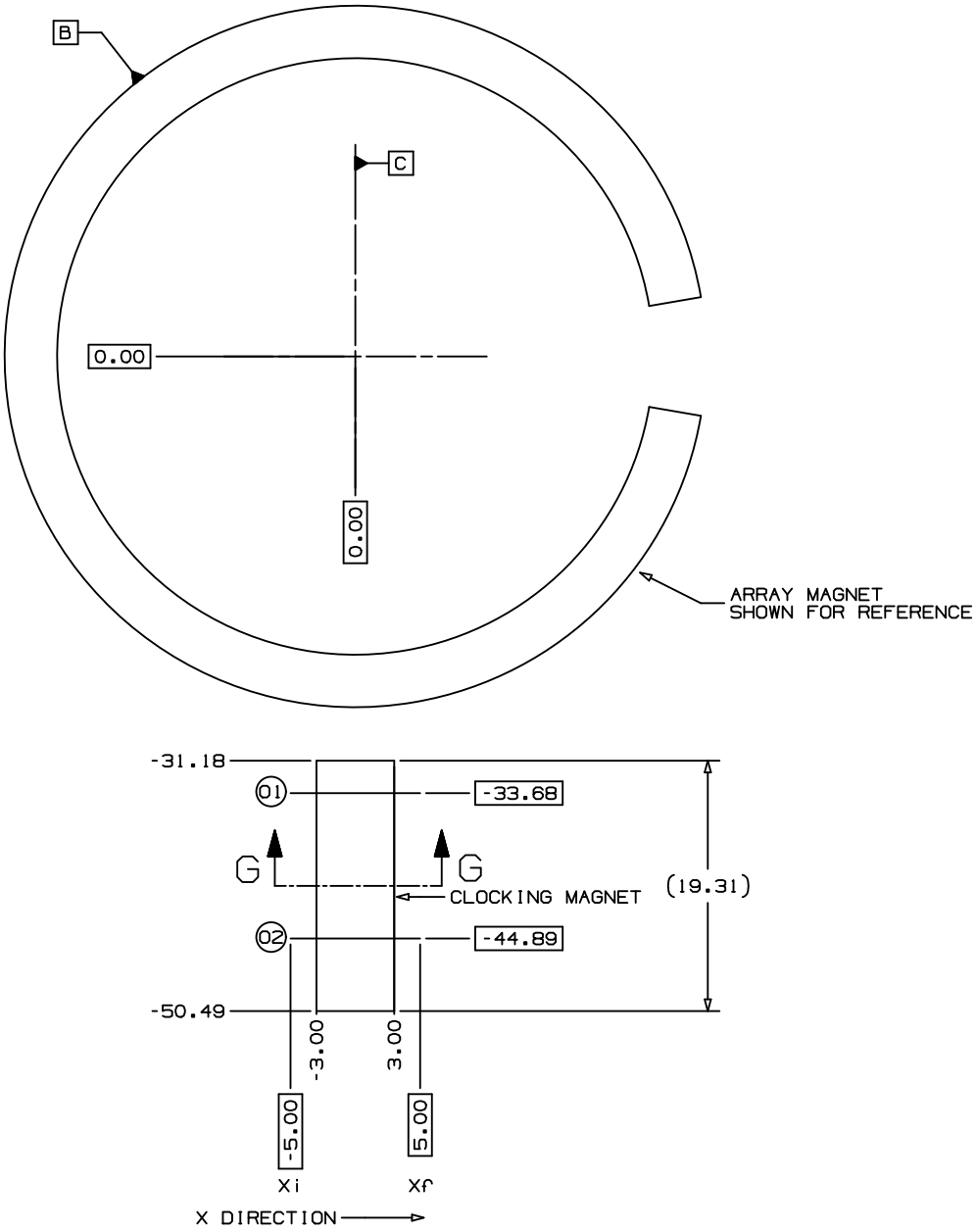

Copyright © 2022 Apple Inc. All Rights Reserved.

Figure 27-11 MagSafe Orientation Magnet Dimensions and Polarity

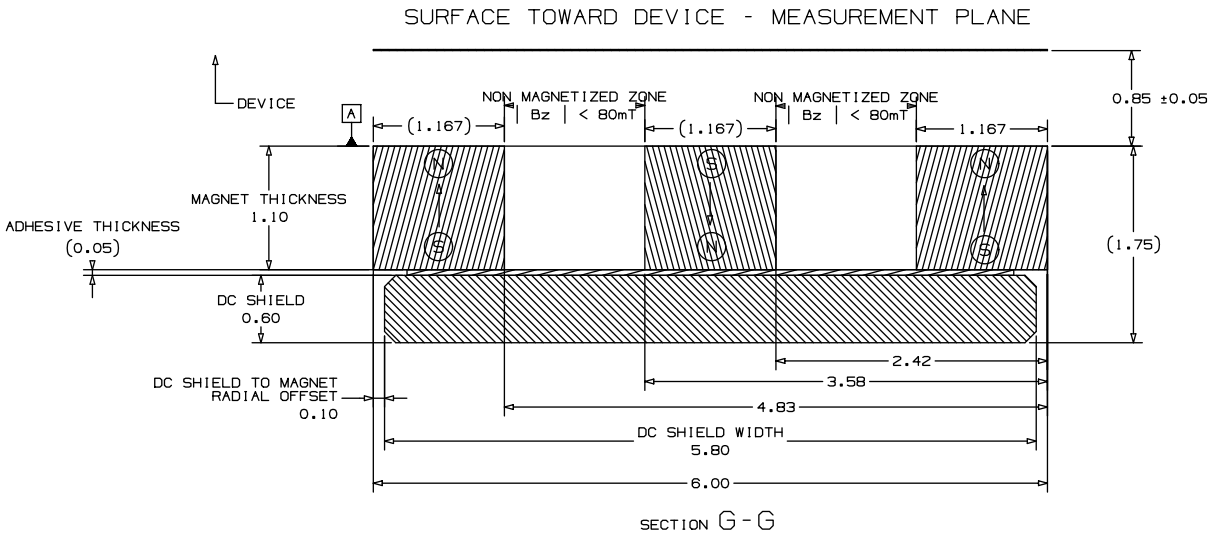

See DC Shield (page 131) for additional requirements of the DC shield specified in Figure 27-11 (page 130).

The flux density of a MagSafe accessory orientation magnet shall comply with Table 27-9 (page 130) across the 2 lines (O1 and O2) in Figure 27-10 (page 129).

Table 27-9 Flux density at 0.85 mm from orientation magnet surface

Minimum x	Maximum x	Minimum Bz	Maximum Bz	Minimum Bxy	Maximum Bxy
	-5.0 mm	-0.025 T	0.025 T		0.025 T
-5.0 mm	-4.5 mm	-0.025 T	0.025 T		
-4.5 mm	-3.0 mm			0.0625 T	0.0875 T
-3.0 mm	-2.0 mm	0.145 T	0.195 T		
-2.0 mm	-0.5 mm			0.165 T	0.215 T
-0.5 mm	0.5 mm	-0.250 T	-0.185 T		
0.5 mm	2.0 mm			0.165 T	0.215 T
2.0 mm	3.0 mm	0.145 T	0.195 T		
3.0 mm	4.0 mm			0.0625 T	0.0875 T
4.0 mm	5.0 mm	-0.025 T	0.025 T		
5.0 mm		-0.025 T	0.025 T		0.025 T

2022-07-08 | Copyright © 2022 Apple Inc. All Rights Reserved.

27.2.2.4 Magnetic Force

The force normal to the back of the device that is needed to dislodge the MagSafe accessory shall meet the requirements in Table 27-10 (page 131).

Table 27-10 Magnetic force

Scenario	Minimum	Maximum
Accessory attached to device	650 gf	900 gf

27.2.2.5 DC Shield

The DC shield shall be low carbon steel (1010, DT4 or similar), per ASTM848, with a 5 µm - 10 µm Ni plating finish or similar.

The DC shield shall have a saturation flux density (B_{sat}) of at least 2.0 T.

2022-07-08 | Copyright © 2022 Apple Inc. All Rights Reserved.

27.3 MagSafe Accessory Enclosure Geometry

REV	ECO#	DESCRIPTION OF REVISION

NOTES: (UNLESS OTHERWISE SPECIFIED)

1. SPLINE REPRESENTS MAX MATERIAL CONDITION FOR AN EXTERIOR PRODUCT SURFACE. MAGSAFE COMPATIBLE ACCESSORIES SHALL STAY WITHIN THE PROVIDED SPLINE.
2. FOR NON AXISYMMETRIC APPLICATIONS, SPLINE REPRESENTS MAX MATERIAL CONDITION WHEN VIEWED ALONG X AXIS
3. FOR AXISYMMETRIC APPLICATIONS, A REVOLUTION OF THE SPLINE AROUND THE Z AXIS THROUGH THE CENTER POINT OF THE MAGNET ARRAY REPRESENTS THE MAX MATERIAL CONDITION

[4] ANY CURVATURE DEVIATING BEYOND SPLINE TO EXIST BEYOND 5MM Z CLEARANCE FROM TOP OF PRODUCT

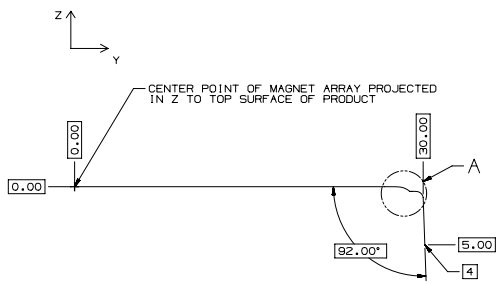

SIDE VIEW PROJECTION OF POSTIVE Y PRODUCT EDGE (CUT IN X AT MAGNET ARRAY CENTER POINT)

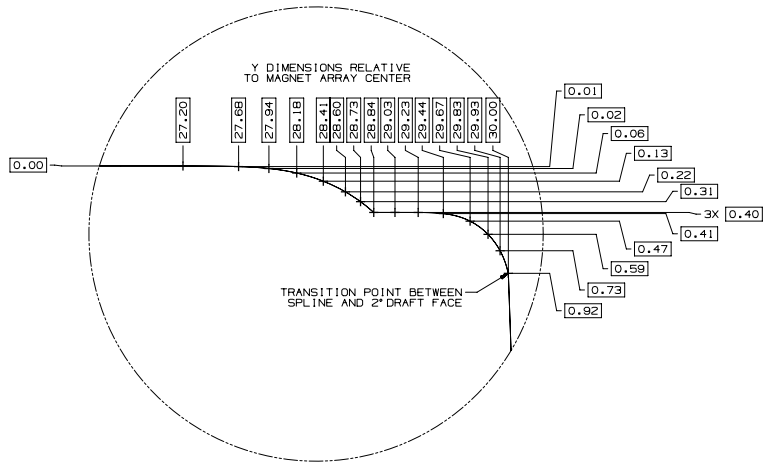

DETAIL A

SCALE 50:1

METRIC	Apple Inc.
DRAWTER APPLE / DATE	NOTICE OF PROPRIETARY PROPERTY: THE INFORMATION CONTAINED HEREIN IS THE PROPRIETARY PROPERTY OF APPLE INC. THE POSSESSOR AGREES TO THE FOLLOWING: (i) TO MAINTAIN THIS DOCUMENT IN CONFIDENCE (ii) NOT TO REPRODUCE OR COPY IT (iii) NOT TO MAKE USE OF OR PUBLISH IT IN WHOLE OR PART (iv) ALL RIGHTS RESERVED
DESIGNER APPLE / DATE	
DIMENSIONS ARE IN MILLIMETERS TOLERANCES	TITLE: MAGSAFE COMPATIBLE ENCLOSURE GEOMETRY
DO NOT SCALE DRAWINGS	DRAWING NUMBER / REV. 01
THIRD ANGLE PROJECTION / SIZE D	SCALE NONE / SHT 1 OF 1

NX GENERATED

27.4 Test Procedures

27.4.1 MagSafe Case Magnet Array

27.4.1.1 Case Thickness

27.4.1.1.1 Equipment

- Digital thickness gauge, such as the Mitutoyo 547-520S.

27.4.1.1.2 Procedure

1. Using the digital thickness gauge, verify the thickness is less than or equal to 2.1 mm at:
   - 4 points along the magnet ring.
   - 2 points along the orientation magnet.

27.4.1.2 Accessory Clearance

27.4.1.2.1 Equipment

- MagSafe-capable device.
- Apple MagSafe Battery Pack.

27.4.1.2.2 Procedure

1. Attach the case to the device.
2. Attach the Apple MagSafe Battery Pack to the back of the case.
3. Verify the case does not interfere with the Apple MagSafe Battery Pack and only the mating surface is in contact.

27.4.1.3 Magnetic Force

27.4.1.3.1 Equipment

- MagSafe-capable device.
- Apple MagSafe Charger with a non-magnetic eyelet screw glued firmly to its back. Pulling on the eyelet should exert a force on the center of the charger.
- Digital force gauge capable of capturing peak values, such as the Chatillon DFX II.
- Hook attachment for digital force gauge.
- Clamps.

2022-07-08 | Copyright © 2022 Apple Inc. All Rights Reserved.

27.4.1.3.2 Procedure

1. Attach the case to the device.
2. Place the device on a flat level surface with the display facing down and clamp it firmly in place. See Figure 27-12 (page 135).
3. Repeat the following steps 5 times:
   a. Attach the modified Apple MagSafe Charger to the back of the case, allowing the Apple MagSafe Charger to magnetically align.
   b. Connect the force gauge hook to the eyelet. See Figure 27-12 (page 135).
   c. Reset the force gauge's peak force value.
   d. Pull the force gauge vertically until the Apple MagSafe Charger and eyelet assembly dislodge from the case.
   e. Note the peak force value displayed on the force gauge.
4. Calculate the average of the 5 peak force measurements.
5. Verify the average force is within the range of 800 gf to 1100 gf.

2022-07-08 | Copyright © 2022 Apple Inc. All Rights Reserved.

Figure 27-12 Magnetic Force Test Setup

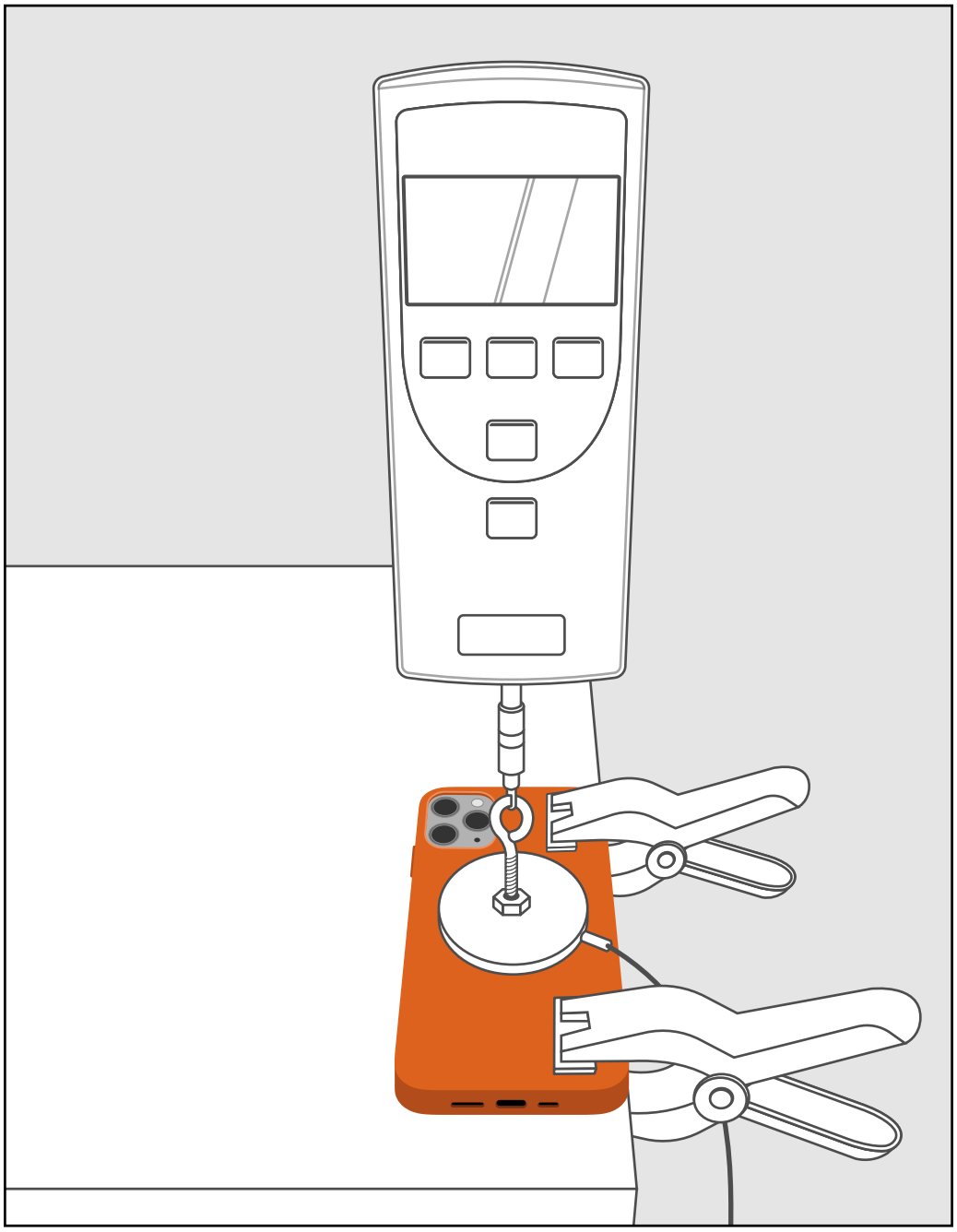

27.4.1.4 iPhone Leather Wallet Detection

27.4.1.4.1 Equipment

- MagSafe-capable device.

Copyright © 2022 Apple Inc. All Rights Reserved.

- iPhone Leather Wallet.

27.4.1.4.2 Procedure

1. Attach the case to the device.
2. Attach the iPhone Leather Wallet to the back of the case.
3. Verify the device displays the iPhone Leather Wallet animation.

27.4.1.5 Magnetic Stripe Cards in iPhone Leather Wallet

27.4.1.5.1 Equipment

- MagSafe-capable device.
- iPhone Leather Wallet.
- Low Coercivity Magnetic stripe (LoCo) cards, such as cards from the following vendors:
  - American Card Service.
  - Allsafe.
  - CI Solutions.
  - PSA.
- LoCo card reader/writer, such as:
  - Q-card Mag3x.
  - Magtek InSpec 9000.
  - Misiri X6BT.
  - Deftun MSR605X.

27.4.1.5.2 Procedure

1. Attach the accessory to the device.
2. Repeat this procedure for three different brands of LoCo cards:
   a. Write to the LoCo card and confirm readability.
   b. Insert the LoCo card into the iPhone Leather Wallet with the magnetic stripe facing the magnets of the iPhone Leather Wallet.
   c. Place additional cards into the pocket to ensure a LoCo card is in contact with the magnet side of the iPhone Leather Wallet.
   d. Attach the iPhone Leather Wallet to the accessory (attached to the device).
   e. Wait 10 seconds.
   f. Remove the iPhone Leather Wallet from the accessory.
   g. Remove the LoCo card from the iPhone Leather Wallet.
   h. Verify the LoCo card can be read and it displays the correct information.

2022-07-08 | Copyright © 2022 Apple Inc. All Rights Reserved.

28. Media Library Access

The Media Library feature allows accessories to download the metadata contents of a device's media libraries (not the media items themselves) and request playback of media items. The feature is divided into the following sub-features:

- Media Library Information informs the accessory about media libraries available on the device.
- Media Library Updates provide an accessory with an updated view of the contents of a particular media library.
- Media Library Playback allows the accessory to request playback of one or more items from a media library.

See the Accessory Interface Specification (page 19) for more information.

2022-07-08 | Copyright © 2022 Apple Inc. All Rights Reserved.

29. Now Playing Updates

The Now Playing feature enables an accessory to display information about the current "Now Playing" media source and media item on a device. Media sources include both the built-in Apple Music and Apple Video apps on devices and certain third-party iOS apps supporting the generation of Now Playing metadata, see *MPNowPlayingInfoCenter* in the iOS SDK documentation. Accessories shall be prepared for the Now Playing media source and media item to change at any time, whether the accessory requested the change or not.

See the Accessory Interface Specification (page 19) for more information.

Copyright © 2022 Apple Inc. All Rights Reserved.

30. Out-of-Band Bluetooth Pairing

Accessories with the ability to connect to a device using Bluetooth and a wired transport should use the Out-of-Band Bluetooth Pairing feature to simplify Bluetooth connection setup.

For example, Lightning to USB charge/sync cables or Lightning to USB accessory cables can be used to exchange Bluetooth pairing information upon initial connection. This may reduce or eliminate the need for instruction manuals to describe how to:

- Put the accessory into a discoverable and pairable mode.
- Initiate Bluetooth pairing on the device using the Settings app.
- Download the accessory's companion app and initiate pairing from the app.

See the Accessory Interface Specification (page 19) for more information.

2022-07-08 | Copyright © 2022 Apple Inc. All Rights Reserved.

31. Siri

Siri enables a user to have rich interactions with a device by primarily using their voice.

Accessories supporting Siri shall not use an icon resembling the Siri microphone icon.

The rest of this chapter is applicable to accessories supporting Siri over Bluetooth using HFP commands.

To support Siri using other transports and protocols, the accessory developer shall be a member of the Apple MFi Licensing Program (page 20).

31.1 Enabling Custom Siri Commands

Every accessory supporting Siri over Bluetooth using HFP commands shall support HFP Command AT+XAPL (page 100). The device will use the information sent by this command to enable and disable custom commands related to Siri.

To receive Siri status events, the accessory shall send the `AT+XAPL` command after making a successful HFP Service Level Connection (SLC) to the device. The accessory should send an `AT+XAPL` command first, before sending any of the additional Siri-specific commands described below.

31.2 Obtaining Siri Availability Information

After establishing an HFP profile connection, an accessory can determine if Siri is available and enabled on a device. It can also receive notifications of changes in Siri status. If Siri is disabled, Voice Control will be activated instead.

31.2.1 Obtaining Status Information at Connection

The accessory should send the following command after making a successful HFP profile (SLC) connection and sending an `AT+XAPL` command.

31.2.1.1 HFP Command AT+APLSIRI?

Description: AT command to retrieve Siri status information.

Copyright © 2022 Apple Inc. All Rights Reserved.

Initiator: accessory

Format: `AT+APLSIRI?`

Response: `+APLSIRI:` *value*

Defined Values:
- 0 = Siri is not available on this platform.
- 1 = Siri is available and enabled.
- 2 = Siri is available but not enabled.

Example: `+APLSIRI:1` (Siri is available and enabled)

31.2.2 Receiving Siri Availability Updates from the Device

After initialization has been completed, the device will send the accessory the following notification if there is a change in Siri status. This notification will be provided only if the accessory has requested Siri status (by sending `AT+APLSIRI?`) at least once after connection, and if the device has reported that Siri is available and enabled.

31.2.2.1 HFP Command +APLSIRI

Description: Unsolicited event indicating a change in Siri status.

Initiator: Device

Format: `+APLSIRI:` *value*

Defined Values:
- 1 = Siri is available and enabled.
- 2 = Siri is available but not enabled.

Example: `+APLSIRI:2` (Siri is available but not enabled)

2022-07-08 | Copyright © 2022 Apple Inc. All Rights Reserved.

Figure 31-1 Siri is Disabled/Enabled from the Device's Settings

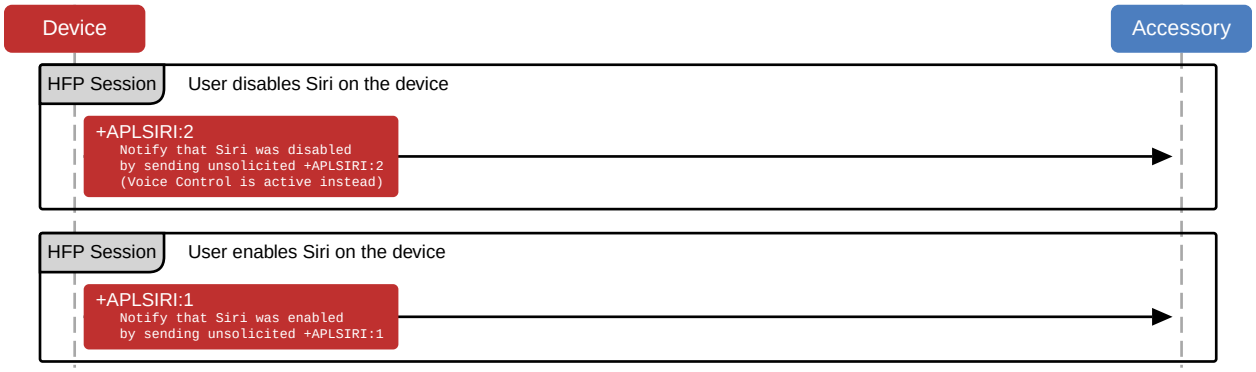

31.3 Initiating a Siri Session

Once support for Siri is established on both the accessory and the device, a Siri session can be started from either one.

31.3.1 Initiating a Session from the Accessory

The accessory should only initiate a Siri session as a result of a direct user action.

The accessory shall use the voice recognition command `AT+BVRA` defined in the Bluetooth *Hands-Free Profile* specification (*Hands-Free Profile* 1.6 profile specification, section 4.25) to initiate a Siri session.

The HFP profile shall be connected and SLC shall exist.

The accessory should use the following command sequence:

- The accessory sends an `AT+BVRA=1` command to the device.
- The device sends an `OK` response.
- The device launches a Siri session and creates a Synchronous Connection (SCO) for the audio.
- If the Siri session is not finished, the accessory shall send `AT+BVRA=1` to continue the conversation. This may need to happen multiple times.
- When the Siri session is finished, the device sends a `+BVRA:0` result code to the accessory.
- The device disconnects the SCO connection.

While a Siri session is active, the accessory shall let the user continue the conversation and ask follow up questions within the current context. In order to do so, the accessory shall be able to send an `AT+BVRA=1` command to the device even after Siri has been already activated and before `+BVRA:0`

Copyright © 2022 Apple Inc. All Rights Reserved.

is received. Figure 31-2 (page 143) shows an overview of the interaction when Siri is triggered from the accessory, the running session was continued twice and once Siri was finished, the device dismissed the session.

Figure 31-2 Initiating a Siri Session from the Accessory

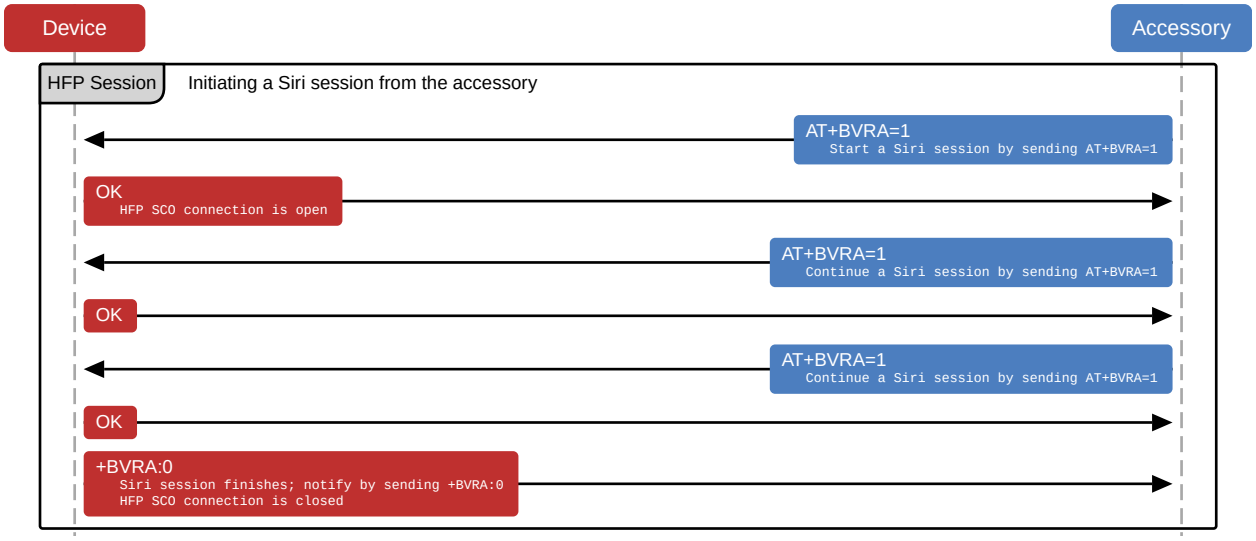

31.3.2 Initiating a Session from the Device

If the accessory supports voice recognition commands, the device sends a +BVRA event to indicate the start of a Siri session. The accessory shall enable support for voice recognition and indicate it in its feature response as described in the Bluetooth *Hands-Free Profile* 1.6 specification, section 4.34.1, "Bluetooth Defined AT Capabilities." Specifically, the HFP profile shall be connected, SLC shall exist, and voice recognition activation (bit 3) shall be enabled in the AT+BRSF command. The device will not use virtual call functionality for the Siri session if voice recognition activation is supported by the accessory.

The accessory should expect the following command sequence:

- The device sends a +BVRA:1 event to the accessory.
- The device launches a Siri session and creates a SCO connection for the audio.
- When the Siri session is finished, the device sends a +BVRA:0 result code to the accessory.
- The device disconnects the SCO connection.

2022-07-08 | Copyright © 2022 Apple Inc. All Rights Reserved.

Figure 31-3 Initiating a Siri Session from the Device

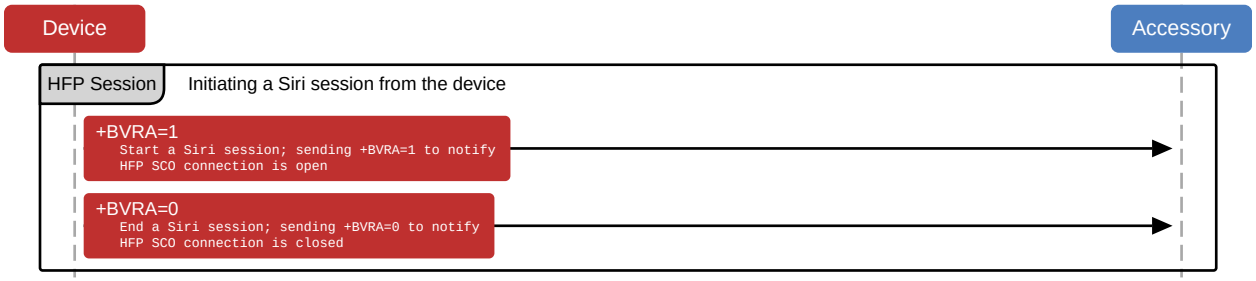

31.3.3 Ending a Session from the Accessory

Once a Siri session is running the accessory shall be capable of ending the session by sending an `AT+BVRA=0` command to the device. Figure 31-4 (page 144) shows an example of ending a running Siri session from the accessory. The accessory should only end an active session as a result of a direct user action.

Figure 31-4 Ending a Siri Session from the Accessory

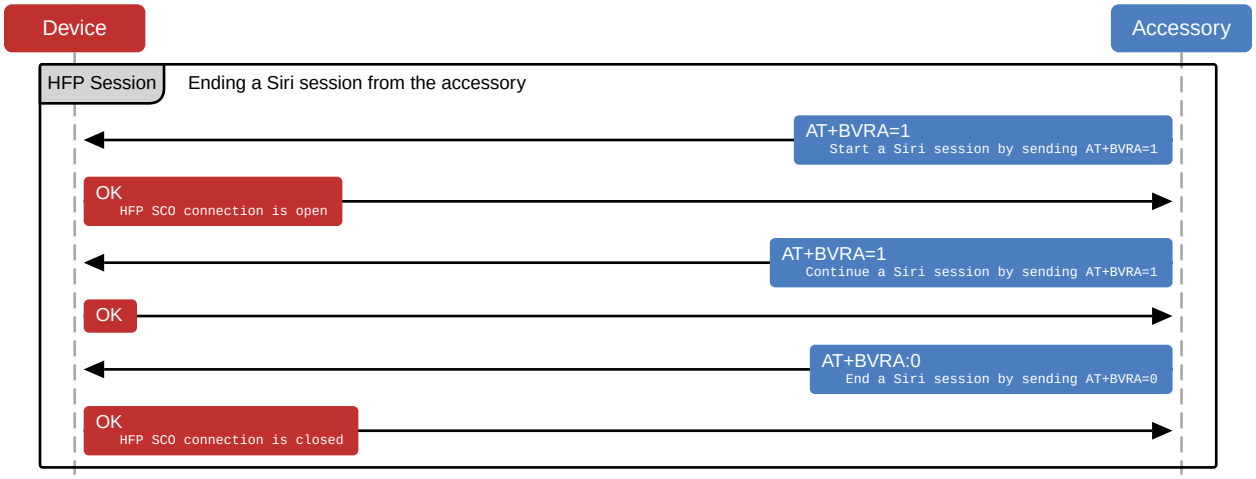

31.4 Siri Eyes Free Mode

Siri Eyes Free mode is a feature to control Siri responses including display information and can be enabled or disabled as needed. In Siri Eyes Free mode, the user experience is tailored towards a driving scenario and interactions with Siri are done primarily using voice to minimize the need for the user to

Copyright © 2022 Apple Inc. All Rights Reserved.

look at a screen. Siri Eyes Free mode is supported only for Bluetooth-enabled vehicle entertainment systems and should not be used by any other accessories. Siri Eyes Free should not be triggered using a voice command.

The device will listen for the HFP AT command `AT+APLEFM` to enable or disable Siri Eyes Free mode.

This command is used by the device to modify Siri responses containing visual information or requiring user interaction. Suitable audio feedback and voice commands will be available to the user based on the initiated Siri use case.

Siri Eyes Free mode is disabled by default. Once the accessory has enabled Siri Eyes Free mode, it remains enabled for all subsequent Siri sessions initiated from the accessory until the accessory disables it or the Bluetooth connection is disconnected.

31.4.1 HFP Command AT+APLEFM

Description: An accessory sends this command to notify a device of the preferred state of Siri Eyes Free mode.

Initiator: accessory

Format: `AT+APLEFM=`*value*

Response: `OK`

Defined Values:
- `0x00` = Disable Siri Eyes Free mode.
- `0x01` = Enable Siri Eyes Free mode.
- `0x02-0xFF` = reserved

Example: `AT+APLEFM=1`

31.5 Improving Voice Recognition

The microphone audio an accessory sends to the device during a Siri session should be suitable for voice recognition. Audio requirements for optimal voice recognition may differ from requirements for optimal human perception (for example, during a cellular phone call).

Filtering of the audio signal to remove echoes or feedback noise is acceptable.

To provide the best possible audio quality as Siri input, the accessory shall observe the following recommendations:

2022-07-08 | Copyright © 2022 Apple Inc. All Rights Reserved.

- **Echo cancellation and noise suppression (EC/NR)**: Directional microphones and linear beamforming with microphone arrays giving improved SNR are recommended. Linear echo cancellation for reducing unwanted audio sources (such as audio output from the system) without having any other effect on the speech signal are also recommended. However, single channel noise reduction methods (such as spectrum subtraction) shall not be applied, as they will be detrimental to the speech recognition accuracy. Similarly, automatic gain control, residual echo suppression and attempts to blank out non-speech periods in the waveform shall not be applied.
- **Signal gain**: When adjusting signal levels, the accessory shall avoid artifacts, dropouts, and clipping in all circumstances. Automatic Gain Control is not recommended. If the accessory adjusts signal gain, the gain should be held constant across each spoken utterance. The nominal level measured at the uplink output of the accessory should be A-weighted -30 dB ±2 dB root-mean-square (RMS), expressed in units relative to full-scale (dBFS(A)). Alternatively, the nominal level may be 13 dB ±2 dB SLR if using the ITU measurement procedure.
- **Signal-to-noise ratio (SNR)**: The average SNR should be greater than 20 dB. Below 20 dB, recognition rates will be impacted.
- **Reverberation**: An RT60 time less than 200 ms should be maintained.

31.5.1 Wide Band Speech Support

An accessory using Siri should support 16 kHz wide band speech audio for better audio quality and voice recognition performance. See the Bluetooth *Hands-Free Profile* 1.6 specification for details about wide band speech audio. Narrow band audio signal (8 kHz) is supported but not recommended.

31.6 Optimizing the Siri Experience

The start of a Siri session should not be accompanied by local beeps or verbal indications (such as an announcement of "...voice dialing...") from the accessory. When a Siri session becomes active, the device sends two beeps indicating that Siri is ready to receive instructions. Adding extra audible notifications only inserts delays in the system.

The accessory should wait for the device to end each Siri session.

The accessory should not send an `AT+BVRA=0` command unless it is prompted to do so by user interaction.

The accessory should be capable of rendering audio within 200 ms of SCO connection activation to ensure that the user always hears the Siri introductory beeps.

2022-07-08 | Copyright © 2022 Apple Inc. All Rights Reserved.

31.7 Common Siri Applications

Siri can send messages, find points of interests, place phone calls, and much more. As Siri capabilities are constantly growing, additional use cases may become available after the initial integration. In Siri Eyes Free mode, some of these use cases may not be accessible as the user experience is tailored towards a driving scenario.

31.7.1 Initialization Procedure After Connection is Established

Figure 31-5 (page 147) outlines the sequence the accessory has to trigger to be able to use Siri on a device. After establishing an HFP profile connection, the accessory shall first enable the custom Siri commands by sending `AT+XAPL` and provide the features it supports. After a confirmation is received from the device, the accessory should determine Siri's availability with `AT+APLSIRI?`.

Vehicles with Bluetooth-enabled infotainment systems can also enable Siri Eyes Free Mode during initialization. This is detailed in Figure 31-6 (page 148).

Figure 31-5 Siri Initialization Procedure

Figure 31-6 Siri Initialization Procedure with Siri Eyes Free

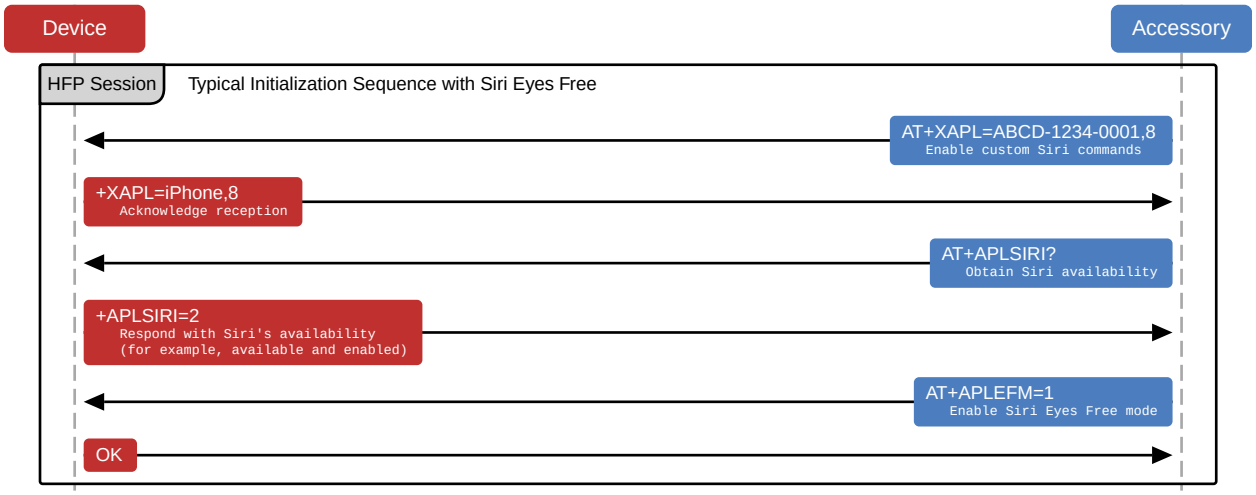

31.7.2 Phone Dialing Using Siri

Upon user request, Siri can initiate an outgoing phone call. The device will initiate HFP call signaling to establish a phone call as described in Bluetooth (page 174). The accessory shall be able to transition to Hands-Free dialing at any time during or after a Siri session when signaled by the device.

31.7.3 Audio Routing and Media Playback Using Siri

Siri can control the media playback on a device, and if Siri determines the user wants to play or pause music, Siri will either start, pause or resume media playback. The device will send a notification to the accessory indicating a change in playback state and any associated track information. The accessory shall respond to the notifications, start or stop the music playback as requested, as well as update the correct playback state (for example, shuffle, repeat).

The accessory shall not force a change in the playback state after a Siri session is ended. If music was playing before Siri was started, it shall continue playing, if it was paused, it shall remain paused.

After Siri starts music playback the accessory shall set its current audio route to match the audio source, depending on how audio is being received from the device (using Bluetooth or by a wired connection).

The available media playback notifications depend on the audio route being used:

- Bluetooth audio routes shall use the approach described in Notifications (page 181) and Audio Data Received using A2DP Profile (page 184).
- Wired audio routes shall use iAP2.

Copyright © 2022 Apple Inc. All Rights Reserved.

31.7.4 Turn-By-Turn Directions Using Siri

Siri can initiate active route guidance to provide turn-by-turn directions. In case the device is the active source and is already playing music, turn-by-turn directions will be mixed in as part of the audio stream. In case the device is not playing music, the accessory should be able to mix in turn-by-turn directions with the active audio source.

The device will notify the accessory to play turn-by-turn directions only over Bluetooth. Detailed information on how to distinguish between music playback and turn-by-turn notifications is available in Notifications (page 181).

31.8 User Interaction with Siri Eyes Free in a Vehicle

A vehicle using Siri Eyes Free mode shall integrate the Siri experience with the existing in-vehicle entertainment system and controls. The vehicle should provide a convenient interface to initiate, continue, and end a Siri session. Once a Siri session is running, the vehicle shall display a visual cue indicating voice recognition is in use. Figure 31-7 (page 150) outlines how a Siri interaction should be designed.

2022-07-08 | Copyright © 2022 Apple Inc. All Rights Reserved.

Figure 31-7 Siri Eyes Free User Interaction

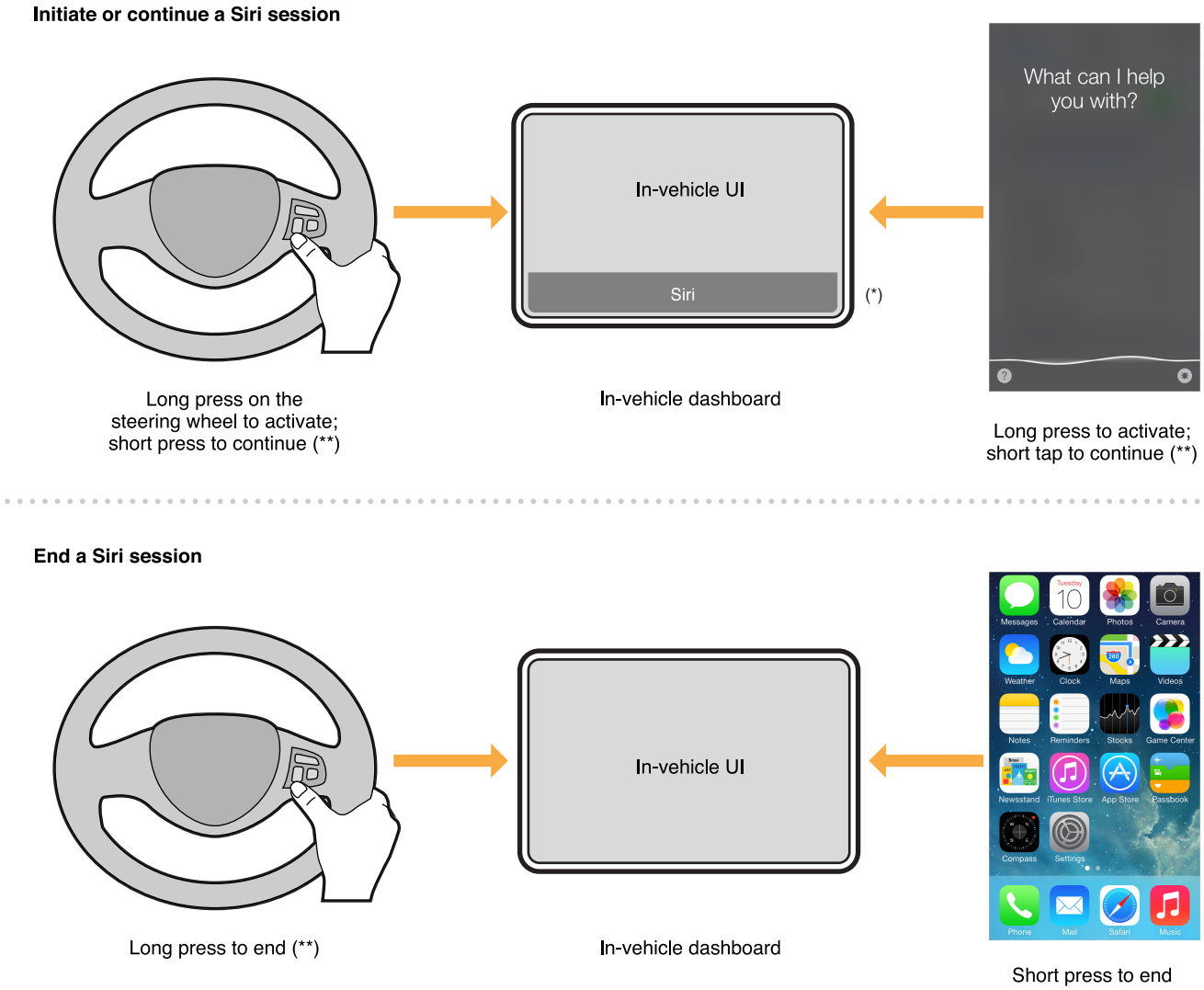

As shown in Figure 31-7 (page 150):

- (*) If the accessory wishes to indicate Siri is active, it shall do one of the following:
  - Display the word 'Siri' (as capitalized) with no additional text or icon.
  - Use generic text or icon not resembling the Siri microphone icon.
- (**) If the vehicle is equipped with steering wheel controls, the steering wheel shall have a dedicated button or a long-press action on a button to start, continue and end a Siri session. The button long-press shall be 600 ms or less. If no steering wheel controls are available, a soft button shall be available within the in-vehicle user interface to start, continue or end a Siri session.

Copyright © 2022 Apple Inc. All Rights Reserved.

When a vehicle enables Siri Eyes Free mode, the device will not display any onscreen Siri content. If the device was locked at the time the Siri session was activated from the vehicle, it will remain locked and the screen will not turn on. If the user unlocks or manually activates the device while in an Eyes Free Session there will be a notification the device is in an active Siri session but there will be no visual Siri content displayed.

31.9 Enabling/Disabling Siri from the Device

The user has the ability to disable or enable Siri from the Settings menu on the device. When Siri is disabled, Voice Control becomes the recognition engine on the device and will be triggered by default. The accessory may choose to either launch Voice Control with no further changes, in the same way Siri is launched as in Figure 31-8 (page 151) or display a warning message and not send an activation command to the device as in Figure 31-9 (page 152).

Figure 31-8 Siri is Deactivated - Launching Voice Control

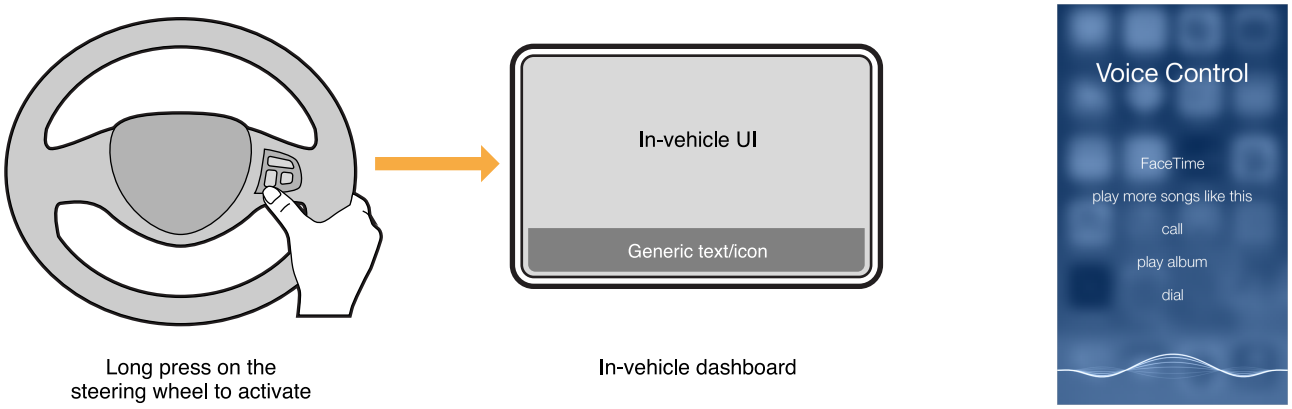

Figure 31-9 Siri is Deactivated - Displaying a Warning Message

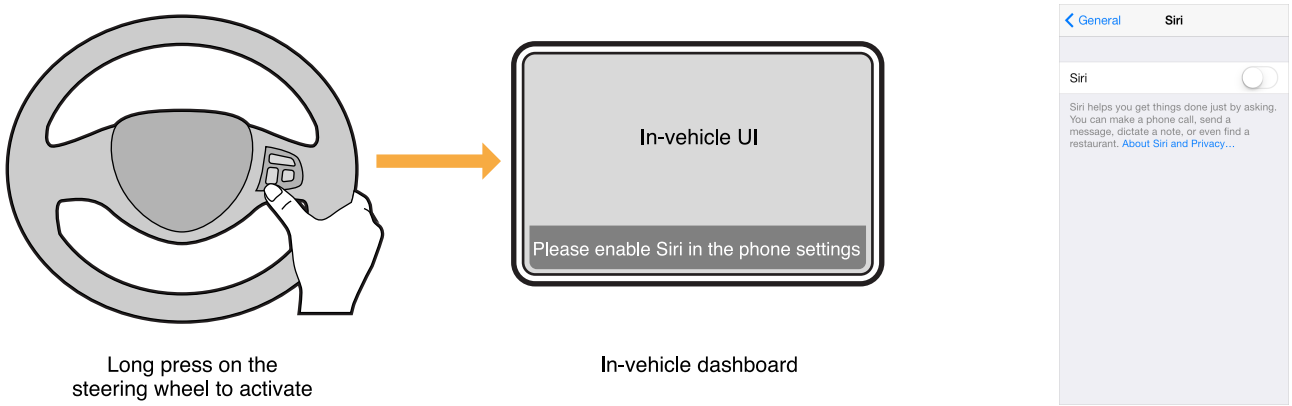

31.10 Test Procedures

31.10.1 Siri Eyes Free

The following test procedures are applicable to accessories interacting with Siri Eyes Free.

The speaker should be a native speaker of North American English. If the tester's native language is not North American English, set Siri to the speaker's native language and translate the provided phrases to that language.

31.10.1.1 General

1. Pair and establish a Bluetooth Handsfree Profile (HFP) connection between the iPhone and the head unit. Activate Siri from the vehicle steering wheel button (for example, by pressing and holding):
   a. Observe the iPhone screen remains inactive after a Siri session has started (a visual indicator will be visible on the device if the screen is activated manually).
   b. Ensure Siri's opening chime is heard completely through the vehicle speakers.
   c. Observe a visual notification in the in-car User Interface (UI) indicating a Siri session is active (for example, text notification, on-screen UI).
2. Activate Siri from the vehicle steering wheel button and say "Send a message to Peter. How are you?". While still saying the message, press the vehicle steering wheel button to cancel Siri:
   a. Ensure the iPhone screen remains inactive (if manually activated, the visual indicator on the phone will disappear).
   b. Verify the in-car Siri UI interaction is dismissed and the head unit returns to its prior state before the Siri interaction.

Copyright © 2022 Apple Inc. All Rights Reserved.

3. Activate Siri from the vehicle steering wheel button and say "How is the weather in San Francisco?". Wait for Siri to respond with the weather forecast. Once the weather forecast is complete, resume Siri from the vehicle steering wheel button and say "What about New York?":
   a. Confirm the visual indicator is still active on the phone.
   b. Listen for the Siri opening chime.
   c. The vehicle UI should indicate a Siri session is active.
   d. Verify Siri responds with the weather forecast for New York.
4. In case the vehicle UI offers on-screen controls to activate/cancel/resume Siri, repeat steps (1) to (3) for all on-screen controls.
5. Activate Siri from the steering wheel button and say "What's the time". Listen to the current time and do not interact with Siri or the iPhone. After 5 seconds have expired:
   a. Observe the visual Siri session indicator on the phone is no longer visible.
   b. The in-car UI for Siri interaction should be dismissed.
   c. The head unit should return to its prior state before the Siri interaction.
6. Listen to FM radio from the car speakers (for example, no A2DP streaming active). Press and hold the phone's Home button to activate Siri from the phone:
   a. Observe a visual notification in the in-car UI indicating a Siri session is active (textual notification, on-screen UI, etc.).
   b. Observe Siri's interaction on the phone's screen and ask "What's the time?"
   c. After Siri has responded, lock the phone again to dismiss the Siri session by pressing the phone's sleep/wake or side button.
7. On the phone go to Settings and turn Siri off. Activate Siri from the head unit. Observe one of the following depending on the actual implementation (a) Voice Control starts instead of Siri (b) The head unit displays a warning indicating Siri Eyes Free is not available.
8. On the phone go to Settings and turn Siri back on. Verify Siri can be activated/cancelled from the head unit and from the Home button on the phone.
9. Turn Bluetooth off using Settings on the phone. Verify Siri cannot be started.
10. Turn Bluetooth back on using Settings on the phone. Verify Bluetooth HFP profile reconnects and Siri can be activated/cancelled from the head unit and from the phone's Home button.
11. Confirm there is no accessory battery status level indicator icon displayed on the phone's status bar.

31.10.1.2 Siri Dialog

1. Activate Siri from the vehicle's steering wheel button and say "Send a text message to *insert contact name*". When Siri prompts for "what would you like it to say", dictate a short message. After Siri has read back the dictated message, say "Review it". After Siri has read back the message again, say "Review it" again. Repeat this cycle ~5 times to ensure that the head unit is able to handle a long interaction with Siri. At the end say "Send it" and verify the message is sent. Verify the opening

2022-07-08 | Copyright © 2022 Apple Inc. All Rights Reserved.

chime is audible and the message is sent. After the Siri session is closed, the audio playback should go back to the state it was in before Siri was activated (that is, if audio was paused it remains paused, if it was playing it resumes playing).

2. Start Siri from the vehicle's steering wheel button and ask for directions. Follow up through the dialog until the navigation is started. Verify the Siri session is closed and the audio playback goes back to the state it was in before Siri was activated (that is, if audio was paused it remains paused, if it was playing it resumes playing).
3. Start Siri from the vehicle's steering wheel button and say "Search the web for polar bears". Verify Siri Eyes Free mode is on and this use case is blocked by Siri. Note: In some implementations the vehicle has to be in motion before Siri Eyes Free is activated by the car kit.
4. Start Siri from the vehicle's steering wheel button and say "What is the current time in Munich?". After Siri answers but before ~5 seconds have elapsed, resume Siri (for example, using a short press on the steering wheel button) and verify Siri is activated again. Say "What about San Francisco?". Repeat (with a different city) and verify this can continue indefinitely as long as there is a short press on the steering wheel button within 5 seconds of the last response.

31.10.1.3 Bluetooth HFP A2DP Music

1. Establish a Bluetooth A2DP connection and switch to Bluetooth audio source on the head unit. Activate Siri and say "Next track". Verify the track advances and audio is played through the vehicle speakers. Verify the Siri in-car UI is dismissed and the head unit returns to its initial state.
2. Activate Siri and say "Pause the music". Verify audio remains paused after Siri has been dismissed. Verify the Siri in-car UI is dismissed and the head unit goes back to its initial state.
3. Pause music playback on the head unit (using AVRCP command). Activate Siri and ask "What time is it?". Verify the music playback remains paused after the Siri session has been dismissed. Verify the Siri in-car UI is dismissed and the head unit goes back to its initial state.
4. Switch to FM radio on the head unit. Activate Siri and say "Play me a song". Verify the head unit is able to automatically switch to Bluetooth audio and iPhone music starts playing. Verify the beginning of the selected track is heard (for example, there is no skipping of audio packets). Verify the Siri in-car UI is dismissed and the head unit returns to its initial state.
5. Activate Siri and say "Shuffle all songs". Verify the head unit correctly updates the NowPlaying track information. Verify the Siri in-car UI is dismissed and the head unit returns to its initial state.
6. Activate Siri and ask to play a specific artist or title. Verify the Siri session is dismissed after the music starts. Confirm the correct metadata is displayed on the screen. Verify the Siri in-car UI is dismissed and the head unit returns to its initial state.

31.10.1.4 Call

1. Activate Siri and call a contact with more than one phone number (for example, home and mobile). Wait for Siri's response asking which phone number to call. Answer with "home". Verify call transition is handled correctly by the head unit and any Siri UI displayed on the vehicle screen is dismissed.

2022-07-08 | Copyright © 2022 Apple Inc. All Rights Reserved.

2. While iPhone music is playing, activate Siri and say "Call *(insert contact to call)*". Verify call transition is handled correctly by the head unit. Verify iPhone music playback resumes after the call has been answered and terminated on the far end. Verify the Siri in-car UI is dismissed and the head unit returns to its initial state.
3. While iPhone music is playing, start Siri and say "Call *(insert contact to call)*". Verify call transition is handled correctly by the head unit. Verify iPhone music playback resumes after the call has been answered and terminated on the near end (that is, on the head unit). Verify the Siri in-car UI is dismissed and the head unit returns to its initial state.
4. While in a Siri session, receive an incoming call on the head unit. Verify the head unit handles call-signaling correctly and transitions to the phone UI once the call has been accepted. Verify the Siri in-car UI is dismissed and the head unit returns to its initial state.

31.10.1.5 Bluetooth + Wired iAP2

1. Connect the device to the head unit using a Lightning connector (iPhone 5). Switch to iPod music and verify audio is playing. Activate Siri and say "Next track". Verify the track advances and the head unit displays the track metadata correctly. Verify the Siri in-car UI is dismissed and the head unit returns to its initial state.
2. From the head unit UI, select a playlist with a single song and start playing it. Start Siri from the vehicle steering wheel and say "Play ..... *make sure to select a song to play that is (a) not in the same album as the single-track playlist and (b) not song track index 0 of its album*". Verify the new song starts playing and the head unit correctly displays the track metadata for the new song. Verify the Siri in-car UI is dismissed and the head unit returns to its initial state.
3. Turn Shuffle off on the head unit UI. Then start Siri and say "Shuffle all songs". Verify the shuffle indicator on the head unit UI is updated and the correct track metadata for the new now playing song is displayed correctly. Verify the Siri in-car UI is dismissed and the head unit returns to its initial state.
4. Switch to FM radio on the head unit. Activate Siri and say "Play me a song". Verify the head unit is able to automatically switch to iPOD audio source and iPOD audio starts playing through the speakers. Verify there is no skipping of audio at the beginning of the selected track. Verify the Siri in-car UI is dismissed and the head unit returns to its initial state.
5. Pause music playback on the head unit (using iAP2 commands). Activate Siri and ask "What time is it?". Verify music playback remains paused after the Siri session has been dismissed. Verify the Siri in-car UI is dismissed and the head unit returns to its initial state.
6. While iPhone music is playing, start Siri and say "Call *(insert contact to call)*". Verify call transition is handled correctly by the head unit. Verify iPhone music playback resumes after the call has been answered and terminated on the far end. Verify the Siri in-car UI is dismissed and the head unit returns to its initial state.

2022-07-08 | Copyright © 2022 Apple Inc. All Rights Reserved.

7. While iPhone music is playing, start Siri and say "Call *(insert contact to call)*". Verify call transition is handled correctly by the head unit. Verify iPhone music playback resumes after the call has been answered and terminated on the near end (for example, on the head unit). Verify the Siri in-car UI is dismissed and the head unit returns to its initial state.
8. Pause music playback on the head unit (using iAP2 commands). Start Siri and say "Call *insert contact name to call*". Verify call transition is handled correctly by the head unit. Verify iPhone music playback remains paused after the call has been answered and terminated on the far end. Verify the Siri in-car UI is dismissed and the head unit returns to its initial state.

2022-07-08 | Copyright © 2022 Apple Inc. All Rights Reserved.

32. Wi-Fi Information Sharing

Wi-Fi configuration information can be exchanged between devices and accessories.

Devices can share Wi-Fi configuration information with an accessory. The accessory can initiate this process, but the user shall grant permission for the device to share this information. The device can only share information about the currently connected Wi-Fi network, and this feature will not account for other router-configured access control mechanisms, such as RADIUS or MAC address filtering.

Figure 32-1 Wi-Fi Information Sharing Alert

See the Accessory Interface Specification (page 19) for more information.

Protocols

33. USB Power Capability Vendor Request

If the accessory is a USB host, and it does not implement iAP2 (page 169), then it may send an Apple-specific USB vendor request communicating how much power is available to the device. In this case, the accessory shall enumerate and identify the presence of a device, then send the vendor request. The vendor request shall be sent every time the device is enumerated by the accessory.

Table 33-1 USB Vendor Request for non-iAP2 accessory USB Embedded Host

Field	Value	Comments
`bmRequestType`	`0x40`	Device-to-host request, vendor-defined type, device is recipient.
`bRequest`	`0x40`	Vendor-defined USB get enabled capabilities request.
`wValue`	See comments.	Charging current available, expressed as an offset from 500 mA. Shall be 500 (1000 mA charging current available), 1000 (1500 mA charging current available), 1600 (2100 mA charging current available), 1900 (2400 mA charging current available), or 2500 (3000 mA charging current available).
`wIndex`	See comments.	Shall be the same as wValue.
`wLength`	`0`	0 bytes expected.

2022-07-08 | Copyright © 2022 Apple Inc. All Rights Reserved.

34. USB D+/D- Resistor Networks

Accessories not implementing any of the following may use USB resistor networks to identify their current capability:

- iAP2 (page 169).
- USB Power Capability Vendor Request (page 159).
- USB-C Current (page 164).
- USB Power Delivery (page 163).

Note:
Device power draw varies with environmental factors. All accessory power source testing shall be performed with programmable loads, not devices.

34.1 Declaring Power Source Capability

Accessories shall connect the USB D+ and USB D- pins to resistor networks as shown in Figure 34-1 (page 160).

Figure 34-1 USB D+/D- resistor networks

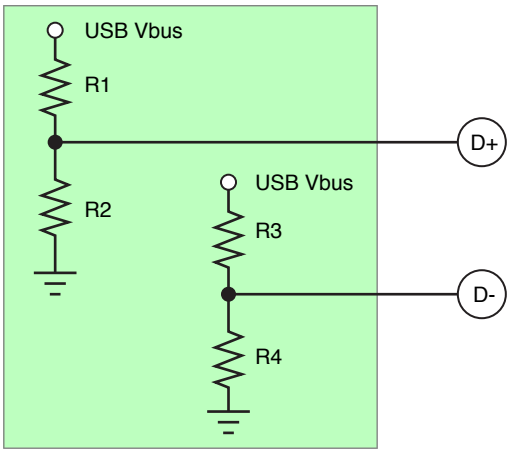

Copyright © 2022 Apple Inc. All Rights Reserved.

Note:
Every iOS device-compatible connector on an accessory using a USB resistor network shall have its own set of resistors. The accessory shall be capable of supplying the total current required when all connectors are in use, regardless of whether the connectors are compatible with devices or not.

The resistor network shall be connected at all times unless the accessory uses one of the following methods to enable charging or detect the presence of a device. In these cases, it shall immediately present the resistor network. The accessory:

- Uses a direct user action to enable charging.
- Senses the attachment of the device via electromechanical means such as a contact switch.

The accessory shall not monitor the USB D+ and USB D- pins to detect the presence of a device.

Note:
All resistors used to implement the networks specified in Figure 34-1 (page 160) shall have a tolerance of 1% or better. The resistor network shall not be emulated by driving the voltage of the USB D+/D- pins using some other means.

Table 34-1 USB D+/D- resistor values

Max Current	R1	R2	R3	R4
3000 mA	43.2 kΩ	49.9 kΩ	24.9 kΩ	49.9 kΩ
2400 mA	43.2 kΩ	49.9 kΩ	43.2 kΩ	49.9 kΩ
2100 mA	43.2 kΩ	49.9 kΩ	75.0 kΩ	49.9 kΩ
1000 mA	75.0 kΩ	49.9 kΩ	43.2 kΩ	49.9 kΩ

34.2 Identifying Power Source Current Limit

Accessories shall take into account the variation of USB VBUS voltage and resistor tolerances.

The resistor network values and corresponding current source limits should be identified using the following procedures:

1. Read the VBUS voltage using an ADC. If value is less than 4.5 V, return no resistors detected.
2. Pull-down the D+ and D- lines and read the voltage using an ADC. If either voltage value is less than 1 V, return no resistors detected.
3. Disable the D+ and D- pull-downs and allow the voltage to return to normal.
4. Read the D+ and D- voltages using an ADC (to determine the value for R1 and R3 respectively):
   - If voltage is >2.995 V (based on 1 MΩ load impedance), assume a resistor value of 24.9 kΩ.

2022-07-08 | Copyright © 2022 Apple Inc. All Rights Reserved.

- If voltage is between 2.320 V and 2.995 V (based on 1 MΩ load impedance), assume a resistor value of 43.2 kΩ.
- If voltage is < 2.320 V (based on 1 MΩ load impedance), assume a resistor value of 75.0 kΩ.

5. Determine the max current based on Table 34-2 (page 162).
6. If resistor values could not be identified, proceed to identify the power available based on the *USB Battery Charging 1.2* specification.

Table 34-2 USB D+/D- resistor values

Max Current	R1	R2	R3	R4
1000 mA	24.9 kΩ	49.9 kΩ	24.9 kΩ	49.9 kΩ
1000 mA	24.9 kΩ	49.9 kΩ	43.2 kΩ	49.9 kΩ
1000 mA	24.9 kΩ	49.9 kΩ	75.0 kΩ	49.9 kΩ
3000 mA	43.2 kΩ	49.9 kΩ	24.9 kΩ	49.9 kΩ
2400 mA	43.2 kΩ	49.9 kΩ	43.2 kΩ	49.9 kΩ
2100 mA	43.2 kΩ	49.9 kΩ	75.0 kΩ	49.9 kΩ
1000 mA	75.0 kΩ	49.9 kΩ	24.9 kΩ	49.9 kΩ
1000 mA	75.0 kΩ	49.9 kΩ	43.2 kΩ	49.9 kΩ
500 mA	75.0 kΩ	49.9 kΩ	75.0 kΩ	49.9 kΩ

2022-07-08 | Copyright © 2022 Apple Inc. All Rights Reserved.

35. USB Power Delivery

Accessories providing USB Power Delivery (USB-PD) or drawing power from USB-PD sources shall comply with the *USB Power Delivery Specification, Revision 3.1*, version 1.3.

Accessories implementing USB-PD shall incorporate a USB-IF certified PD controller with a *Silicon* Test ID from the USB-IF.

Accessories drawing power from USB-PD sources shall correctly identify all sources as defined in the *USB Power Delivery Specification*.

Apple recommends the GRL-USB-PD-C2 (see https://www.graniteriverlabs.com/en-us/test-solutions/protocol-power-test-solutions/usb-pd-c2) for USB-PD testing and compliance verification.

2022-07-08 | Copyright © 2022 Apple Inc. All Rights Reserved.

36. USB-C Current

Accessories providing direct power via USB-C Current or drawing power from USB-C Current sources shall comply with the *USB Type-C Cable and Connector Specification Release 1.3*, section 4.6.2.

Apple recommends the GRL-USB-PD-C2 (see https://www.graniteriverlabs.com/en-us/test-solutions/protocol-power-test-solutions/usb-pd-c2) for USB-C Current testing and compliance verification.

Copyright © 2022 Apple Inc. All Rights Reserved.

37. Advanced Audio Distribution Profile (A2DP)

Accessories may implement the Advanced Audio Distribution Profile (A2DP) over Bluetooth (page 174) to receive audio from iOS devices and Mac computers.

The audio content from the device can be broadly classified into two categories:

- Audio content from music, video, or gaming applications.
- System-generated sounds for alerts and notifications.

A2DP is often implemented in speakers and headsets.

Accessories implementing A2DP shall satisfy all requirements stated in Bluetooth (page 174).

37.1 Bluetooth A2DP Specification

Every accessory implementing the Advanced Audio Distribution Profile shall meet the requirements of the Bluetooth *Advanced Audio Distribution Profile* specification, Version 1.2.

37.1.1 AVDTP Transactions

Accessories shall respond to Audio/Video Distribution Transport Protocol (AVDTP) signaling transactions before the device's 5 second RTX_SIG_TIMER expires or the device will terminate the signaling channel. See Section 6.2 "Transaction Model" and section 6.4 "Signal Command Set" of the Bluetooth *Audio/Video Distribution Transport Protocol*, Version 1.3.

37.2 SubBand Codec (SBC)

The SBC Codec Specific Information Elements, defined in Section 4.3.2 of the A2DP specification, applicable to iOS devices and Mac computers are listed in Table 37-1 (page 165).

Table 37-1 SubBand Codec Information Elements for iOS devices and Mac computers

Element	Value
Sampling Frequency	44,100 Hz
Channel Mode	Stereo

2022-07-08 | Copyright © 2022 Apple Inc. All Rights Reserved.

Element	Value
Block Length	16
Subbands	8
Allocation Method	Loudness
Bitpool range	2 to 53. Accessories for iOS devices and Mac computers should support 53.

37.3 MPEG 2/4 AAC Codecs

Devices support the non-mandatory codec MPEG-2/4 AAC, as defined in Section 4.5 of the *Advanced Audio Distribution Profile* specification, Version 1.2. Accessories should use the AAC codec in addition to SBC, because AAC provides higher audio quality for a given bit rate.

> **Note:**
> The following specifications provide details of Apple's implementation of the MPEG-2/4 AAC codec. In case of conflicts, the A2DP specification governs.

The MPEG 2/4 AAC Codec Specific Information Elements, defined in Section 4.5 of the A2DP specification, applicable to devices are listed in Table 37-2 (page 166).

Table 37-2 MPEG-2/4 AAC Codec Information Elements for devices

Element	Value
Object Type	MPEG-2 AAC LC
Sampling Frequency	44,100 Hz
Channels	2
Bit rate	264,630 bps
VBR	0

AAC audio stream packets in devices have the structure shown in Table 37-3 (page 166).

Table 37-3 AAC audio packet for devices

L2CAP	AVDTP	MPEG-4 LATM	MPEG-4 AAC
Header	Header	AudioMuxElement	Audio Payload

The AAC Media Payload Format, as defined in Section 4.5.4 of the A2DP specification, is formatted using LATM, as defined in Section 4 of *IETF RFC 3016*. The following notes apply to the packet fields shown in Table 37-3 (page 166).

- The recommended L2CAP MTU value for each device's AAC streaming channel is 885 bytes.

2022-07-08 | Copyright © 2022 Apple Inc. All Rights Reserved.

- The AVDTP Header is shown as the RTP header in Figure 4 of RFC 3016, and is the header defined in Section 7.2.1 of the Bluetooth *Audio/Video Distribution Transport Protocol*, Version 1.2.
- The `AudioMuxElement` is the same as the RTP payload in RFC 3016. It is defined in Section 1.7.3, Table 1.41 in ISO/IEC 14496-3:2009, subpart 1. The `muxConfigPresent` argument to the `AudioMuxElement` is set to 1 (in-band mode), as recommended in Section 4.1 of RFC 3016. As recommended in Section 4.3 of RFC 3016, only one `AudioMuxElement` is put into each AVDTP packet.
- The audio payload is encoded using MPEG-4, as recommended in Section 4.5.4 of the A2DP specification.
- The accessory should support AAC-LC VBR and handle bit rate changes without audio gaps. Devices will vary AAC bit rate depending on the content.

37.4 Test Procedures

37.4.1 Audio Quality

Verify there are no audio quality issues in each of the following scenarios:

1. Stream music from the Apple Music app.
2. Stream music from a radio station within the Apple Music app.
3. Stream audio using the Apple Podcasts app.

37.4.2 Audio Switching

1. During A2DP streaming, switch audio back to device and switch back to accessory.
2. Audio should be routed to the intended source. Audio quality should be good switching back to Bluetooth.

37.4.3 HFP Interaction

1. Make incoming / outgoing call during A2DP.
2. Audio should be suspended during the call and resume after the call.

37.4.4 Siri

1. Trigger Siri during A2DP.
2. Audio should resume after the Siri session.

2022-07-08 | Copyright © 2022 Apple Inc. All Rights Reserved.

37.4.5 Video Playback

1. Stream A2DP while watching a video.
2. Audio / video synchronization and quality should be good.

2022-07-08 | Copyright © 2022 Apple Inc. All Rights Reserved.

38. iAP2

Accessories may use the iAP2 protocol to access advanced device features. One such feature is the ability to communicate securely with third-party iOS applications using the iOS External Accessory Framework (https://developer.apple.com/library/archive/featuredarticles/ExternalAccessoryPT/Introduction/Introduction.html).

See the Accessory Interface Specification (page 19) for more information.

Copyright © 2022 Apple Inc. All Rights Reserved.

39. Human Interface Device (HID)

Devices can accept input from and send output to Human Interface Device (HID) accessories, such as external keyboards, trackpads, mice, and game controllers. This capability is made available system-wide for all apps on the device as well as to support features built into iOS, iPadOS, and tvOS. If an accessory is designed to provide human input events to a specific third-party app, the accessory should use the External Accessory Protocol feature instead; see the Accessory Interface Specification (page 19) for more information.

The HID protocol can be implemented over:

- USB
- Bluetooth

39.1 Requirements

Accessories supporting the HID protocol shall comply with the following requirements:

- Accessories shall only send HID reports for changes in physical or virtual control surfaces declared in the corresponding HID descriptor.
- Accessories shall not send a HID report if there has not been any change in the state of the corresponding physical or virtual control surface. For example, the accessory shall never generate a "Play/Pause" event without the user pressing a dedicated "Play/Pause" button.
- Each HID report shall contain the correct number of bytes as described in its corresponding HID descriptor.
- The accessory shall not anticipate or assume corresponding state changes in the device after sending HID reports.
- Unless otherwise specified:
  - The accessory shall be capable of generating and receiving all HID usages declared in its HID descriptor.
  - The accessory's declared HID usages shall map directly to physical or virtual control surfaces on a 1:1 basis. For example, a button labeled "Play/Pause" shall send a Play/Pause HID usage and not "Play" or "Pause" usages. Compound controls such as knobs, joysticks, and directional pads may be considered multiple control surfaces. For example, clockwise and counterclockwise rotation may map to separate HID usages.

2022-07-08 | Copyright © 2022 Apple Inc. All Rights Reserved.

- Physical or virtual control surfaces generating HID reports shall be labeled with appropriate iconography or text corresponding to the resulting device behavior. For example, a Play/Pause button shall be labeled with the text 'Play/Pause' or a Play/Pause icon.
- The accessory shall send one HID report in response to each direct user action on the corresponding physical or virtual control surface. For example:
  - When the user presses a button, one 'button pressed' HID report shall be sent to the device.
  - When the user releases the button, one 'button released' HID report shall be sent to the device.

39.1.1 Report Descriptor

When padding packets to align within a byte boundary, each Main item tag (Input, Output, or Feature) shall be marked constant. Padding bits should be set to 0.

When defining Variable type Input/Output fields, either:

- Report Count number shall correspond to the number of Usages specified.
- Report Size shall be 8 and the Report Count shall correspond to the size of a multi-byte blob.

39.1.2 USB

If implementing HID over USB, the accessory shall comply with the *Device Class Definition for Human Interface Devices 1.11*, see https://www.usb.org/hid.

39.2 Test Procedures

39.2.1 General

1. Verify the accessory generates and receives all HID usages declared in the component's HID descriptor.
2. Verify the accessory does not send a HID report if there has not been any change in the state of the control surfaces (that is, no polling of HID reports).
3. Verify if any accessory has physical or virtual control surfaces generating accessory HID usages, the controls are labeled with appropriate iconography or text corresponding to the resulting device behavior (for example, a Play/Pause button is labeled with the text "Play/Pause" or a Play/Pause icon).
4. Verify HID usages map to physical or virtual controls on a 1:1 basis (for example, Play button only sends Play usages, not Play/Pause).

2022-07-08 | Copyright © 2022 Apple Inc. All Rights Reserved.

5. Verify one accessory HID usage report is sent in response to each direct user action on the corresponding physical or virtual control surface. For example, when the user presses a button, one 'button pressed' usage report is sent, and a separate 'button released' usage report is sent when the user releases the button.

2022-07-08 | Copyright © 2022 Apple Inc. All Rights Reserved.

Transports

40. Bluetooth

Accessories integrating Bluetooth technology shall comply with the requirements stated in this chapter.

Accessories shall support the *Bluetooth Core Specification* Version 2.1 + EDR or higher. This specification introduced the important security feature Secure Simple Pairing as well as Extended Inquiry Response.

40.1 Enhanced Data Rate

The Enhanced Data Rate (EDR) feature introduced in the *Bluetooth 2.0* specification enables accessories to communicate more efficiently. Every accessory shall use EDR for the following reasons:

- EDR provides higher data rates compared to Basic Data Rate (BDR).
- EDR communicates more efficiently, transferring more data bits in less time.
- EDR reduces the power consumption used per bit transferred.
- EDR improves coexistence with Wi-Fi and other connected Bluetooth accessories because EDR uses less airtime.
- EDR improves performance in multipoint configurations.

40.2 Adaptive Frequency Hopping

Adaptive Frequency Hopping (AFH) introduced in the *Bluetooth 1.2* specification improves coexistence with Wi-Fi and other connected Bluetooth accessories. Every accessory shall use AFH.

40.3 Sniff Mode for Low Power Consumption

Minimizing power consumption is critical for all mobile devices, therefore accessories:

- Shall support and should request Bluetooth sniff mode.
- Shall accept requests for sniff mode and support all valid parameters listed in the Bluetooth specification.
- Shall support a sniff interval of 15 ms.
- Should use the following recommended sniff mode values:
  - Max Interval: 15 ms
  - Min Interval: 15 ms

Copyright © 2022 Apple Inc. All Rights Reserved.

  - Sniff Attempt: 1
  - Sniff Timeout: 0
- Shall not renegotiate sniff after being established.
- Shall support sniff subrating.

Accessories compatible with iOS devices and Mac computers should also use sniff mode as often as possible, especially when there is little or no data being transmitted over the Bluetooth link. Besides the power consumption advantages, sniff mode enables better antenna sharing with Wi-Fi.

Sniff mode parameters are specific to the usage model and Bluetooth profile. The device expects the accessory to request sniff mode with the appropriate parameters for a specific usage. If the accessory does not send a sniff mode request, the device may send a sniff mode request. When the device sends a sniff mode request, the accessory shall accept the request and its parameters without negotiation.

If the accessory sets the sniff mode parameters, the accessory shall set the sniff interval to less than a third of the Bluetooth baseband Link Supervision Timeout (page 177). This makes the Bluetooth link less susceptible to interference. To improve link robustness, the accessory should use a shorter sniff interval instead of multiple sniff attempts.

Links with a sniff interval of 1 second or more require a large correlation window, which has to be taken into account when calculating the number of sniff attempts. With sniff intervals shorter than 1 second, multiple sniff attempts can improve link robustness but will increase power consumption.

40.4 Role and Topology Management

Accessories shall:
- Accept a request for Role Switch from a device.
- Continue with the connection when the device rejects a request for Role Switch.

In a Bluetooth connection, there are two entities:
- The Central establishes the common clock and frequency hopping synchronization reference.
- The Peripheral synchronizes with the Central.

The Central can be synchronized with multiple Peripherals, thus forming a piconet. The Central can also be a Peripheral to another Central, creating a scatternet.

A scatternet creates complications since the device has to alternate between the two piconets wasting valuable bandwidth. Managing network topology is important to maximize performance. The device may request a Role Switch, depending on its current topology, and the accessory shall accept the request. The device may also reject a request for a Role Switch due to topology concerns. Suboptimal topologies may degrade audio quality and user experience.

Copyright © 2022 Apple Inc. All Rights Reserved.

Accessories should avoid requesting to be Central as the device needs to be Central in more frequently occurring scenarios. Accessories insisting on being Central may negatively impact overall user experience.

Accessories connecting to multiple iOS devices or Mac computers simultaneously shall support creating a scatternet.

40.5 Extended Inquiry Response

Accessories shall provide the following information in its Extended Inquiry Response packet:

- The Local Name of the accessory (Complete or Shortened).
- The TX Power Level.

During Bluetooth discovery, devices display accessories Friendly Names when available. Extended Inquiry Response enables accessories to proactively send their Local Name and other information as part of an Inquiry Response increasing the speed and efficiency of the discovery process.

The Local Name should match the accessory's labeling and packaging without colons ':' or semi-colons ';'. Accessories may append up to 6 differentiating characters to the Local Name, such as the last few digits of a serial number or MAC address, if users are likely to encounter more than one of the accessories at the same time.

If the accessory allows the user to customize the Local Name parameter, the accessory should provide a means to restore the factory default name.

40.6 Secure Simple Pairing

Accessories shall:

- Use Secure Simple Pairing.
- Use the Numerical Comparison method if it has a display and input device supporting it.

Secure Simple Pairing greatly increases security and is a mandatory security feature introduced in the Bluetooth 2.1 specification. To protect against a man-in-the-middle attack, the Numerical Comparison association model should be used whenever feasible. See Volume 1, Section 5.4 in the *Bluetooth Core Specification*, Version 2.1 + EDR.

2022-07-08 | Copyright © 2022 Apple Inc. All Rights Reserved.

40.7 Pairing Button

If the accessory has a dedicated pairing control surface and it is labeled, it should use official Bluetooth branding. See https://www.bluetooth.com/develop-with-bluetooth/marketing-branding/.

40.8 Class of Device (CoD)

iOS devices and Mac computers use the accessory's Class of Device for UI purposes or to configure specific features.

Accessories shall accurately set their Class of Device using the Bluetooth SIG defined Major Device Class and Minor Device Class. See Volume 3, Part C, Section 3.2.4 in the *Bluetooth Core Specification*, Version 5.0.

For example, an audio/video accessory intended to operate in a vehicle should set Major Device Class to *audio/video* and Minor Device Class to *car-audio*.

40.9 Link Supervision Timeout

The link supervision timeout is used to detect link loss between the accessory and the device.

The accessory shall set the link supervision timeout to 2 seconds or greater when it is the Central to account for the unpredictable nature of RF signals as well as the device's need to service other concurrent wireless systems.

40.10 Delay Reporting

Devices (as of iOS 8.2) support the Delay Reporting commands as specified in the Bluetooth *Audio/Video Distribution Transport Protocol*, Version 1.3. Accessories should provide this information as it is used to improve audio/video synchronization for video playback. Accessories should not report a delay of more than 1000 ms and should not update the delay more than 1 time per second.

40.11 Profiles

The Apple Bluetooth profiles knowledge base article https://support.apple.com/kb/ht3647 provides a complete list of profiles specific devices support. The Bluetooth specifications are the starting point for designing accessories compatible with these devices. The following sections add information and requirements for some profiles, which can help accessory developers achieve superior results.

2022-07-08 | Copyright © 2022 Apple Inc. All Rights Reserved.

40.11.1 Device ID Profile (DID)

Accessories shall:

- Support the Bluetooth Device ID Profile, version 1.3 or higher.
- Use the Company Identifier from the Assigned Numbers specification assigned by the Bluetooth SIG as the Vendor ID value (VID), see https://www.bluetooth.com/specifications/assigned-numbers/company-identifiers/. Bluetooth HID Profile accessories may use a VID assigned by the USB Implementers Forum (USB-IF), see https://www.usb.org/getting-vendor-id, if the manufacturer does not have a Bluetooth SIG company identifier.
- Use its VID value for the end product manufacturer.
- Not use the Company ID assigned to Apple by the Bluetooth SIG or the Vendor ID assigned to Apple by the USB Implementers Forum.
- Use the Vendor ID Source field to identify which organization assigned the value used in Vendor ID field. See Section 5.6 of the *Bluetooth Device ID Profile Specification*.
- Use a ProductID value uniquely identifying the product.
- Use a Version value uniquely identifying the software version.

The Device ID record enables devices to identify the implementation of the remote accessory. This is valuable information and can be used to bridge alternate interpretations of the Bluetooth specification when communicating with a remote accessory. Therefore it is important the information in the Device ID record uniquely identify the implementation.

In the case of Bluetooth car kit devices, the same car kit might go into two different car models. Ideally the two car kits should have different ProductIDs. However, it is acceptable for them to have the same ProductID as long as they have identical hardware, software, and features. If the implementations differ at all, they should have different ProductIDs. The accessory can also use a secondary Device ID record to uniquely identify the product ID or model number.

40.11.2 Service Discovery Protocol (SDP)

To facilitate caching Service Discovery Protocol (SDP) service records, accessories shall:

- Support the ServiceDiscoveryServer Service Class.
- Support the ServiceDatabaseState attribute.
  - The attribute's value shall change whenever any SDP service record or attributes within a record are added, removed, or modified.
  - The attribute's value shall not change based on RFCOMM channel protocol parameters since devices query these values separately at connection time.

40.11.3 Hands-Free Profile (HFP)

Accessories supporting Handsfree Profile should meet the requirements of the *Bluetooth Hands-Free Profile Specification*, Version 1.5 or higher. Additional Apple requirements are specified in this section.

2022-07-08 | Copyright © 2022 Apple Inc. All Rights Reserved.

Remote accessories can use the Bluetooth *Hands-Free Profile* for phone communications. To achieve the best user experience, the remote accessory should support the following features, which are optional in the Bluetooth specification.

40.11.3.1 Remote Audio Volume Control

Accessories supporting HFP should:

- Support Remote Audio Volume Control so the speaker volume on the Hands-Free accessory can be controlled from the device as described in Section 4.28 in the *Bluetooth Hands-Free Profile Specification* version 1.5.
- Set the Remote volume control bit in the Supported Features bitmap sent with the `AT+BRSF=` command.

In some situations it is easier for the user to control the output volume through the device instead of directly on the remote accessory. For example, a passenger (or-if the car is parked-the driver) in a car could use the volume slider on the phone to control the audio volume. Volume control synchronization is outlined in Section 4.48.2 in the *Bluetooth Hands-Free Profile Specification* version 1.5.

40.11.3.2 Indicator Event Reporting

Accessories supporting HFP should use indicator events reporting, and not perform repetitive polling of status.

iOS devices and Mac computers support all mandatory and optional indicators specified in HFP version 1.5 (service, call, callsetup, callheld, signal, roam, battchg). To minimize unnecessary polling of status using the `AT+CIND?` command, the remote accessory should enable indicator events reporting by sending an `AT+CMER` command. The device will then send a `+CIEV` event when there is a change in status of an indicator. The remote accessory should request the initial status using the `AT+CIND=?` and `AT+CIND?` commands, according to the HFP specification.

40.11.3.3 Voice Recognition Activation

Accessories supporting HFP shall:

- Support Voice Recognition Activation, both AG and HF initiated as described in Section 4.25 in the *Bluetooth Hands-Free Profile Specification* version 1.5.
- Set the Voice Recognition Activation bit in the "SupportedFeatures" bitmap sent with the `AT+BRSF=` command.

iOS devices and Mac computers support voice recognition initiated by remote (Hands-Free) accessories and iOS (Audio Gateway) accessories.

2022-07-08 | Copyright © 2022 Apple Inc. All Rights Reserved.

40.11.3.4 Echo Cancellation and Noise Reduction

When echo cancellation and noise reduction are performed locally on a Hands-Free accessory, the accessory should turn off echo cancellation and noise reduction on the device by sending an AT+NREC command, as described in Section 4.24 in the *Bluetooth Hands-Free Profile Specification* version 1.5.

iOS devices and Mac computers support echo cancellation and noise reduction; these features are active by default. If a Hands-Free accessory also does echo cancellation and noise reduction the accessory needs to turn these features off on the device (the Audio Gateway). This avoids unnecessary degradation of audio quality due to double audio processing.

40.11.3.5 In-Band Ringing

Accessories supporting HFP should also support In-Band Ringing as specified in Section 4.13.1 in the *Bluetooth Hands-Free Profile Specification* version 1.5. If the user sets a ring tone on the device, the same ring tone should sound on the hands-free accessory.

40.11.3.6 Synchronous Connection

Accessories supporting HFP shall:

- Support eSCO parameter set S2 and S3 and accept requests for these settings. See Section 5.6 of the *Bluetooth Hands-Free Profile Specification* version 1.5.
- Request eSCO parameter set S2 or S3 when setting up a Synchronous Connection. Note that eSCO parameter set S1 should not be requested.
- Render audio within 40 ms after the SCO/eSCO connection has been set up.

The eSCO packet types offers retransmission of packets; traditional SCO packets are not retransmitted. This improves audio quality and the user's experience. The eSCO packet types 2-EV3 and 3-EV3 offer a greater time interval between packets, which can improve Wi-Fi performance and allow time for other concurrent Bluetooth connections to send data. Apple strongly recommends the use of 2-EV3 and 3-EV3 packets for SCO connections. Using HV3 packets is highly discouraged. HV3 packets require more link time and does not allow for retransmission of audio packets which impacts the audio performance in presence of RF interference.

40.11.3.7 Wide Band Speech

Accessories supporting HFP should support Wide Band Speech as described in Section 5.7.4 of the Bluetooth *Hands-Free Profile* specification version 1.6. If Wide Band Speech is supported, the accessory should support the T2 link parameter settings.

All devices running iOS 5 or later support Wide Band Speech. If both the device and the accessory support Wide Band Speech, the device will use it for eSCO connections scenarios like cellular calls, FaceTime, and Siri.

2022-07-08 | Copyright © 2022 Apple Inc. All Rights Reserved.

40.11.4 Message Access Profile (MAP)

Accessories supporting Message Access Profile shall:

- Support Message Notification as described in Section 4.1 of the *Bluetooth Message Access Profile Specification*, version 1.1.
- Register for notifications immediately after the connection is established, as described in Section 4.5 in the *Message Access Profile Specification*, version 1.1.

All devices running iOS 13.0 or later support MAP 1.1.

40.11.5 Audio/Video Remote Control Profile (AVRCP)

Accessories supporting Audio/Video Remote Control Profile should meet the requirements of the *Bluetooth Audio/Video Remote Control Profile Specification*, Version 1.4. Additional Apple requirements are specified in this section.

40.11.5.1 Supported Operations

iOS devices and Mac computers support the following operation_IDs in passthrough commands:

- Play
- Stop
- Pause
- Fast Forward
- Rewind
- Forward
- Backward

40.11.5.2 Repeat and Shuffle Modes

Every device supports Repeat and Shuffle modes in the role of an AVRCP target. An AVRCP controller may use `SetPlayerApplicationSettingValue` to set a value on the device and `GetPlayerApplicationSettingValue` to read a value, as described in Sections 6.5.4 and 6.4.3 of the *Bluetooth Audio/Video Remote Control Profile Specification* version 1.4.

40.11.5.3 Notifications

Accessories supporting AVRCP should register for notifications and not perform repetitive polling to determine the status of the device.

Every device supports registering for notifications in the role of an AVRCP Target, as described in Section 6.7 of the *Bluetooth Audio/Video Remote Control Profile Specification* version 1.4. The commands `RegisterNotification` and `GetPlayStatus` are supported for these notifications:

- EVENT_PLAYBACK_STATUS_CHANGED

2022-07-08 | Copyright © 2022 Apple Inc. All Rights Reserved.

- EVENT_TRACK_CHANGED
- EVENT_NOW_PLAYING_CONTENT_CHANGED
- EVENT_AVAILABLE_PLAYERS_CHANGED
- EVENT_ADDRESSED_PLAYER_CHANGED
- EVENT_VOLUME_CHANGED

40.11.5.4 Play/Pause Button

Accessories supporting AVRCP implementing a Play/Pause control surface shall confirm the playback status of the device using AVRCP Notifications (page 181) before sending a Play or Pause command, see Supported Operations (page 181). Specifically:

- If a device notifies an accessory that it is paused, pressing the accessory's Play/Pause control surface should send a Play command.
- If a device notifies the accessory that it is playing, pressing the accessory's Play/Pause control surface should send a Pause command.
- The accessory should not infer device playback status based on the number of times the Play/Pause control surface has been pressed.

40.11.5.5 Volume Handling

Accessories supporting AVRCP should support Absolute Volume, as described in Section 6.13 of the *Bluetooth Audio/Video Remote Control Profile Specification* version 1.4.

Every device supports volume handling in the role of AVRCP Controller.

40.11.5.6 Browsing

Accessories supporting Browsing (in controller role) as part of AVRCP shall:

- Not try to index or cache the entire library upon connection. The device may contain tens of thousands of media items, each present multiple times in the hierarchy.
- When browsing a specific folder, do not fetch all its items. Only fetch those displayed to the user. The accessory may prefetch a few items to improve the responsiveness of the user interface.
- Not reorder items (for example, alphabetically).
- Not assume UIDs to be statically defined, especially in the root folder. The ordering and UIDs of folders and items may change at any point in future releases.
- Send the `SetBrowsedPlayer` command after receiving an EVENT_UIDS_CHANGED notification.
- Not assume the UID passed to the PlayItem command will result in the media player playing that UID.

2022-07-08 | Copyright © 2022 Apple Inc. All Rights Reserved.

Currently only the built-in Music app supports browsing. When switching between players, an EVENT_AVAILABLE_PLAYERS_CHANGED notification and an EVENT_ADDRESSED_PLAYER_CHANGED notification will be generated. The UI then needs to look at the feature bit mask of the listed player to determine whether browsing is currently available.

All devices running iOS 6.0 or later support AVRCP Browsing.

40.11.5.7 iOS App-Provided Metadata

An audio app running on a device may use the iOS Media Player Framework to provide metadata about the current audio stream. The device supplies this metadata to the accessory using AVRCP. Requirements and usage for these messages may be found in the `MPNowPlayingInfoCenter` class in Apple Media Player Framework documentation.

40.11.6 Advanced Audio Distribution Profile (A2DP)

See Advanced Audio Distribution Profile (A2DP) (page 165).

40.12 Audio Routing

This section describes how an accessory can differentiate between various audio contents coming from a device and use this information to decide playback behavior.

An accessory can receive audio data from the device using either of two Bluetooth profiles:

- HFP using eSCO channel
- A2DP using ACL channel

The device picks which channel to use depending on how the audio content is used. An audio path created for two way communication (for example, phone calls or FaceTime) always uses the HFP (eSCO) route for sending audio data. Music and similar content uses the A2DP route. In the absence of a defined route, audio playback will default to the device.

40.12.1 Audio Data Received using HFP Profile

Most of the audio content sent using HFP (eSCO) routes requires two way communication. Scenarios where HFP (eSCO) is used include, but are not limited to: cellular calls, FaceTime, and voice mail.

The accessory speaker and microphone should be dedicated to the HFP (eSCO) route and not mixed/muxed with any other audio sources.

2022-07-08 | Copyright © 2022 Apple Inc. All Rights Reserved.

40.12.2 Audio Data Received using A2DP Profile

Audio content transferred using A2DP profiles can be broadly classified into two categories:

- Audio content from music, video, or game-like applications.
- System-generated sound for alerts and notifications.

40.12.2.1 Differentiating Audio Content from System Sounds

Music-like content can be differentiated from system sound by adding support for Audio/Video Remote Control Profile (AVRCP) version 1.3 or later. The AVRCP profile allows an accessory to be aware of the audio playback state in the device, using notifications. See Audio/Video Remote Control Profile (AVRCP) (page 181).

When a device initiates audio playback over an A2DP channel for playing music content, an AVRCP notification EVENT_PLAYBACK_STATUS_CHANGED is sent to indicate playback status has changed to play state. See Section 6.7.2 of the *Audio/Video Remote Control Profile* specification, version 1.4. This indicates audio data using the A2DP profile contains music. When a device initiates audio playback over an A2DP channel for playing system sounds, no AVRCP notifications are sent.

Figure 40-1 (page 184) and Figure 40-2 (page 185) show the difference between the notifications for music playback and for system sounds.

Figure 40-1 Initiate Audio Playback (for example, music)

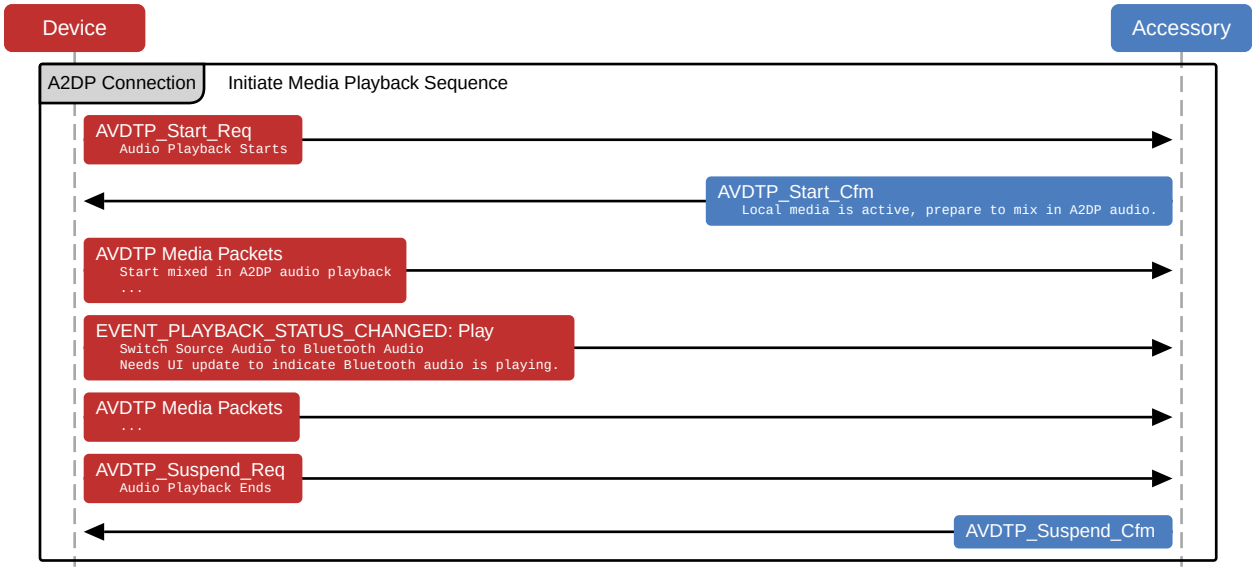

Copyright © 2022 Apple Inc. All Rights Reserved.

Figure 40-2 Initiate System Sound (for example, turn-by-turn directions)

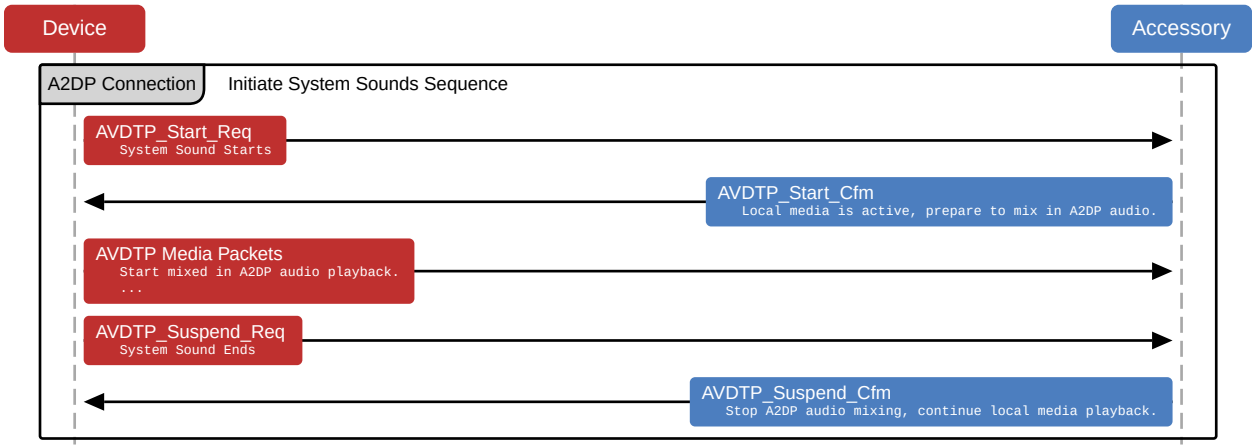

40.12.2.2 Expected Audio Routing Behavior for A2DP

The accessory should tune its audio routing behavior based on audio content over the A2DP channel.

If audio data contains music, accessory speakers are expected to be dedicated to audio data using the Bluetooth link and any other audio playback is paused. If audio data contains system sound, it is expected the accessory can render audio as desired. If the accessory is playing audio from a different source, then system sound data can be mixed with the existing track for playback; it is not necessary to pause existing audio playback on the device.

40.13 HID

When implementing HID over Bluetooth, the accessory:

- Should support Bluetooth HID Profile 1.1.
- Should support Sniff Mode for Low Power Consumption (page 174).
- Should use the following parameters in SDP for sniff subrating:
  - HIDSSRHostMaxLatency - 450 ms (720 slots)
  - HIDSSRHostMinTimeout - 45 ms (72 slots)
- Should use a typical report packet of 22 bytes or less. This is small enough to fit into a DH1 packet with L2CAP and HID header.

Copyright © 2022 Apple Inc. All Rights Reserved.

41. Bluetooth Low Energy (BLE)

The *Bluetooth 4.0* specification introduces Bluetooth Low Energy (BLE), a wireless technology targeted for accessories with limited battery resources. If Bluetooth Low Energy is supported, the accessory should follow the guidelines in this section.

41.1 Role

The accessory should implement either the Peripheral role as defined in the *Bluetooth 4.0* specification, Volume 3, Part C, Section 2.2.2.3 or the Broadcaster role, as defined in Section 2.2.2.1.

41.2 Advertising Channels

The accessory should advertise on all three advertising channels (37, 38, and 39) at each advertising event. See the *Bluetooth 4.0* specification, Volume 6, Part B, Section 4.4.2.1.

41.3 Advertising PDU

The accessory should use one of the following advertising PDUs:

- ADV_IND
- ADV_NOCONN_IND
- ADV_SCAN_IND

ADV_DIRECT_IND should not be used. See the *Bluetooth 4.0* specification, Volume 6, Part B, Section 2.3.1.

41.4 Advertising Data

The advertising data sent by the accessory should contain at least the following information as described in the *Bluetooth Core Specification Supplement*, Part A:

- Flags
- TX Power Level

Copyright © 2022 Apple Inc. All Rights Reserved.

- Local Name
- Services

The Local Name should match the accessory's markings and packaging and not contain a colon ':' or semi-colon ';'.

The accessory may put the Local Name and the TX Power Level data in the SCAN_RSP PDU if, for example, it needs to reduce power consumption or not all of the advertising data fit into the advertising PDU. Depending on its state, the device may not always perform active scanning.

The primary services should always be advertised in the advertising PDU. Secondary services should not be advertised. Services not significant to the primary use case of the accessory may be omitted if space is limited in the Advertising PDU.

The advertising data and the scan response data in the SCAN_RSP PDU should comply with the formatting guidelines in the *Bluetooth 4.0* specification, Volume 3, Part C, Section 18: it starts with a length field, followed by AD Type and AD Data.

41.5 Advertising Interval

The accessory should first use the recommended advertising interval of 20 ms for at least 30 seconds.

If it is not discovered within the initial 30 seconds, Apple recommends using one of the following longer intervals to increase chances of discovery by the device:

- 152.5 ms
- 211.25 ms
- 318.75 ms
- 417.5 ms
- 546.25 ms
- 760 ms
- 852.5 ms
- 1022.5 ms
- 1285 ms

Note:
Longer advertising intervals usually result in longer discovery and connect times, but may lower accessory power consumption.

2022-07-08 | Copyright © 2022 Apple Inc. All Rights Reserved.

41.6 Connection Parameters

The accessory is responsible for the connection parameters used for the Low Energy connection. The accessory should request connection parameters appropriate for its use case by sending an L2CAP Connection Parameter Update Request at the appropriate time. See the *Bluetooth 4.0* specification, Volume 3, Part A, Section 4.20 for details.

The connection parameter request may be rejected if it does not meet the following guidelines:

- Peripheral Latency of up to 30 connection intervals.
- Supervision Timeout from 2 seconds to 6 seconds.
- Interval Min of at least 15 ms.
- Interval Min is a multiple of 15 ms.
- One of the following:
  - Interval Max at least 15 ms greater than Interval Min.
  - Interval Max and Interval Min both set to 15 ms.
- Interval Max * (Peripheral Latency + 1) of 2 seconds or less.
- Supervision Timeout greater than Interval Max * (Peripheral Latency + 1) * 3.

> **Note:**
> If an accessory requests both an Interval Min and Interval Max of 15 ms, some devices will scale the interval to 30 ms to balance power and performance constraints.

If Bluetooth Low Energy HID is one of the connected services of an accessory, a connection interval down to 11.25 ms may be accepted by the device.

The device will not read or use the parameters in the Peripheral Preferred Connection Parameters characteristic. See the *Bluetooth 4.0* specification, Volume 3, Part C, Section 12.5.

41.7 Data Packet Length Extension

Data Packet Length Extension is an enhancement introduced in the *Bluetooth 4.2* specification which increases the maximum data length from 27 to 251. Using a longer per-packet data length improves radio efficiency, greatly increases application data rates, and boosts battery life. See the *Bluetooth 5.0* specification, Volume 6, Part B, Section 4.6.6 for details.

2022-07-08 | Copyright © 2022 Apple Inc. All Rights Reserved.

Figure 41-1 Data Packet Length Extension

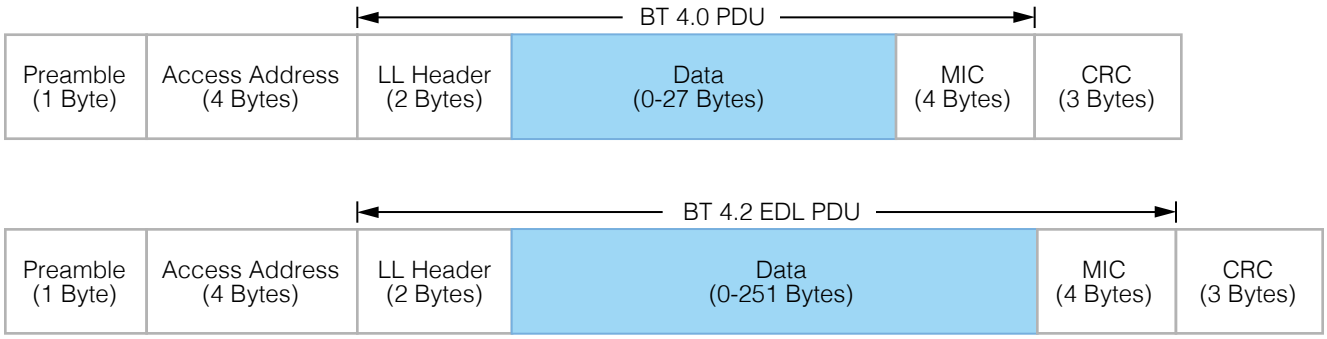

Accessories should support Data Packet Length Extension for best performance with devices.

iOS devices and Mac computers operating as the Central will negotiate optimal data packet lengths based on various factors, such as connection event length, system topology, and protocol.

41.8 Privacy

The accessory should be able to resolve a Resolvable Private Address in all situations. Due to privacy concerns, the device will use a Random Device Address as defined in the *Bluetooth 4.0* specification, Volume 3, Part C, Section 10.8.

41.9 Permissions

The accessory should not require special permissions, such as pairing, authentication, or encryption to discover services and characteristics. It may require special permissions only for access to a characteristic value or a descriptor value. See the *Bluetooth 4.0* specification, Volume 3, Part G, Section 8.1, fifth paragraph.

41.10 Pairing

The accessory should not request pairing until an ATT request is rejected using the Insufficient Authentication error code. See the *Bluetooth 4.0* specification, Volume 3, Part F, Section 4 for details.

If, for security reasons, the accessory requires a bonded relationship with the Central, the Peripheral should reject the ATT request using the Insufficient Authentication error code, as appropriate. As a result, the device may proceed with the necessary security procedures.

2022-07-08 | Copyright © 2022 Apple Inc. All Rights Reserved.

Similarly, if the device acts as a Central and a GATT server, it may reject an ATT request using the Insufficient Authentication error code. The accessory should initiate the security procedure for pairing in response.

Pairing may require user authorization depending on device. Once an accessory is paired with a device, the accessory shall retain the distributed keys of both central and peripheral for future use. If the pairing is no longer required, the accessory shall delete both sets of keys.

41.11 MTU Size

An accessory supporting packet length extension shall perform the packet length update procedure before performing the Exchange MTU Request handshake, see Data Packet Length Extension (page 188).

Devices will support and request an MTU size larger than the default during the Exchange MTU Request handshake. See the *Bluetooth 4.0* specification, Volume 3, Part F, Section 3.2.8.

When operating as ATT client, the device will request the optimal MTU size based on factors such as the Bluetooth topology, connection event length, maximum data length, and protocol (GATT or connection-oriented L2CAP).

An accessory operating as ATT server should select an MTU equal to or greater than the device's MTU request.

41.12 Services

41.12.1 Generic Access Profile Service

The accessory should implement the Device Name characteristic per the *Bluetooth 4.0* specification, Volume 3, Part C, Section 12.1. The Device Name characteristic should be writeable.

41.12.2 Generic Attribute Profile Service

The accessory shall implement the Service Changed characteristic only if the accessory has the ability to change its services during its lifetime.

The device may use the Service Changed characteristic to determine if it can rely on previously read (cached) information from the device. See the *Bluetooth 4.0* specification, Volume 3, Part G, Section 7.1.

2022-07-08 | Copyright © 2022 Apple Inc. All Rights Reserved.

41.12.3 Device Information Service

The accessory shall implement the Device Information Service. The service UUID for this service should not be advertised in the Advertising Data. The following characteristics should be supported:

- Manufacturer Name String
- Model Number String
- Firmware Revision String
- Software Revision String

41.12.4 Available Services

With iOS 7.0, any device makes Battery Service, Current Time Service and Apple Notification Center Service (ANCS) available to an accessory. The Current Time Service supports the current time and local time information characteristics. The service does not provide an "Adjust Reason" when the current time changes. ANCS uses `7905F431-B5CE-4E99-A40F-4B1E122D00D0` as its UUID.

These services are not guaranteed to be available immediately after connection and the accessory shall support Characteristic Value Indication of the Service Changed characteristic (see *Bluetooth 4.0* specification, Volume 3, Part G, Section 7.1) to be notified when the services become available. The device will maintain a connection to an accessory as long as it is paired and uses one of the available services.

41.13 GATT Server

With iOS 6.0, applications may contribute services and characteristics to the GATT server the device makes available to the accessory. The recommendations in this section apply to the accessory in this case.

The following services are implemented internally by iOS and shall not be published by third-party iOS applications:

- Generic Attribute Profile Service
- Generic Access Profile Service
- Bluetooth Low Energy HID Service
- Battery Service
- Current Time Service
- Apple Notification Center Service

The device implements the GAP Service Changed characteristic, because the database contents can change at any time. The accessory should therefore support the Characteristic Value Indication of this characteristic and, upon receiving indications, invalidate its database cache accordingly. See the *Bluetooth 4.0* specification, Volume 3, Part G, Section 7.1.

2022-07-08 | Copyright © 2022 Apple Inc. All Rights Reserved.

The accessory should minimize the use of ATT/GATT requests and commands and only send what is necessary. For example, do not use GATT Discover All Services when the accessory is looking for specific services. Use Discover Primary Service By Service UUID instead. Less airtime equals less power consumption and better performance for both the accessory and the device.

When third-party iOS applications discover services on the accessory, the following services are used internally by iOS and are filtered out from the list of discovered services:

- Generic Attribute Profile Service
- Generic Access Profile Service
- Bluetooth Low Energy HID Service
- Apple Notification Center Service

The accessory should be robust enough to handle any error gracefully. Pairing and Characteristic Value reads/writes may fail if the application owning the service is not in the foreground and is not entitled to run in the background.

If an ATT Prepare Write Request is used, all queued attributes are contained within the same GATT Service.

2022-07-08 | Copyright © 2022 Apple Inc. All Rights Reserved.

Connectors

42. USB-A Receptacle

Accessories may incorporate a USB-A receptacle to:

- Provide power to a device.

42.1 Mechanical

The USB-A receptacle shall meet or exceed all applicable USB-IF mechanical specifications.

42.2 Electrical

The USB-A receptacle shall meet or exceed all applicable USB-IF electrical specifications.

2022-07-08 | Copyright © 2022 Apple Inc. All Rights Reserved.

43. USB-C Plug

Accessories may incorporate a USB-C plug to:

- Draw power from Apple branded or MFi certified USB power sources.
- Draw power from USB-C Current sources.
- Draw power from USB Power Delivery sources.
- Draw power from USB Dedicated Charging Ports and USB hosts, such as a Mac.
- Enable USB connection to a Mac.

Examples of accessories that may benefit from including a USB-C plug include cables, battery packs, and adapters.

43.1 Mechanical

The USB-C plug shall have an assigned *Connector* Test ID from the USB-IF.

43.2 Electrical

Accessories shall not directly electrically connect a USB-C plug to the device.

Accessories that draw power from the USB-C plug shall:

- Correctly identify all Apple branded or MFi certified USB power sources that use USB D+/D- Resistor Networks (page 160).
- Correctly identify all USB Dedicated Charging Ports (DCP) as defined in the *USB Battery Charging 1.2* specification.
- Correctly identify all USB-C Current (page 164) sources.
- Enumerate as a USB device when connected to a USB host, such as a Mac, and:
  - Not draw more than 100 mA of current until they have been successfully enumerated.
  - Request no more than 500 mA of charging current in their USB device descriptor.
- Not draw more power than the USB power source claims it is capable of providing via one of the above methods.

Accessories may also correctly identify all USB Power Delivery (page 163) sources.

Copyright © 2022 Apple Inc. All Rights Reserved.

43.3 Test Procedures

43.3.1 Connector Test ID

Verify that the accessory's USB-C plug has an assigned *Connector* Test ID from the USB-IF.

43.3.2 Drawing Power

This procedure applies to accessories that draw power via the USB-C plug.

The following equipment is needed:

- Apple 29W USB-C Power Adapter
- Bundled USB-C power adapter (if applicable)

Verify that the accessory correctly identifies all Apple branded or bundled power sources:

1. Verify that each USB-C power adapter is correctly identified and provides power.

Verify that the accessory correctly identifies a Mac:

1. Verify that the Mac is correctly identified and provides power.

2022-07-08 | Copyright © 2022 Apple Inc. All Rights Reserved.

44. USB-C Receptacle

Accessories may incorporate a USB-C receptacle to:

- Provide power to a device.
- Draw power from Apple branded or MFi certified USB power sources.
- Draw power from USB-C Current sources.
- Draw power from USB Power Delivery sources.
- Draw power from USB Dedicated Charging Ports and USB hosts, such as a Mac.
- Enable USB connection to a Mac.

Accessories shall not integrate a USB-C receptacle to enable passthrough USB charge/sync of a device.

Examples of accessories that may benefit from including a USB-C receptacle include AC Power Adapters (page 64), Battery Packs (page 67), and speakers.

44.1 Mechanical

The USB-C receptacle shall be USB-IF certified and have a *Connector* Test ID from the USB-IF.

44.2 Electrical

Accessories shall not directly electrically connect a USB-C receptacle to the device.

44.2.1 Drawing Power

Accessories that draw power from the USB-C receptacle shall:

- Correctly identify all Apple branded or MFi certified USB power sources that use USB D+/D- Resistor Networks (page 160).
- Correctly identify all USB Dedicated Charging Ports (DCP) as defined in the *USB Battery Charging 1.2* specification.
- Correctly identify all USB-C Current (page 164) sources.
- Enumerate as a USB device when connected to a USB host, such as a Mac, and:
  - Not draw more than 100 mA of current until they have been successfully enumerated.
  - Request no more than 500 mA of charging current in their USB device descriptor.

2022-07-08 | Copyright © 2022 Apple Inc. All Rights Reserved.

- Not draw more power than the USB power source claims it is capable of providing via one of the above methods.

Accessories may also correctly identify all USB Power Delivery (page 163) sources.

44.2.2 Providing Power

Accessories that provide power to a device via a USB-C receptacle:

- Shall provide at least 15 W (3 A at 5.0 V) of power.
- Shall support USB-C Current (page 164).
- Should support USB Power Delivery (page 163).
- Should label the receptacle indicating how much power is supplied in watts.

44.3 Test Procedures

44.3.1 Connector Test ID

Verify that the accessory's USB-C receptacle has an assigned *Connector* Test ID from the USB-IF.

44.3.2 Drawing Power

This procedure applies to accessories that draw power via the USB-C receptacle.

The following equipment is needed:

- Apple USB-C Charge Cable (1 m)
- Apple USB-C Charge Cable (2 m)
- Bundled USB-C to USB-C cable (if applicable)
- Bundled USB-A to USB-C cable (if applicable)
- 3rd-party USB-A to USB-C cable
- Apple 5W USB Power Adapter
- Apple 10W USB Power Adapter
- Apple 18W USB Power Adapter
- Apple 12W USB Power Adapter
- Apple 29W USB-C Power Adapter
- Apple 30W USB-C Power Adapter
- Bundled USB-C power adapter (if applicable)
- Bundled USB-A power adapter (if applicable)
- MFi USB-C power adapter(s)
- MFi USB-A power adapter(s)

2022-07-08 | Copyright © 2022 Apple Inc. All Rights Reserved.

Verify that the accessory correctly identifies all Apple branded or bundled power adapters:

1. Using each USB-A to USB-C cable, verify that each USB-A power adapter is correctly identified and provides power.
2. Using each USB-C to USB-C cable, verify that each USB-C power adapter is correctly identified and provides power.

Verify that the accessory correctly identifies a Mac:

1. Using each USB-A to USB-C cable and USB-C to USB-C cable, verify that the Mac is correctly identified and provides power.

Verify that the accessory correctly identifies MFi power adapters:

1. Using each USB-A to USB-C cable, verify that each MFi USB-A power adapter is correctly identified and provides power.
2. Using each USB-C to USB-C cable, verify that each MFi USB-C power adapter is correctly identified and provides power.

44.3.3 Providing Power

This procedure applies to accessories that provide power via the USB-C receptacle.

The following equipment is needed:

- Apple USB-C to Lightning Cable (1 m)
- Apple USB-C to Lightning Cable (2 m)
- Apple USB-C Charge Cable (1 m)
- Apple USB-C Charge Cable (2 m)
- Bundled USB-C to USB-C cable (if applicable)

Verify that the accessory correctly provides power to devices:

1. Using each USB-C to Lightning cable, verify that the accessory uses USB-C Current or USB-PD to identify at least 15 W of power providing capability.
2. Using each USB-C to Lightning cable, verify that the accessory provides power to the device.

Verify that the accessory correctly identifies a Mac:

1. Using each USB-C to USB-C cable, verify that the accessory is correctly identified and provides power to the Mac.

2022-07-08 | Copyright © 2022 Apple Inc. All Rights Reserved.

References

45. Device Dimensional Drawings

This chapter contains the following dimensional drawings:

- iPhone SE (3rd generation) and iPhone SE (2nd generation) (page 221)
- iPhone 13 Pro Max 1 of 2 (page 205)
- iPhone 13 Pro Max 2 of 2 (page 206)
- iPhone 13 Pro 1 of 2 (page 207)
- iPhone 13 Pro 2 of 2 (page 208)
- iPhone 13 1 of 2 (page 209)
- iPhone 13 2 of 2 (page 210)
- iPhone 13 mini 1 of 2 (page 211)
- iPhone 13 mini 2 of 2 (page 212)
- iPhone 12 Pro Max 1 of 2 (page 213)
- iPhone 12 Pro Max 2 of 2 (page 214)
- iPhone 12 Pro 1 of 2 (page 215)
- iPhone 12 Pro 2 of 2 (page 216)
- iPhone 12 1 of 2 (page 217)
- iPhone 12 2 of 2 (page 218)
- iPhone 12 mini 1 of 2 (page 219)
- iPhone 12 mini 2 of 2 (page 220)
- iPhone 11 Pro Max (page 222)
- iPhone 11 Pro (page 223)
- iPhone 11 (page 224)
- iPhone XS Max (page 225)
- iPhone XS (page 226)
- iPhone XR (page 227)
- iPhone X (page 228)
- iPhone 8 Plus (page 229)
- iPhone 8 (page 230)
- iPhone 7 Plus (page 231)
- iPhone 7 (page 232)
- iPhone 6s Plus (page 233)
- iPhone 6s (page 234)
- iPhone 6 Plus (page 235)
- iPhone 6 (page 236)
- iPhone 5s and iPhone SE (page 237)

2022-07-08 | Copyright © 2022 Apple Inc. All Rights Reserved.

- iPhone 5c (page 238)
- iPhone 5 (page 239)
- iPad Air (5th generation) and iPad Air (4th generation) 1 of 5 (page 240)
- iPad Air (5th generation) and iPad Air (4th generation) 2 of 5 (page 241)
- iPad Air (5th generation) and iPad Air (4th generation) 3 of 5 (page 242)
- iPad Air (5th generation) and iPad Air (4th generation) 4 of 5 (page 243)
- iPad Air (5th generation) and iPad Air (4th generation) 5 of 5 (page 244)
- iPad mini (6th generation) 1 of 6 (page 245)
- iPad mini (6th generation) 2 of 6 (page 246)
- iPad mini (6th generation) 3 of 6 (page 247)
- iPad mini (6th generation) 4 of 6 (page 248)
- iPad mini (6th generation) 5 of 6 (page 249)
- iPad mini (6th generation) 6 of 6 (page 250)
- iPad (9th generation), iPad (8th generation) and iPad (7th generation) 1 of 4 (page 251)
- iPad (9th generation), iPad (8th generation) and iPad (7th generation) 2 of 4 (page 252)
- iPad (9th generation), iPad (8th generation) and iPad (7th generation) 3 of 4 (page 253)
- iPad (9th generation), iPad (8th generation) and iPad (7th generation) 4 of 4 (page 254)
- iPad Pro (12.9-inch) 5th Generation 1 of 5 (page 255)
- iPad Pro (12.9-inch) 5th Generation 2 of 5 (page 256)
- iPad Pro (12.9-inch) 5th Generation 3 of 5 (page 257)
- iPad Pro (12.9-inch) 5th Generation 4 of 5 (page 258)
- iPad Pro (12.9-inch) 5th Generation 5 of 5 (page 259)
- iPad Pro (11-inch) 3rd Generation 1 of 5 (page 260)
- iPad Pro (11-inch) 3rd Generation 2 of 5 (page 261)
- iPad Pro (11-inch) 3rd Generation 3 of 5 (page 262)
- iPad Pro (11-inch) 3rd Generation 4 of 5 (page 263)
- iPad Pro (11-inch) 3rd Generation 5 of 5 (page 264)
- iPad Pro (12.9-inch) 4th Generation 1 of 5 (page 265)
- iPad Pro (12.9-inch) 4th Generation 2 of 5 (page 266)
- iPad Pro (12.9-inch) 4th Generation 3 of 5 (page 267)
- iPad Pro (12.9-inch) 4th Generation 4 of 5 (page 268)
- iPad Pro (12.9-inch) 4th Generation 5 of 5 (page 269)
- iPad Pro (11-inch) 2nd Generation 1 of 5 (page 270)
- iPad Pro (11-inch) 2nd Generation 2 of 5 (page 271)
- iPad Pro (11-inch) 2nd Generation 3 of 5 (page 272)
- iPad Pro (11-inch) 2nd Generation 4 of 5 (page 273)
- iPad Pro (11-inch) 2nd Generation 5 of 5 (page 274)
- iPad Air (3rd generation) with Wi-Fi 1 of 3 (page 275)
- iPad Air (3rd generation) with Wi-Fi 2 of 3 (page 276)
- iPad Air (3rd generation) with Wi-Fi 3 of 3 (page 277)

2022-07-08 | Copyright © 2022 Apple Inc. All Rights Reserved.

- iPad Air (3rd generation) with Wi-Fi + Cellular 1 of 3 (page 278)
- iPad Air (3rd generation) with Wi-Fi + Cellular 2 of 3 (page 279)
- iPad Air (3rd generation) with Wi-Fi + Cellular 3 of 3 (page 280)
- iPad mini (5th generation) with Wi-Fi 1 of 3 (page 281)
- iPad mini (5th generation) with Wi-Fi 2 of 3 (page 282)
- iPad mini (5th generation) with Wi-Fi 3 of 3 (page 283)
- iPad mini (5th generation) with Wi-Fi + Cellular 1 of 3 (page 284)
- iPad mini (5th generation) with Wi-Fi + Cellular 2 of 3 (page 285)
- iPad mini (5th generation) with Wi-Fi + Cellular 3 of 3 (page 286)
- iPad Pro (12.9-inch) 3rd Generation 1 of 3 (page 287)
- iPad Pro (12.9-inch) 3rd Generation 2 of 3 (page 288)
- iPad Pro (12.9-inch) 3rd Generation 3 of 3 (page 289)
- iPad Pro (11-inch) 1 of 3 (page 290)
- iPad Pro (11-inch) 2 of 3 (page 291)
- iPad Pro (11-inch) 3 of 3 (page 292)
- iPad Pro (12.9-inch) 2nd Generation with Wi-Fi (page 293)
- iPad Pro (12.9-inch) 2nd Generation with Wi-Fi + Cellular (page 294)
- iPad Pro (12.9-inch) 2nd Generation Magnet/Hall Effect Sensors 1 of 2 (page 295)
- iPad Pro (12.9-inch) 2nd Generation Magnet/Hall Effect Sensors 2 of 2 (page 296)
- iPad Pro (10.5-inch) with Wi-Fi (page 297)
- iPad Pro (10.5-inch) with Wi-Fi + Cellular (page 298)
- iPad Pro (10.5-inch) Magnet/Hall Effect Sensors 1 of 2 (page 299)
- iPad Pro (10.5-inch) Magnet/Hall Effect Sensors 2 of 2 (page 300)
- iPad (5th and 6th generation) with Wi-Fi + Cellular (page 301)
- iPad (5th and 6th generation) Magnet/Hall Effect Sensors 1 of 2 (page 302)
- iPad (5th and 6th generation) Magnet/Hall Effect Sensors 2 of 2 (page 303)
- iPad Pro (9.7-inch) with Wi-Fi (page 304)
- iPad Pro (9.7-inch) with Wi-Fi + Cellular (page 305)
- iPad Pro (9.7-inch) Magnet/Hall Effect Sensors 1 of 2 (page 306)
- iPad Pro (9.7-inch) Magnet/Hall Effect Sensors 2 of 2 (page 307)
- iPad Pro (12.9-inch) 1st Generation with Wi-Fi (page 308)
- iPad Pro (12.9-inch) 1st Generation with Wi-Fi + Cellular (page 309)
- iPad Pro (12.9-inch) 1st Generation Magnet/Hall Effect Sensors 1 of 2 (page 310)
- iPad Pro (12.9-inch) 1st Generation Magnet/Hall Effect Sensors 2 of 2 (page 311)
- iPad mini 4 with Wi-Fi (page 312)
- iPad mini 4 with Wi-Fi + Cellular (page 313)
- iPad mini 4 Magnet/Hall Effect Sensors (page 314)
- iPad Air 2 with Wi-Fi (page 315)
- iPad Air 2 with Wi-Fi + Cellular (page 316)
- iPad mini 2 and iPad mini 3 with Wi-Fi (page 317)

2022-07-08 | Copyright © 2022 Apple Inc. All Rights Reserved.

- iPad mini 2 and iPad mini 3 with Wi-Fi + Cellular (page 318)
- iPad Air with Wi-Fi (page 319)
- iPad Air with Wi-Fi + Cellular (page 320)
- iPad mini with Wi-Fi (page 321)
- iPad mini with Wi-Fi + Cellular (page 322)
- iPad (4th generation) with Wi-Fi (page 323)
- iPad (4th generation) with Wi-Fi + Cellular (page 324)
- iPod touch (6th generation) and iPod touch (7th generation) (page 325)
- iPod touch (5th generation) (page 326)
- Apple Watch Series 7, 45 mm (page 327)
- Apple Watch Series 7, 41 mm (page 328)
- Apple Watch Series 6, 44 mm (page 329)
- Apple Watch Series 6, 40 mm (page 330)
- Apple Watch SE, 44 mm (page 331)
- Apple Watch SE, 40 mm (page 332)
- Apple Watch Series 5, 44 mm (page 333)
- Apple Watch Series 5, 40 mm (page 334)
- Apple Watch Series 5 Ceramic, 44 mm (page 335)
- Apple Watch Series 5 Ceramic, 40 mm (page 336)
- Apple Watch Series 4, 44 mm (page 337)
- Apple Watch Series 4, 40 mm (page 338)
- Apple Watch Series 3 Ceramic, 42 mm (page 339)
- Apple Watch Series 3 Ceramic, 38 mm (page 340)
- Apple Watch Series 3 Metal, 42 mm (page 341)
- Apple Watch Series 3 Metal, 38 mm (page 342)
- Apple Watch Series 2 Ceramic, 42 mm (page 343)
- Apple Watch Series 2 Ceramic, 38 mm (page 344)
- Apple Watch Series 2 Metal, 42 mm (page 345)
- Apple Watch Series 2 Metal, 38 mm (page 346)
- Apple Watch (1st generation) and Apple Watch Series 1, 42 mm (page 347)
- Apple Watch (1st generation) and Apple Watch Series 1, 38 mm (page 348)
- AirPods (3rd generation) MagSafe Charging Case (page 349)
- AirPods Pro Wireless Charging Case (page 350)
- AirPods Wireless Charging Case (page 351)
- AirPods (3rd generation) (page 352)
- AirPods Pro (page 353)
- AirPods (1st generation) and AirPods (2nd generation) (page 354)
- AirTag (page 355)
- Siri Remote (2nd generation) (page 356)

2022-07-08 | Copyright © 2022 Apple Inc. All Rights Reserved.

45.1 iPhone 13 Pro Max 1 of 2

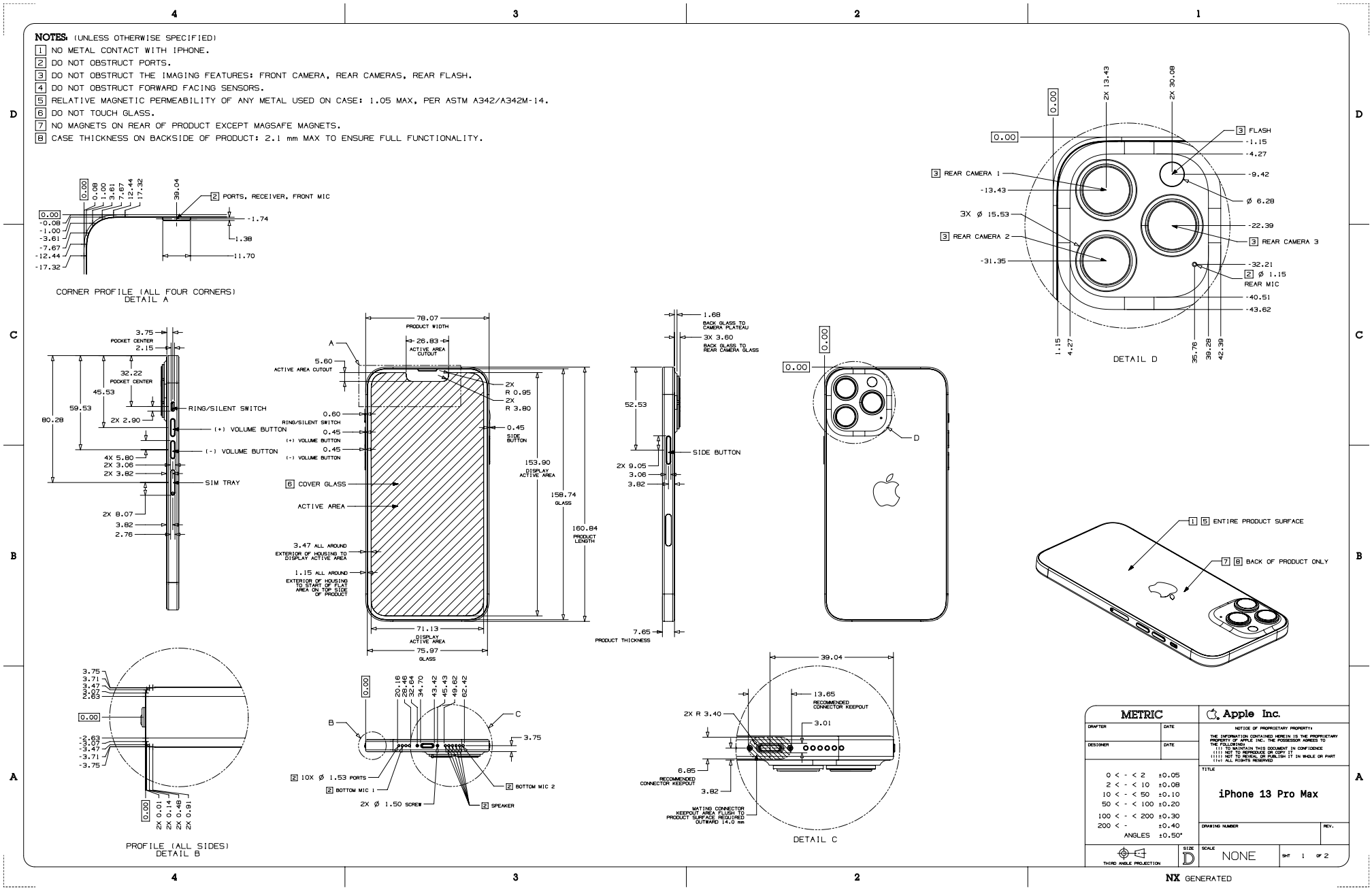

45.2 iPhone 13 Pro Max 2 of 2

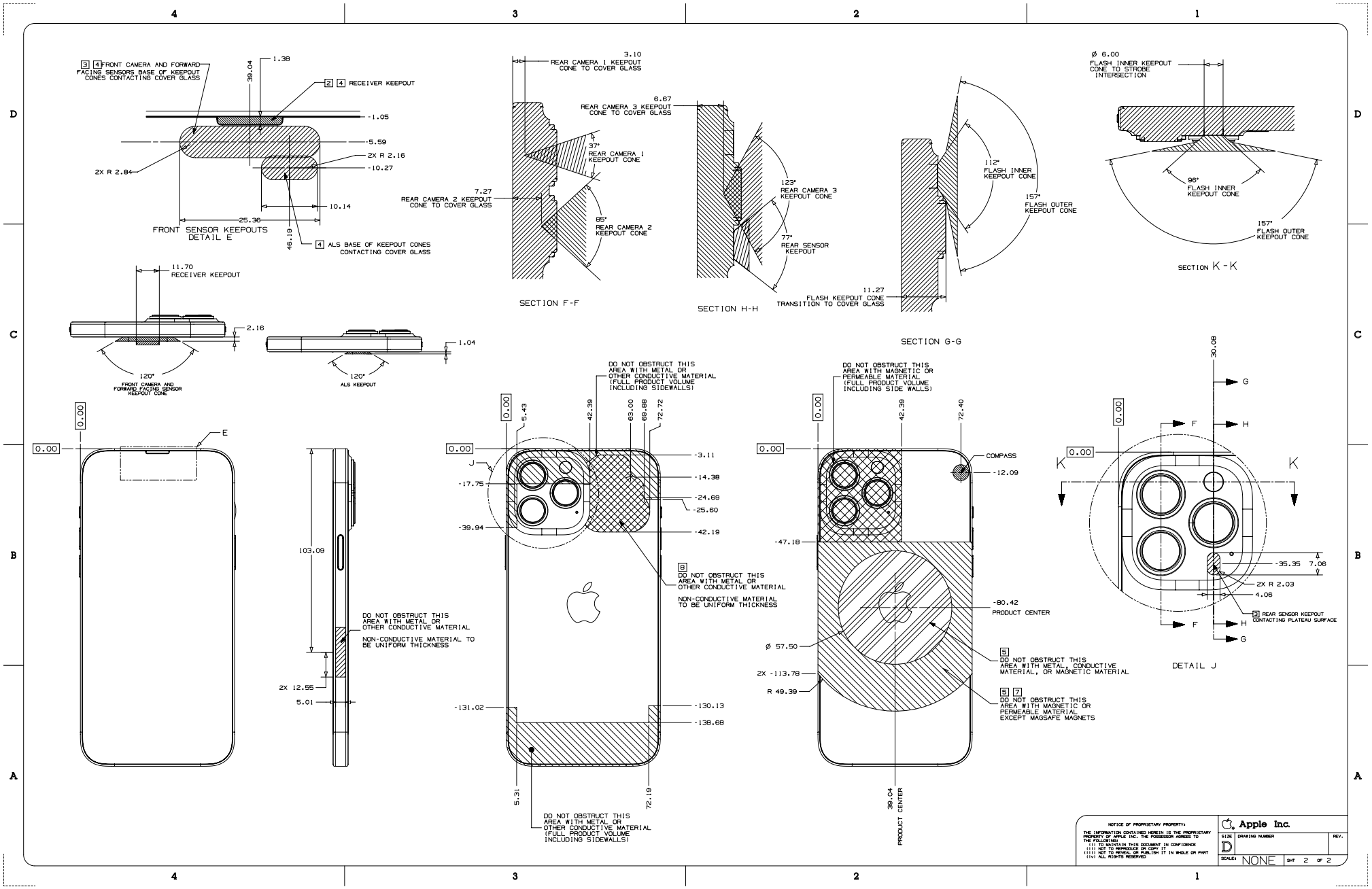

45.3 iPhone 13 Pro 1 of 2

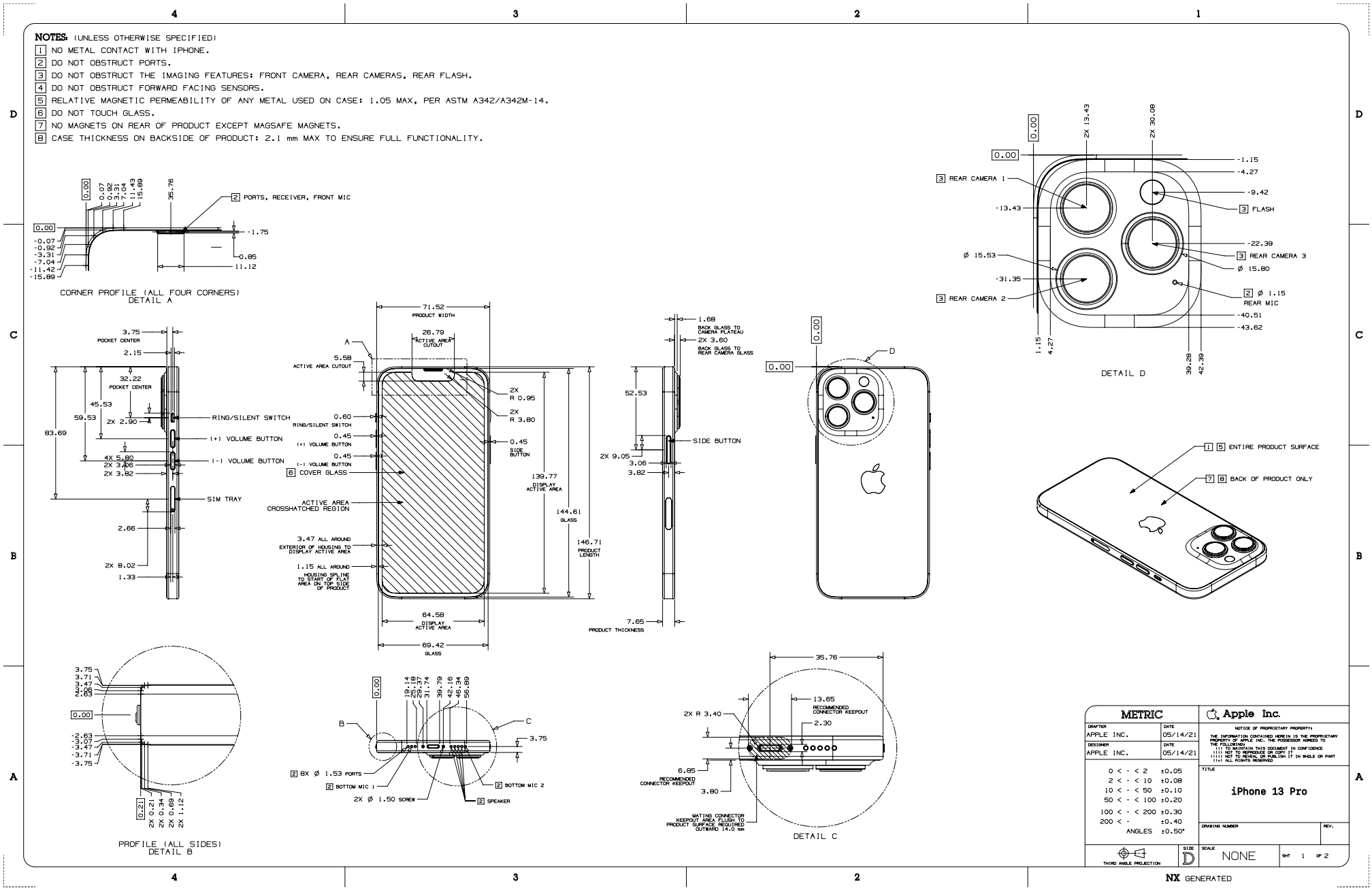

45.4 iPhone 13 Pro 2 of 2

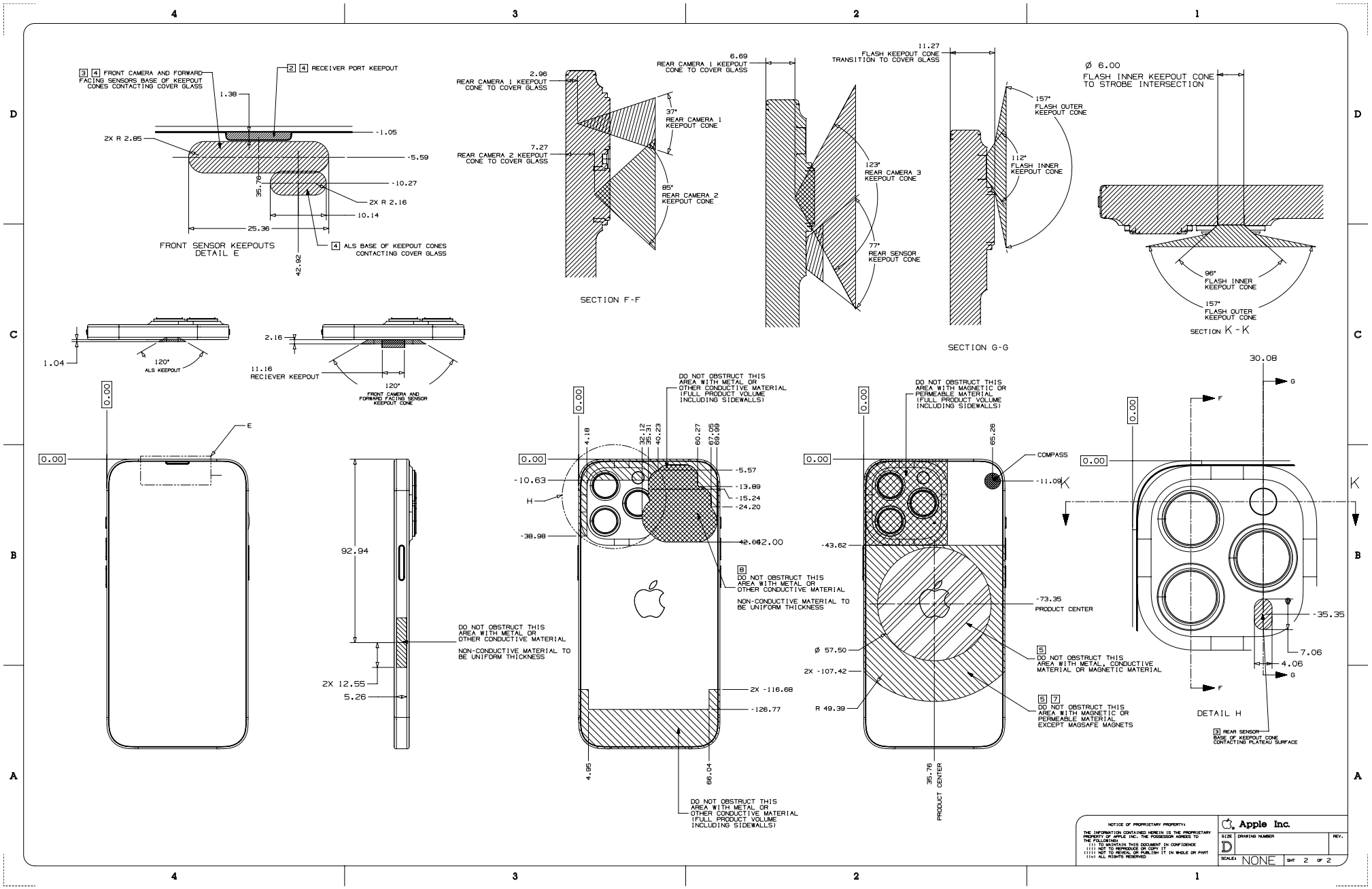

45.5 iPhone 13 1 of 2

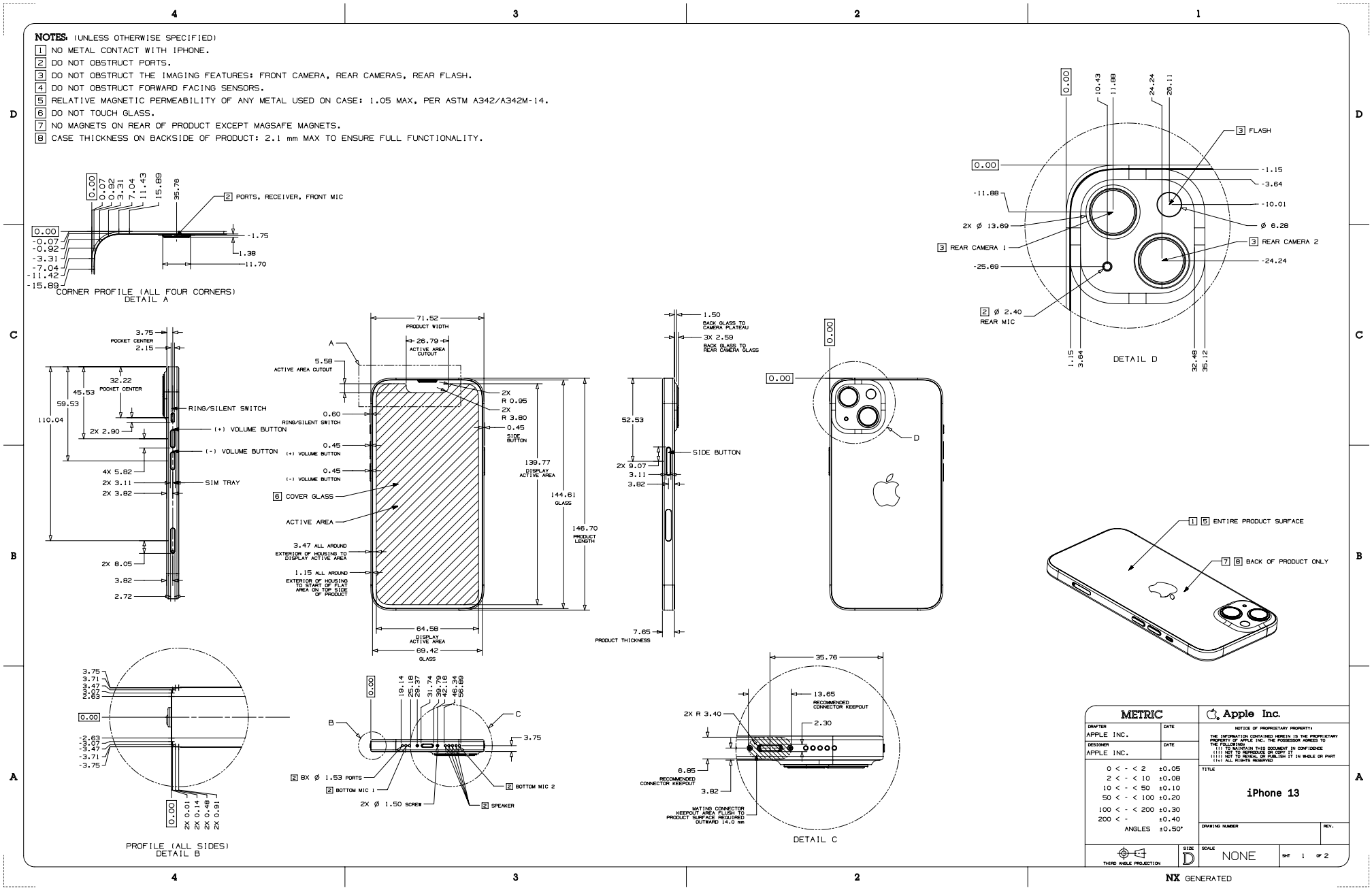

45.6 iPhone 13 2 of 2

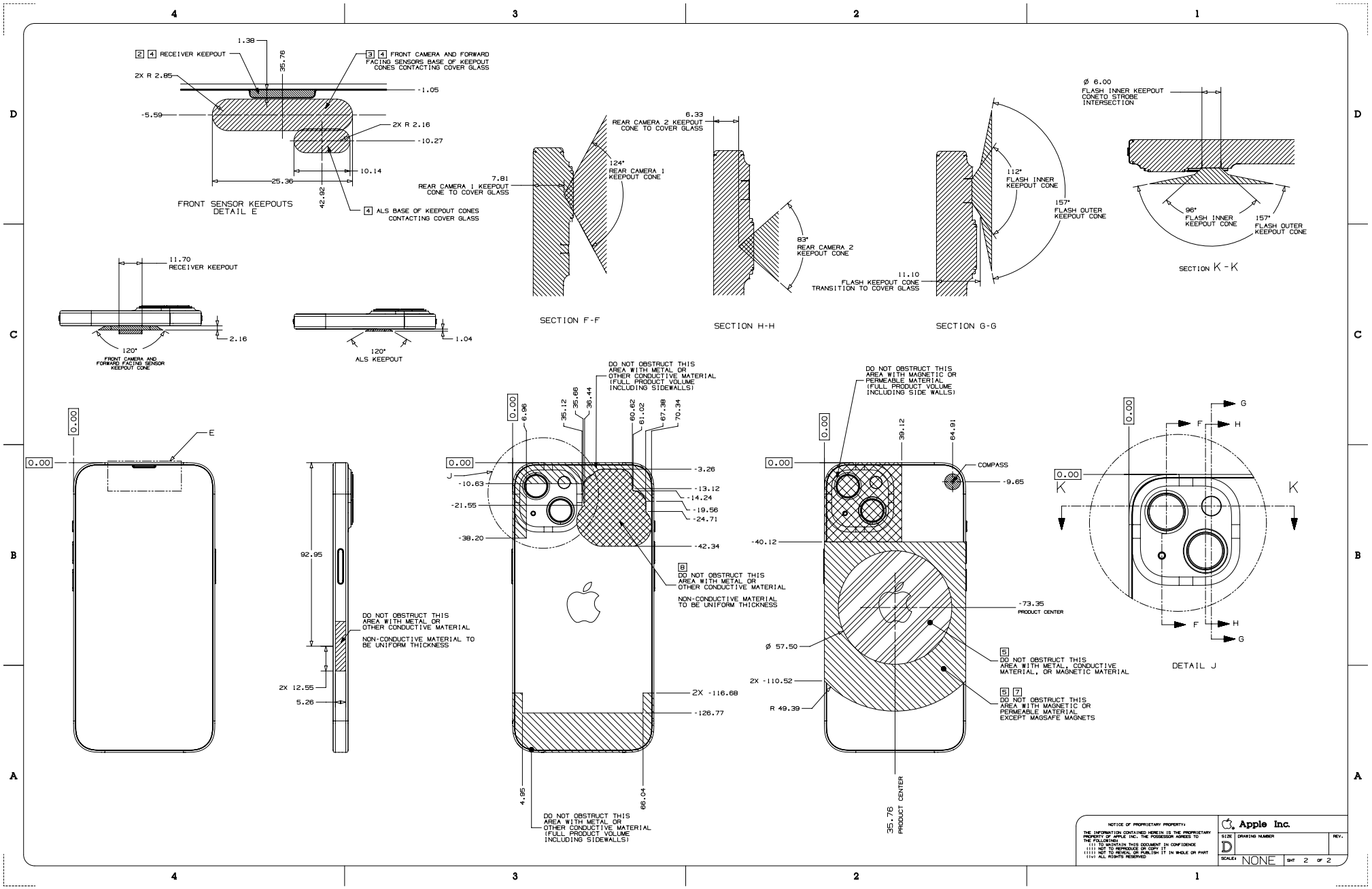

45.7 iPhone 13 mini 1 of 2

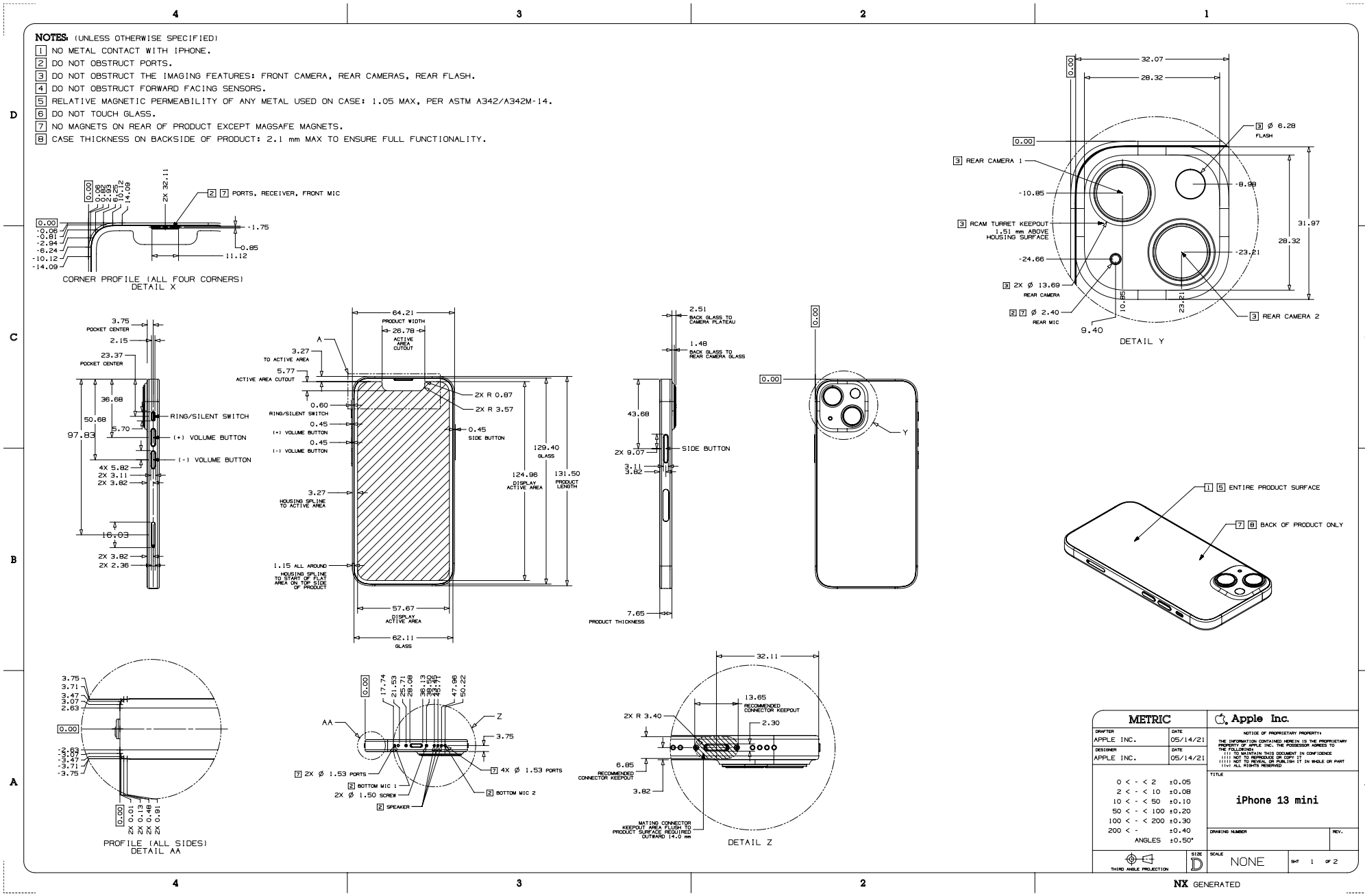

45.8 iPhone 13 mini 2 of 2

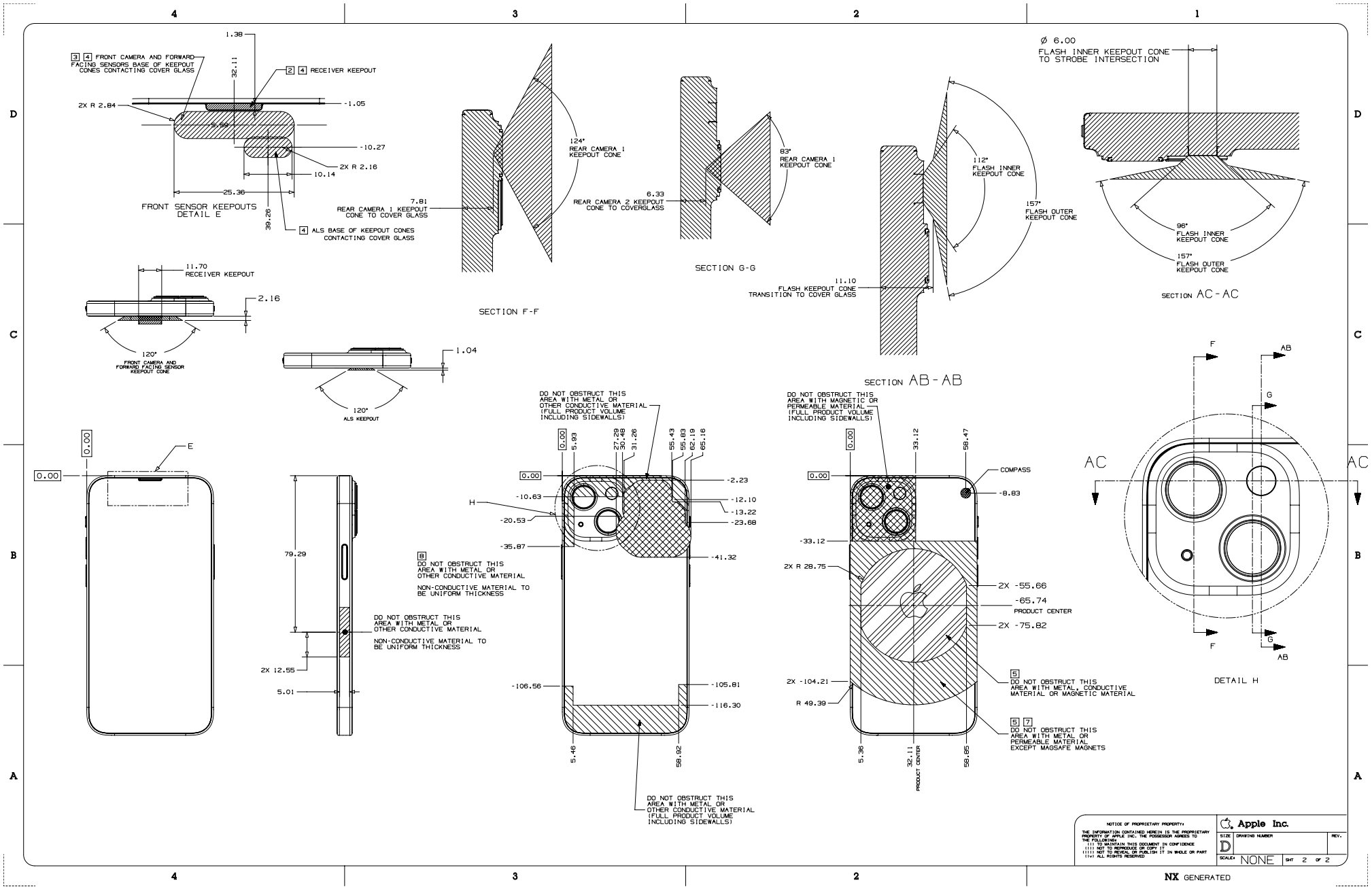

45.9 iPhone 12 Pro Max 1 of 2

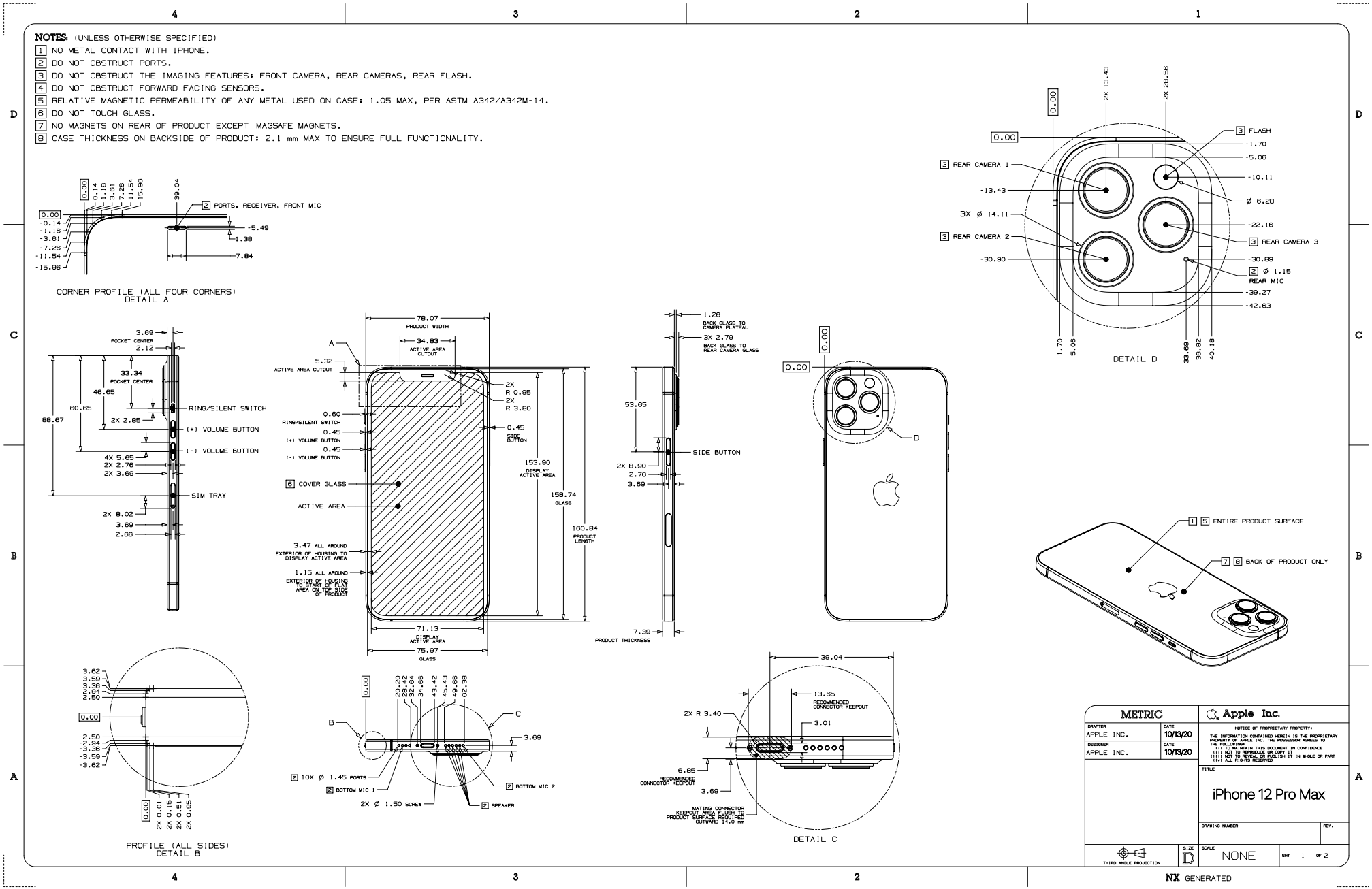

45.10 iPhone 12 Pro Max 2 of 2

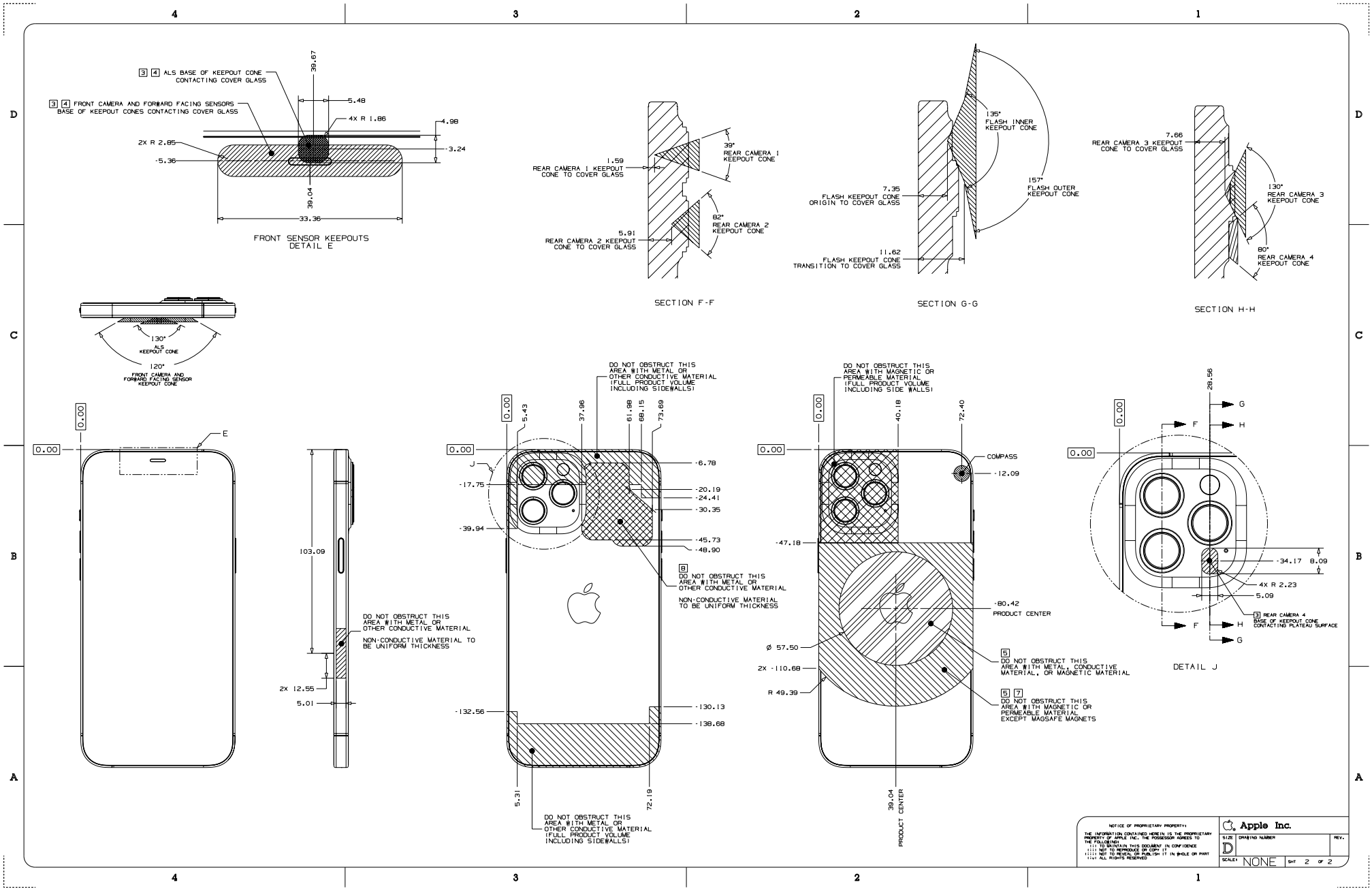

45.11 iPhone 12 Pro 1 of 2

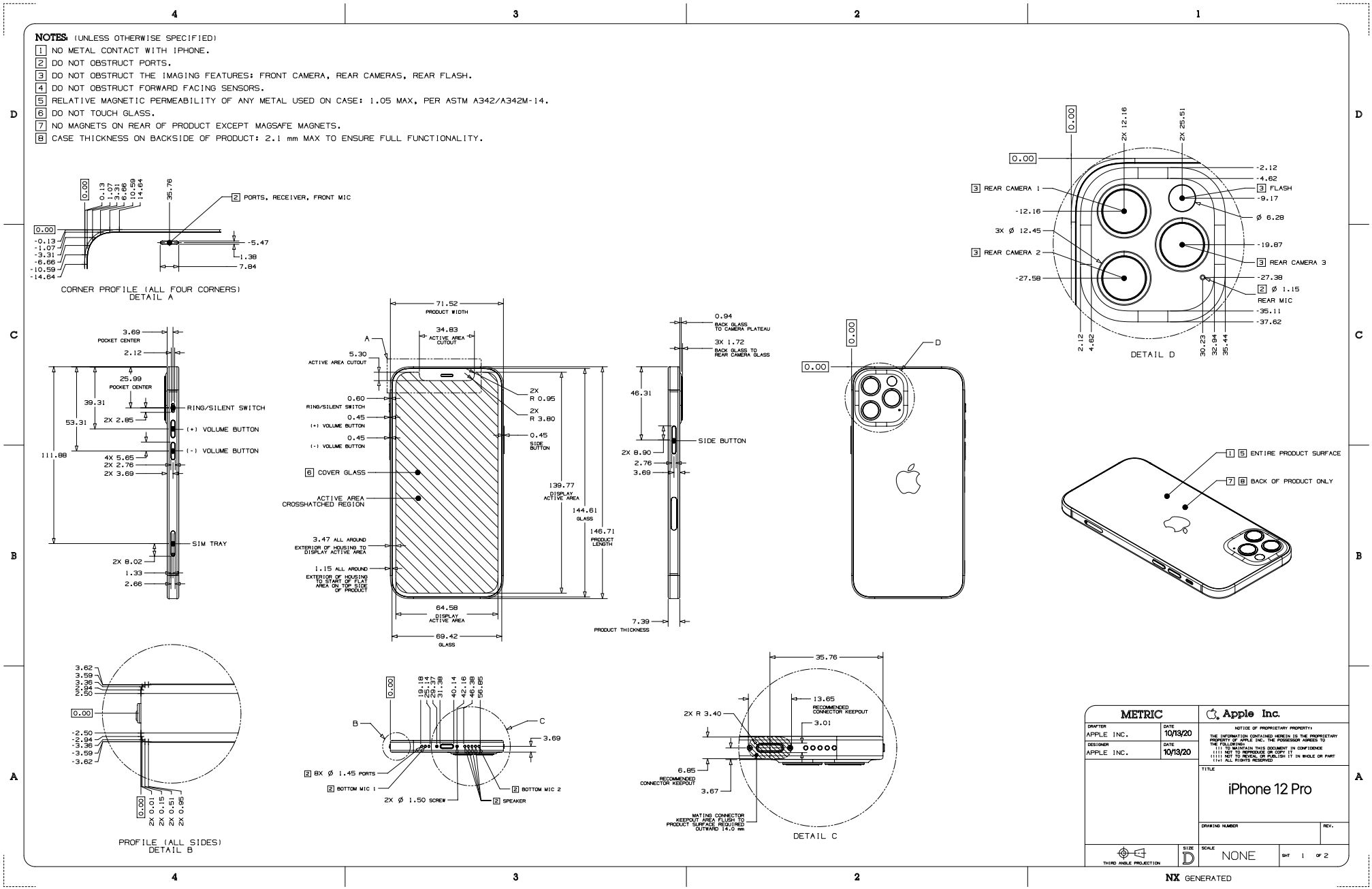

45.12 iPhone 12 Pro 2 of 2

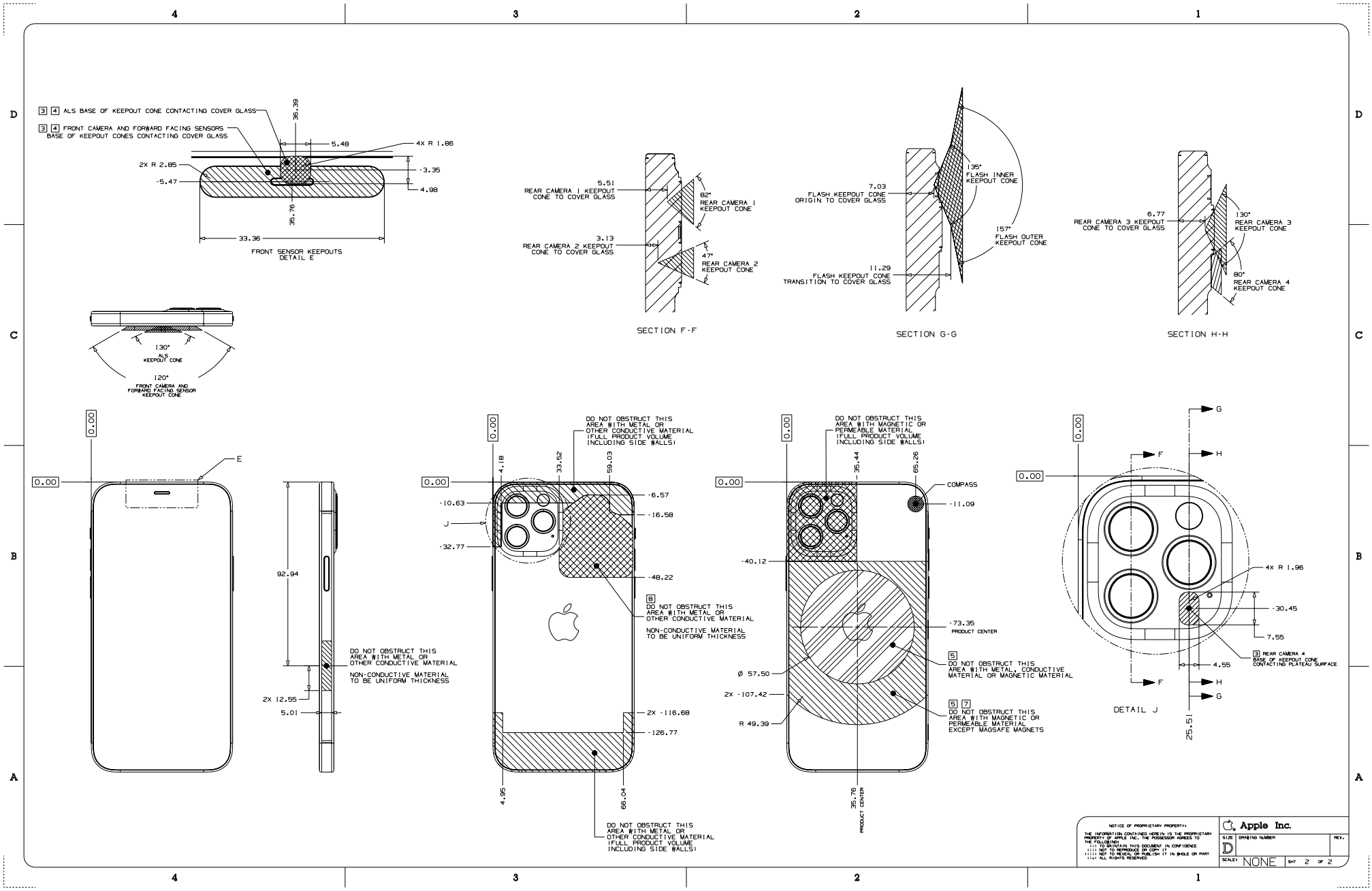

45.13 iPhone 12 1 of 2

NOTES: (UNLESS OTHERWISE SPECIFIED)

1. NO METAL CONTACT WITH IPHONE.
2. DO NOT OBSTRUCT PORTS.
3. DO NOT OBSTRUCT THE IMAGING FEATURES: FRONT CAMERA, REAR CAMERAS, REAR FLASH.
4. DO NOT OBSTRUCT FORWARD FACING SENSORS.
5. RELATIVE MAGNETIC PERMEABILITY OF ANY METAL USED ON CASE: 1.05 MAX, PER ASTM A342/A342M-14.
6. DO NOT TOUCH GLASS.
7. NO MAGNETS ON REAR OF PRODUCT EXCEPT MAGSAFE MAGNETS.
8. CASE THICKNESS ON BACKSIDE OF PRODUCT: 2.1 mm MAX TO ENSURE FULL FUNCTIONALITY.

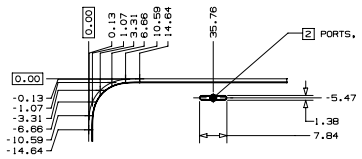

CORNER PROFILE (ALL FOUR CORNERS)
DETAIL A

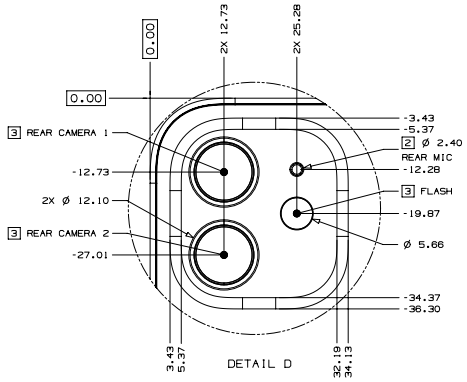

DETAIL D

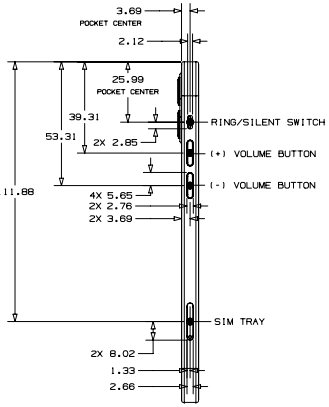

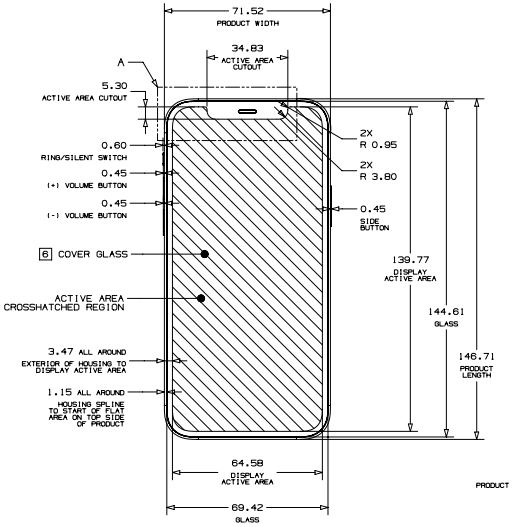

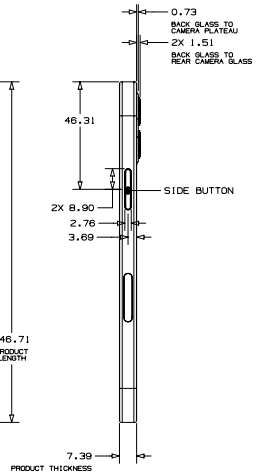

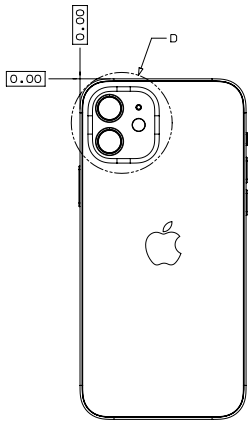

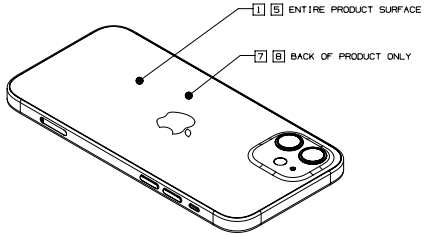

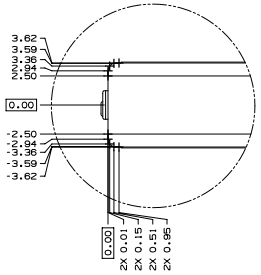

PROFILE (ALL SIDES)
DETAIL B

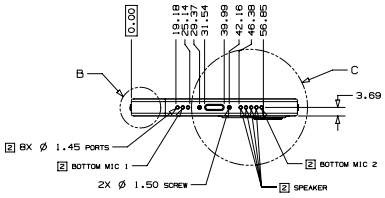

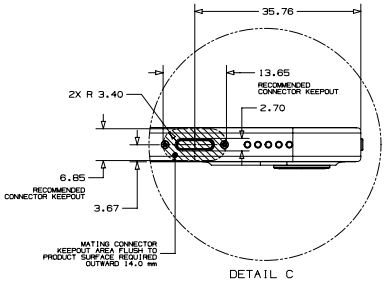

DETAIL C

METRIC		Apple Inc.
DRAWER: APPLE INC.	DATE: 10/13/20	NOTICE OF PROPRIETARY PROPERTY: THE INFORMATION CONTAINED HEREIN IS THE PROPRIETARY PROPERTY OF APPLE INC. THE POSSESSOR AGREES TO THE FOLLOWING: (i) TO MAINTAIN THIS DOCUMENT IN CONFIDENCE (ii) TO REFRAIN FROM COPY IT (iii) NOT TO REVEAL OR PUBLISH IT IN WHOLE OR PART (iv) ALL RIGHTS RESERVED
DESIGNER: APPLE INC.	DATE: 10/13/20	TITLE: iPhone 12
		DRAWING NUMBER / REV.
THIRD ANGLE PROJECTION	SIZE: D	SCALE: NONE / SHT 1 OF 2

NX GENERATED

45.14 iPhone 12 2 of 2

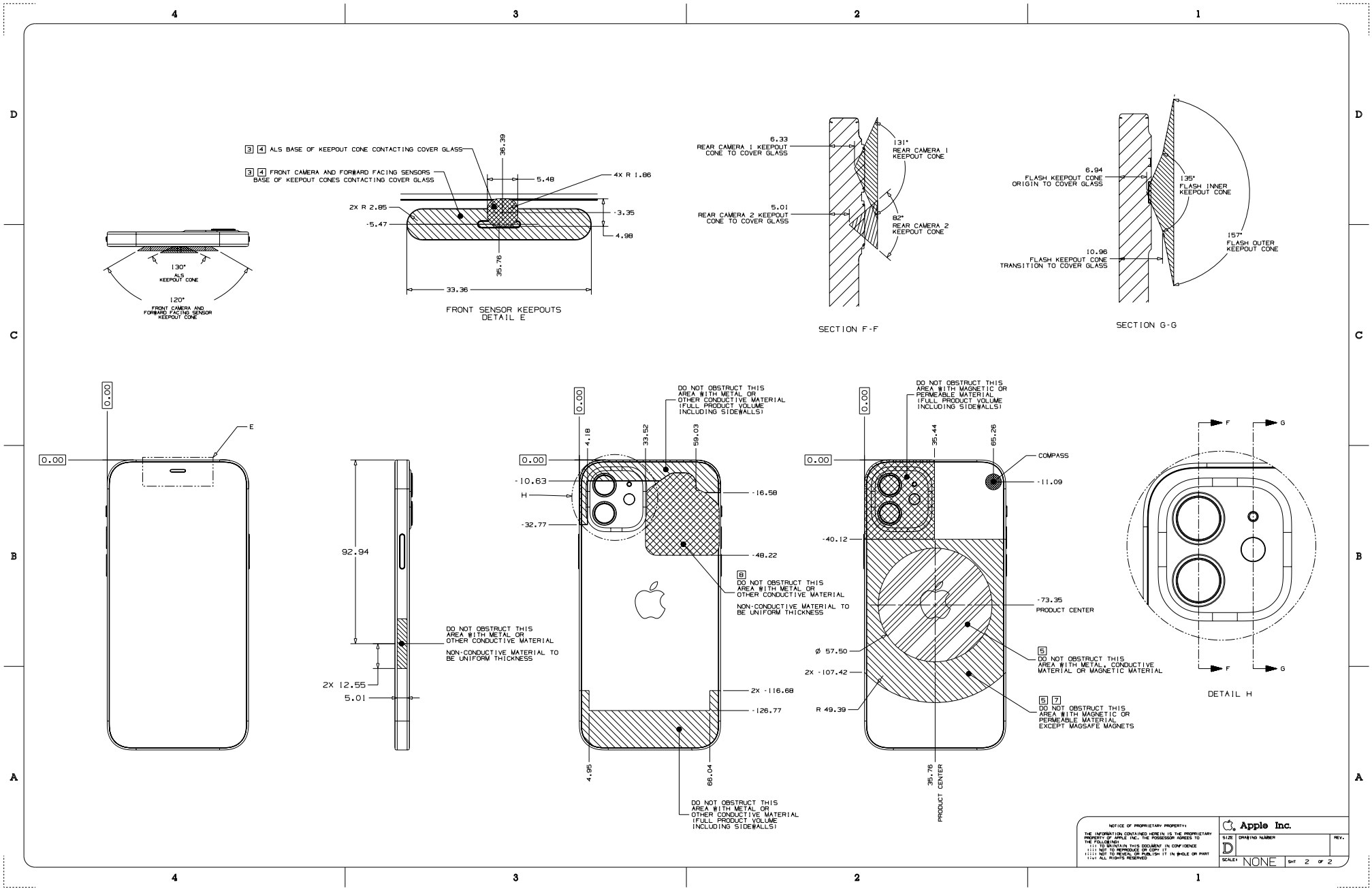

45.15 iPhone 12 mini 1 of 2

NOTES: (UNLESS OTHERWISE SPECIFIED)

1. NO METAL CONTACT WITH IPHONE.
2. DO NOT OBSTRUCT PORTS.
3. DO NOT OBSTRUCT THE IMAGING FEATURES: FRONT CAMERA, REAR CAMERAS, REAR FLASH.
4. DO NOT OBSTRUCT FORWARD FACING SENSORS.
5. RELATIVE MAGNETIC PERMEABILITY OF ANY METAL USED ON CASE: 1.05 MAX, PER ASTM A342/A342M-14.
6. DO NOT TOUCH GLASS.
7. NO MAGNETS ON REAR OF PRODUCT EXCEPT MAGSAFE MAGNETS.
8. CASE THICKNESS ON BACKSIDE OF PRODUCT: 2.1 mm MAX TO ENSURE FULL FUNCTIONALITY.

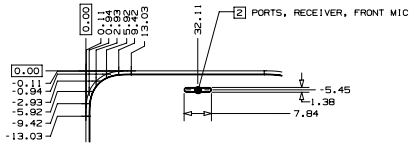

CORNER PROFILE (ALL FOUR CORNERS)
DETAIL A

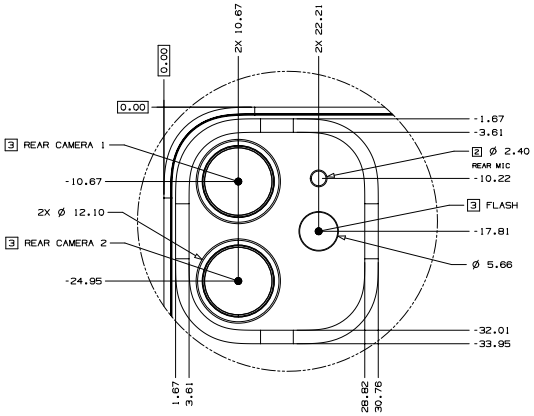

DETAIL D

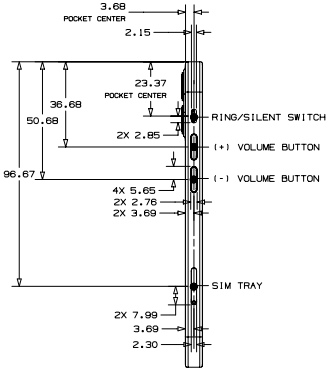

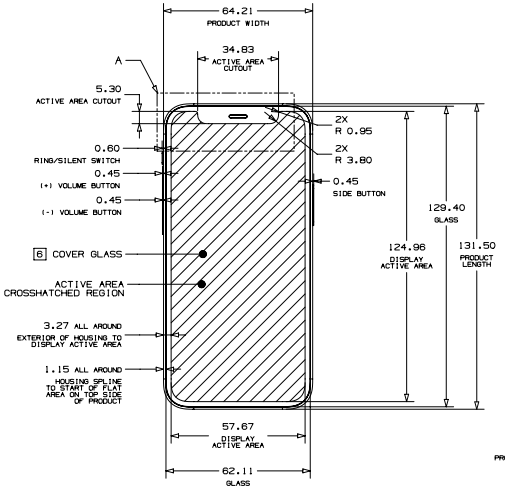

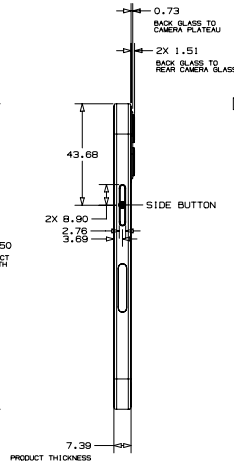

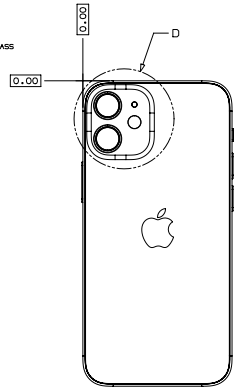

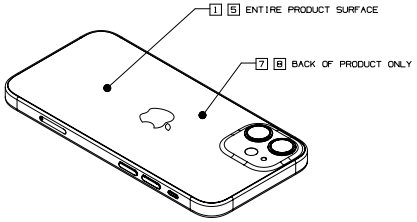

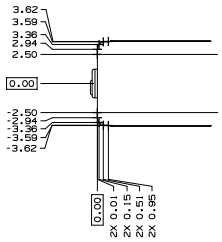

PROFILE (ALL SIDES)
DETAIL B

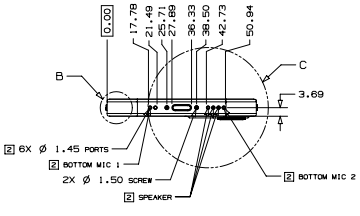

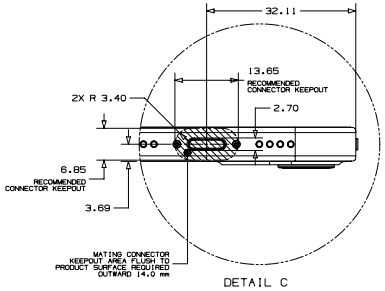

DETAIL C

METRIC		Apple Inc.
DRAWTER APPLE INC.	DATE 10/13/20	NOTICE OF PROPRIETARY PROPERTY: THE INFORMATION CONTAINED HEREIN IS THE PROPRIETARY PROPERTY OF APPLE INC. THE POSSESSOR AGREES TO THE FOLLOWING: (i) TO MAINTAIN THIS DOCUMENT IN CONFIDENCE (ii) NOT TO REPRODUCE OR COPY IT (iii) NOT TO REVEAL OR PUBLISH IT IN WHOLE OR PART (iv) ALL RIGHTS RESERVED
DESIGNER APPLE INC.	DATE 10/13/20	TITLE iPhone 12 mini
		DRAWING NUMBER / REV.
THIRD ANGLE PROJECTION	SIZE D	SCALE NONE / SHT 1 OF 2

NX GENERATED

45.16 iPhone 12 mini 2 of 2

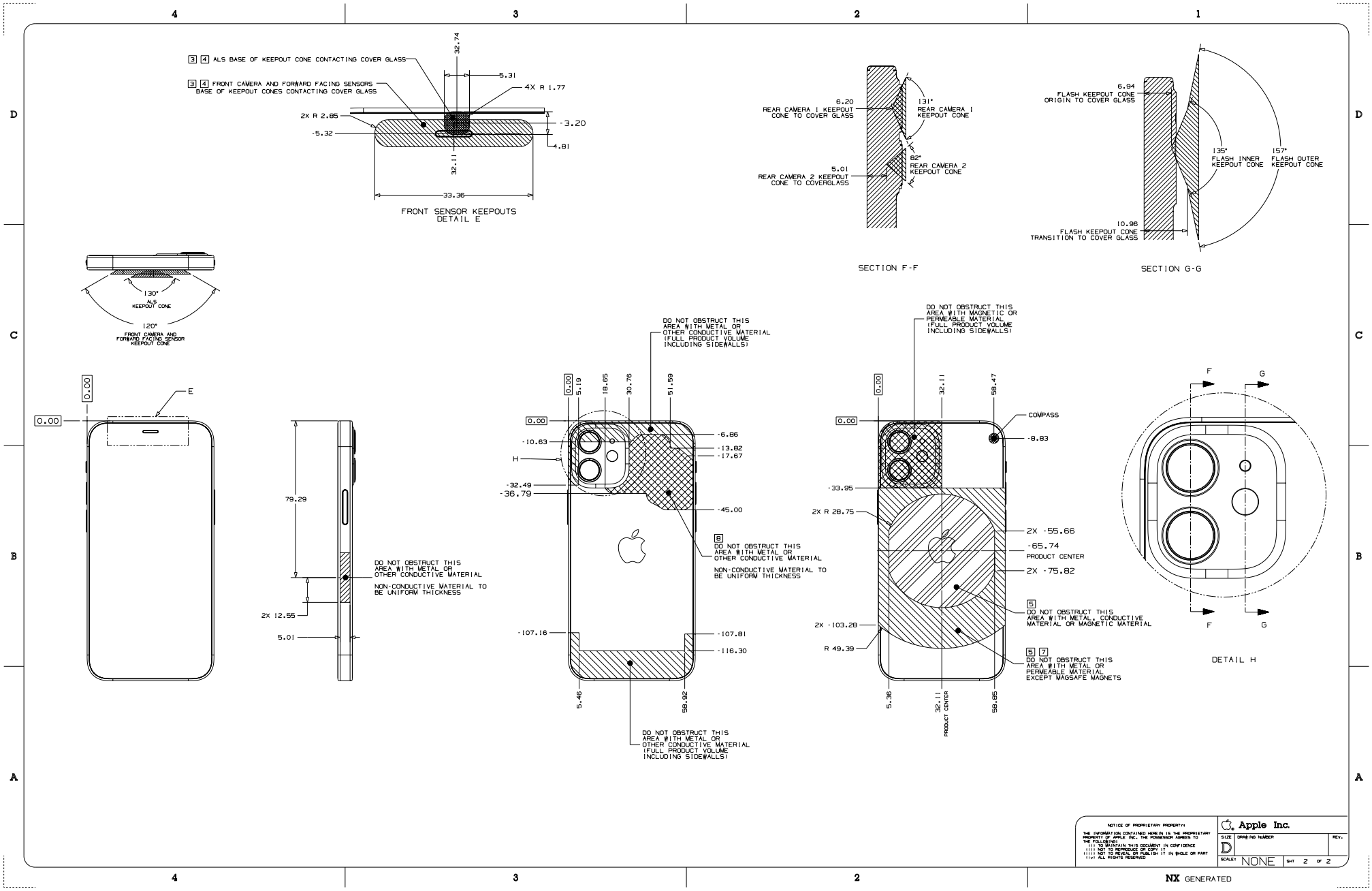

45.17 iPhone SE (3rd generation) and iPhone SE (2nd generation)

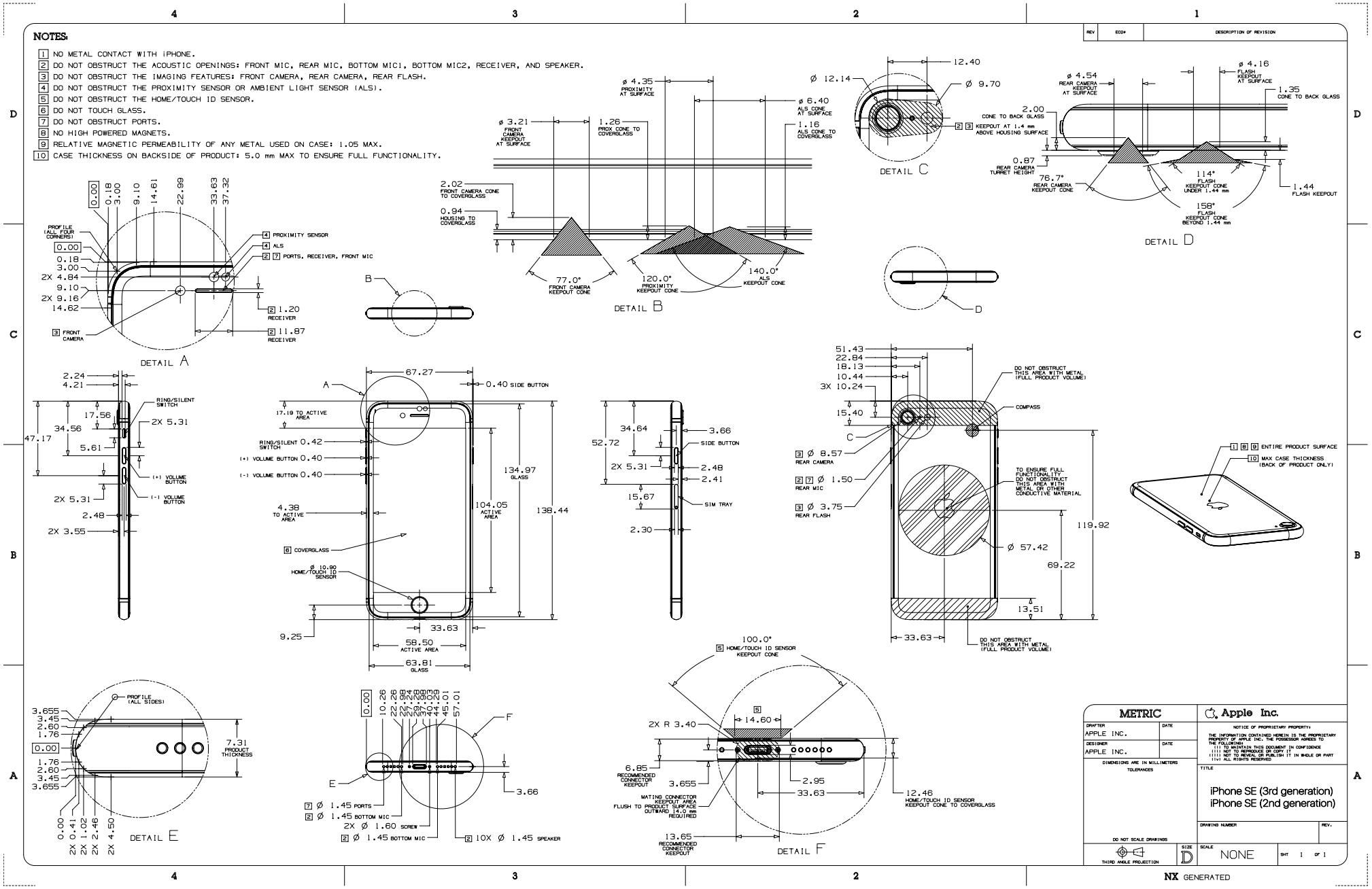

45.18 iPhone 11 Pro Max

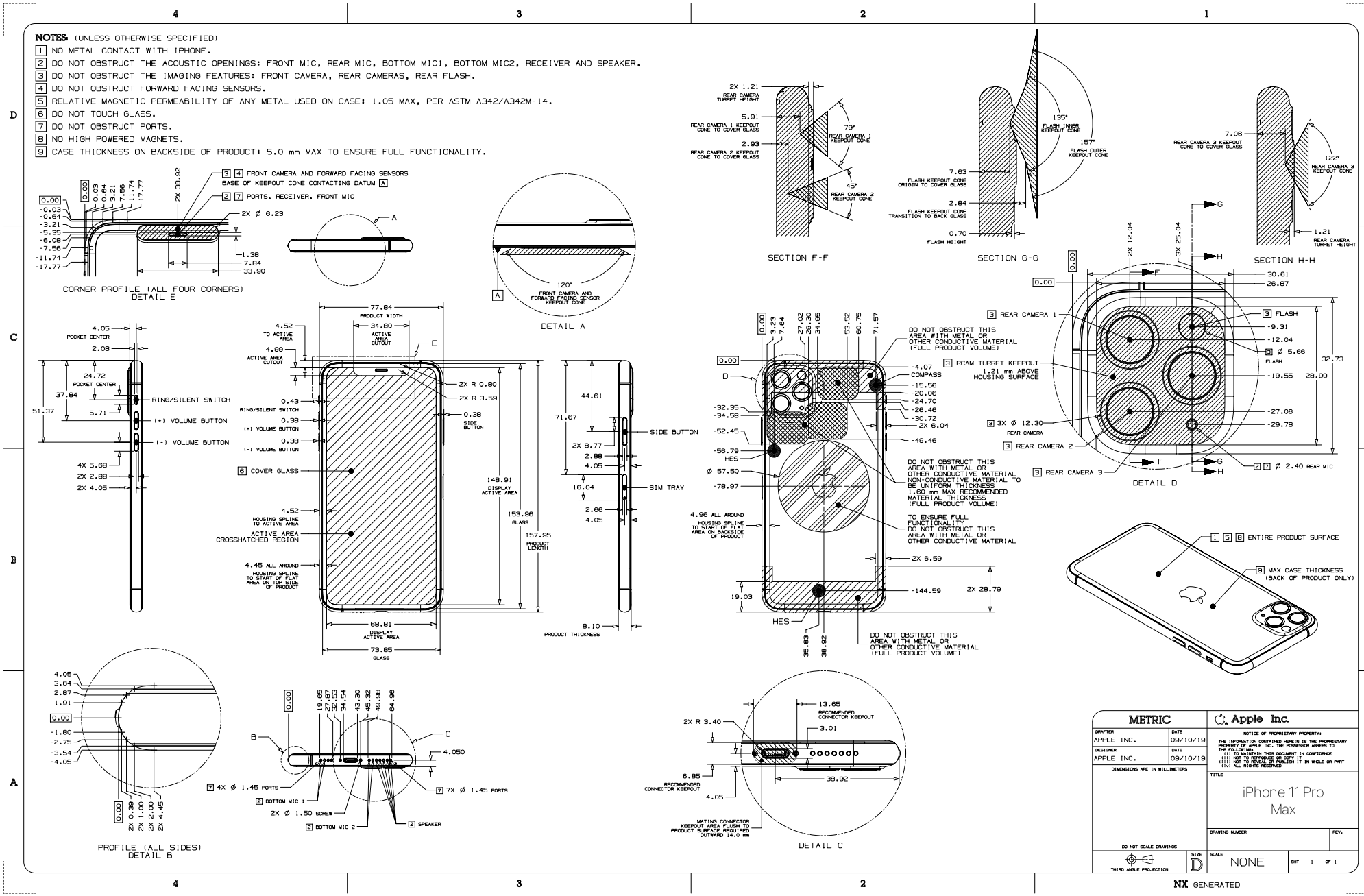

45.19 iPhone 11 Pro

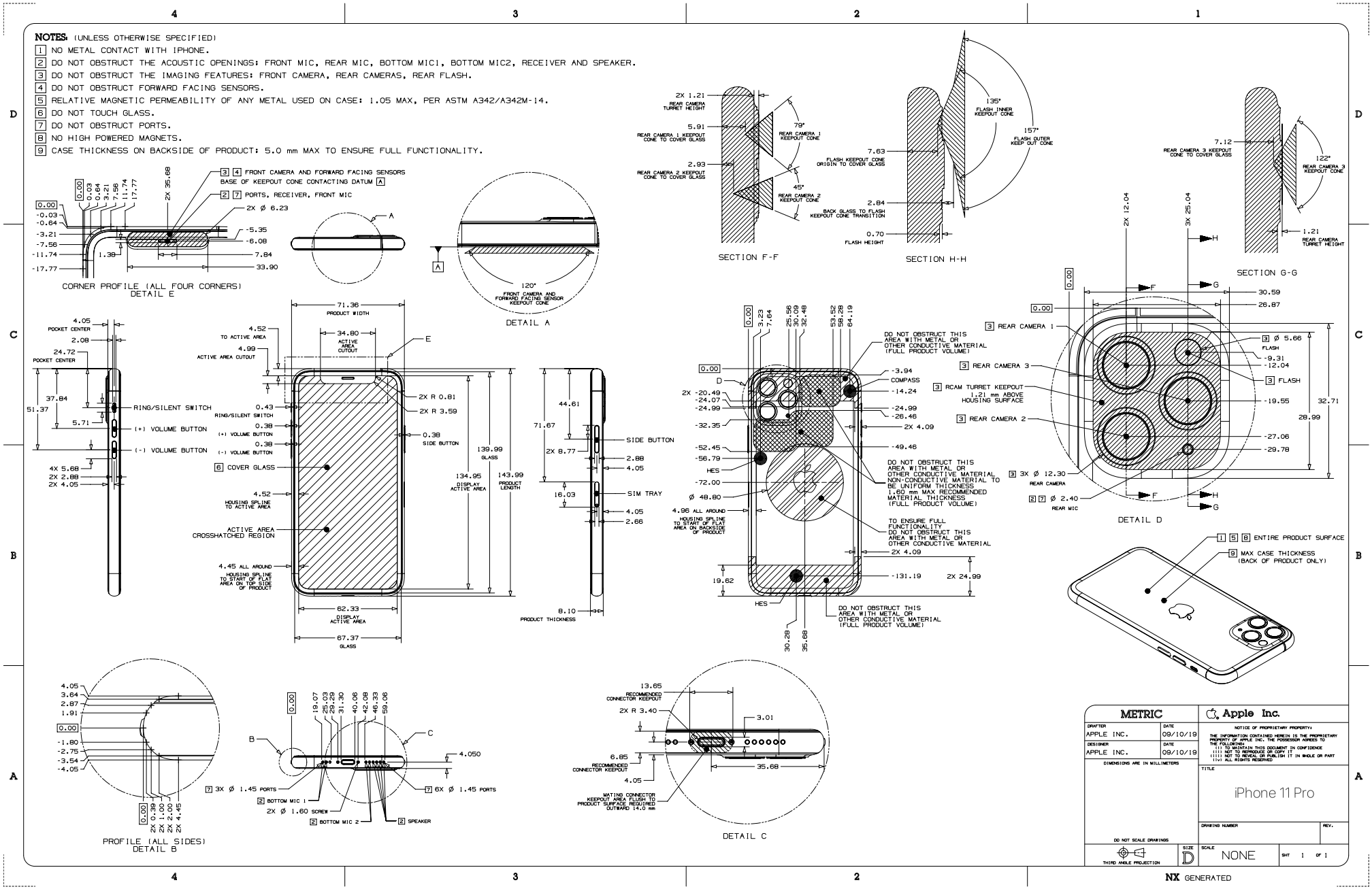

45.20 iPhone 11

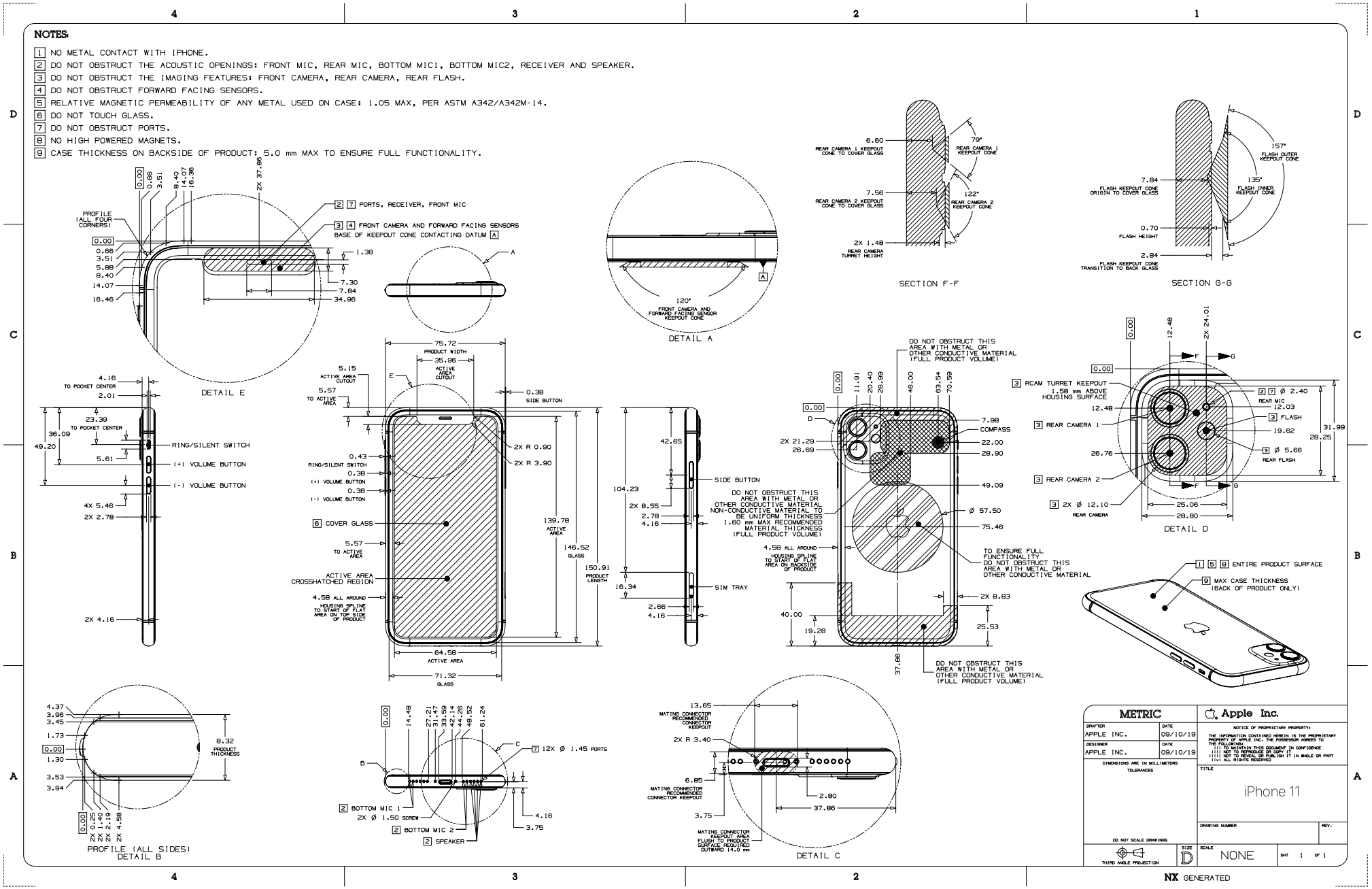

45.21 iPhone XS Max

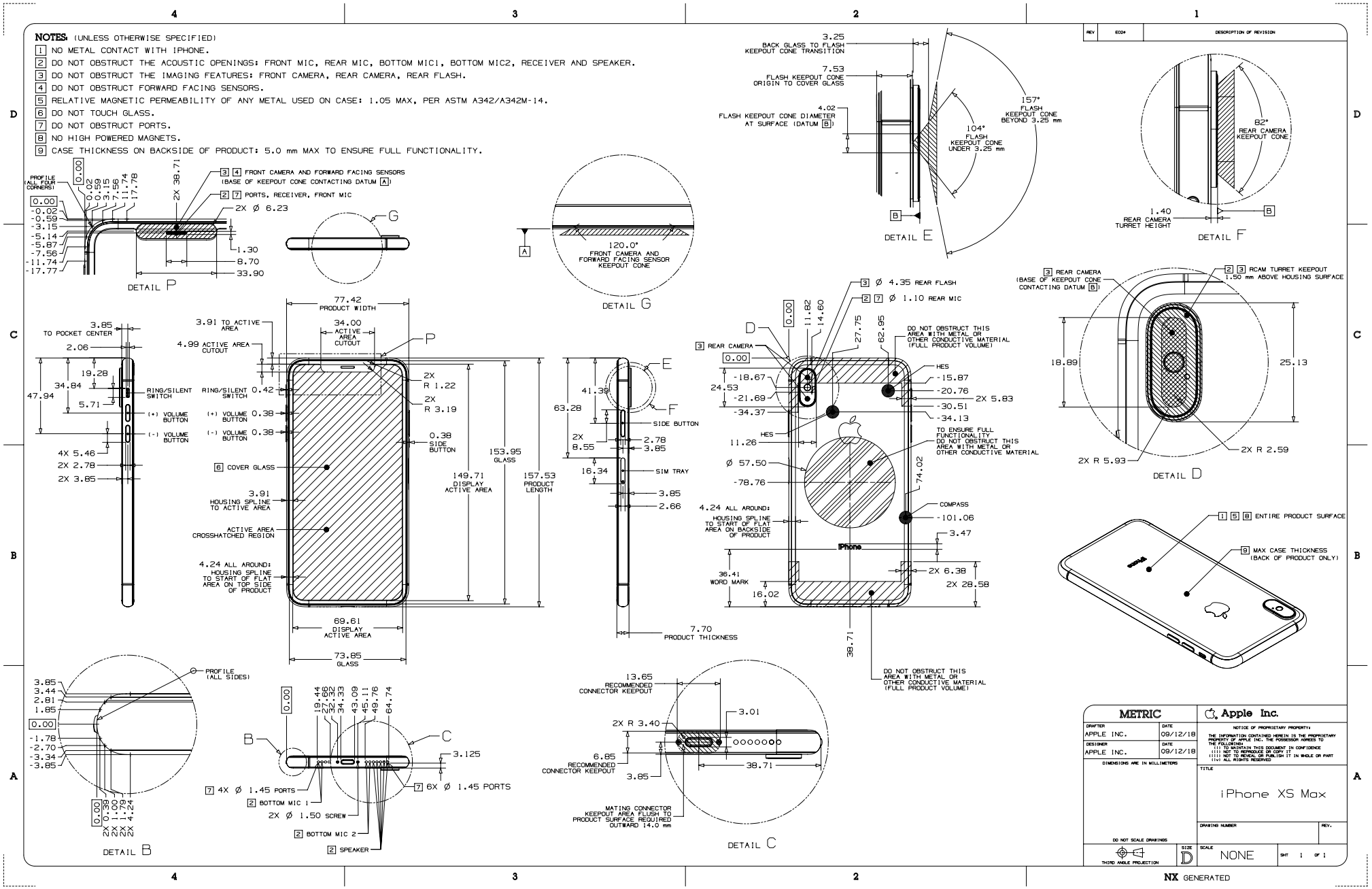

45.22 iPhone XS

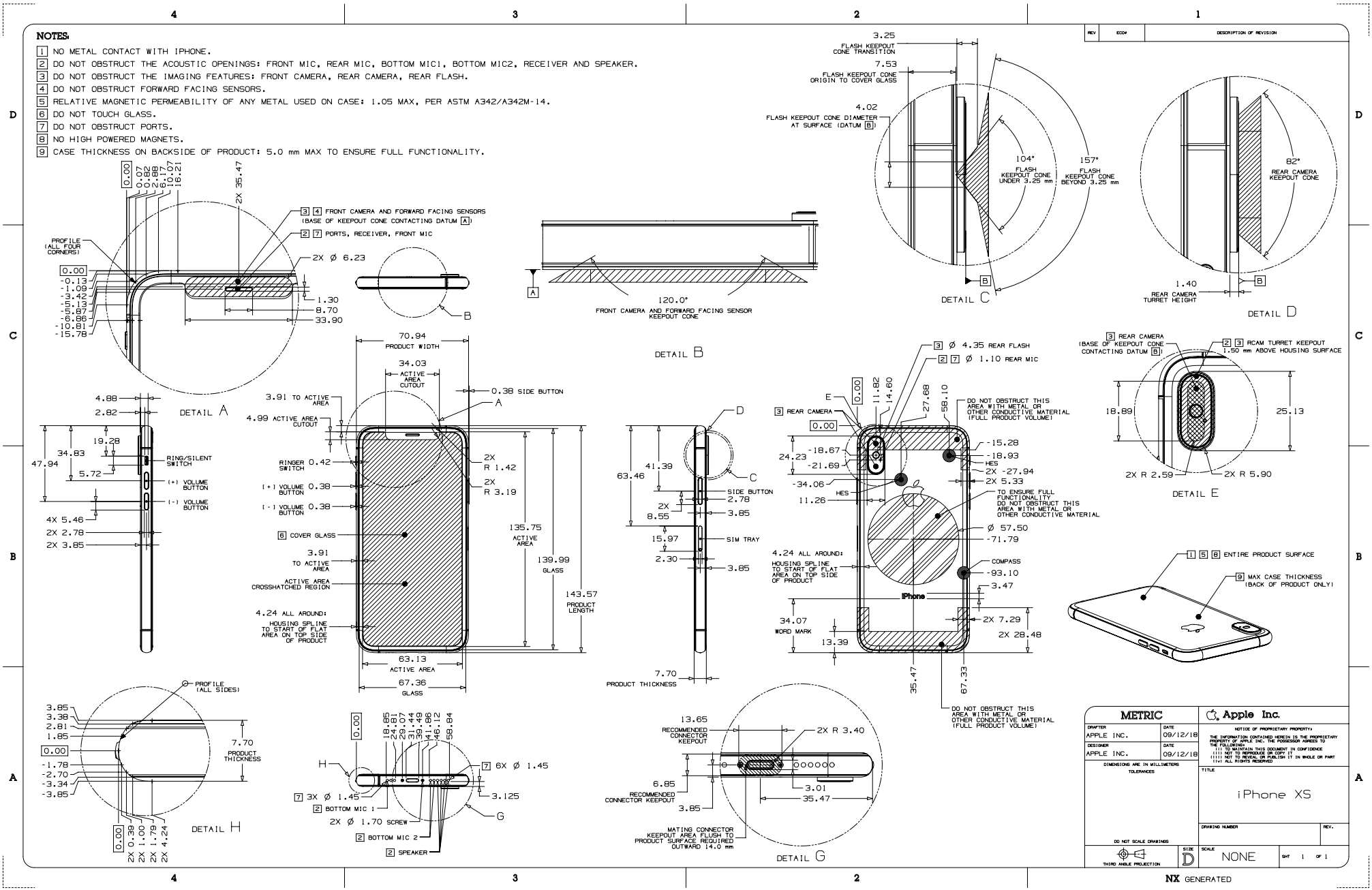

45.23 iPhone XR

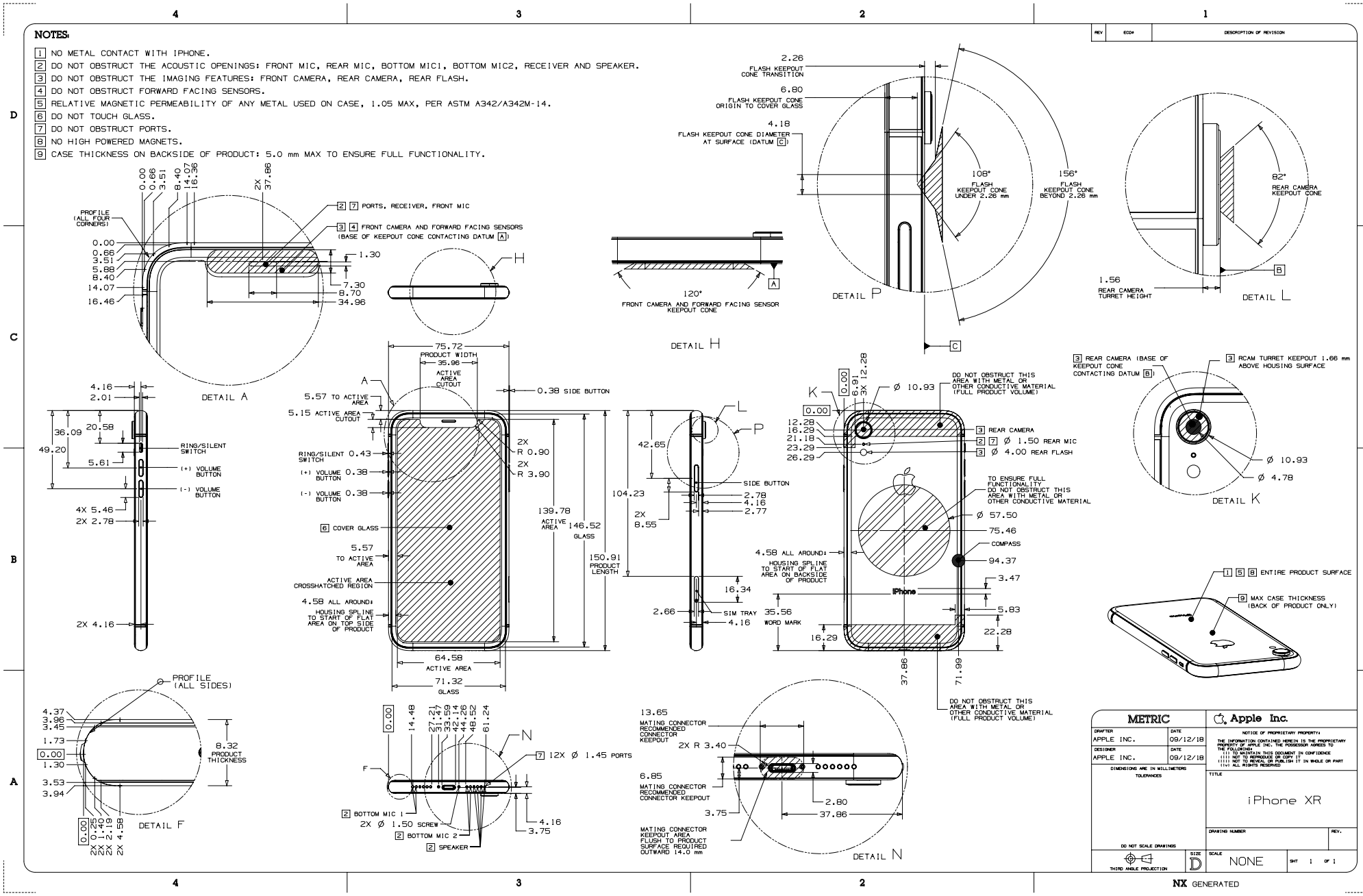

45.24 iPhone X

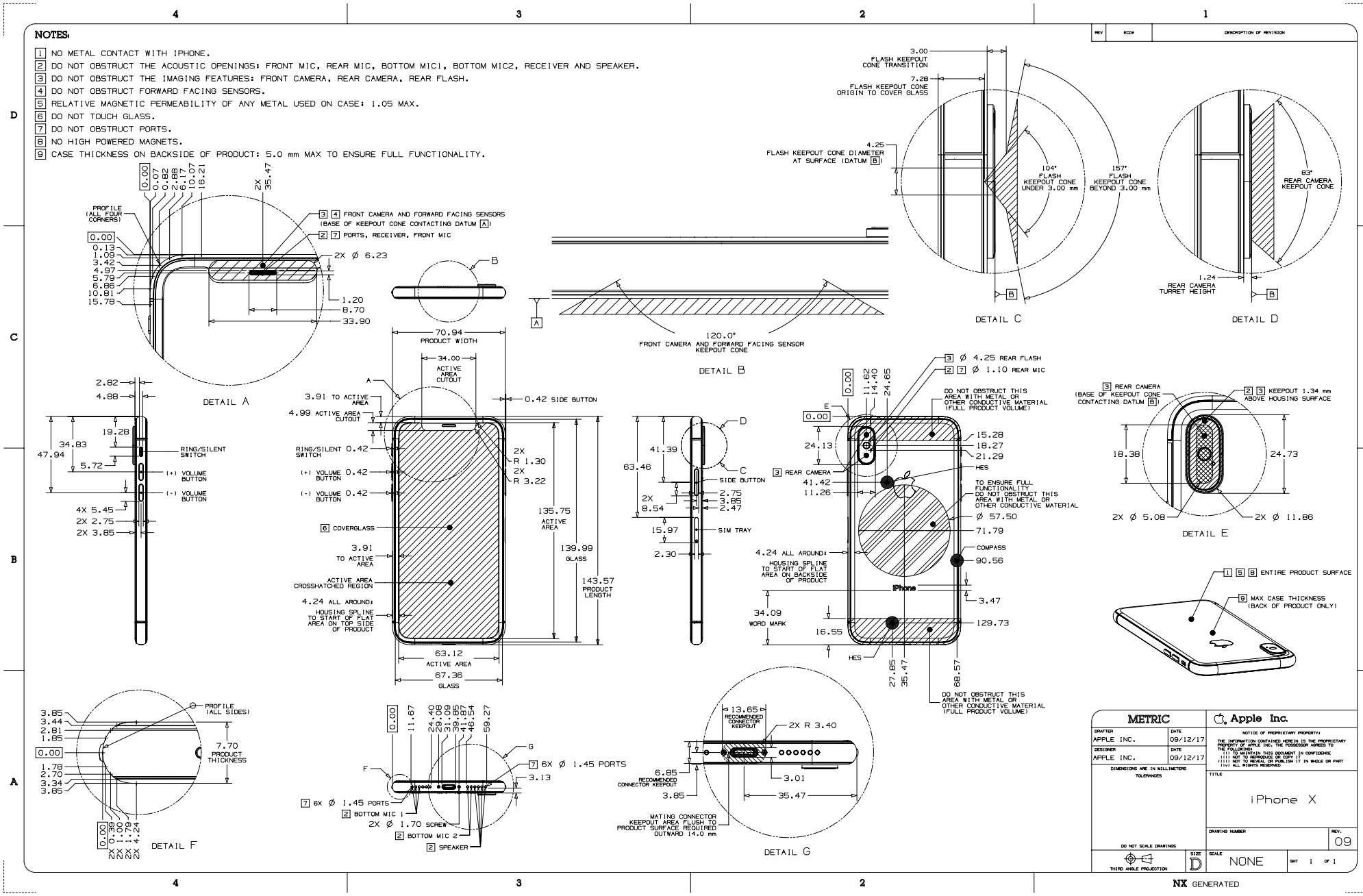

45.25 iPhone 8 Plus

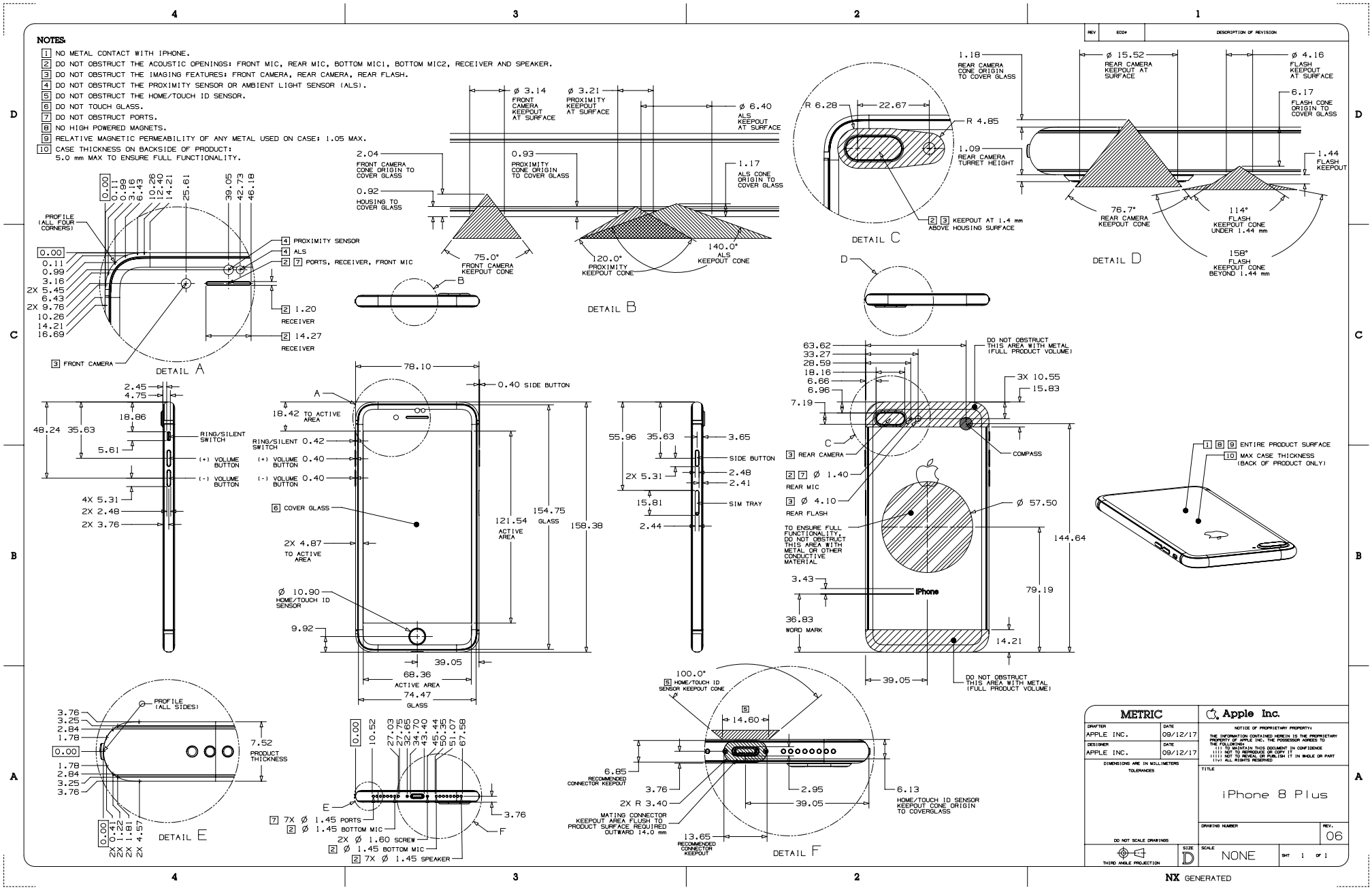

45.26 iPhone 8

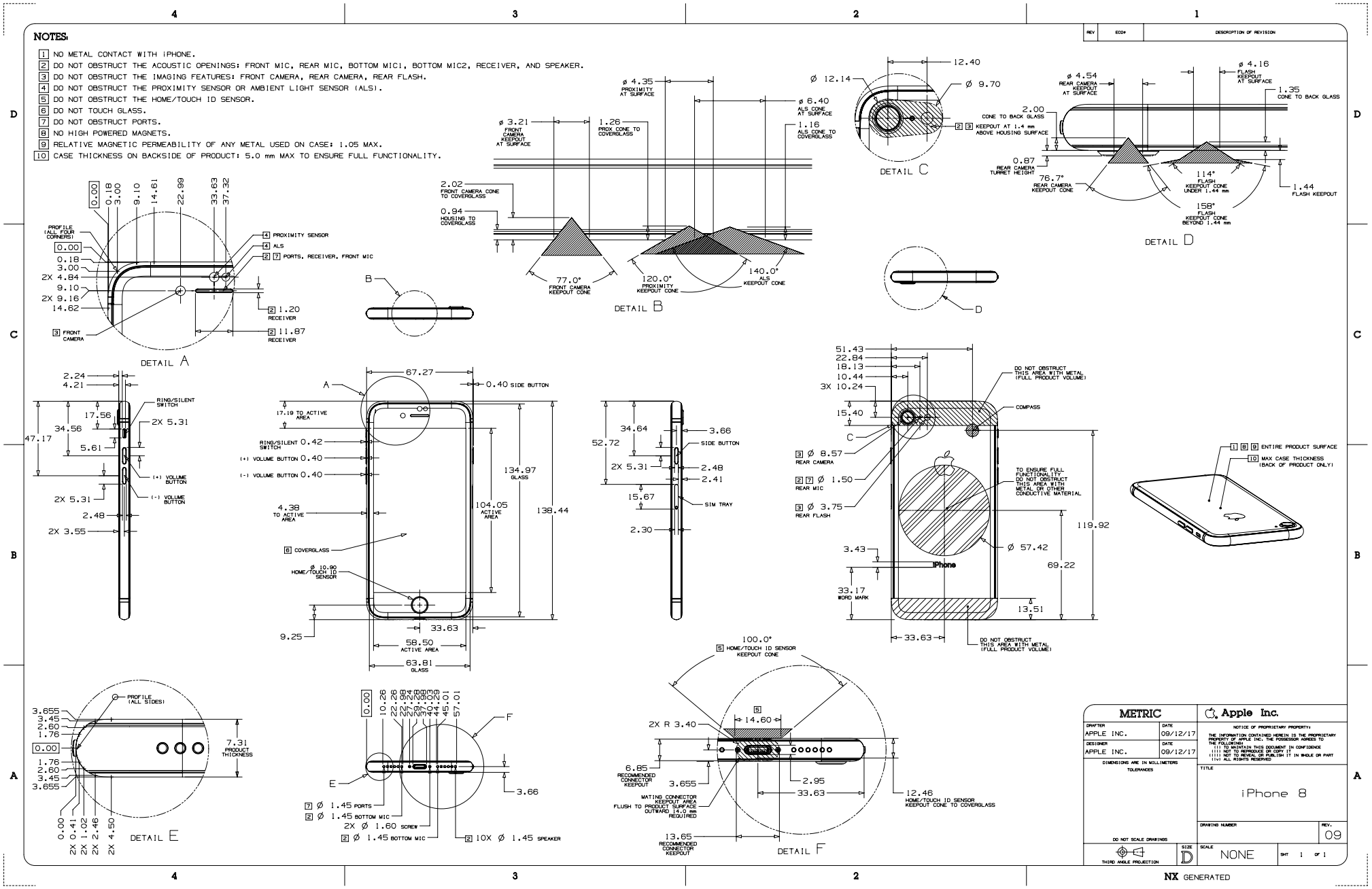

45.27 iPhone 7 Plus

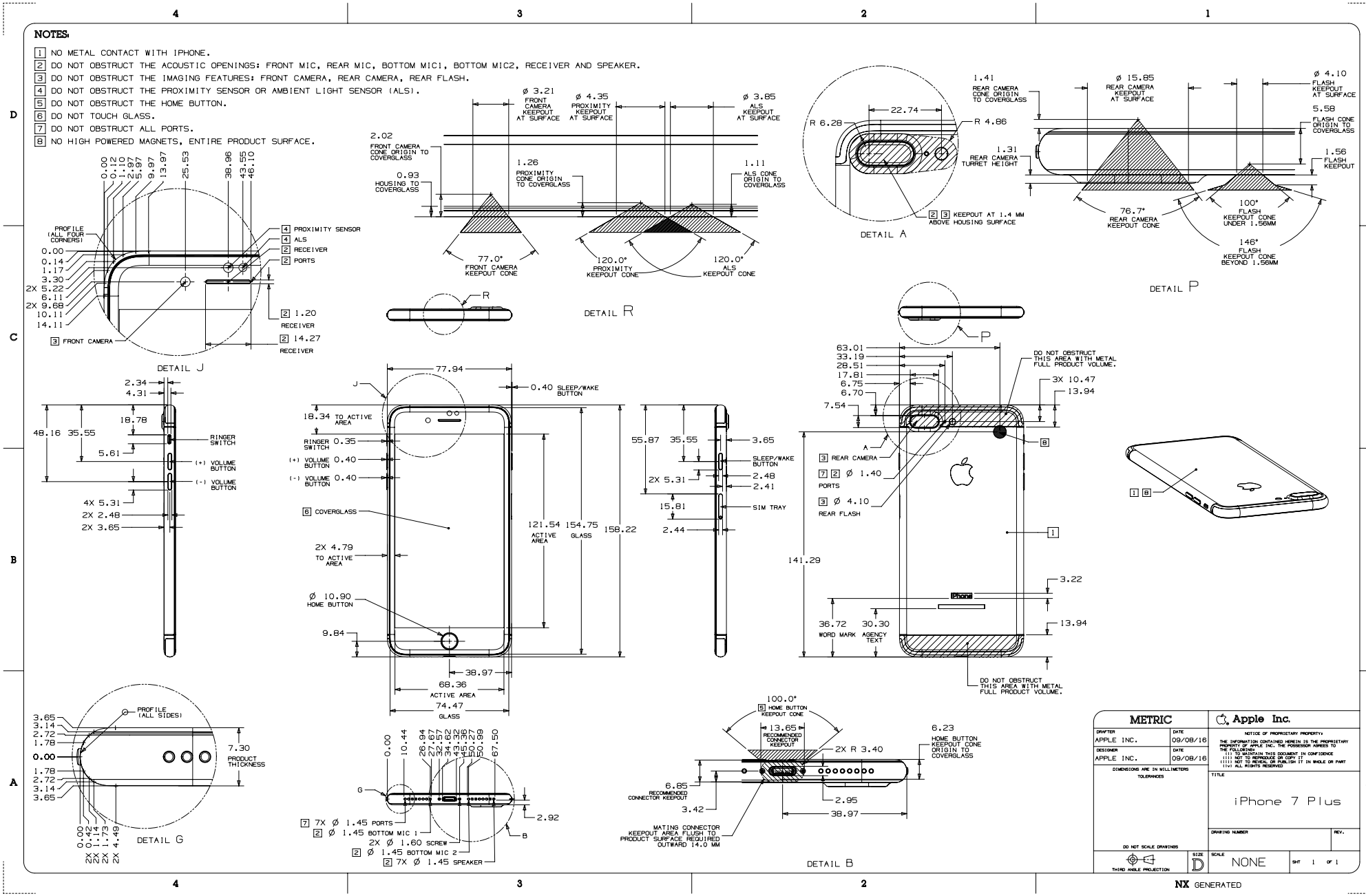

45.28 iPhone 7

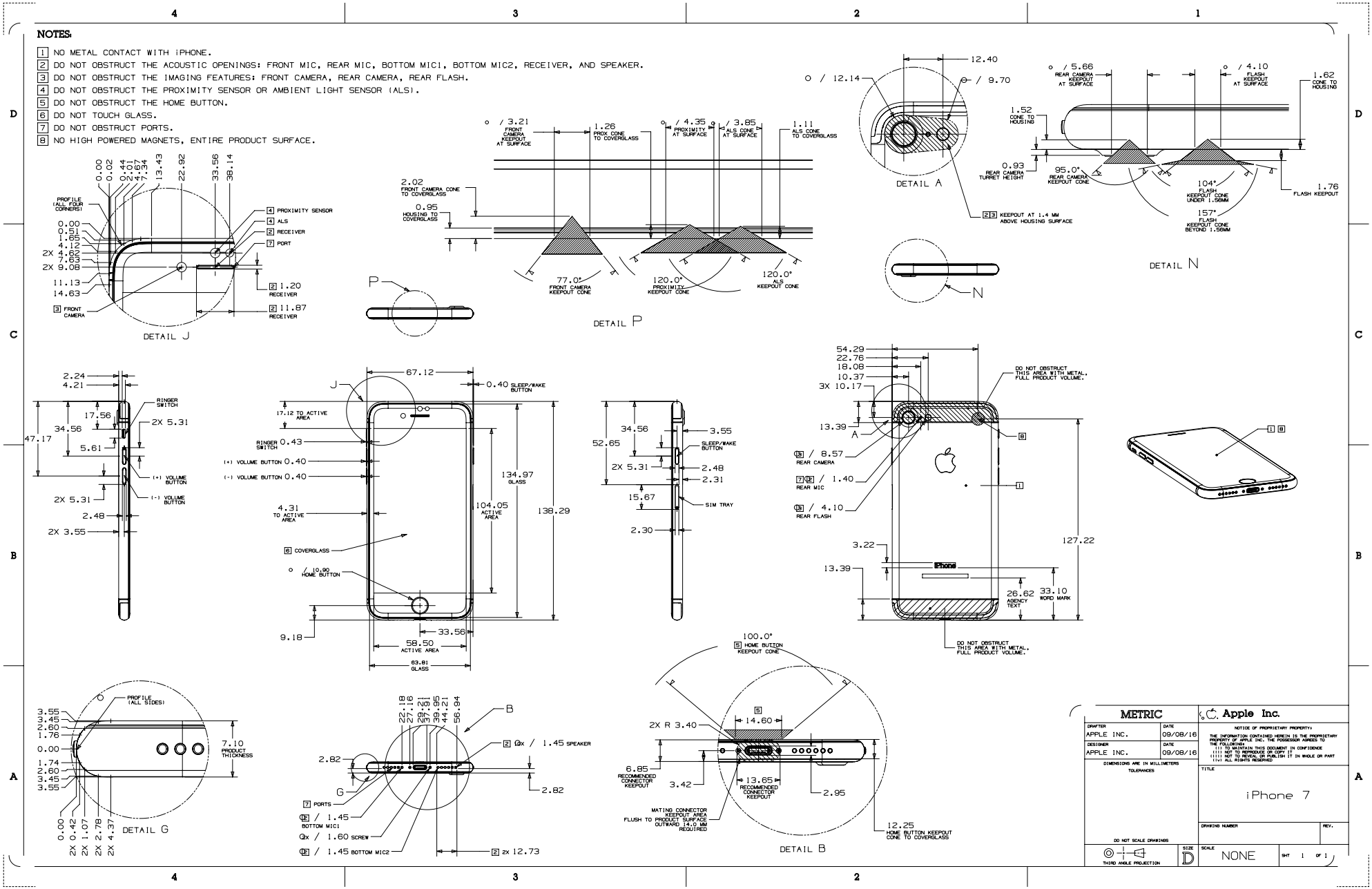

45.29 iPhone 6s Plus

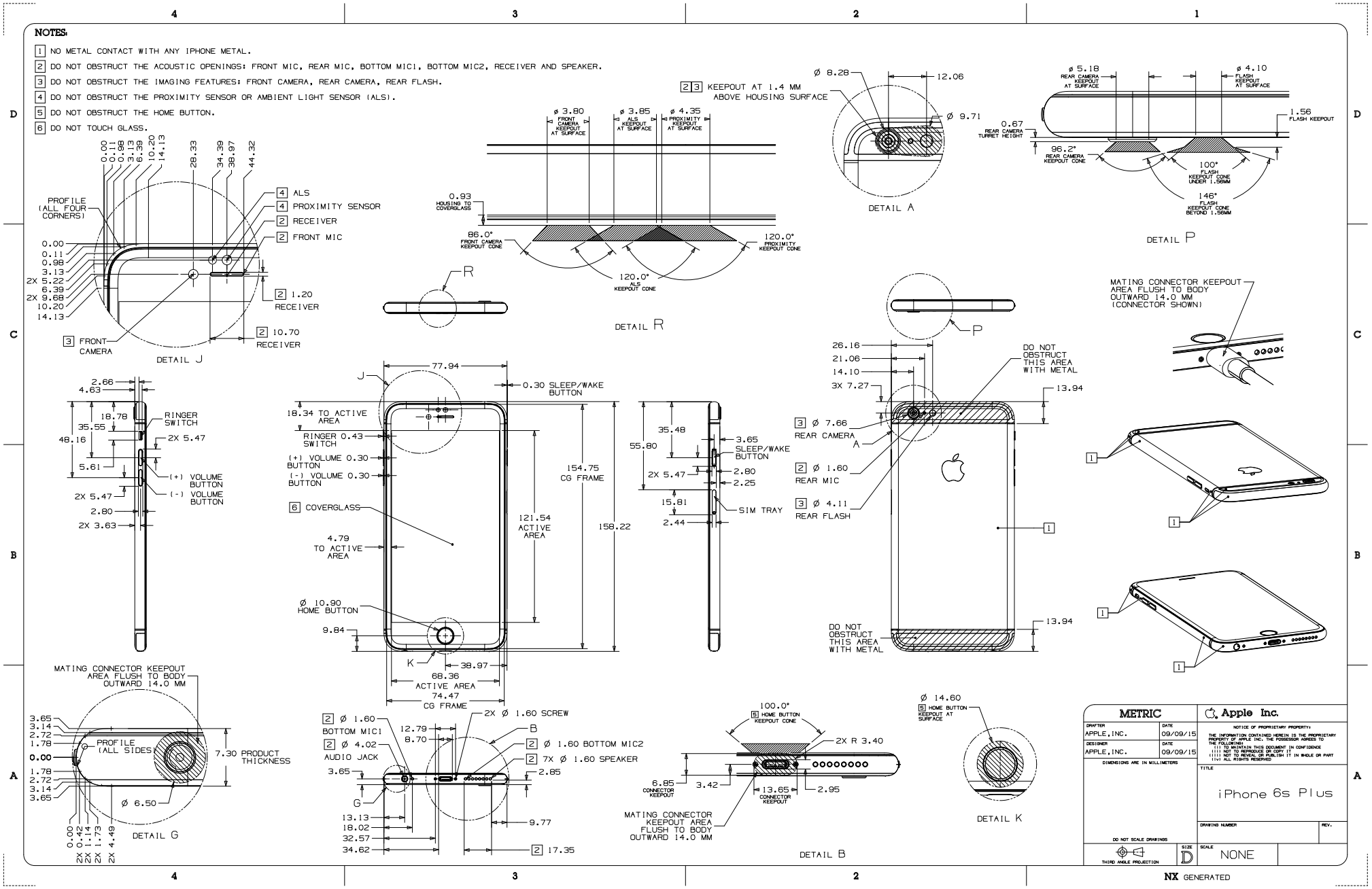

45.30 iPhone 6s

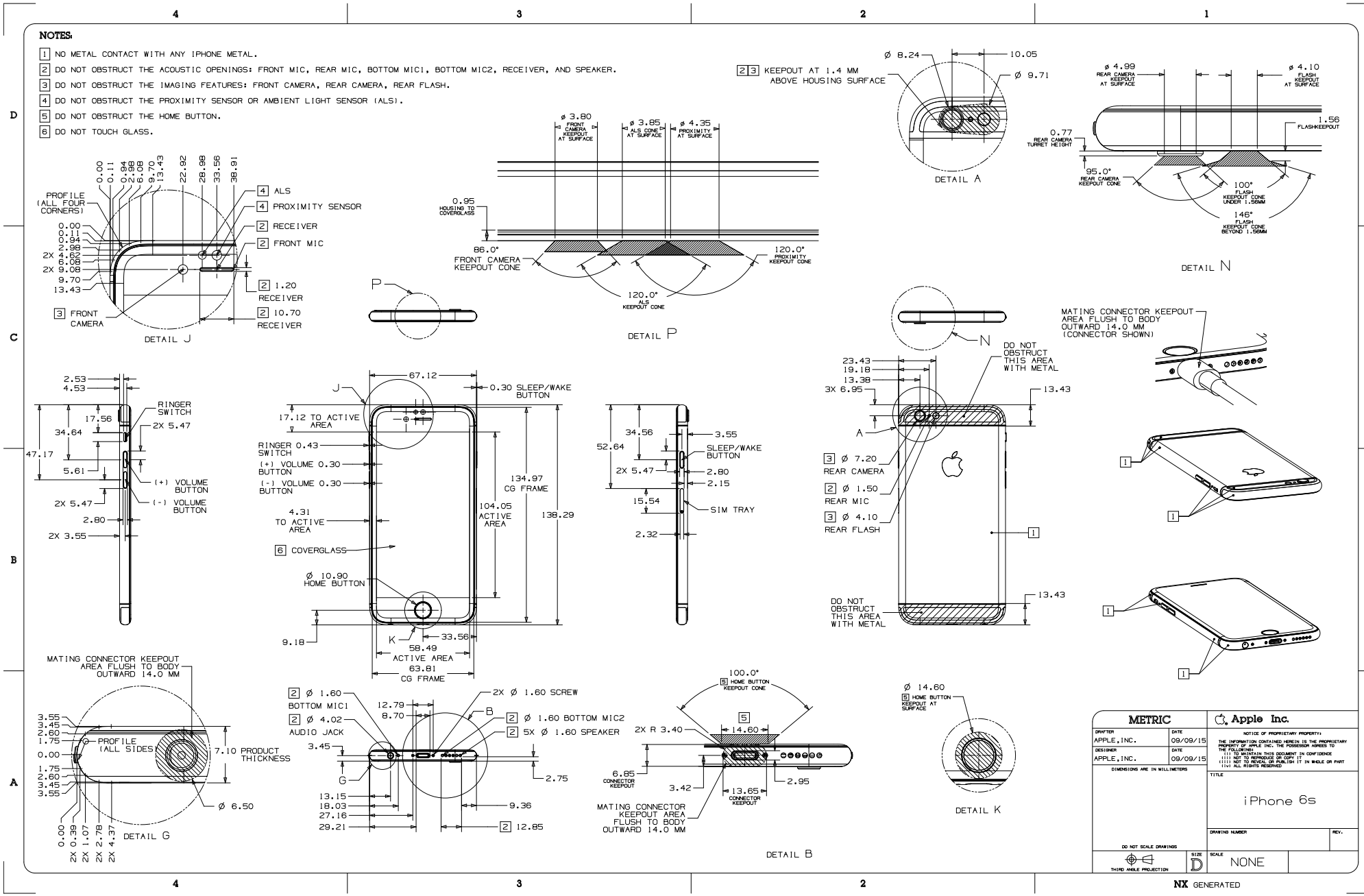

45.31 iPhone 6 Plus

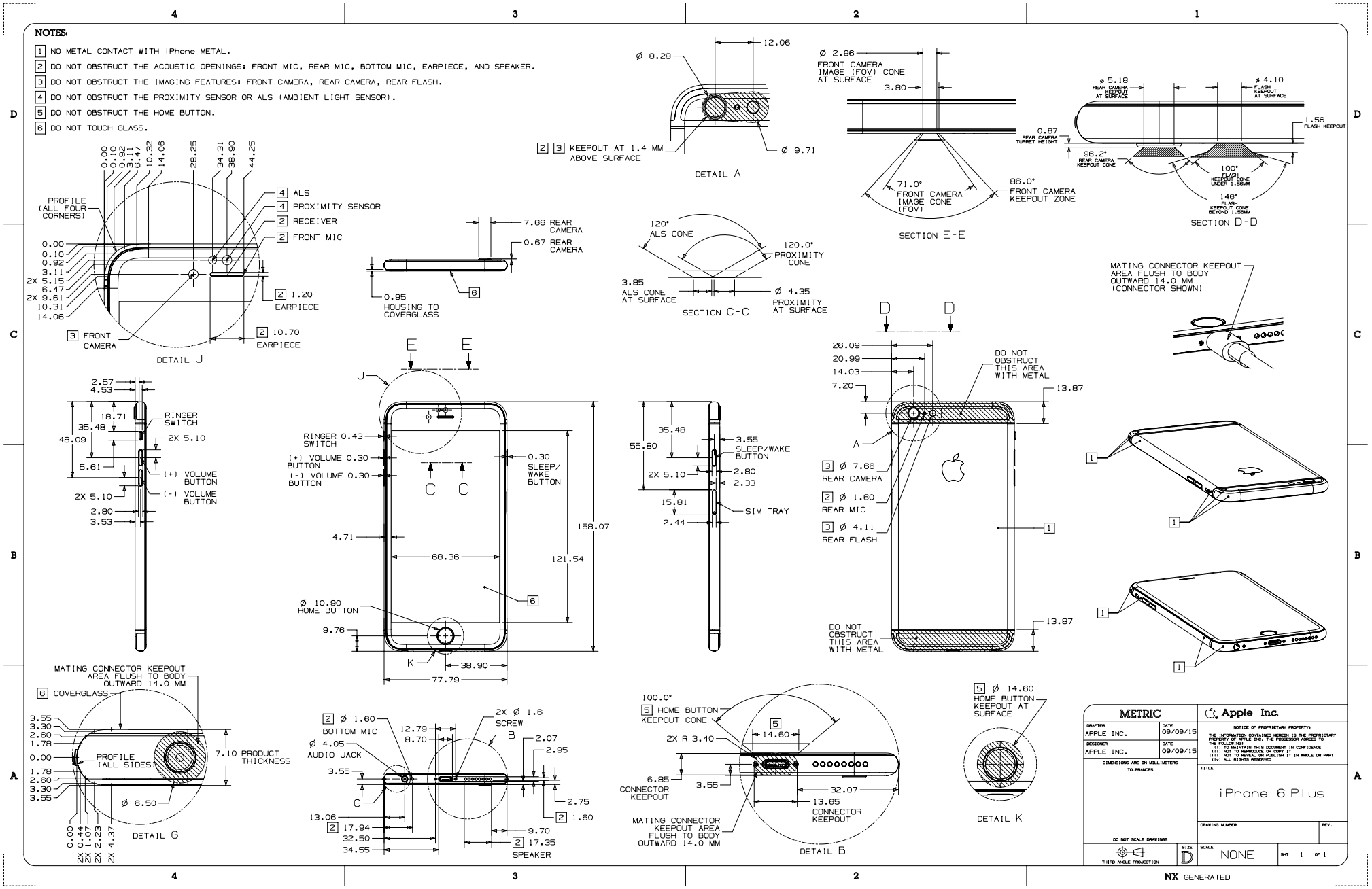

45.32 iPhone 6

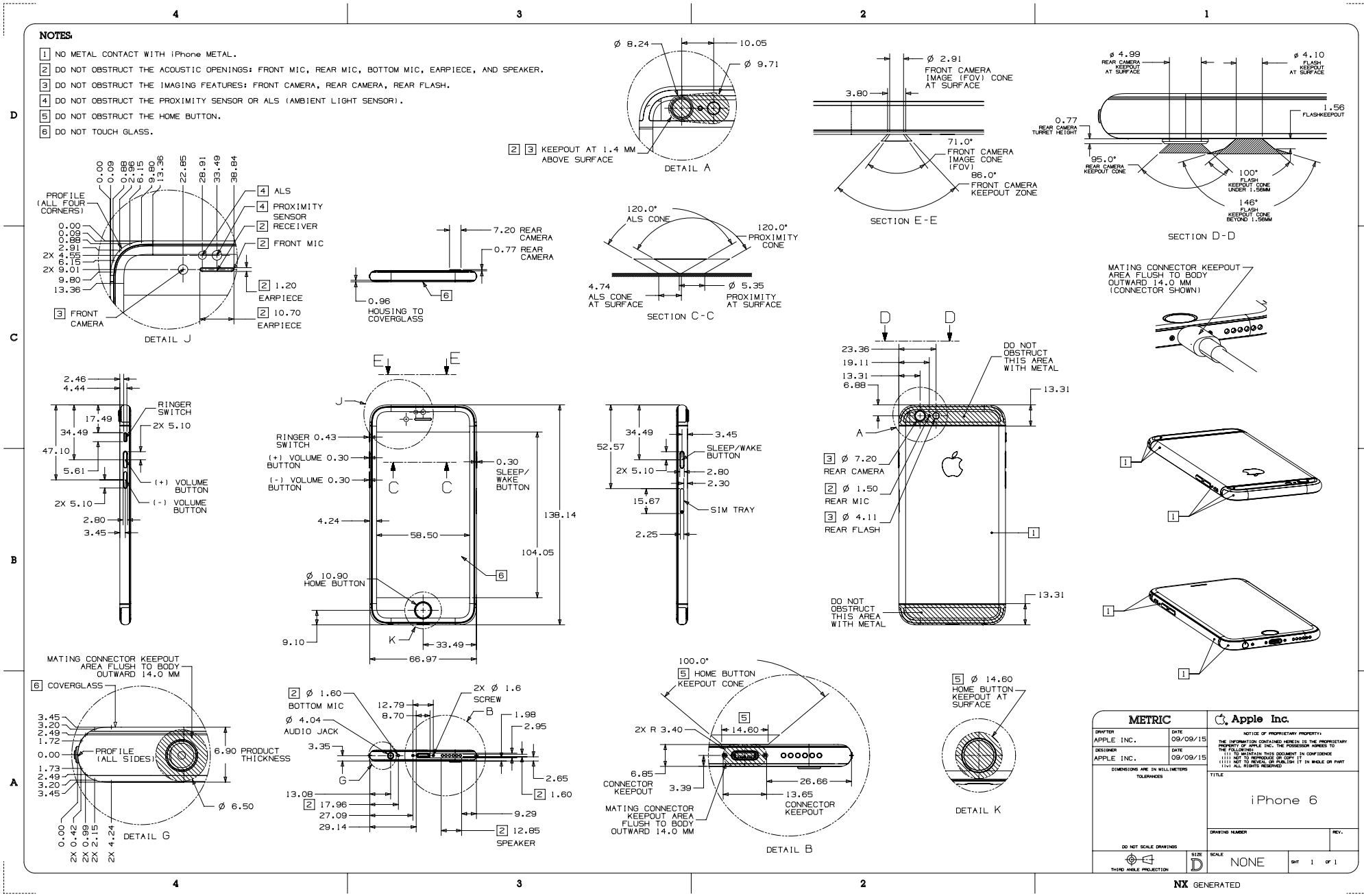

45.33 iPhone 5s and iPhone SE

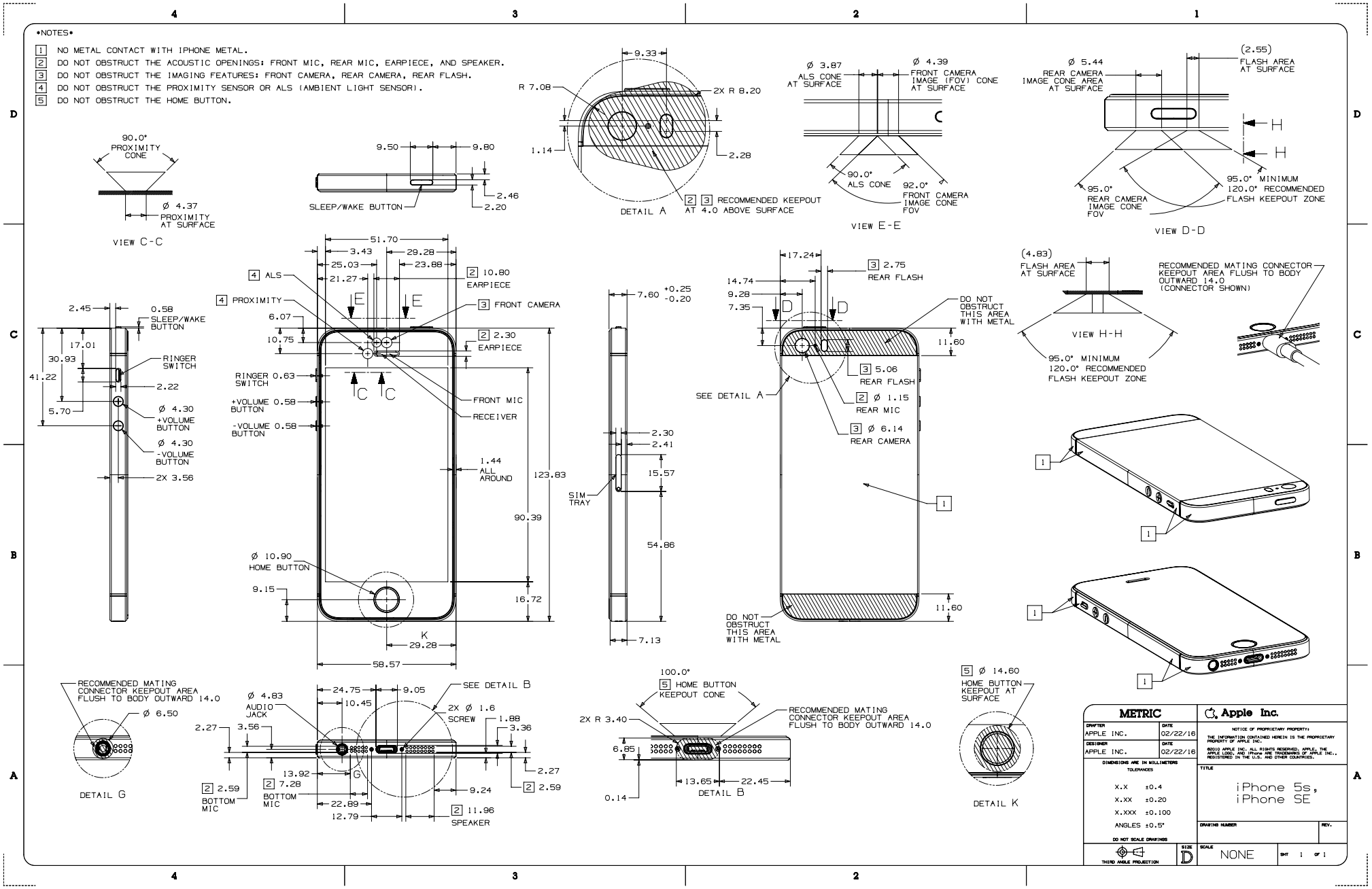

45.34 iPhone 5c

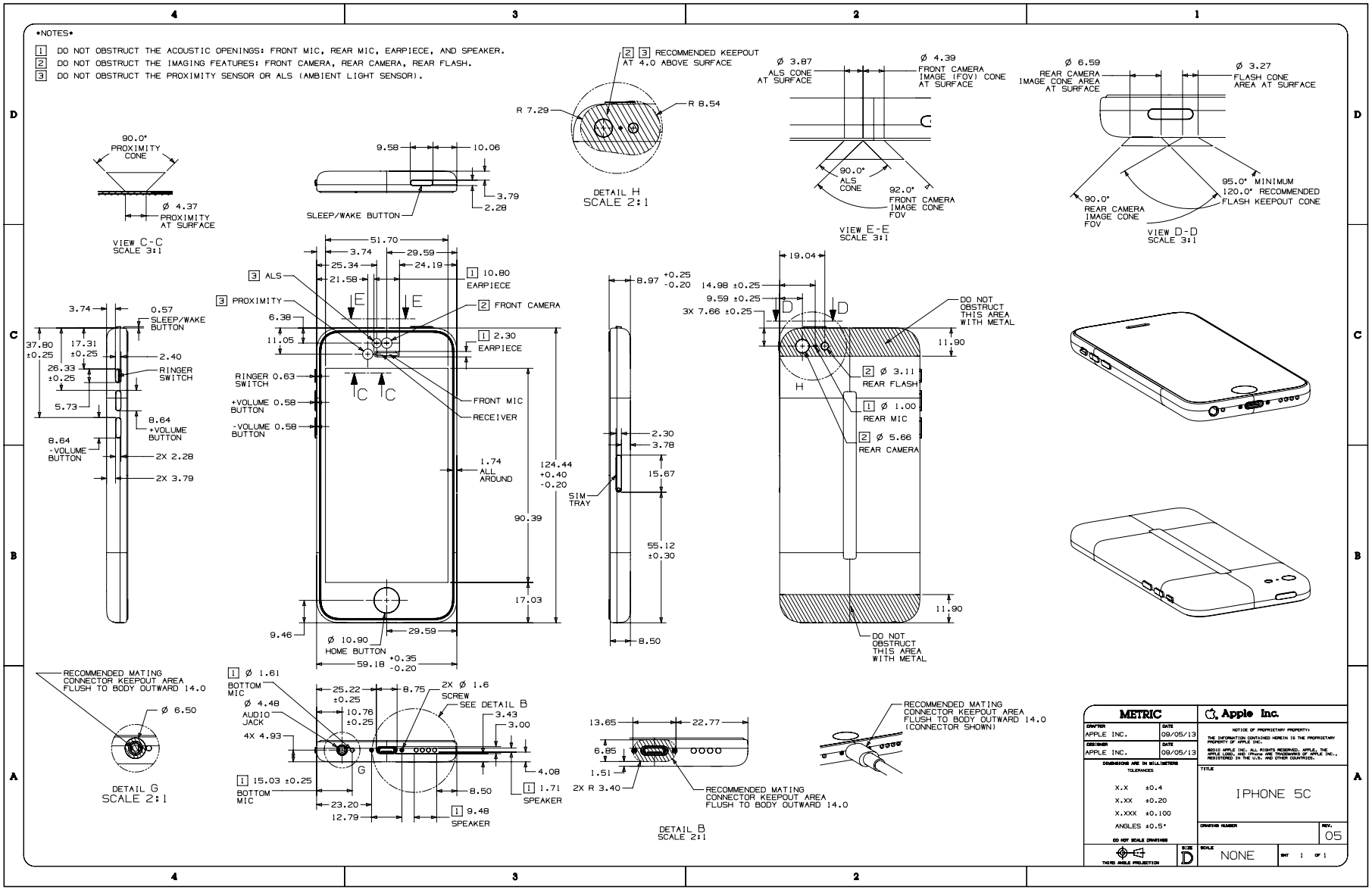

45.35 iPhone 5

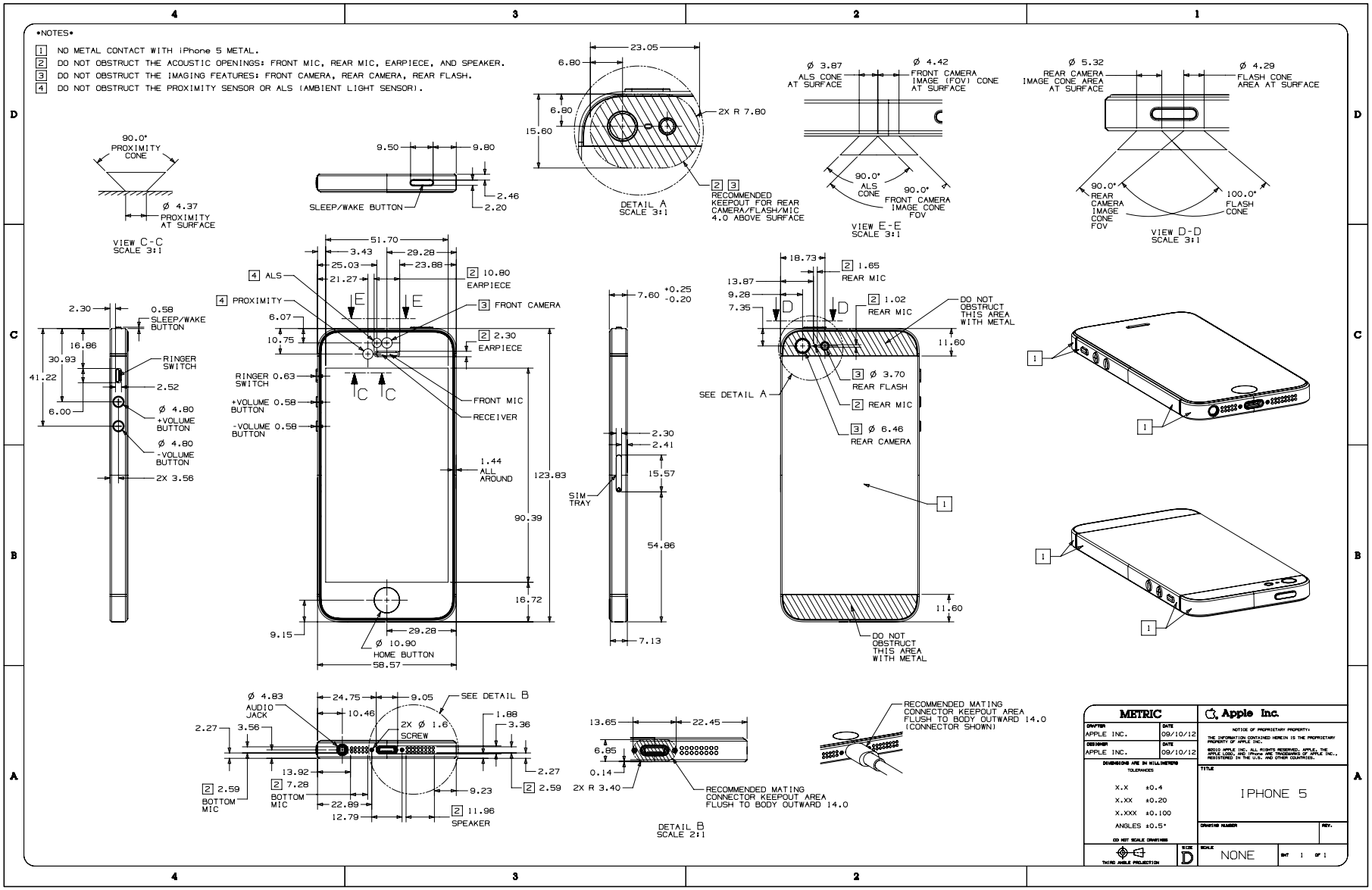

45.36 iPad Air (5th generation) and iPad Air (4th generation) 1 of 5

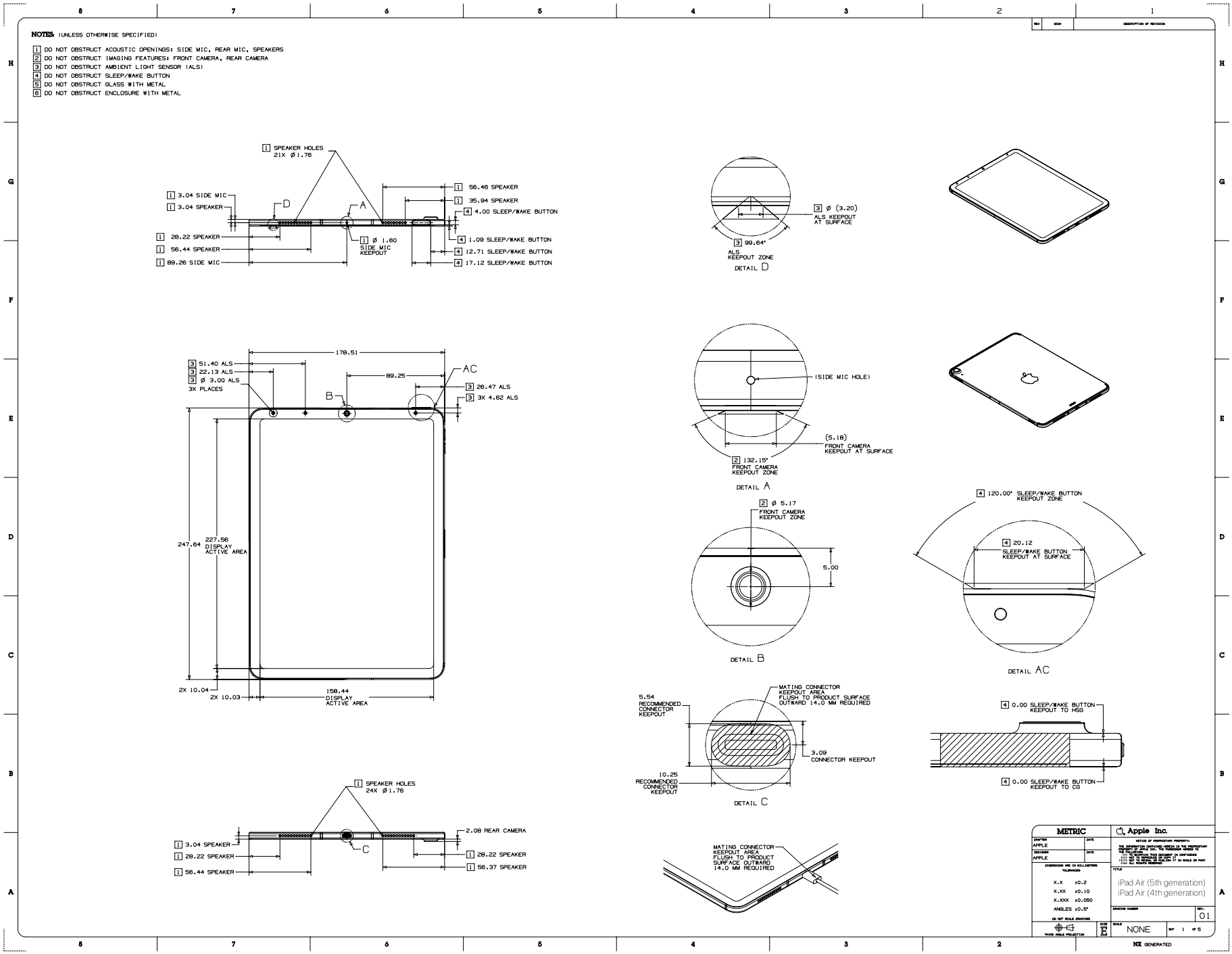

45.37 iPad Air (5th generation) and iPad Air (4th generation) 2 of 5

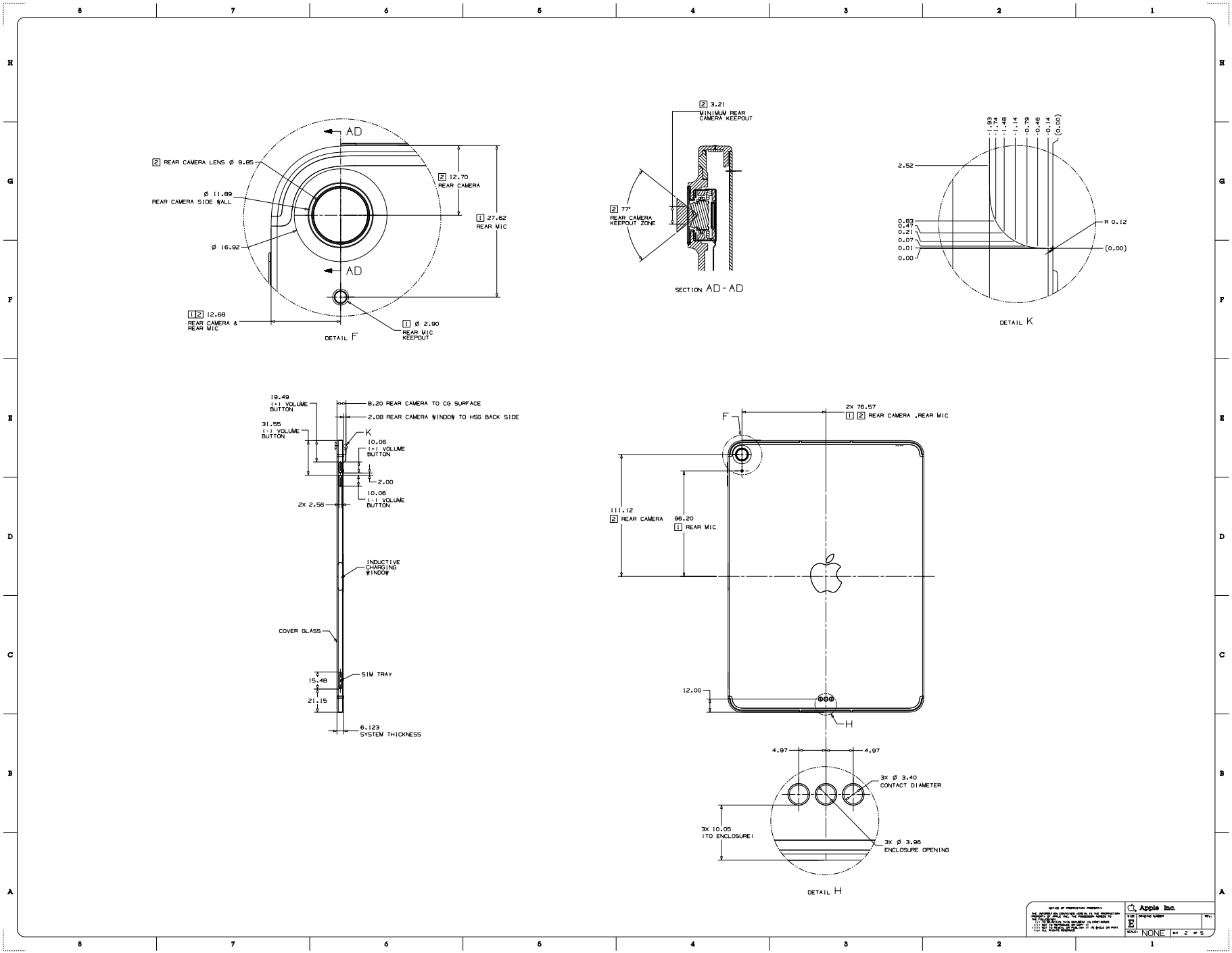

45.38 iPad Air (5th generation) and iPad Air (4th generation) 3 of 5

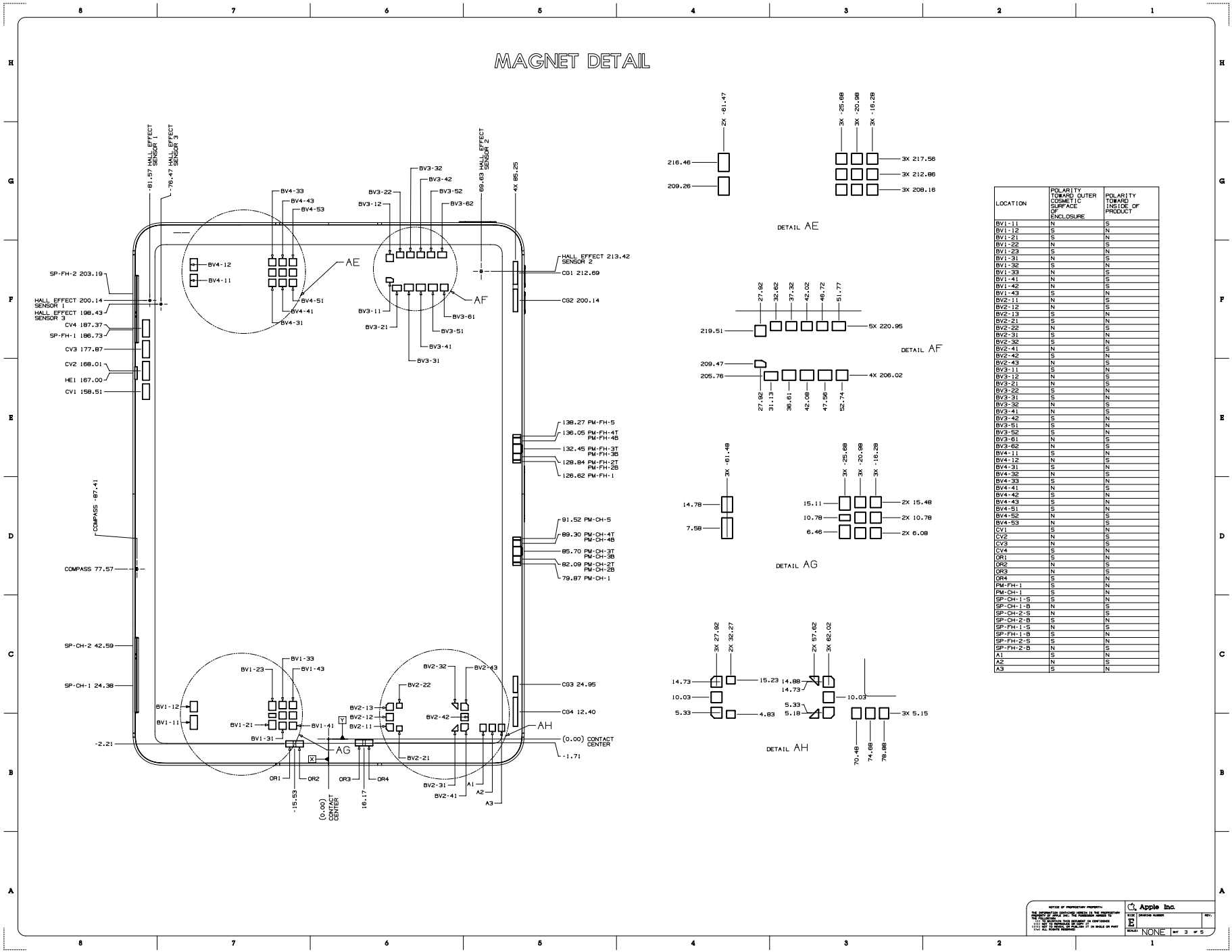

LOCATION	POLARITY TOWARD OUTER COSMETIC SURFACE OF ENCLOSURE	POLARITY TOWARD INSIDE OF PRODUCT
BV1-11	N	S
BV1-12	S	N
BV1-21	S	N
BV1-22	N	S
BV1-23	S	N
BV1-31	N	S
BV1-32	S	N
BV1-33	N	S
BV1-41	N	S
BV1-42	N	S
BV1-43	S	N
BV2-11	N	S
BV2-12	N	S
BV2-13	S	N
BV2-21	S	N
BV2-22	N	S
BV2-31	S	N
BV2-32	S	N
BV2-41	N	S
BV2-42	S	N
BV2-43	N	S
BV3-11	S	N
BV3-12	N	S
BV3-21	N	S
BV3-22	S	N
BV3-31	S	N
BV3-32	N	S
BV3-41	N	S
BV3-42	S	N
BV3-51	S	N
BV3-52	S	N
BV3-61	N	S
BV3-62	N	S
BV4-11	S	N
BV4-12	N	S
BV4-31	S	N
BV4-32	N	S
BV4-33	S	N
BV4-41	N	S
BV4-42	S	N
BV4-43	S	N
BV4-51	S	N
BV4-52	N	S
BV4-53	N	S
CV1	S	N
CV2	N	S
CV3	N	S
CV4	S	N
OR1	S	N
OR2	N	S
OR3	N	S
OR4	S	N
PM-FH-1	S	N
PM-CH-1	S	N
SP-CH-1-S	S	N
SP-CH-1-B	N	S
SP-CH-2-S	N	S
SP-CH-2-B	S	N
SP-FH-1-S	N	S
SP-FH-1-B	S	N
SP-FH-2-S	S	N
SP-FH-2-B	N	S
A1	S	N
A2	N	S
A3	S	N

45.39 iPad Air (5th generation) and iPad Air (4th generation) 4 of 5

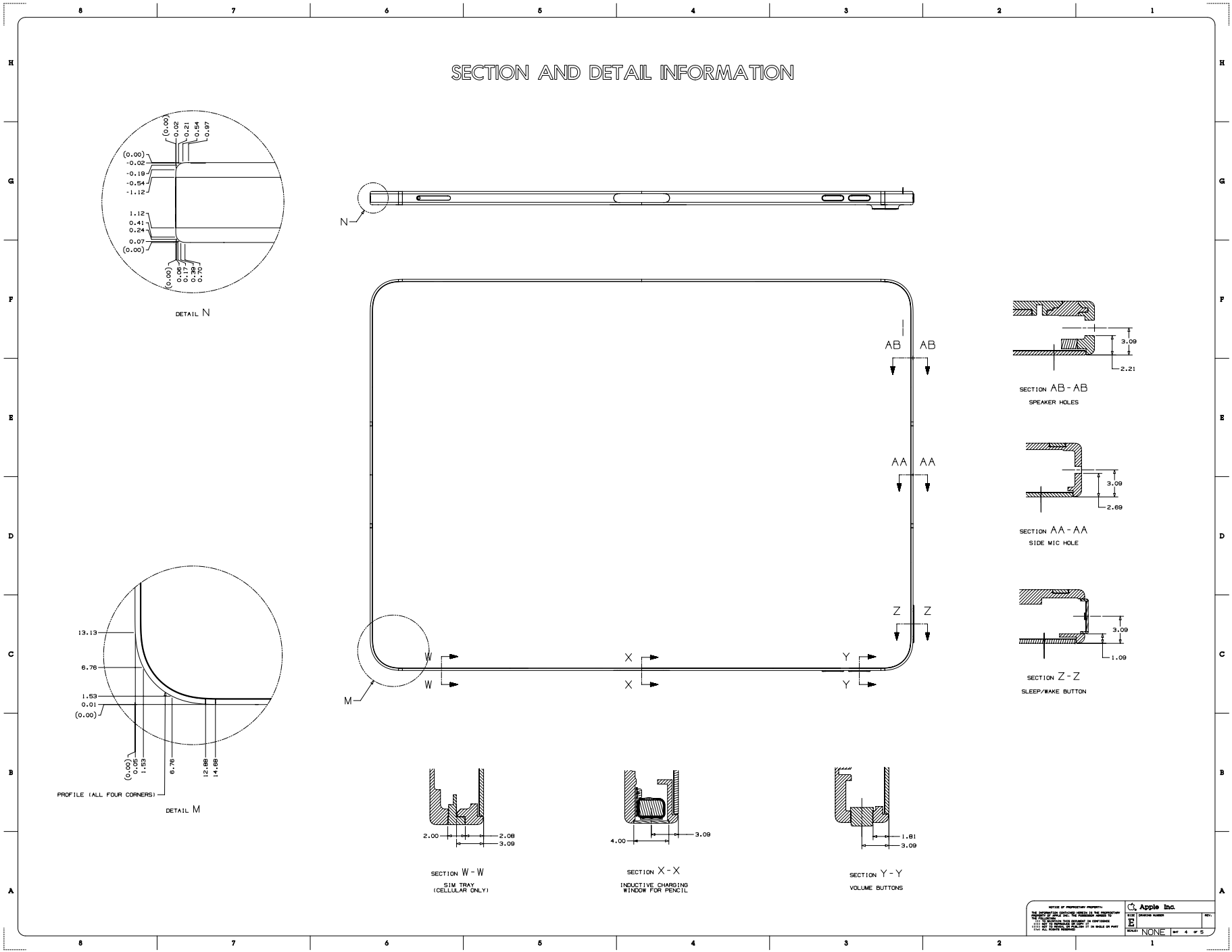

45.40 iPad Air (5th generation) and iPad Air (4th generation) 5 of 5

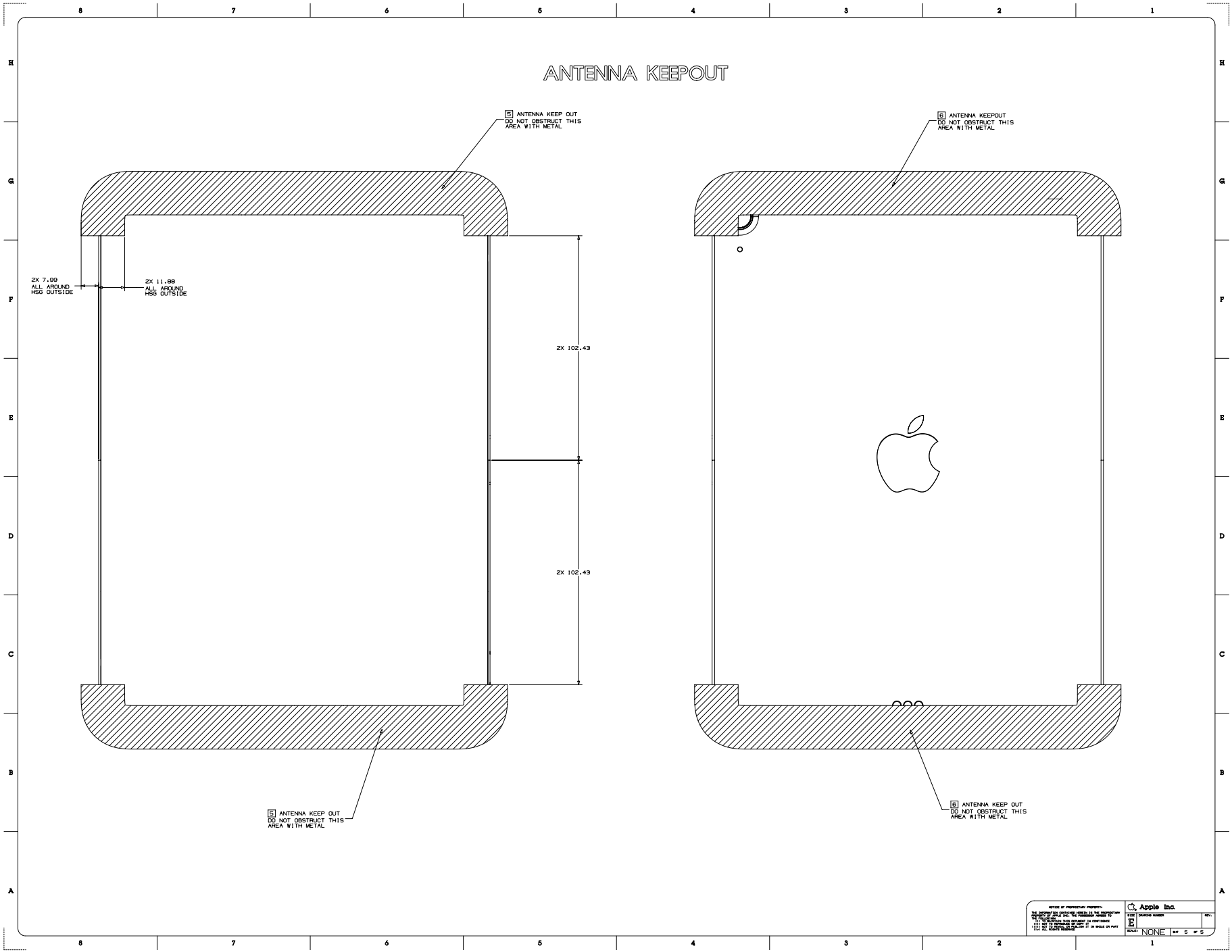

Copyright © 2022 Apple Inc. All Rights Reserved.

45.41 iPad mini (6th generation) 1 of 6

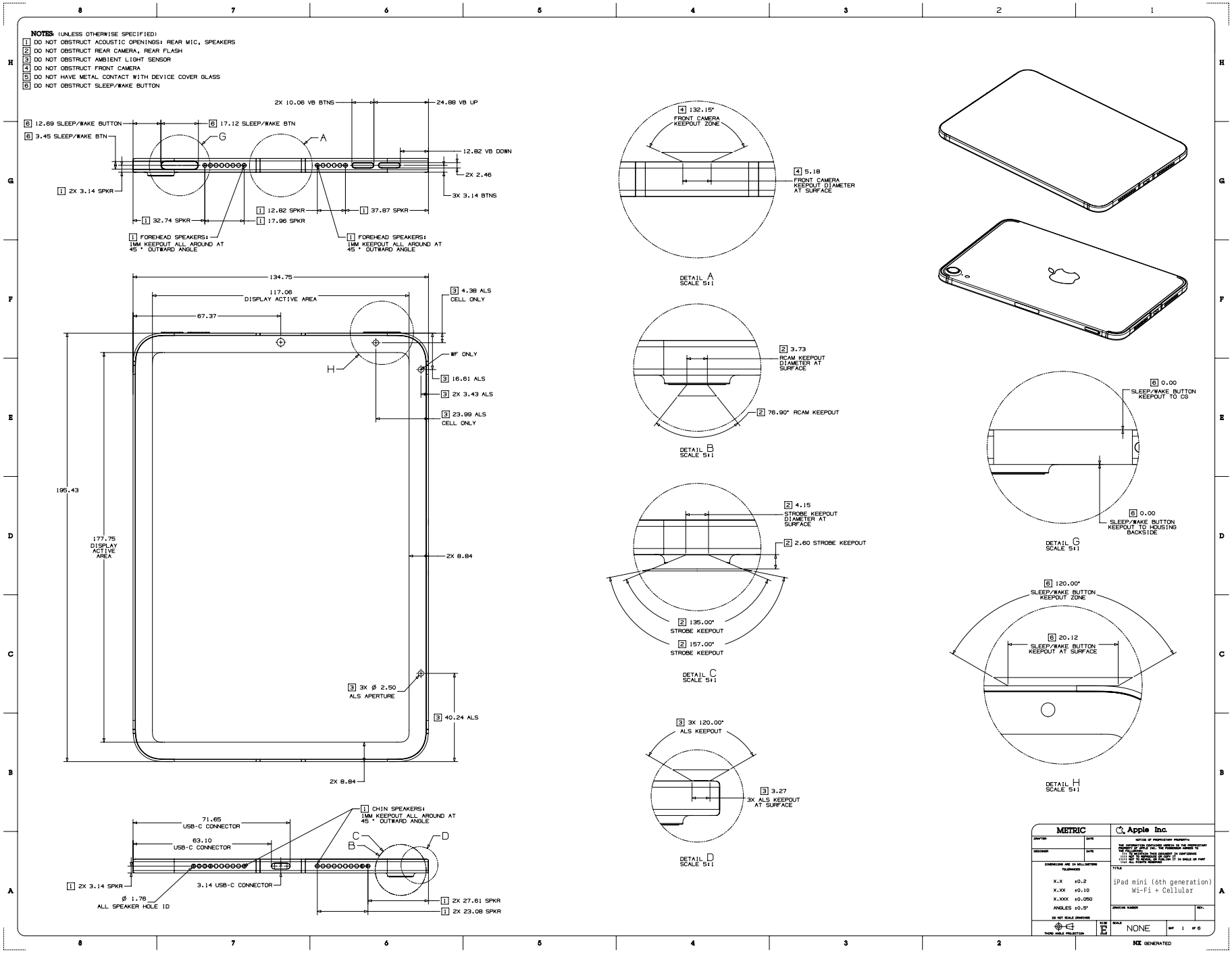

45.42 iPad mini (6th generation) 2 of 6

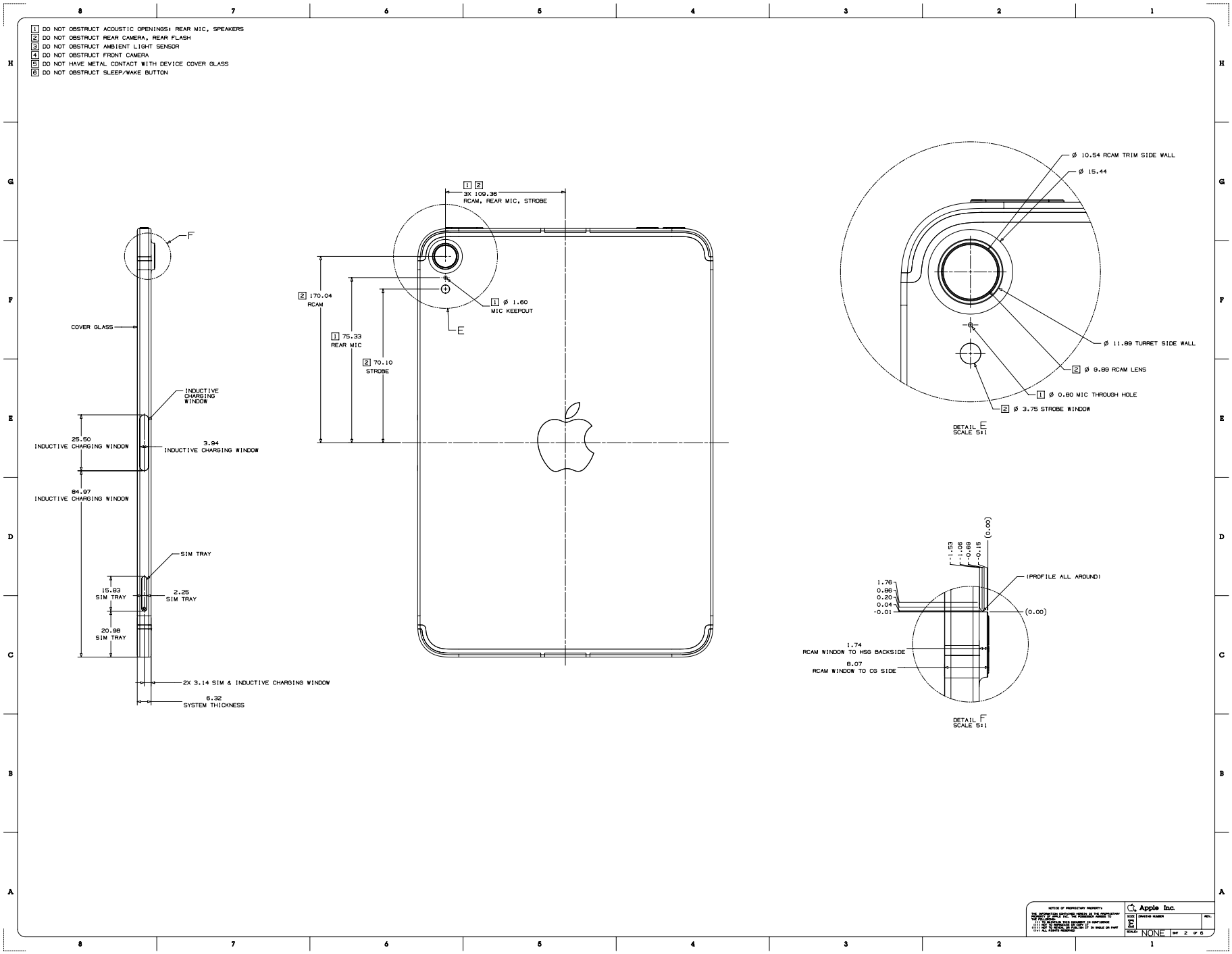

45.43 iPad mini (6th generation) 3 of 6

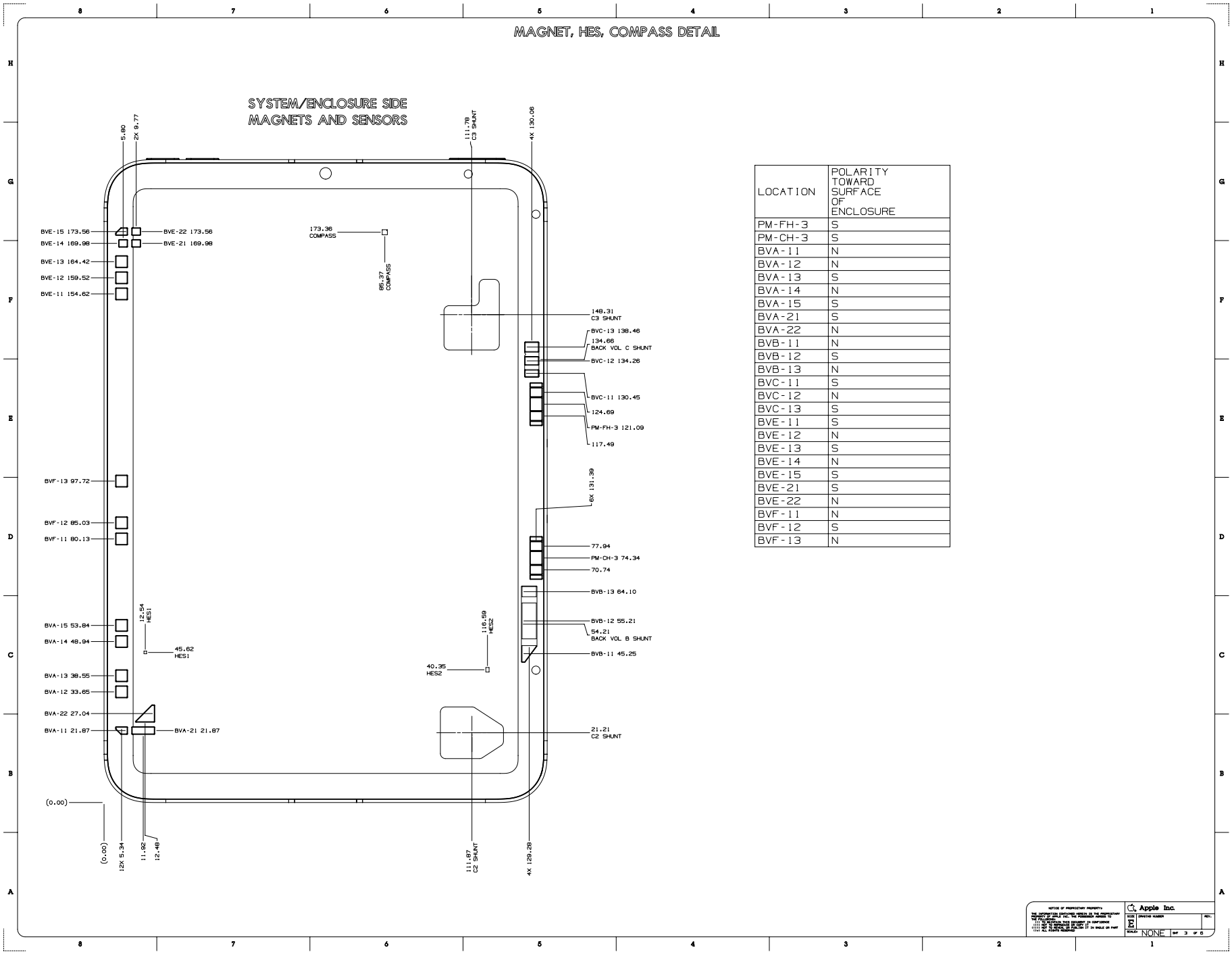

LOCATION	POLARITY TOWARD SURFACE OF ENCLOSURE
PM-FH-3	S
PM-CH-3	S
BVA-11	N
BVA-12	N
BVA-13	S
BVA-14	N
BVA-15	S
BVA-21	S
BVA-22	N
BVB-11	N
BVB-12	S
BVB-13	N
BVC-11	S
BVC-12	N
BVC-13	S
BVE-11	S
BVE-12	N
BVE-13	S
BVE-14	N
BVE-15	S
BVE-21	S
BVE-22	N
BVF-11	N
BVF-12	S
BVF-13	N

Copyright © 2022 Apple Inc. All Rights Reserved.

45.44 iPad mini (6th generation) 4 of 6

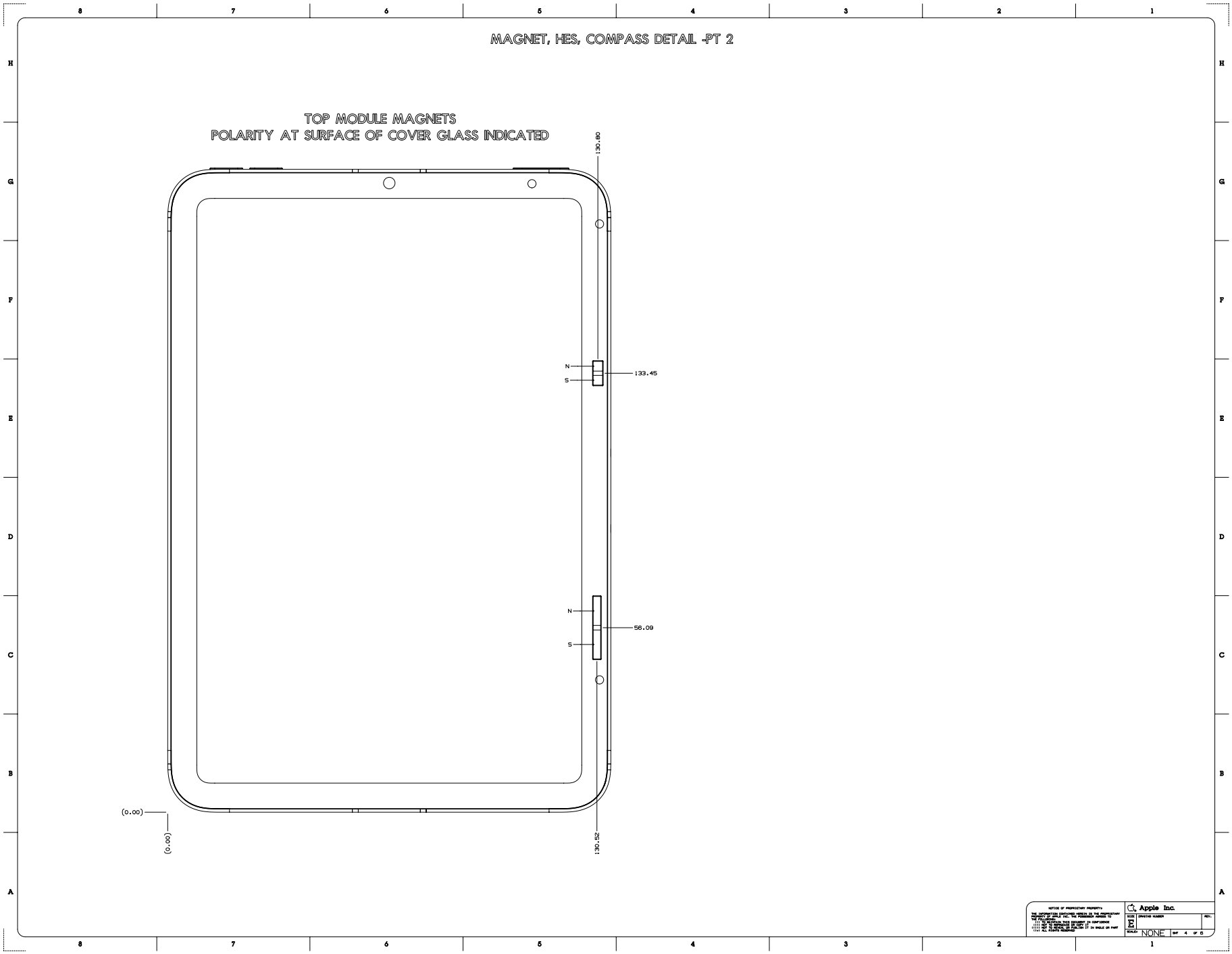

Copyright © 2022 Apple Inc. All Rights Reserved.

45.45 iPad mini (6th generation) 5 of 6

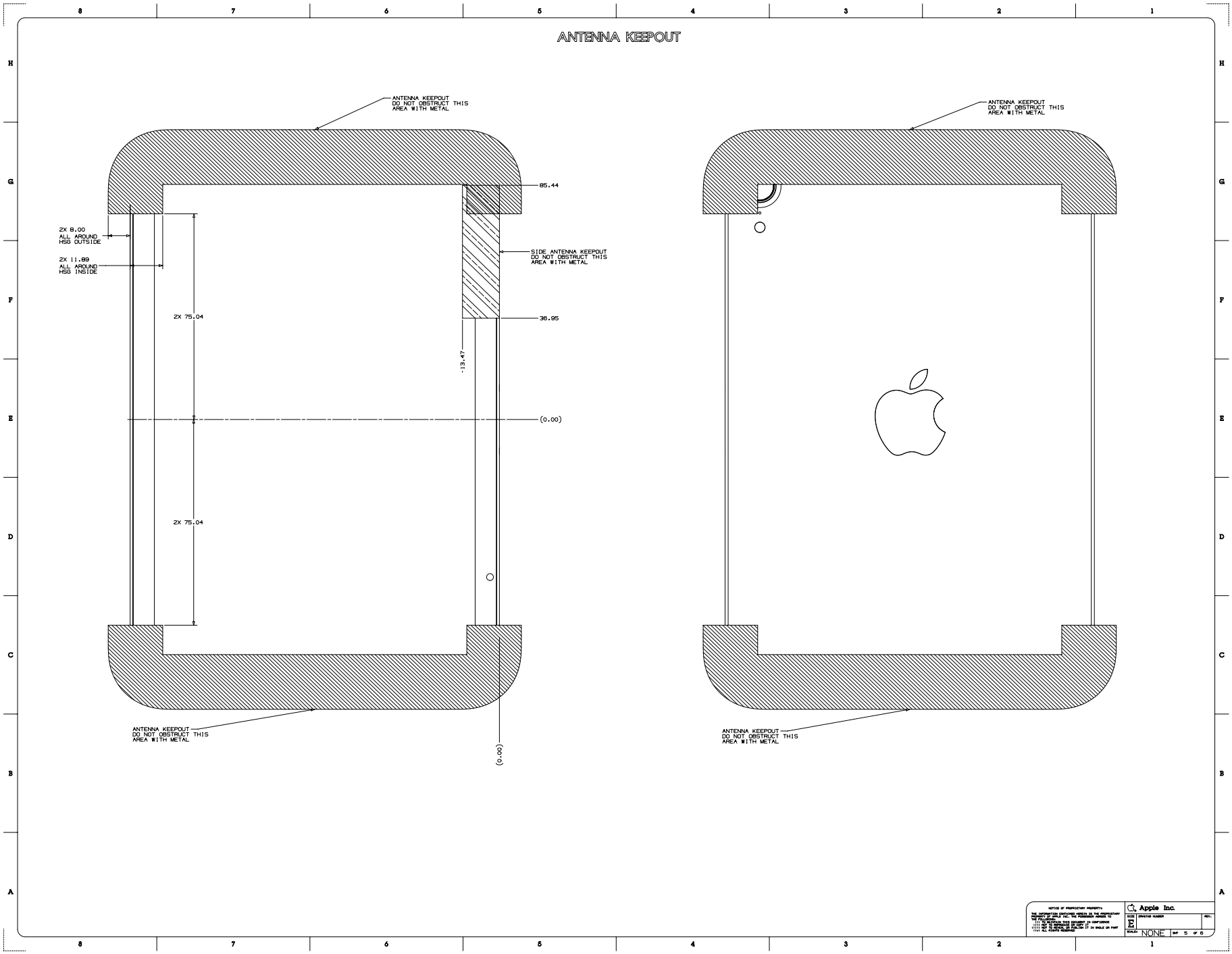

45.46 iPad mini (6th generation) 6 of 6

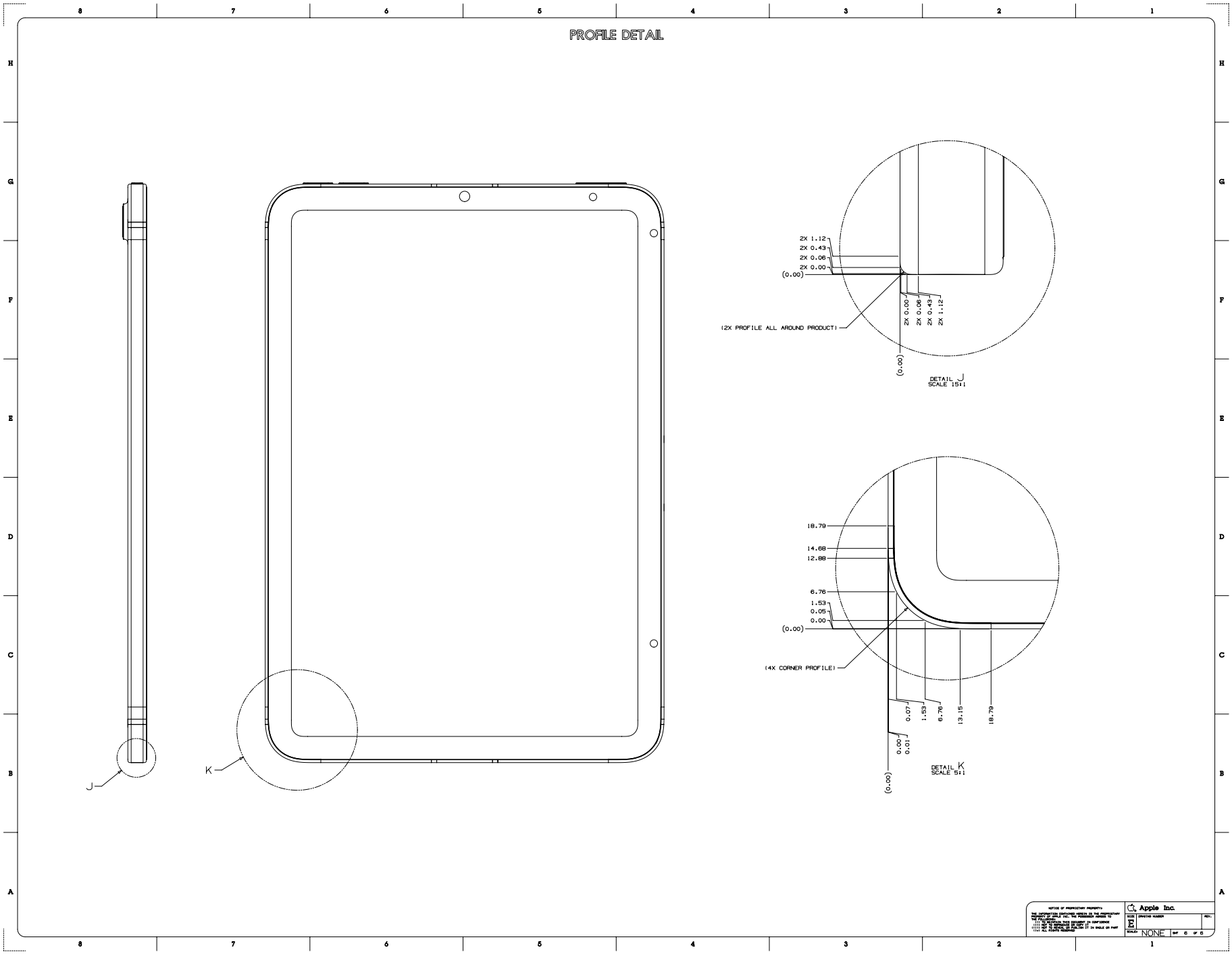

45.47 iPad (9th generation), iPad (8th generation) and iPad (7th generation) 1 of 4

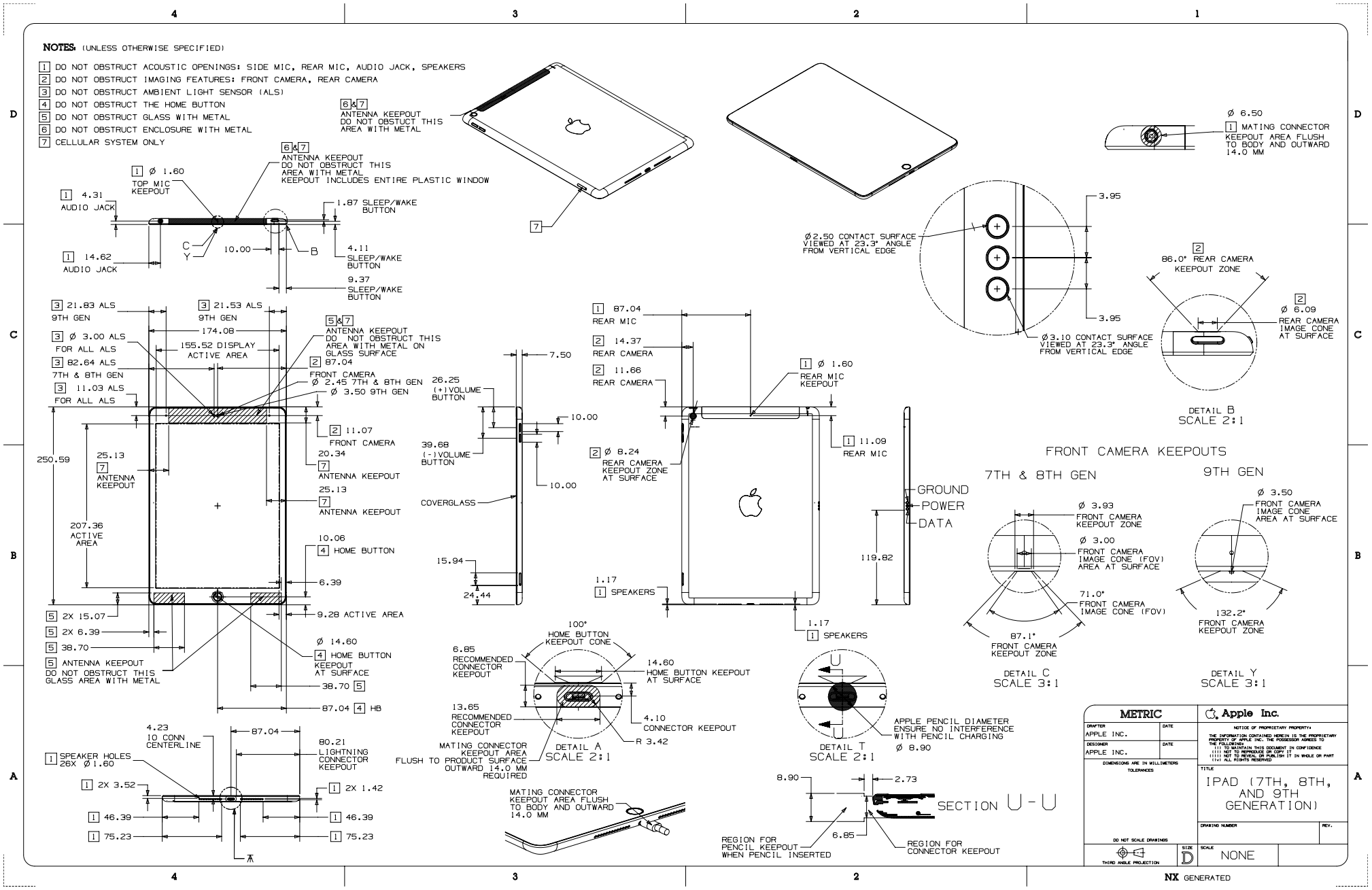

45.48 iPad (9th generation), iPad (8th generation) and iPad (7th generation) 2 of 4

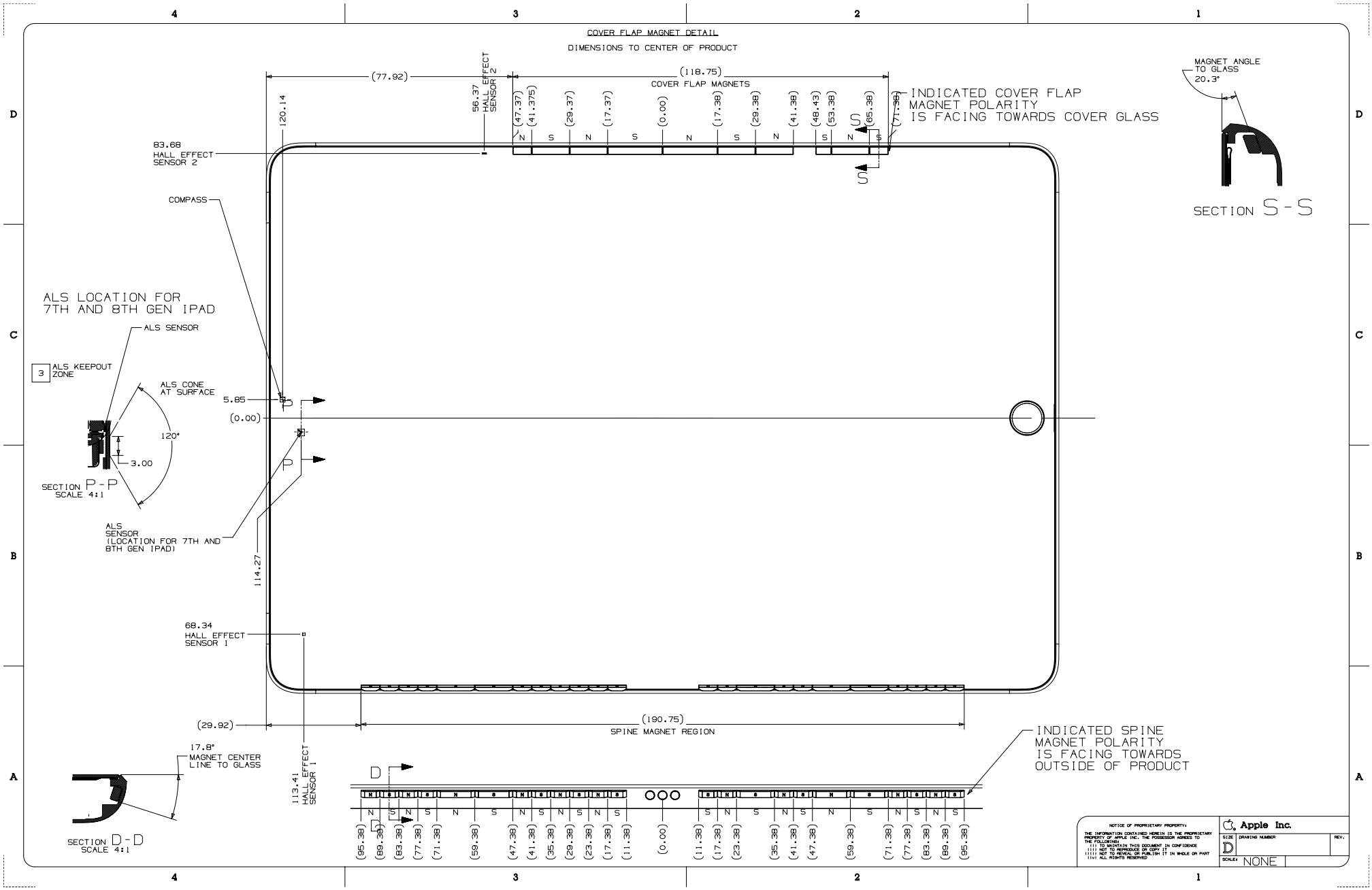

45.49 iPad (9th generation), iPad (8th generation) and iPad (7th generation) 3 of 4

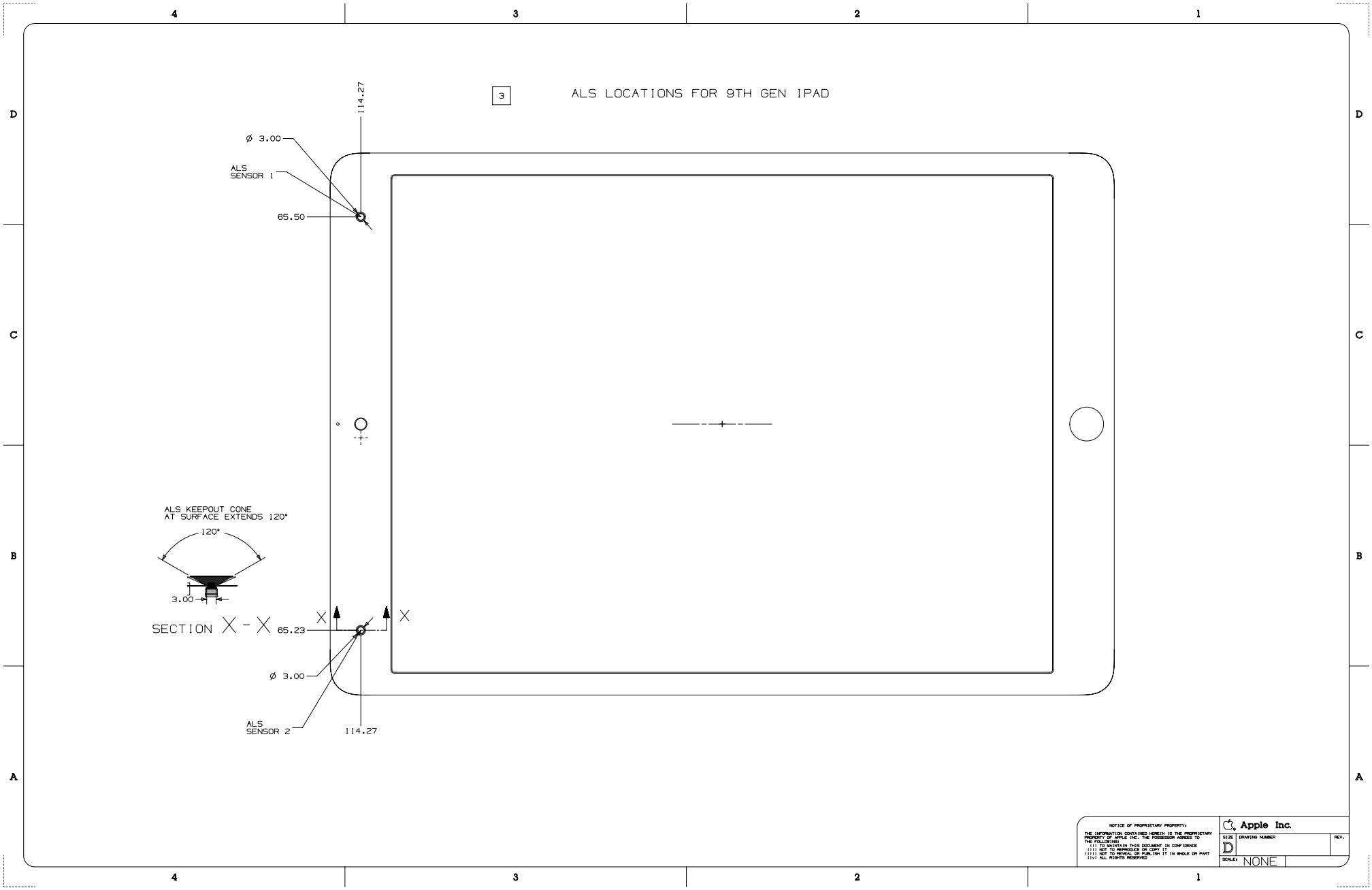

45.50 iPad (9th generation), iPad (8th generation) and iPad (7th generation) 4 of 4

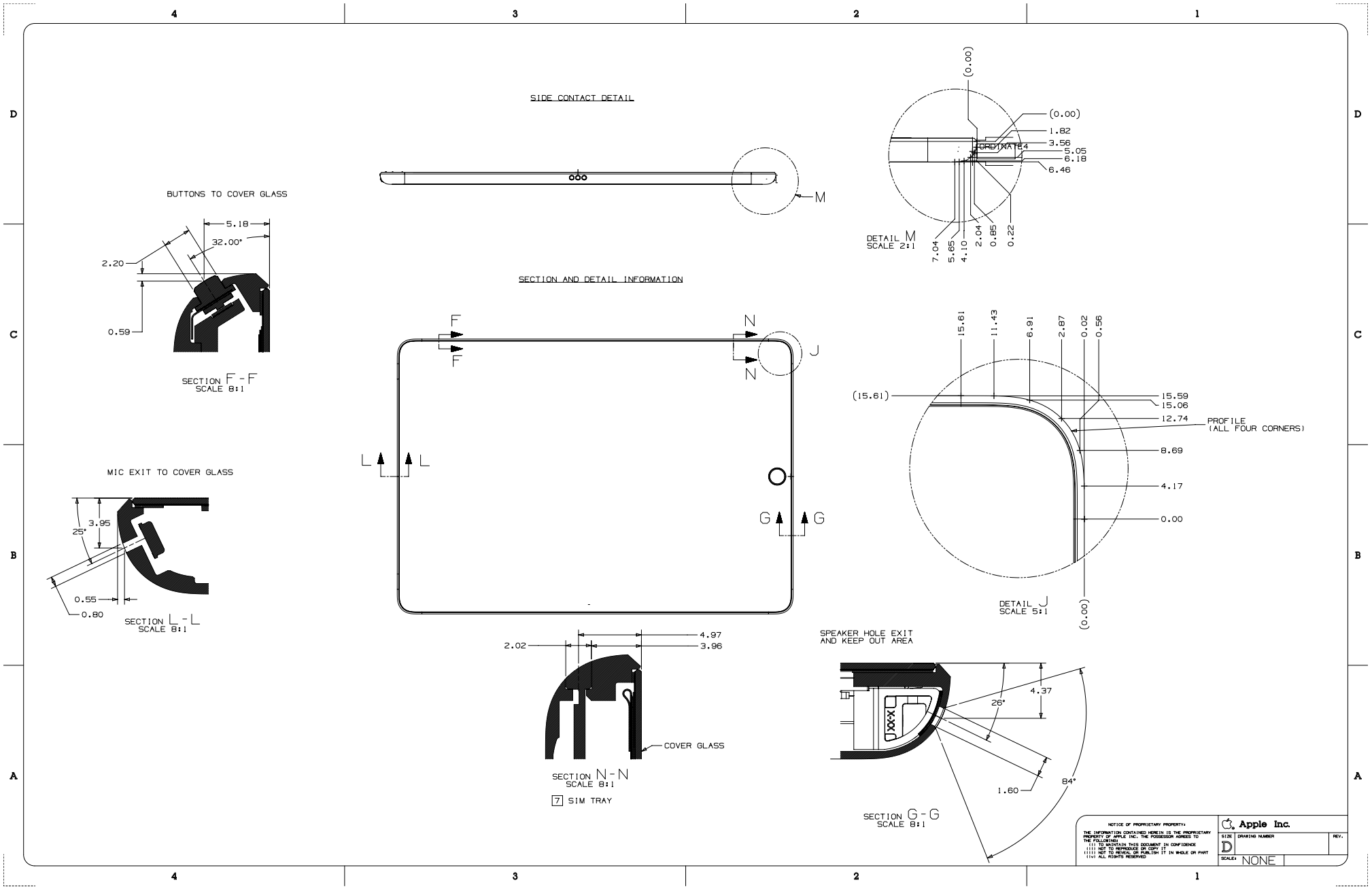

45.51 iPad Pro (12.9-inch) 5th Generation 1 of 5

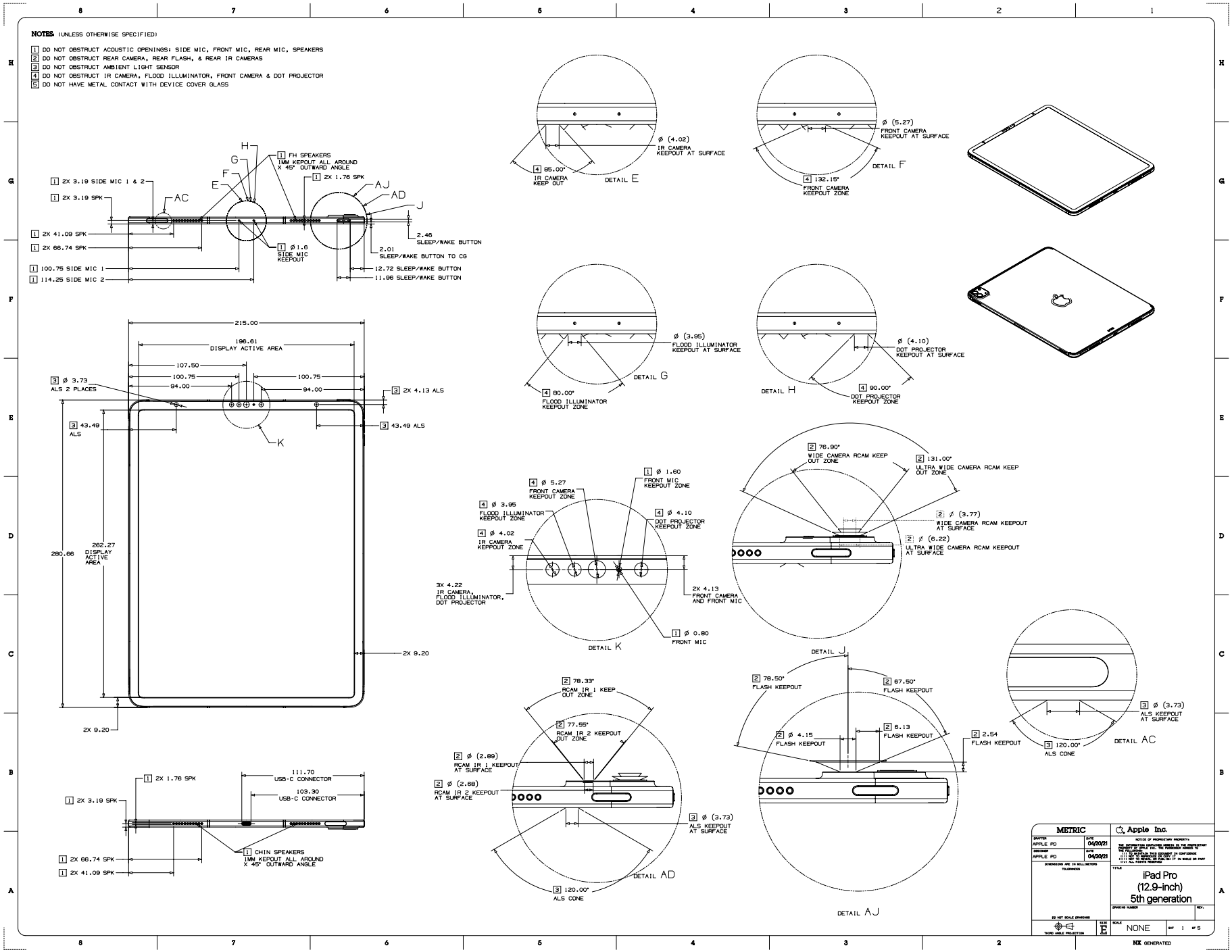

45.52 iPad Pro (12.9-inch) 5th Generation 2 of 5

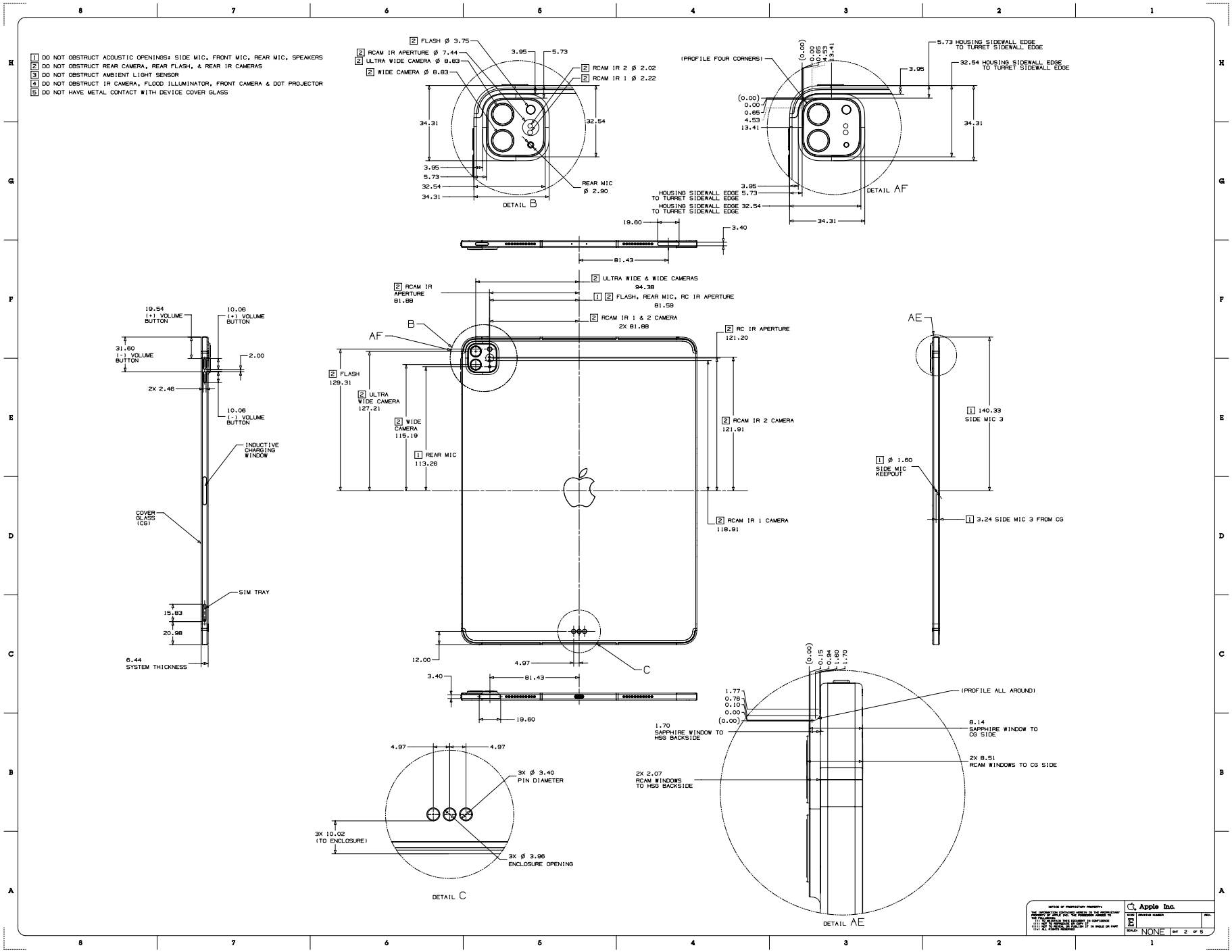

45.53 iPad Pro (12.9-inch) 5th Generation 3 of 5

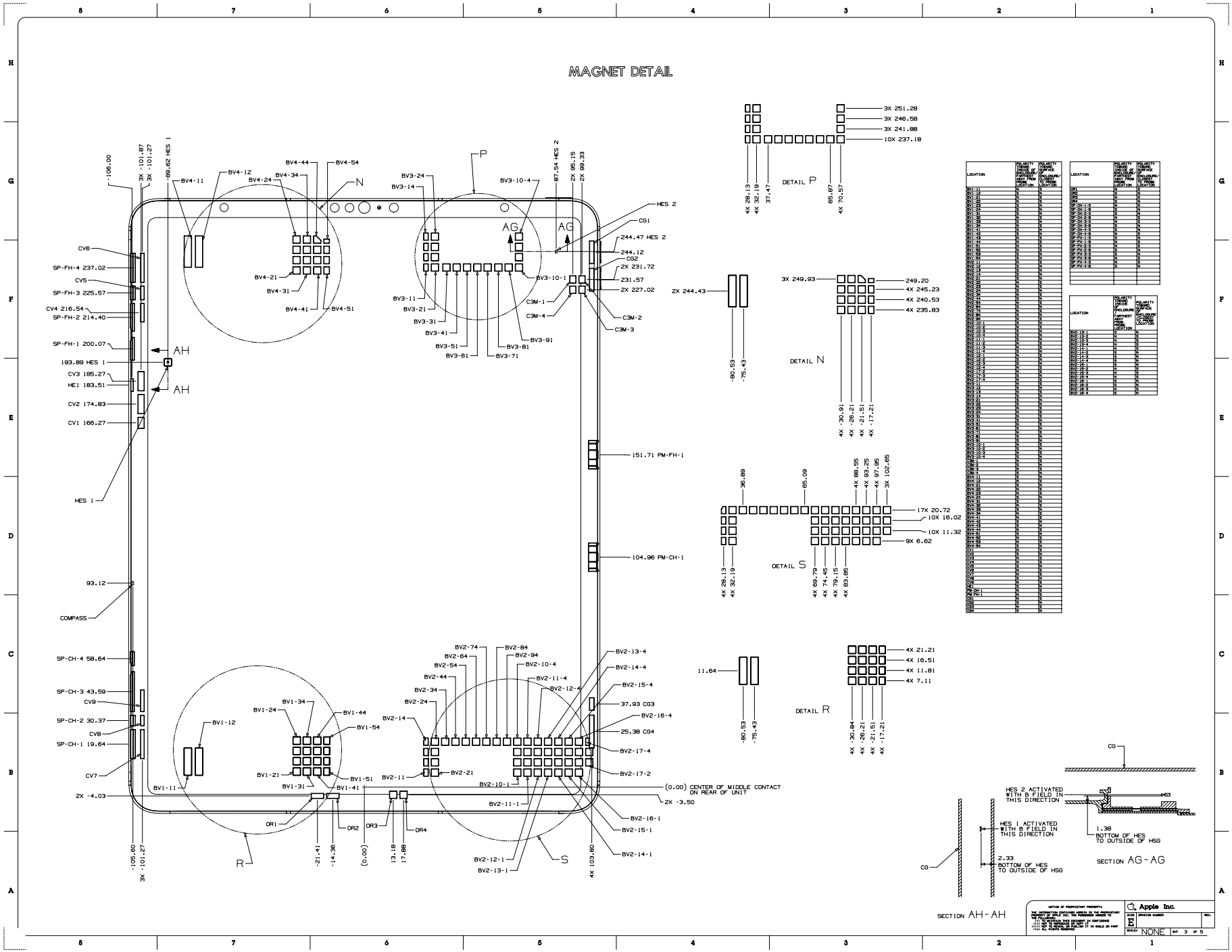

45.54 iPad Pro (12.9-inch) 5th Generation 4 of 5

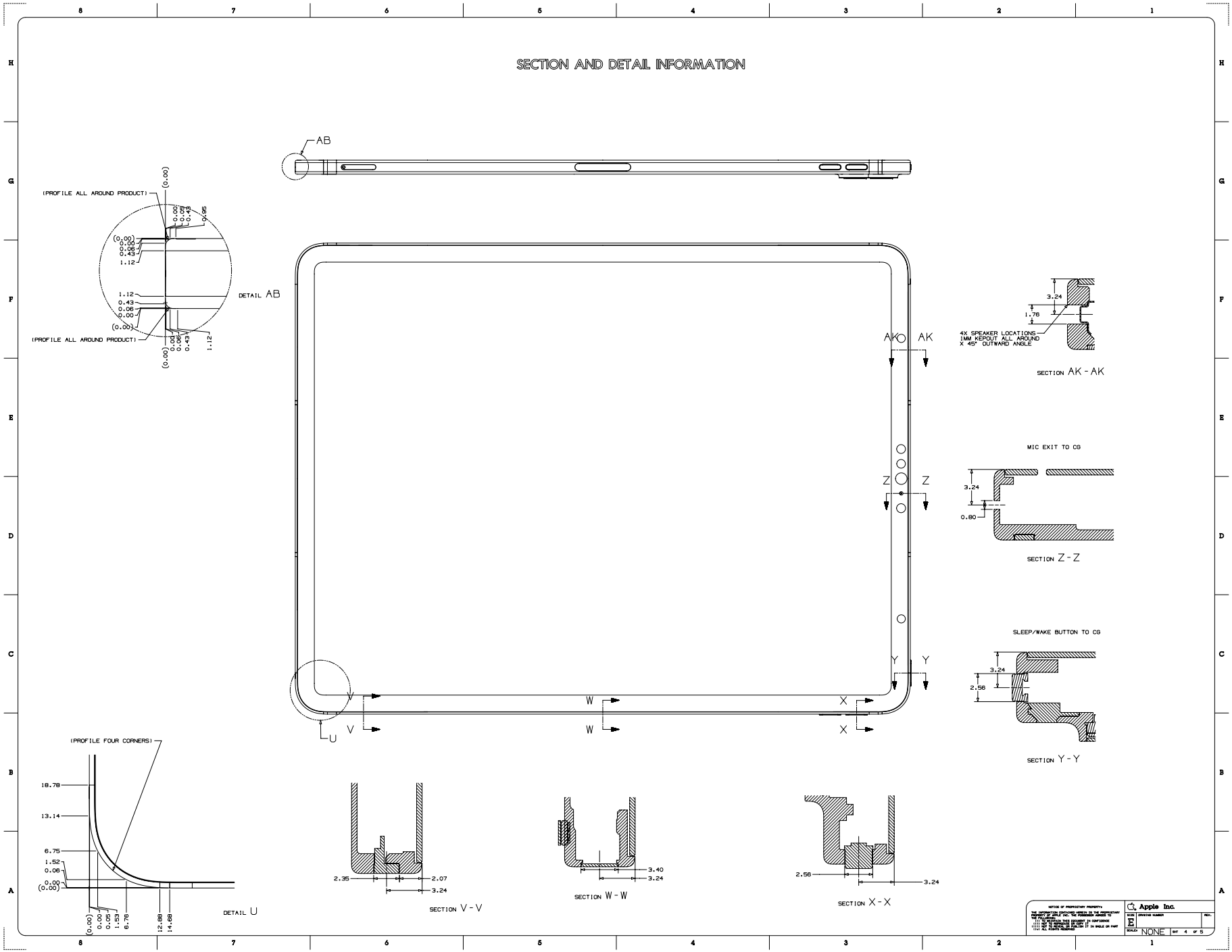

45.55 iPad Pro (12.9-inch) 5th Generation 5 of 5

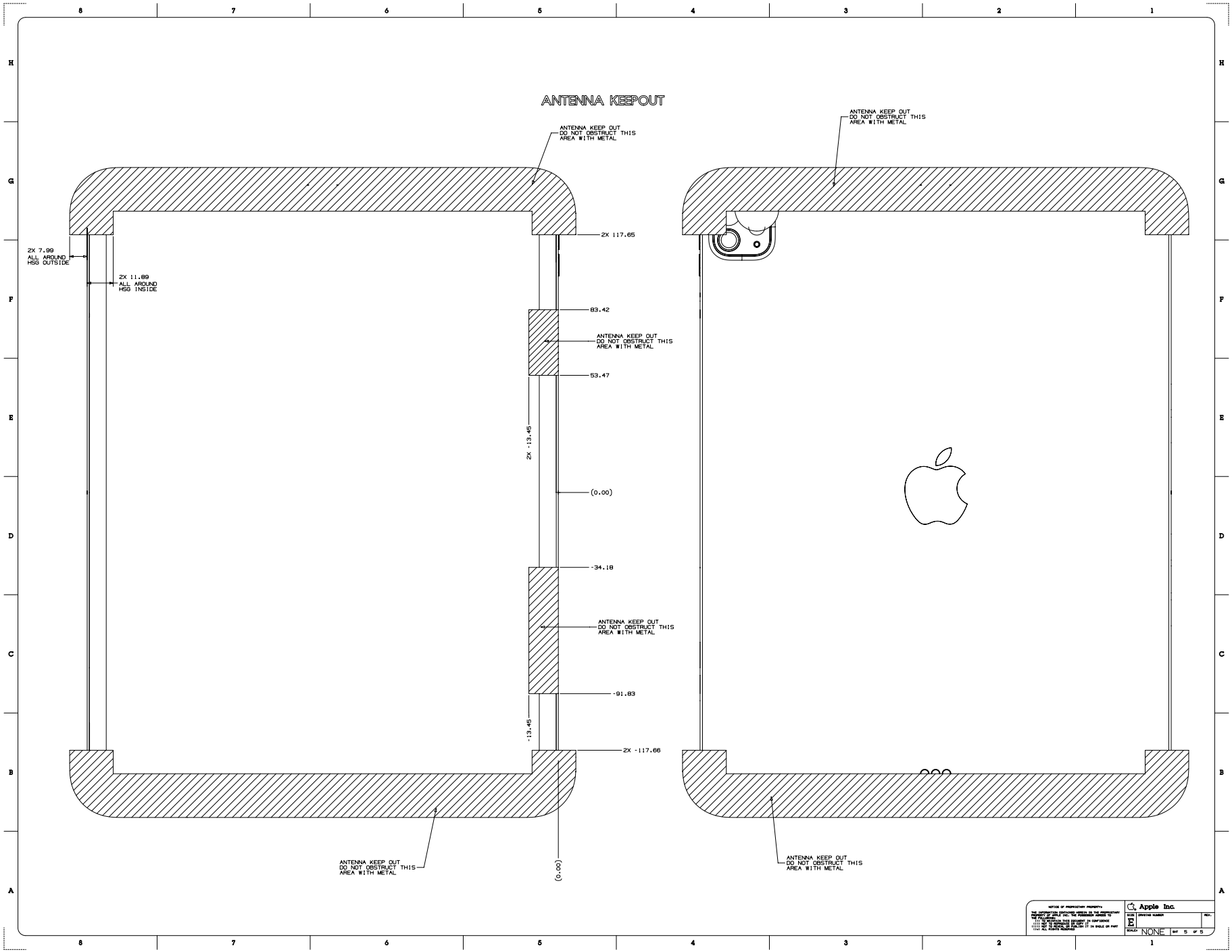

Copyright © 2022 Apple Inc. All Rights Reserved.

45.56 iPad Pro (11-inch) 3rd Generation 1 of 5

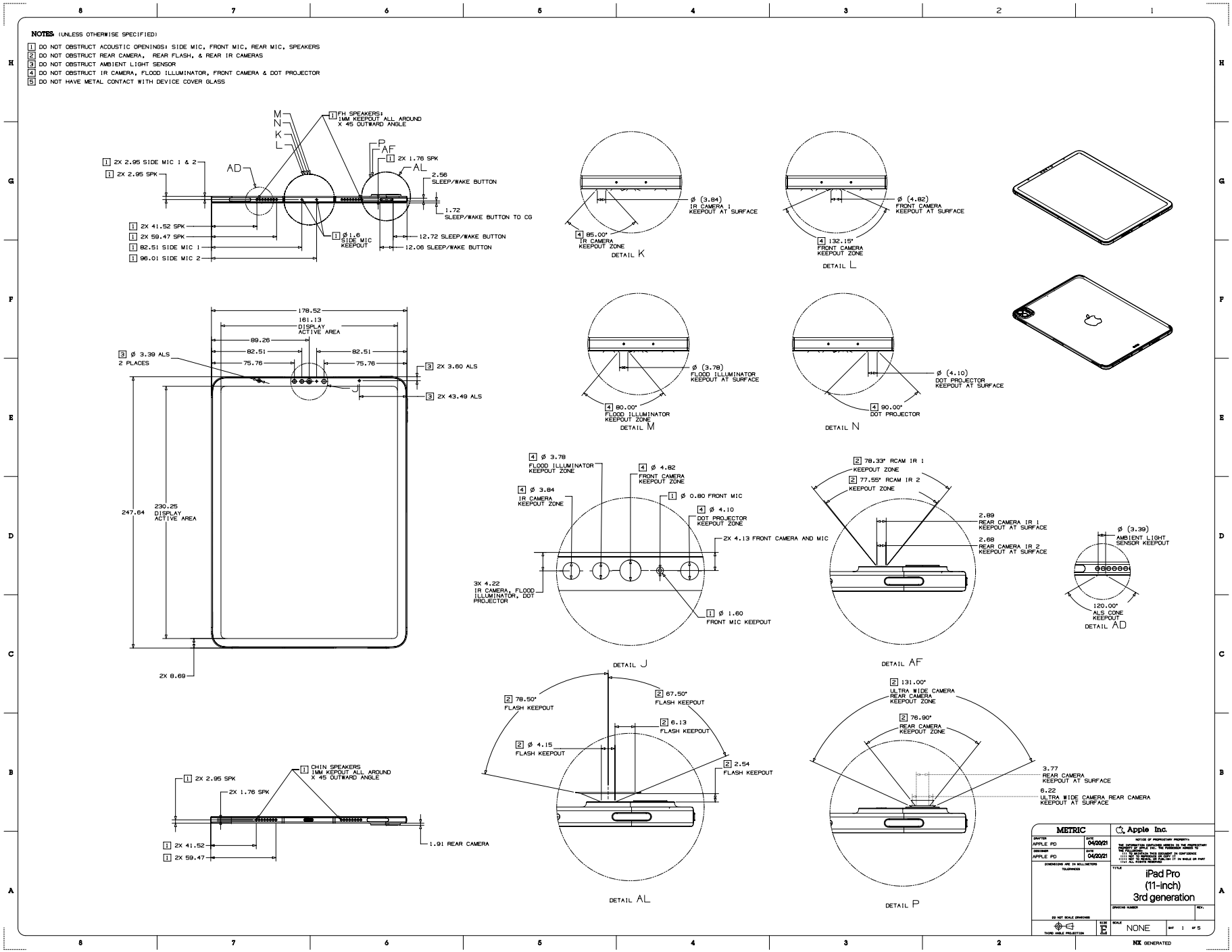

45.57 iPad Pro (11-inch) 3rd Generation 2 of 5

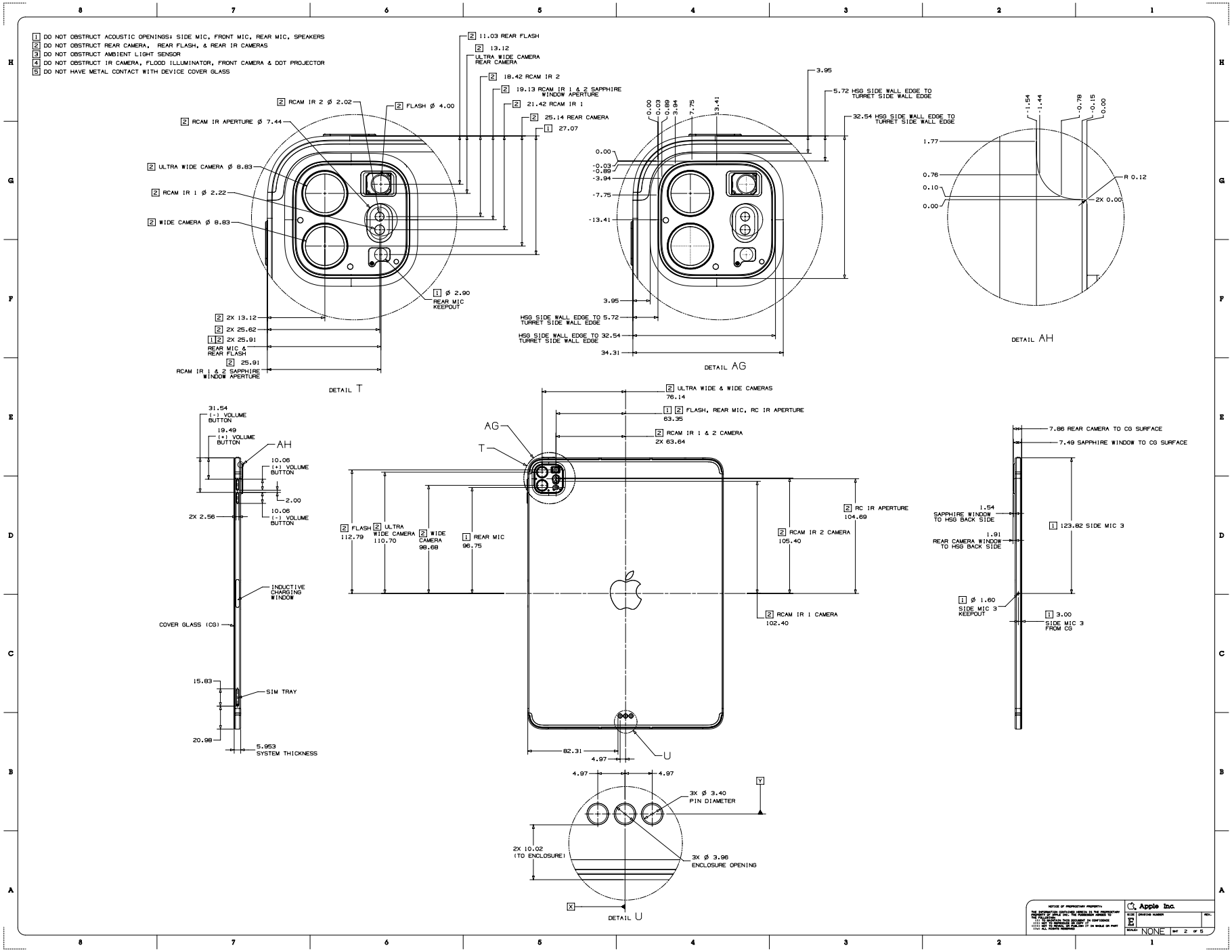

45.58 iPad Pro (11-inch) 3rd Generation 3 of 5

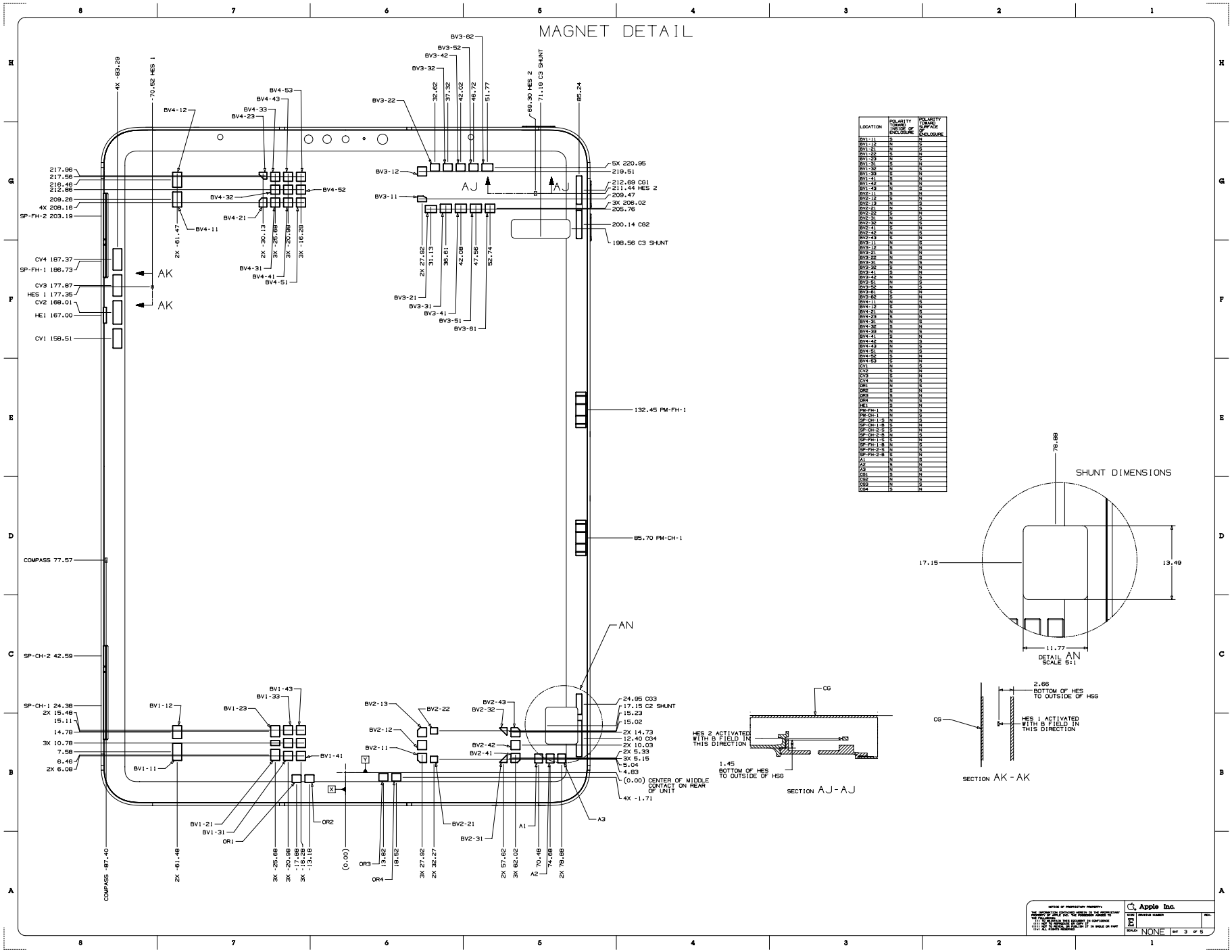

45.59 iPad Pro (11-inch) 3rd Generation 4 of 5

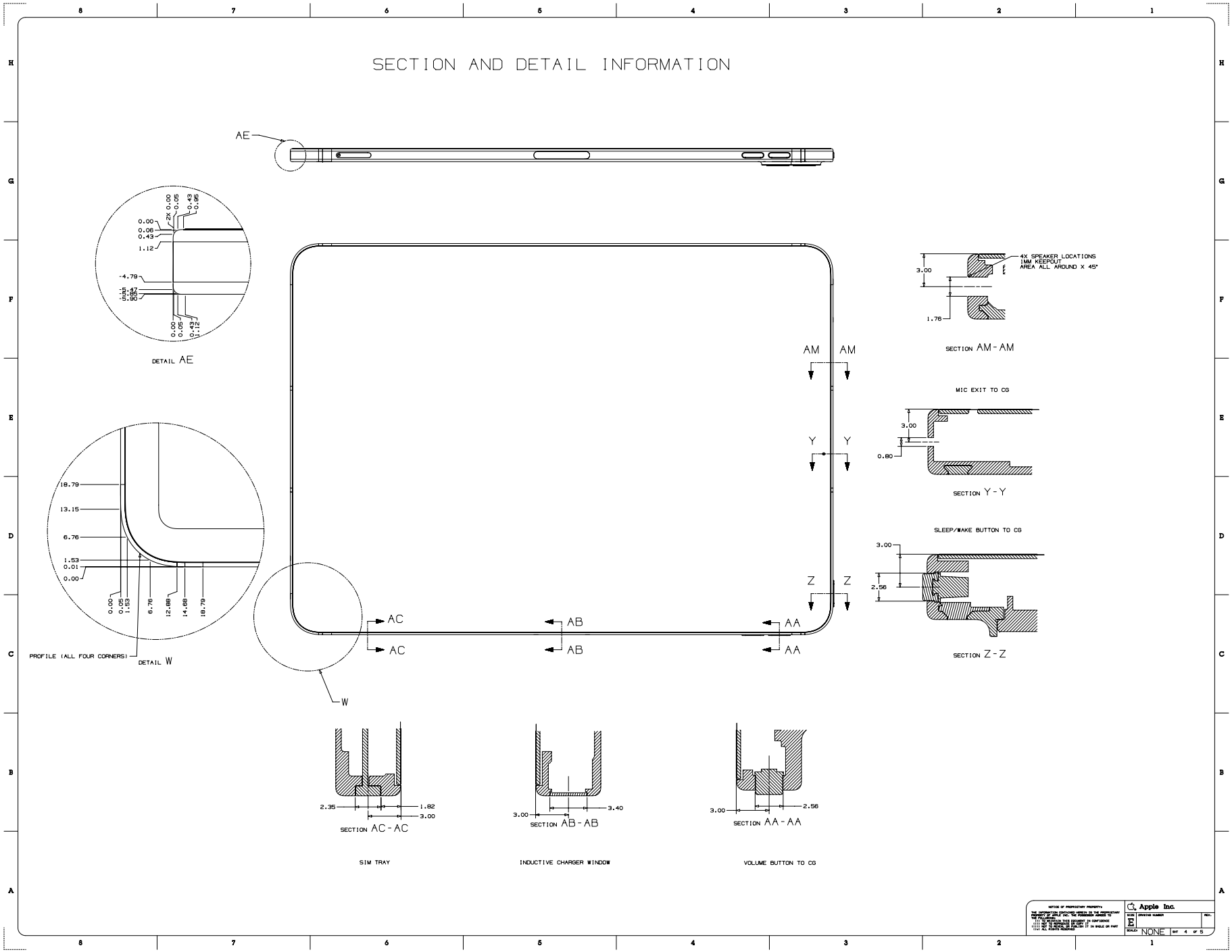

45.60 iPad Pro (11-inch) 3rd Generation 5 of 5

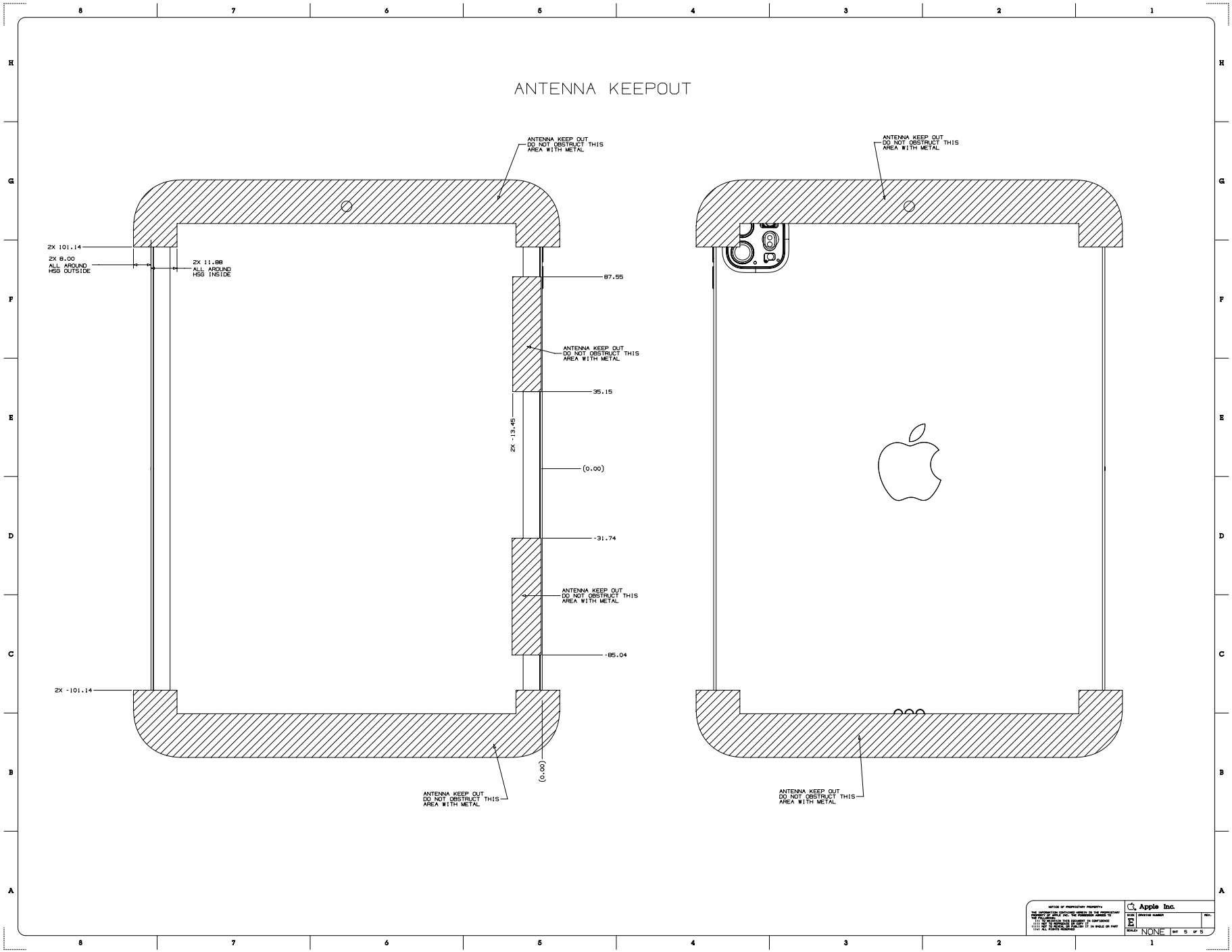

Copyright © 2022 Apple Inc. All Rights Reserved.

45.61 iPad Pro (12.9-inch) 4th Generation 1 of 5

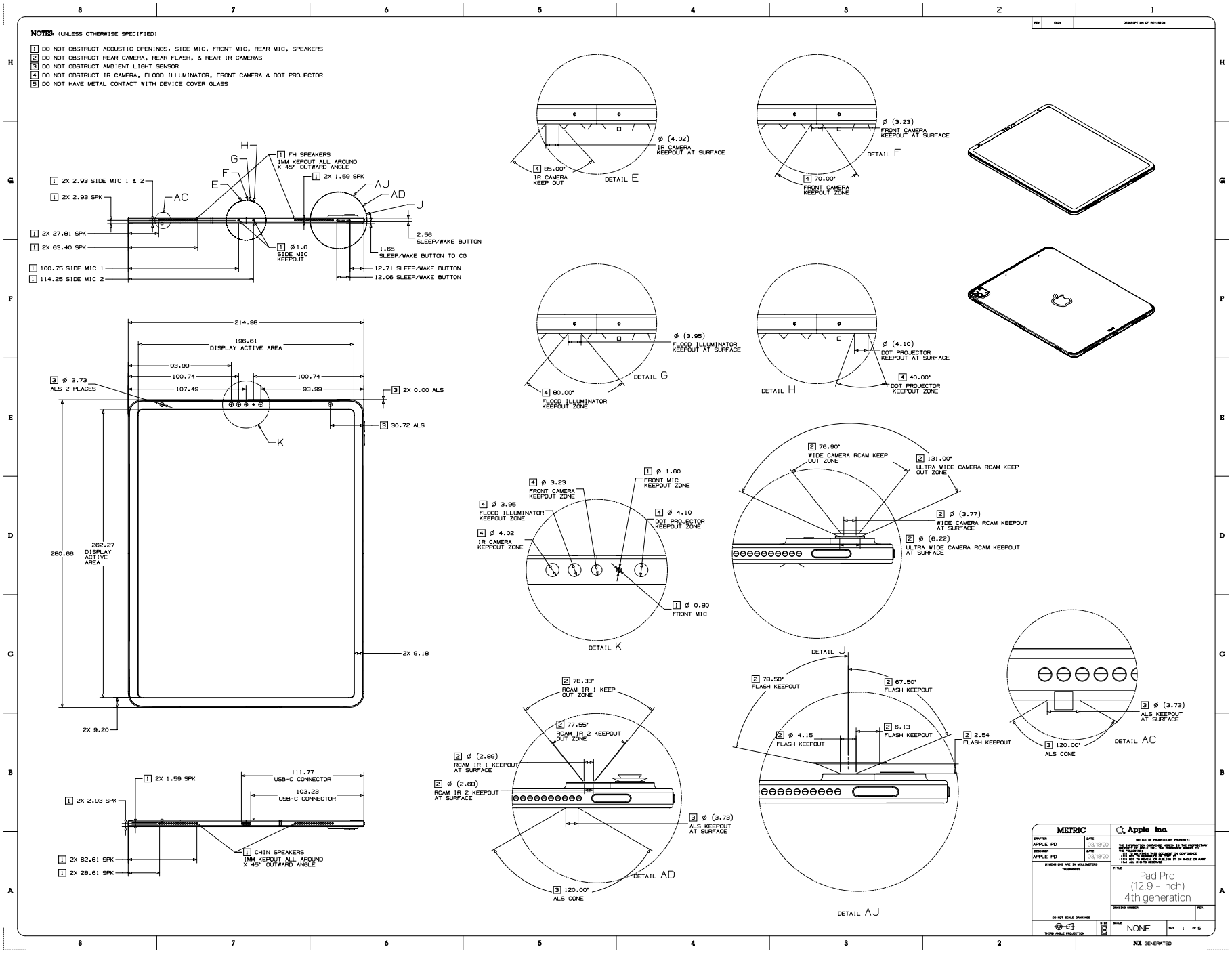

45.62 iPad Pro (12.9-inch) 4th Generation 2 of 5

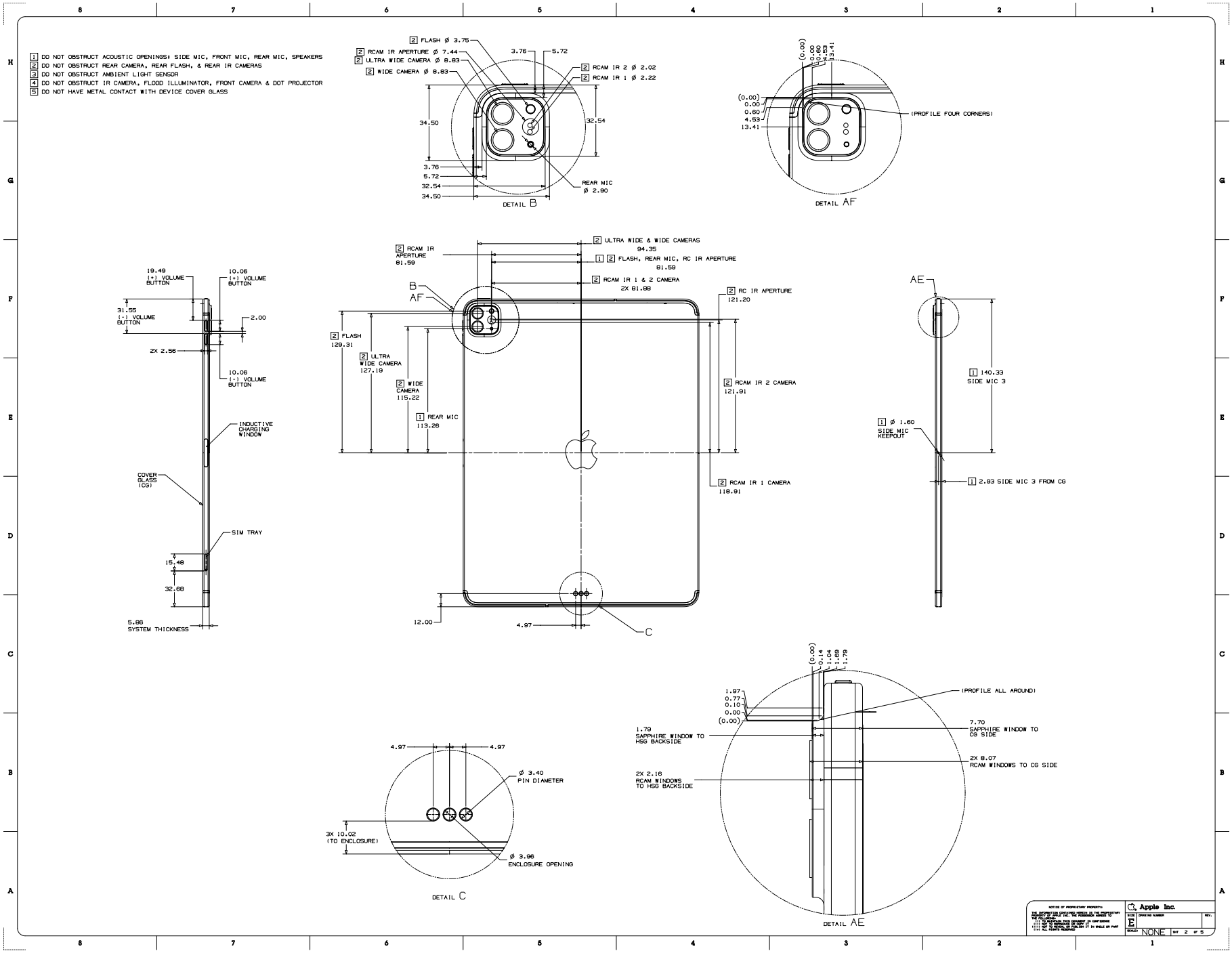

45.63 iPad Pro (12.9-inch) 4th Generation 3 of 5

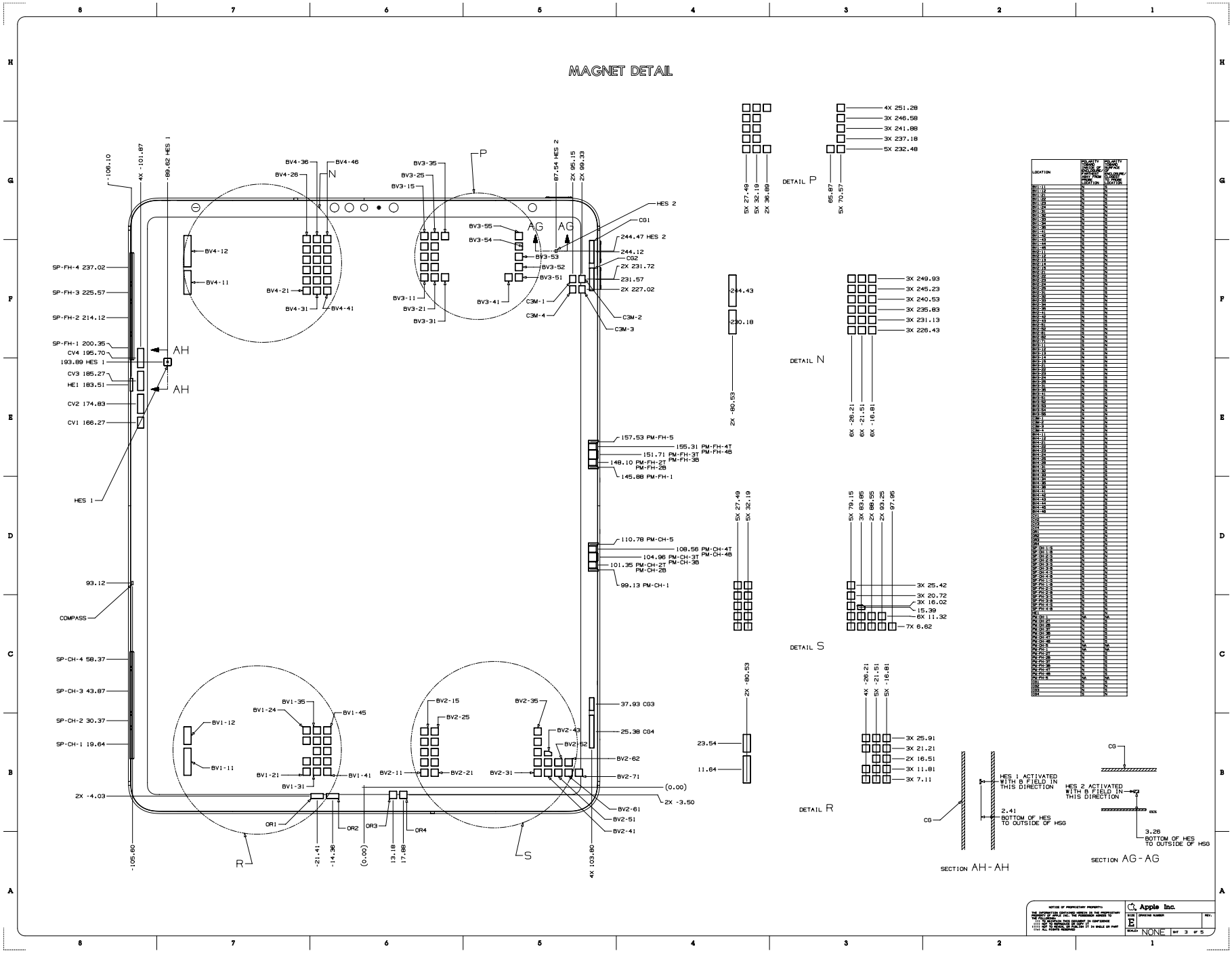

45.64 iPad Pro (12.9-inch) 4th Generation 4 of 5

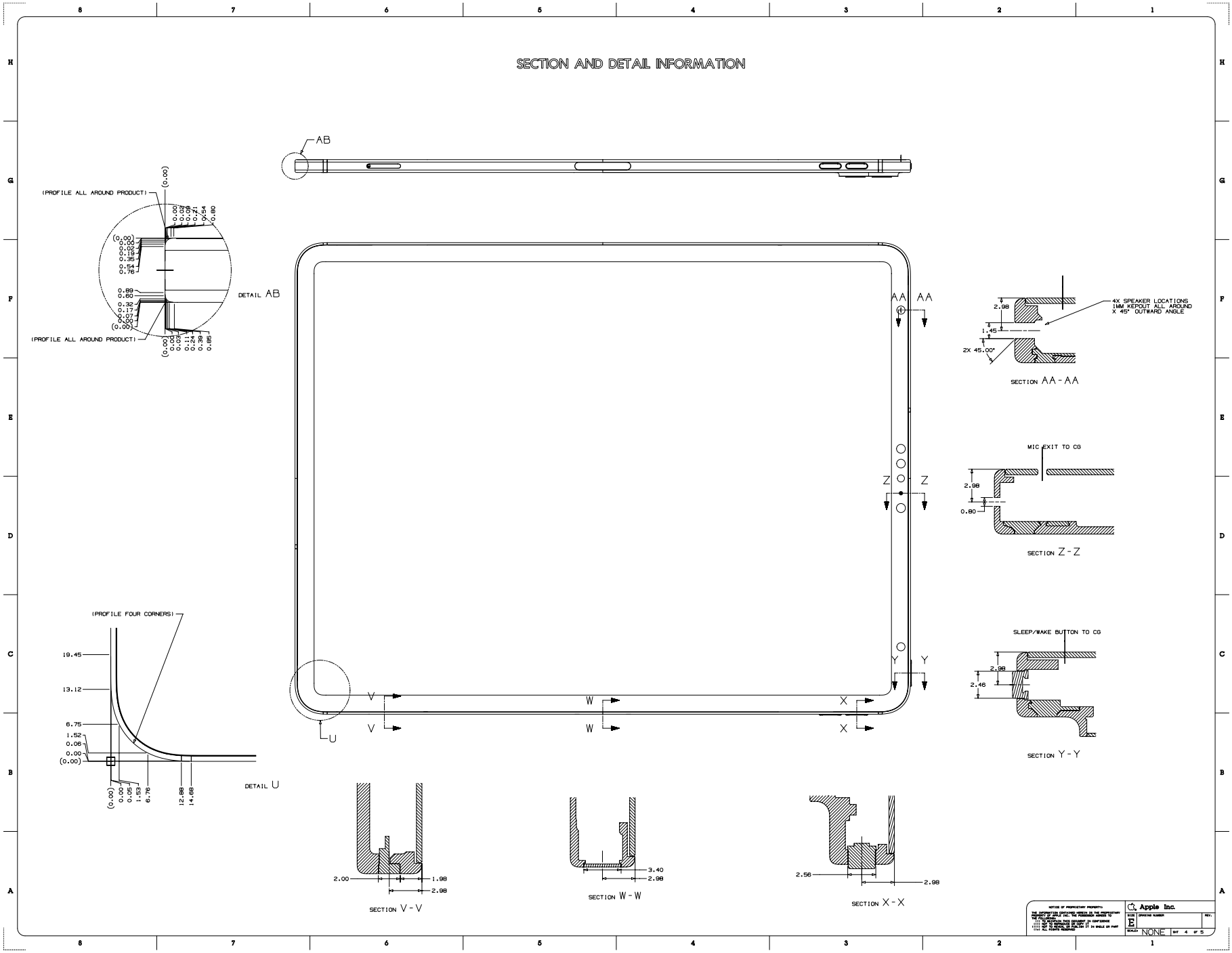

45.65 iPad Pro (12.9-inch) 4th Generation 5 of 5

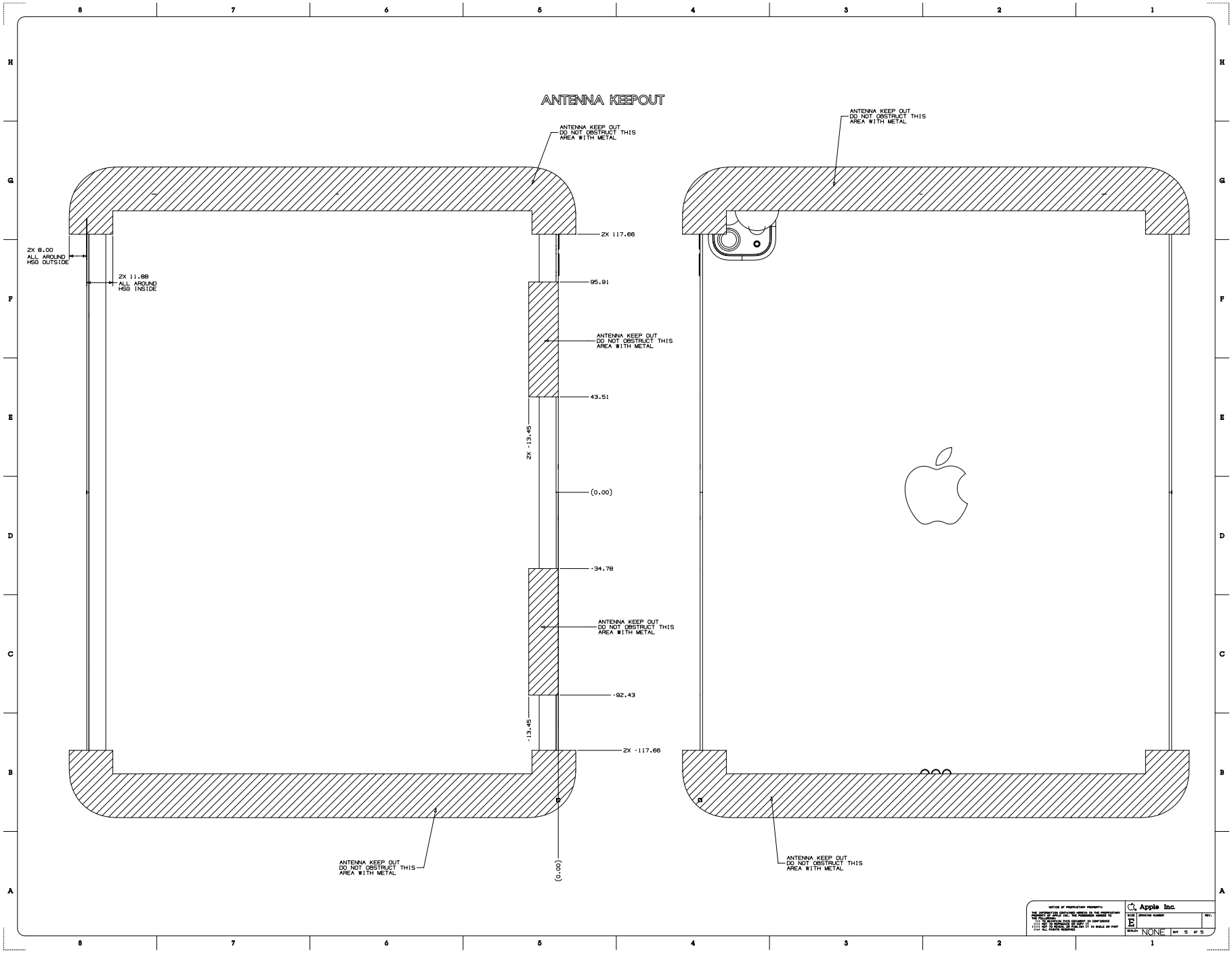

Copyright © 2022 Apple Inc. All Rights Reserved.

45.66 iPad Pro (11-inch) 2nd Generation 1 of 5

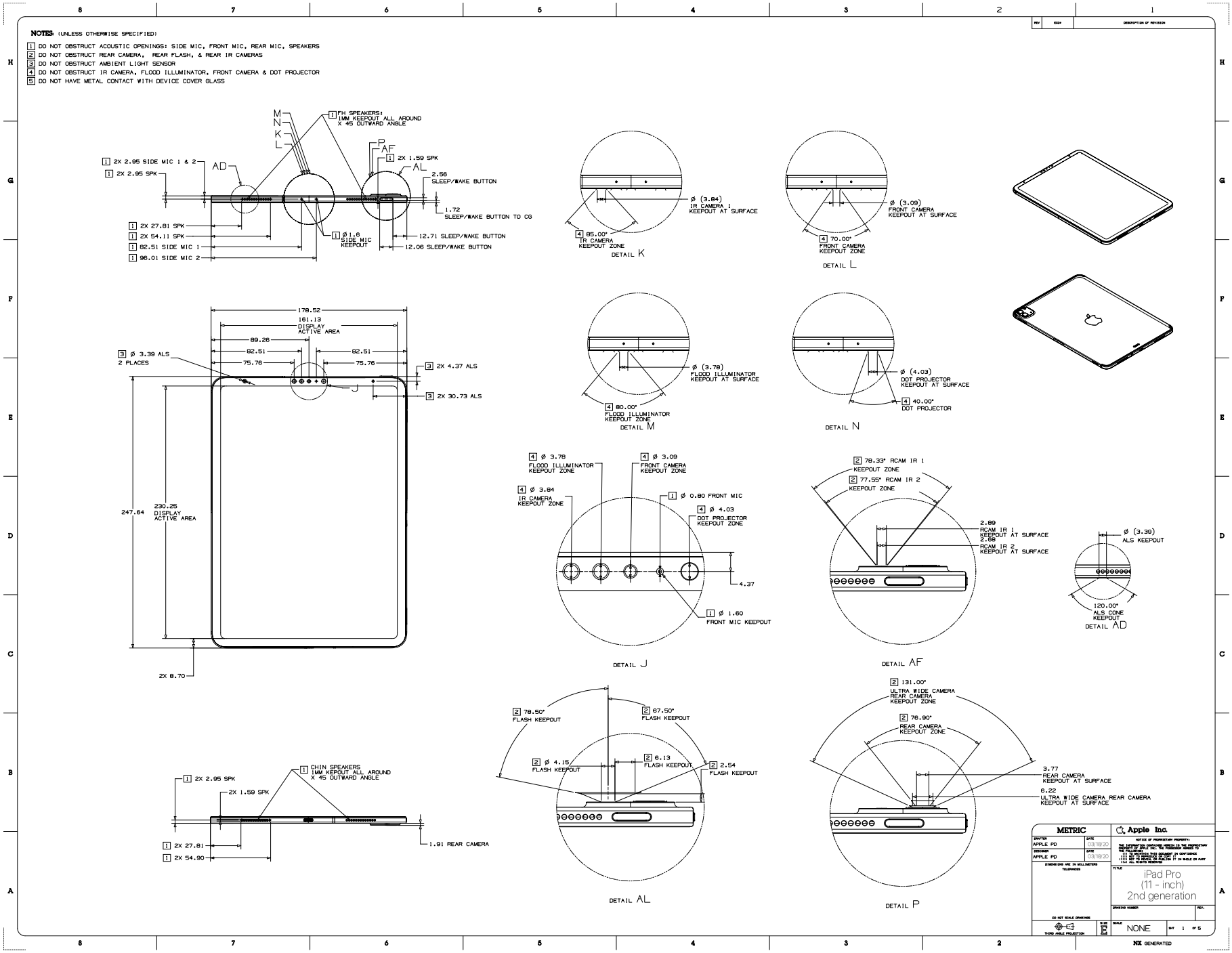

45.67 iPad Pro (11-inch) 2nd Generation 2 of 5

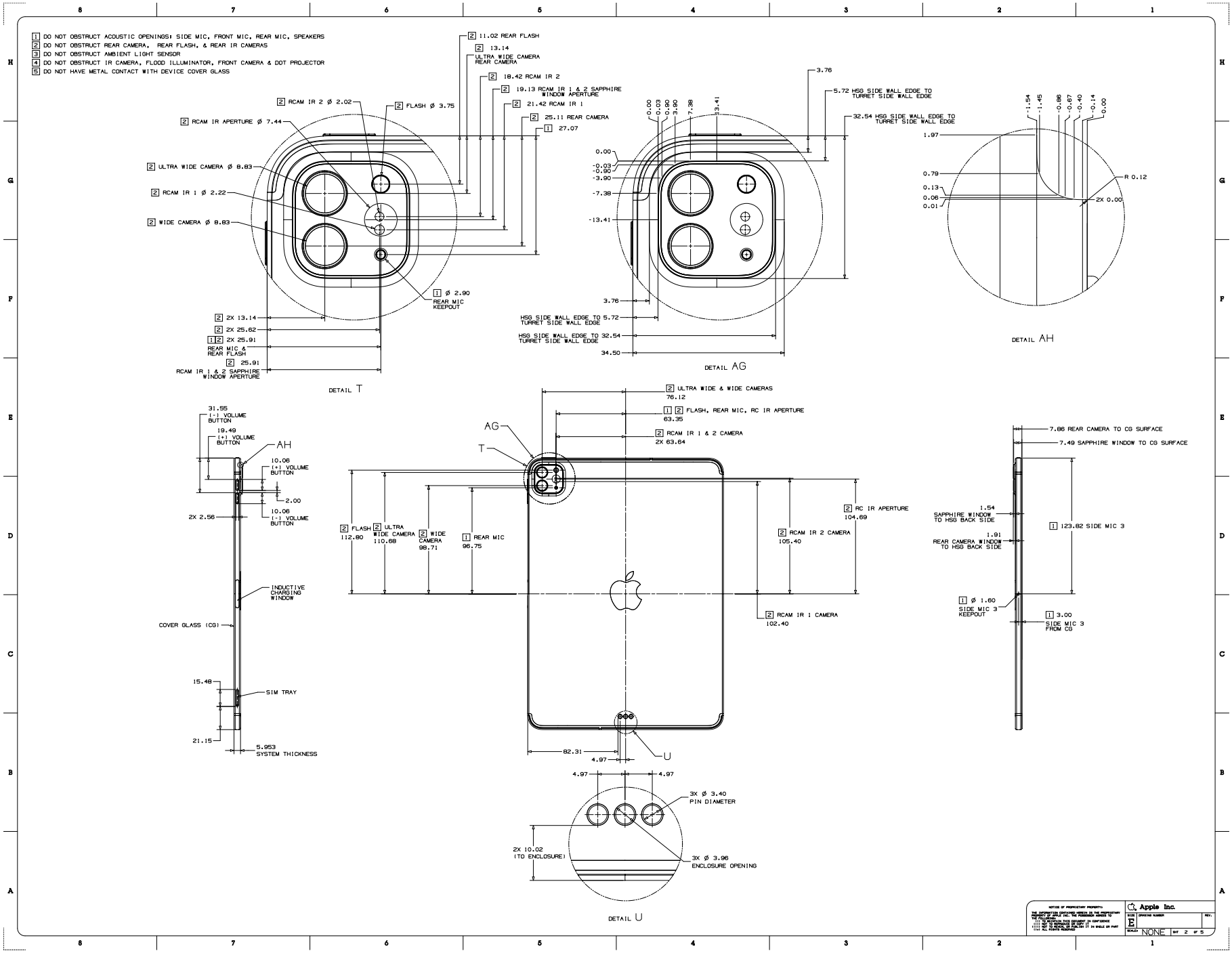

45.68 iPad Pro (11-inch) 2nd Generation 3 of 5

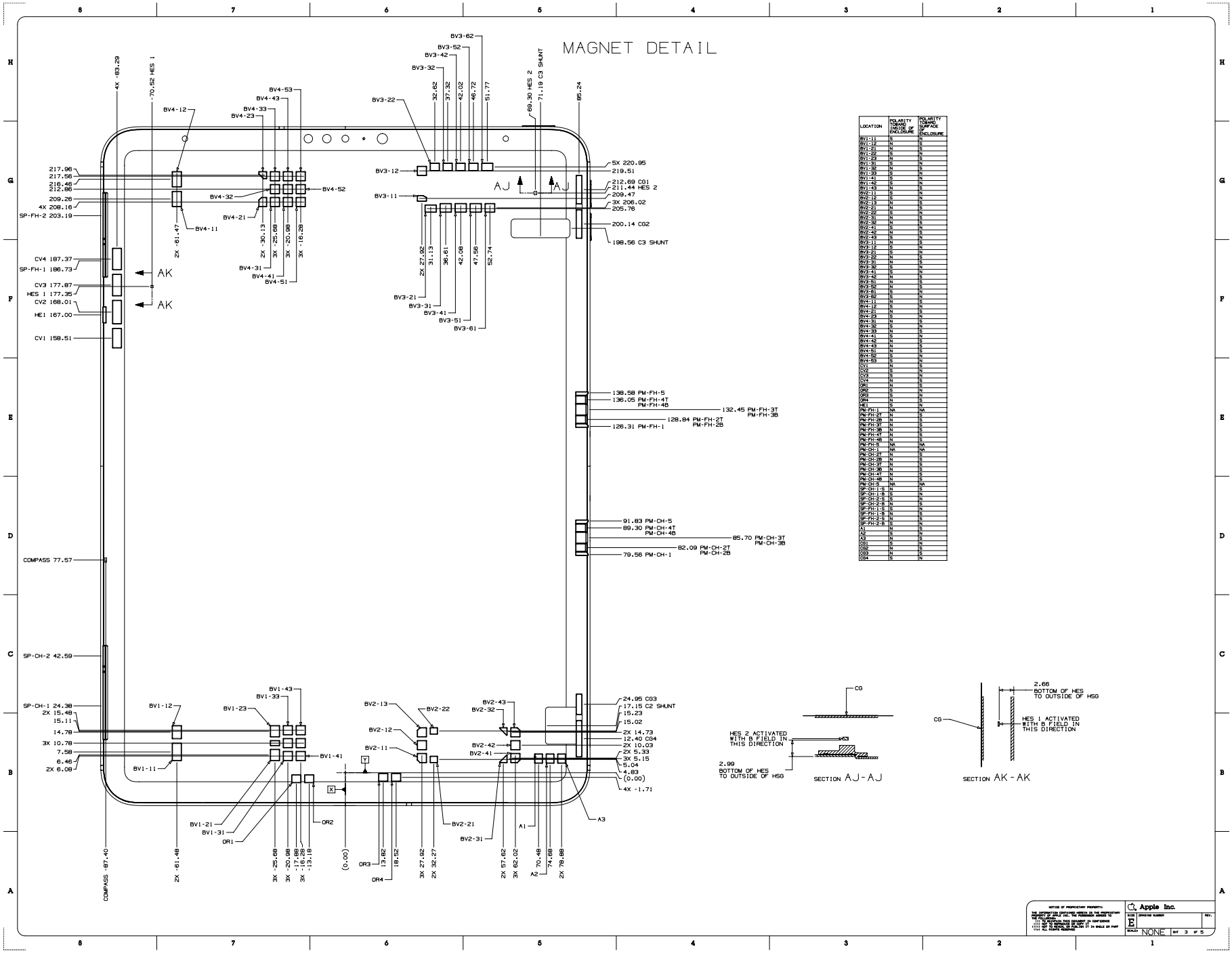

Copyright © 2022 Apple Inc. All Rights Reserved.

45.69 iPad Pro (11-inch) 2nd Generation 4 of 5

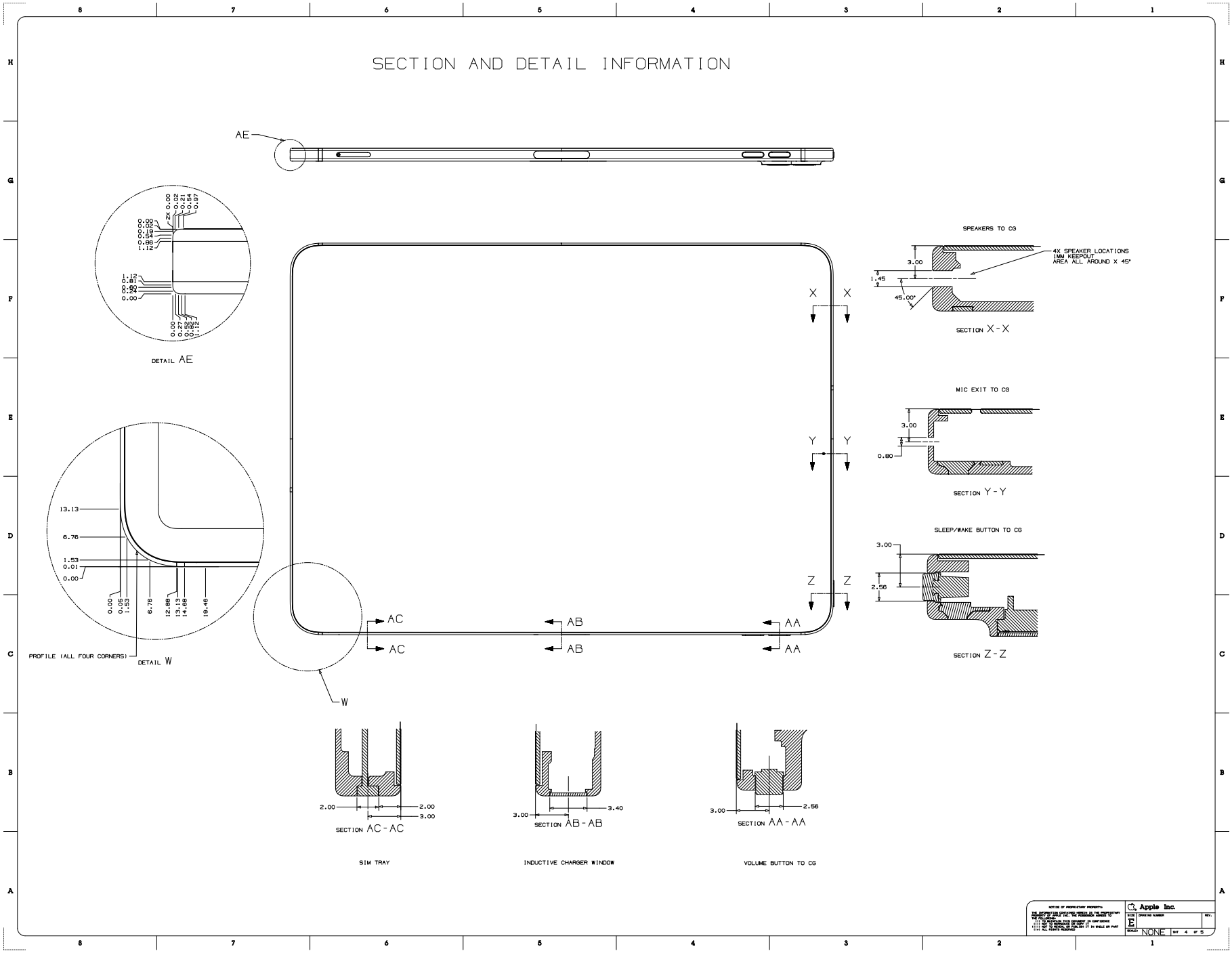

45.70 iPad Pro (11-inch) 2nd Generation 5 of 5

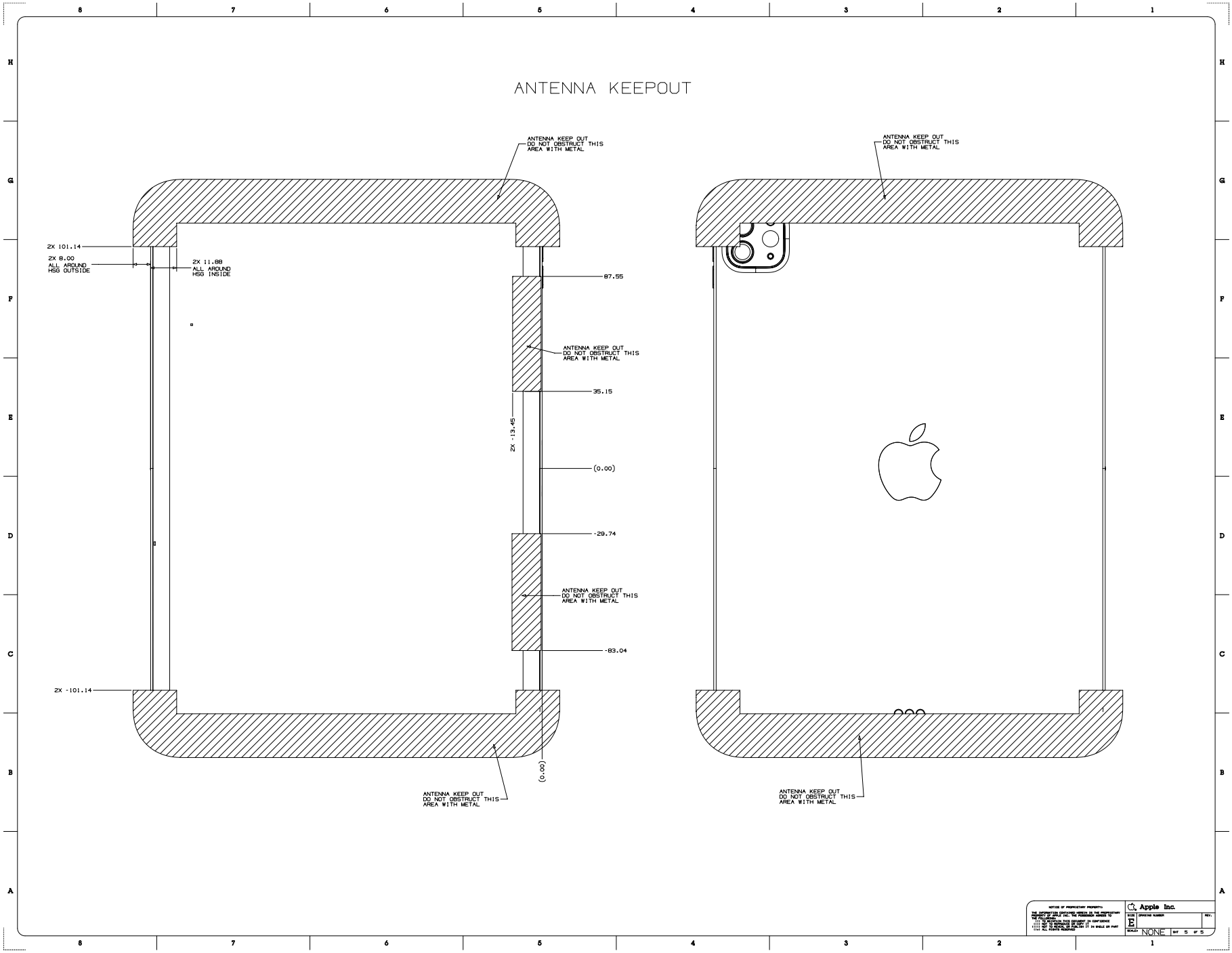

Copyright © 2022 Apple Inc. All Rights Reserved.

45.71 iPad Air (3rd generation) with Wi-Fi 1 of 3

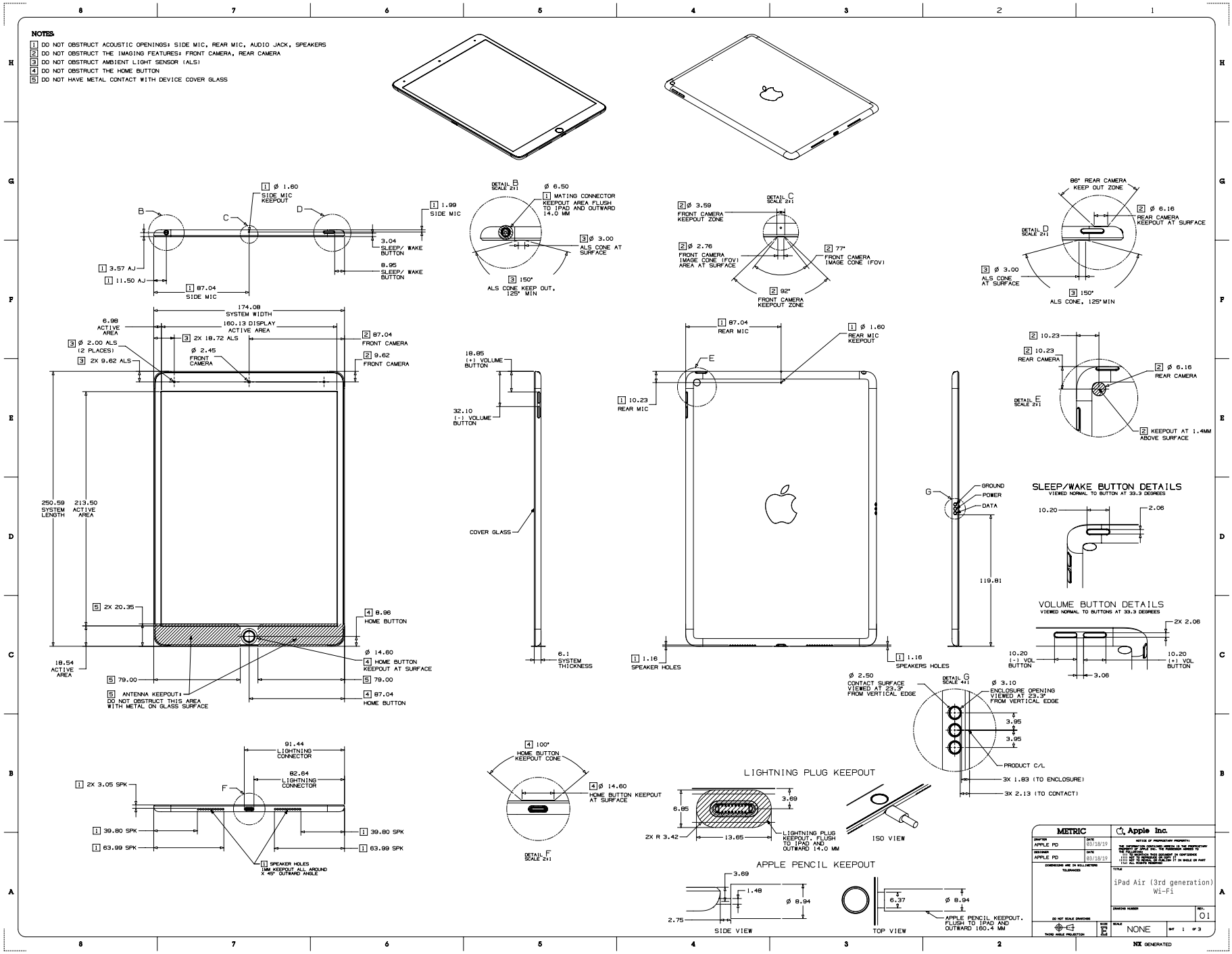

45.72 iPad Air (3rd generation) with Wi-Fi 2 of 3

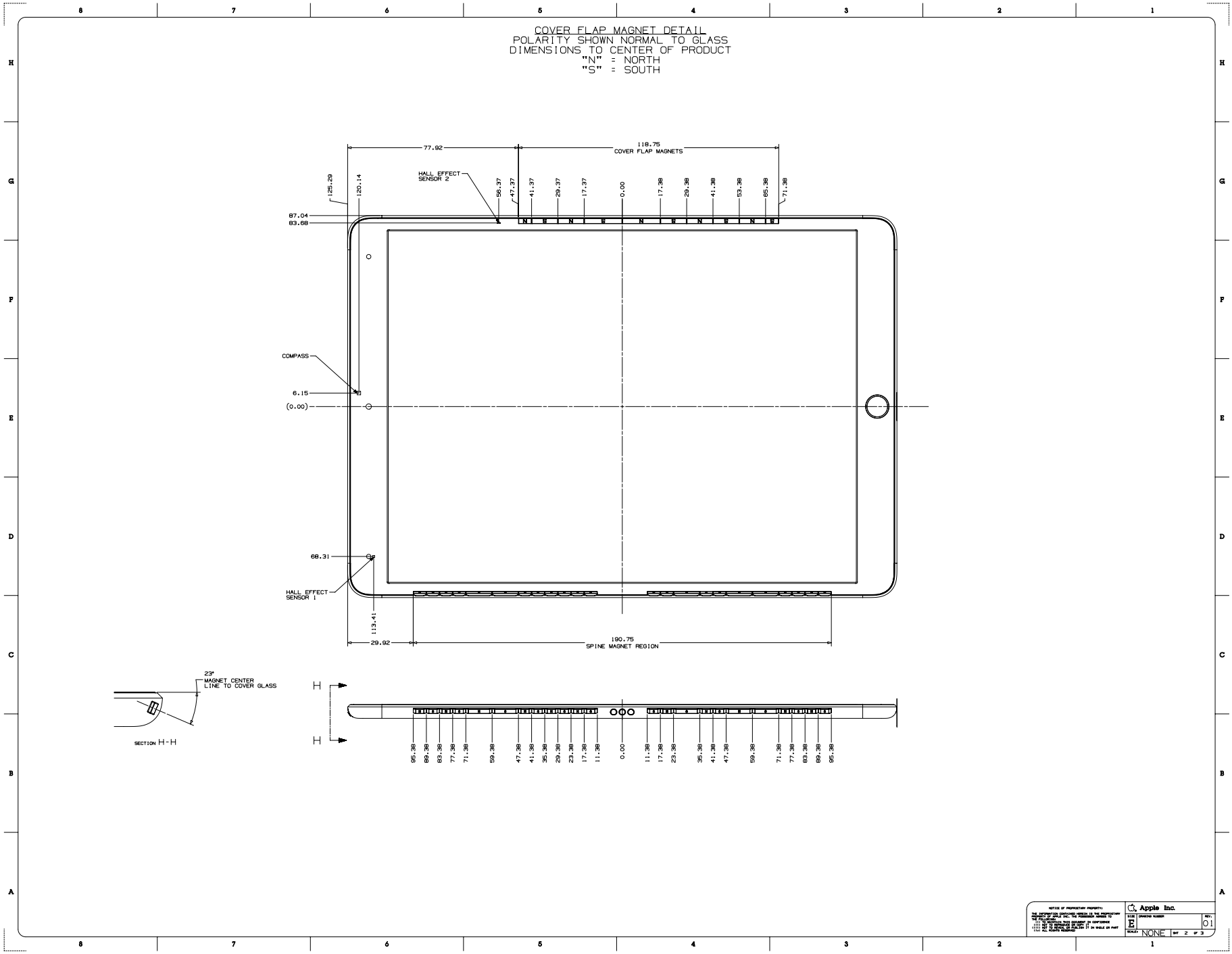

45.73 iPad Air (3rd generation) with Wi-Fi 3 of 3

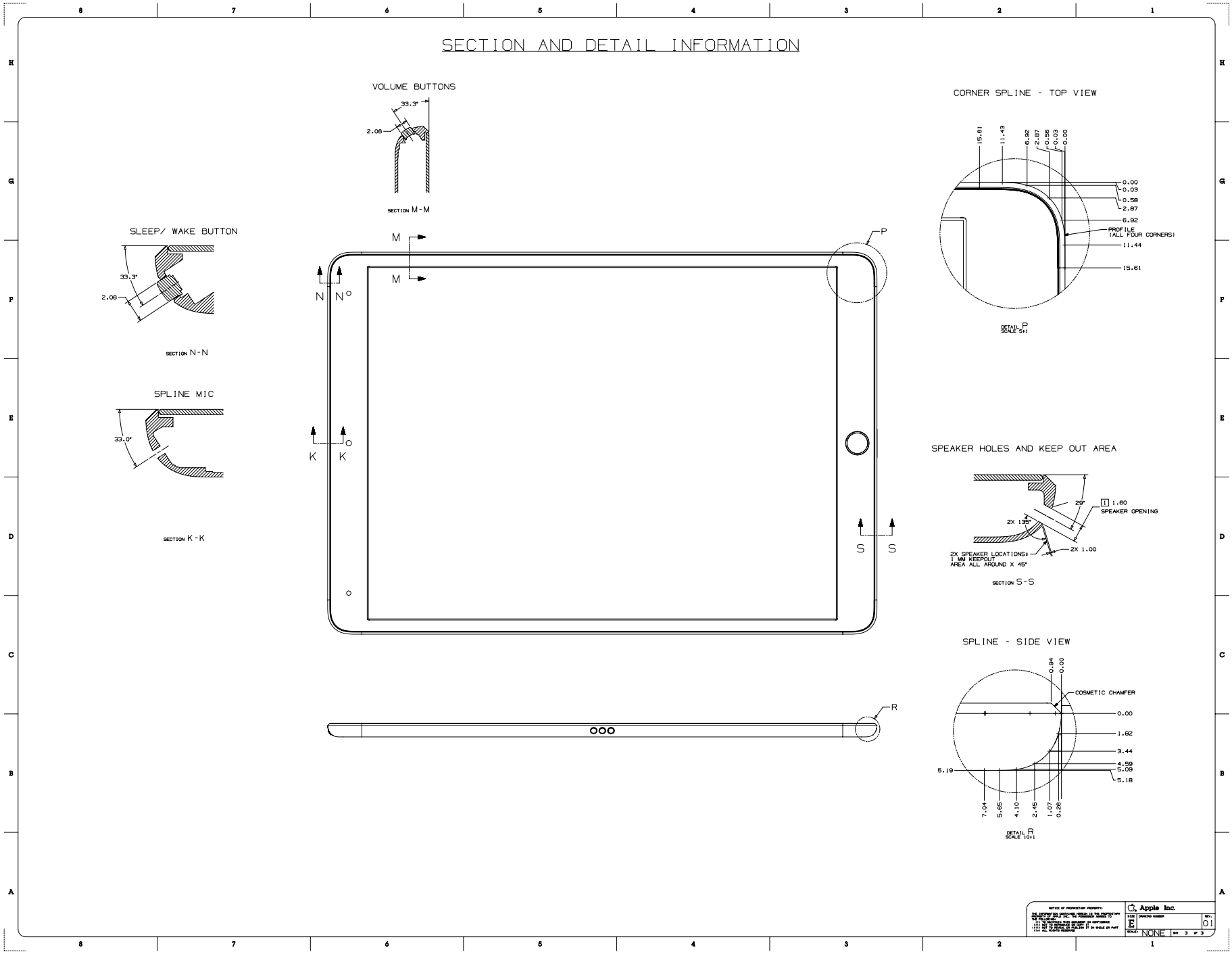

45.74 iPad Air (3rd generation) with Wi-Fi + Cellular 1 of 3

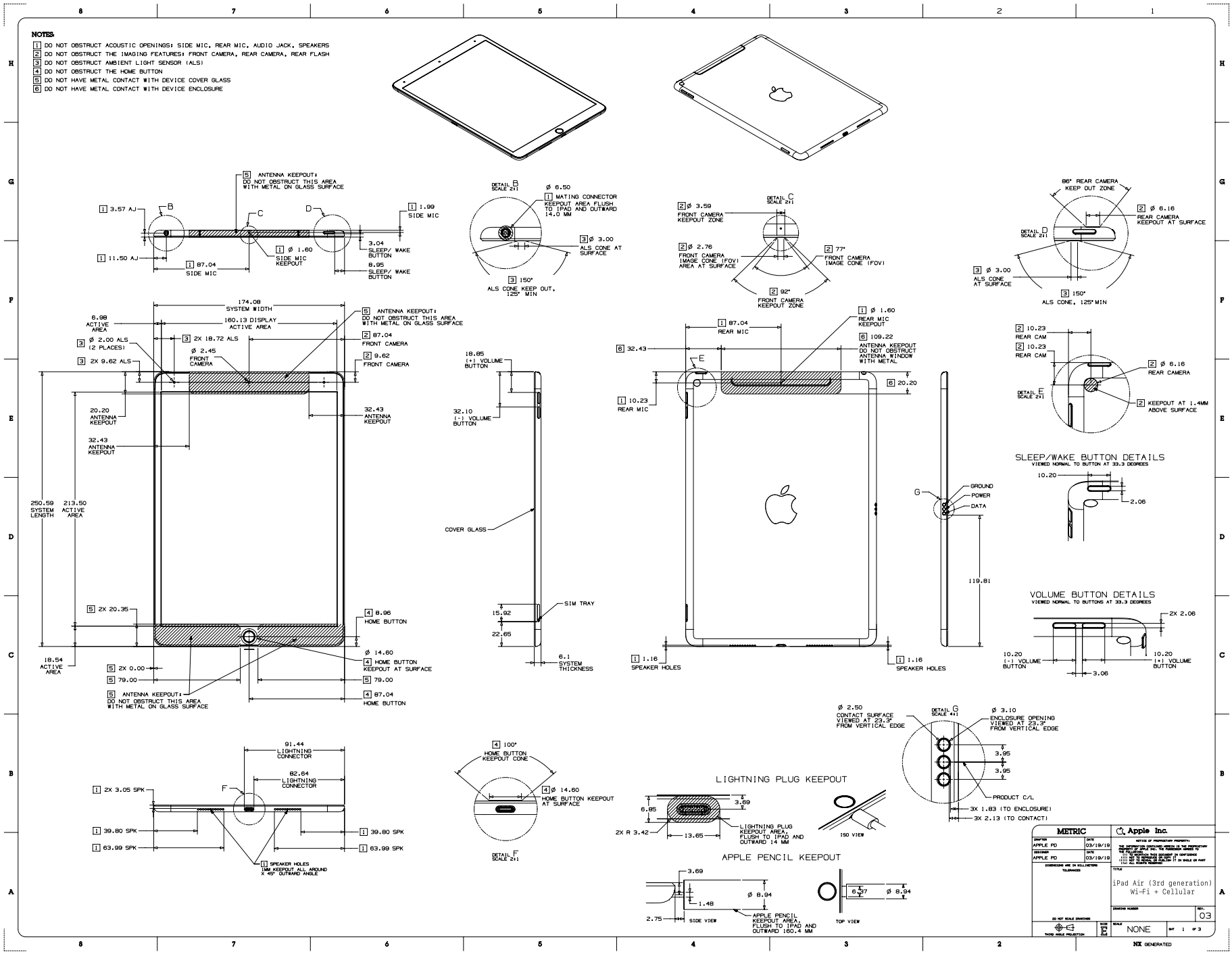

45.75 iPad Air (3rd generation) with Wi-Fi + Cellular 2 of 3

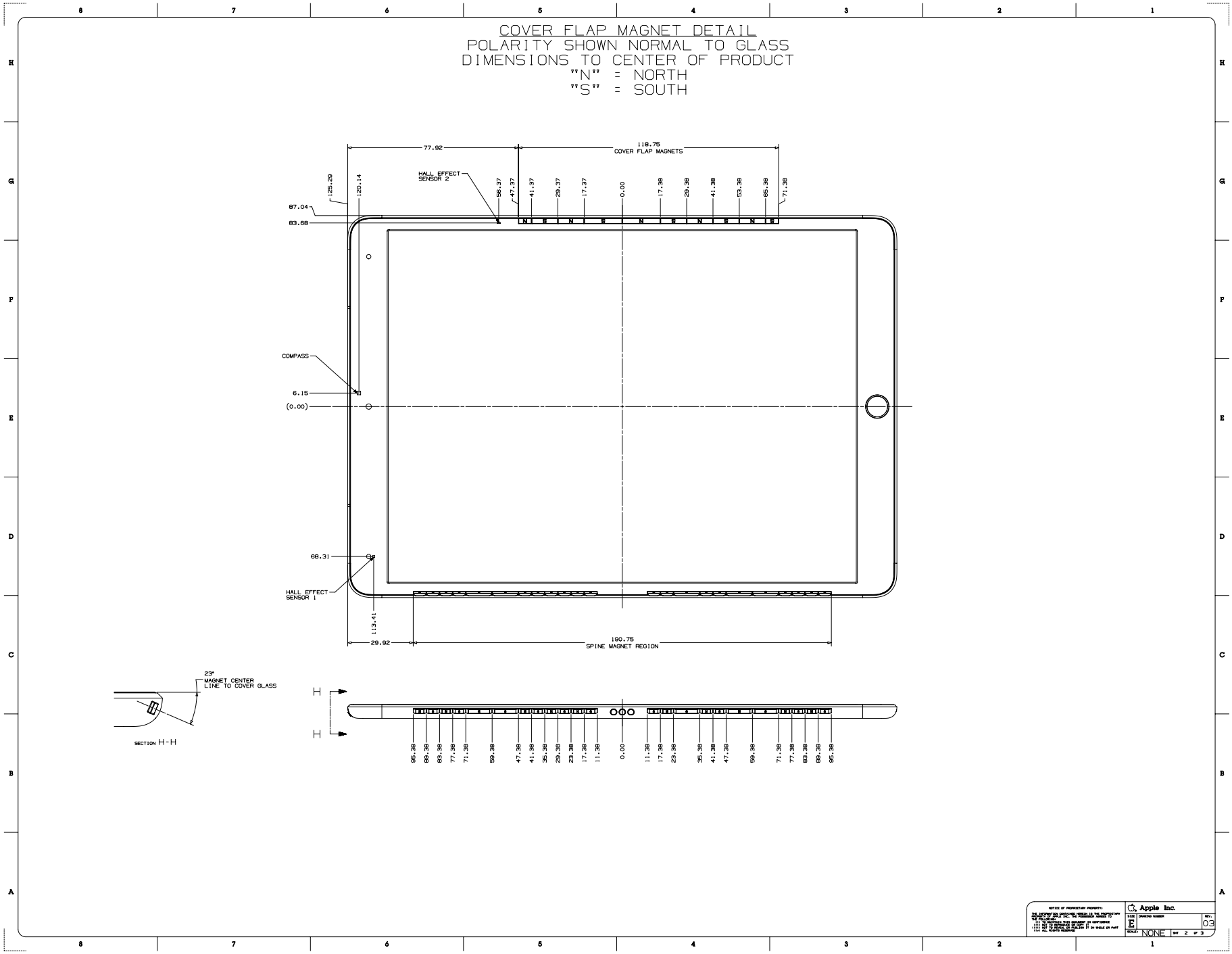

45.76 iPad Air (3rd generation) with Wi-Fi + Cellular 3 of 3

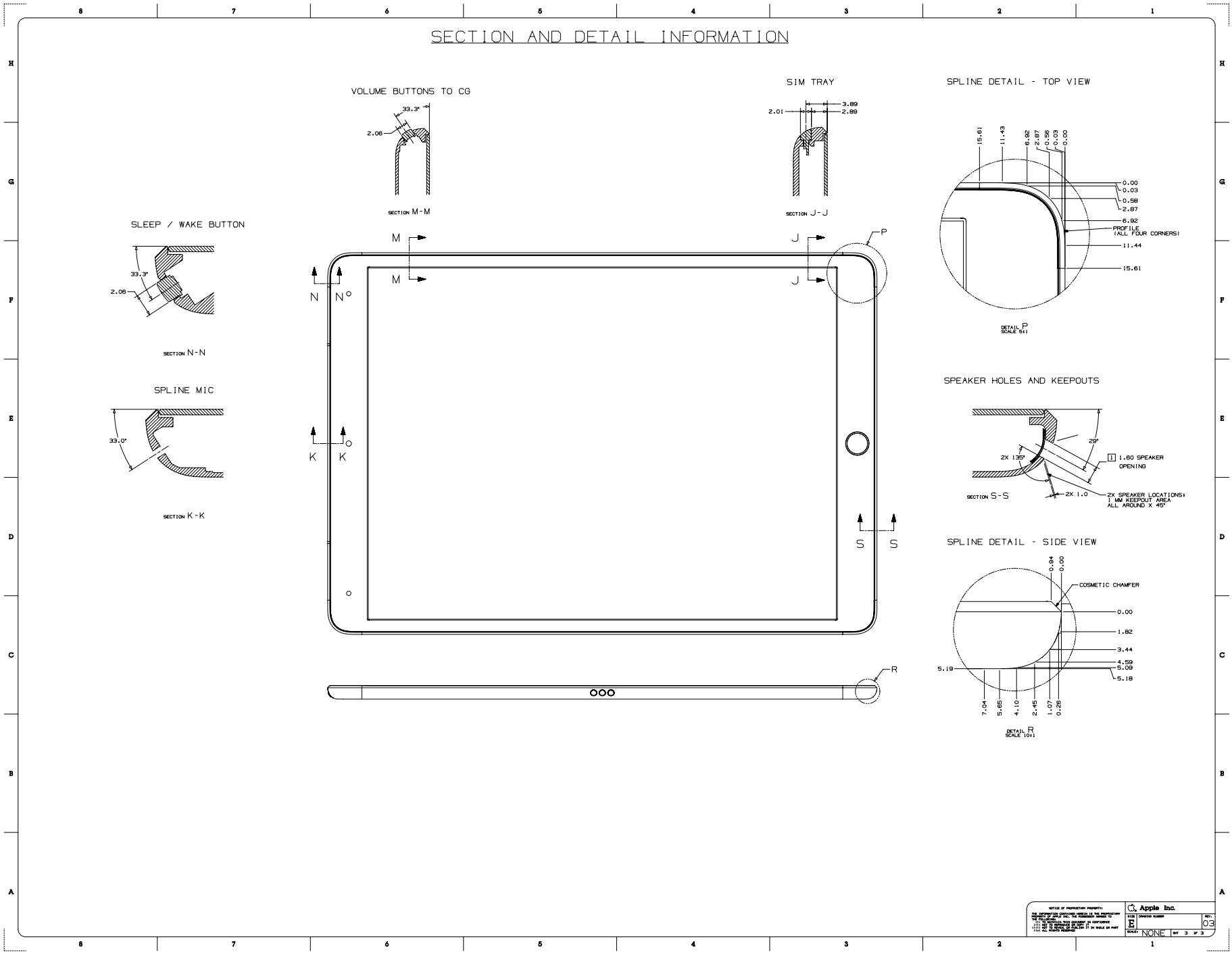

45.77 iPad mini (5th generation) with Wi-Fi 1 of 3

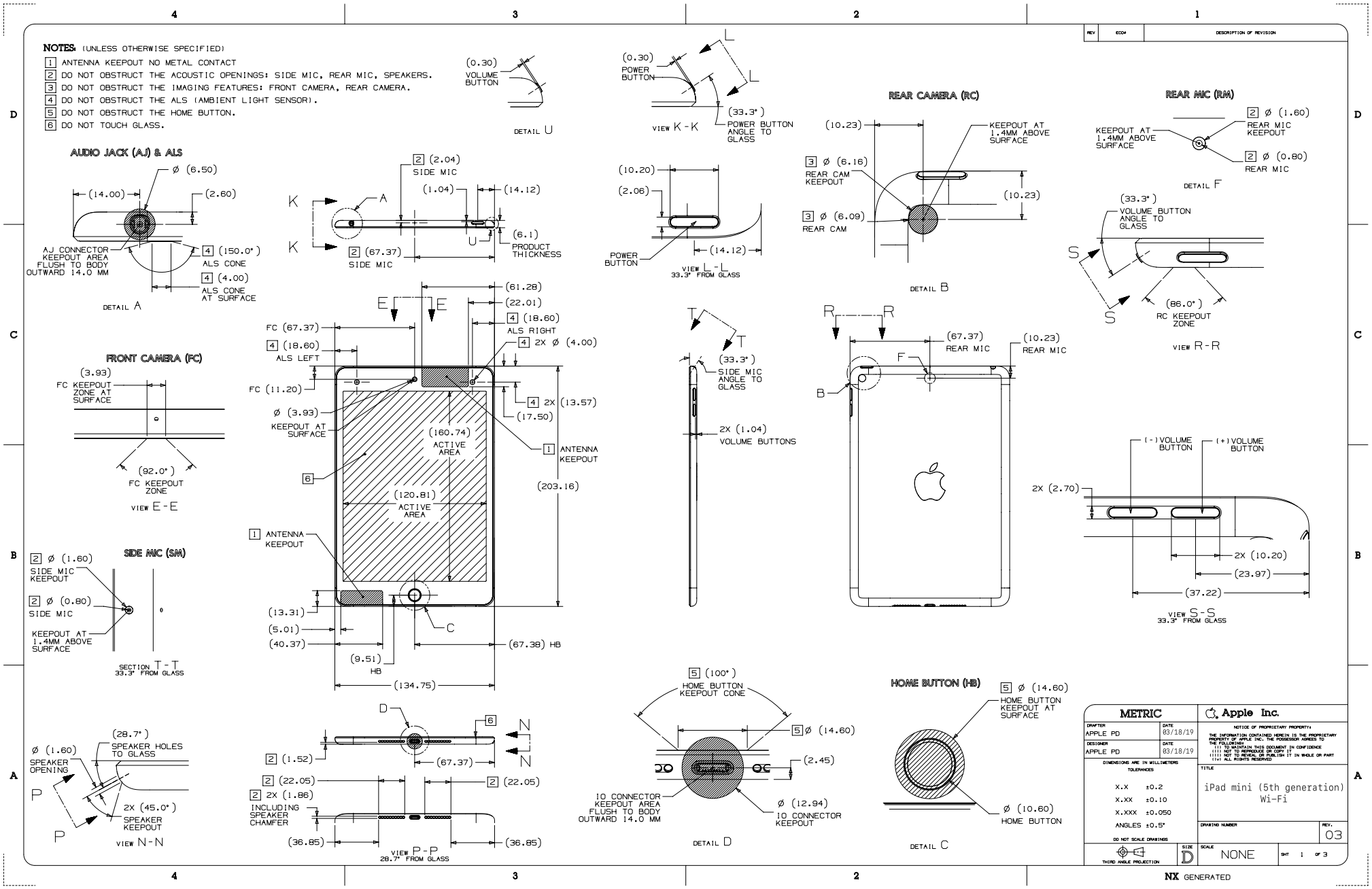

45.78 iPad mini (5th generation) with Wi-Fi 2 of 3

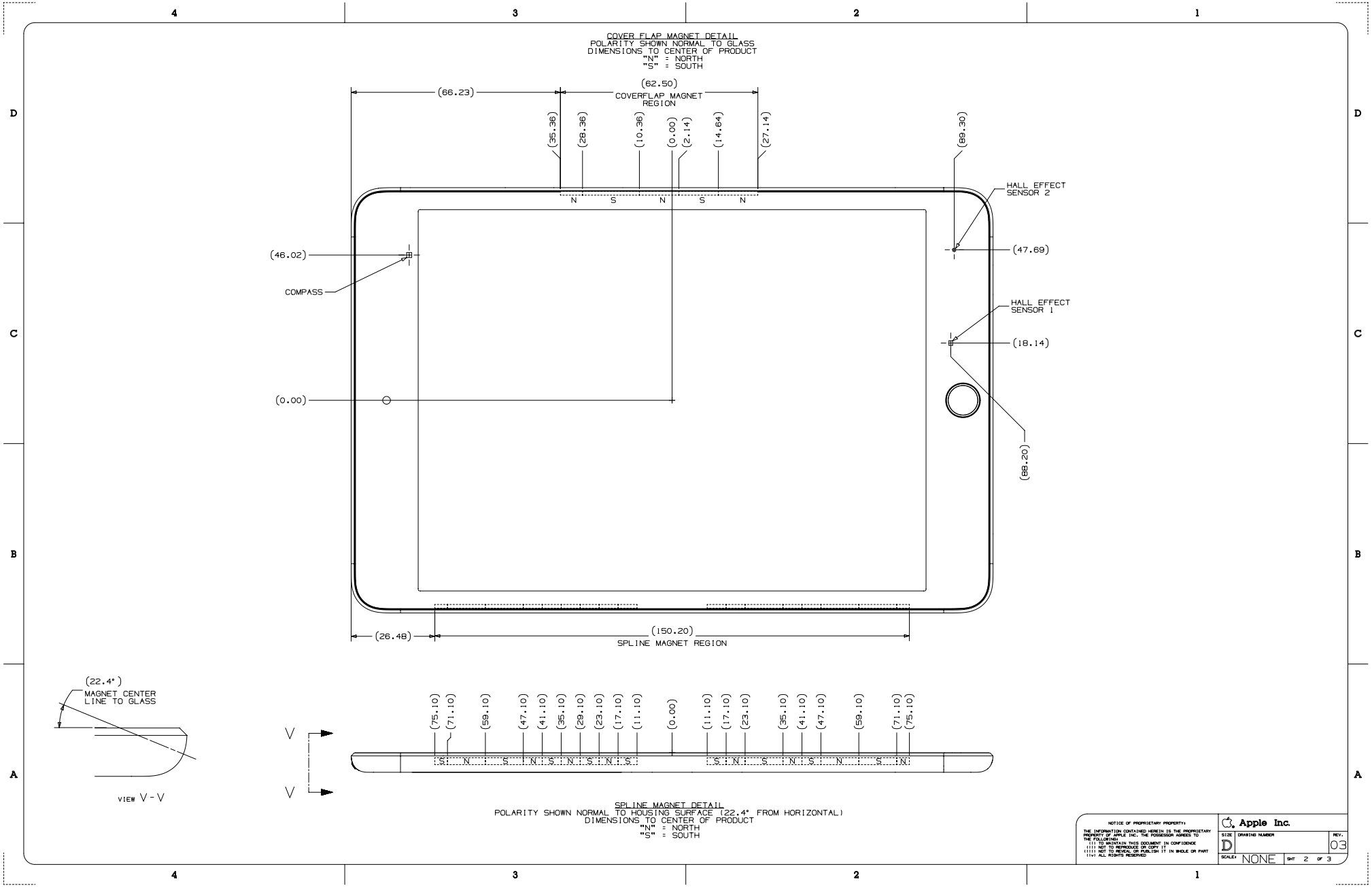

45.79 iPad mini (5th generation) with Wi-Fi 3 of 3

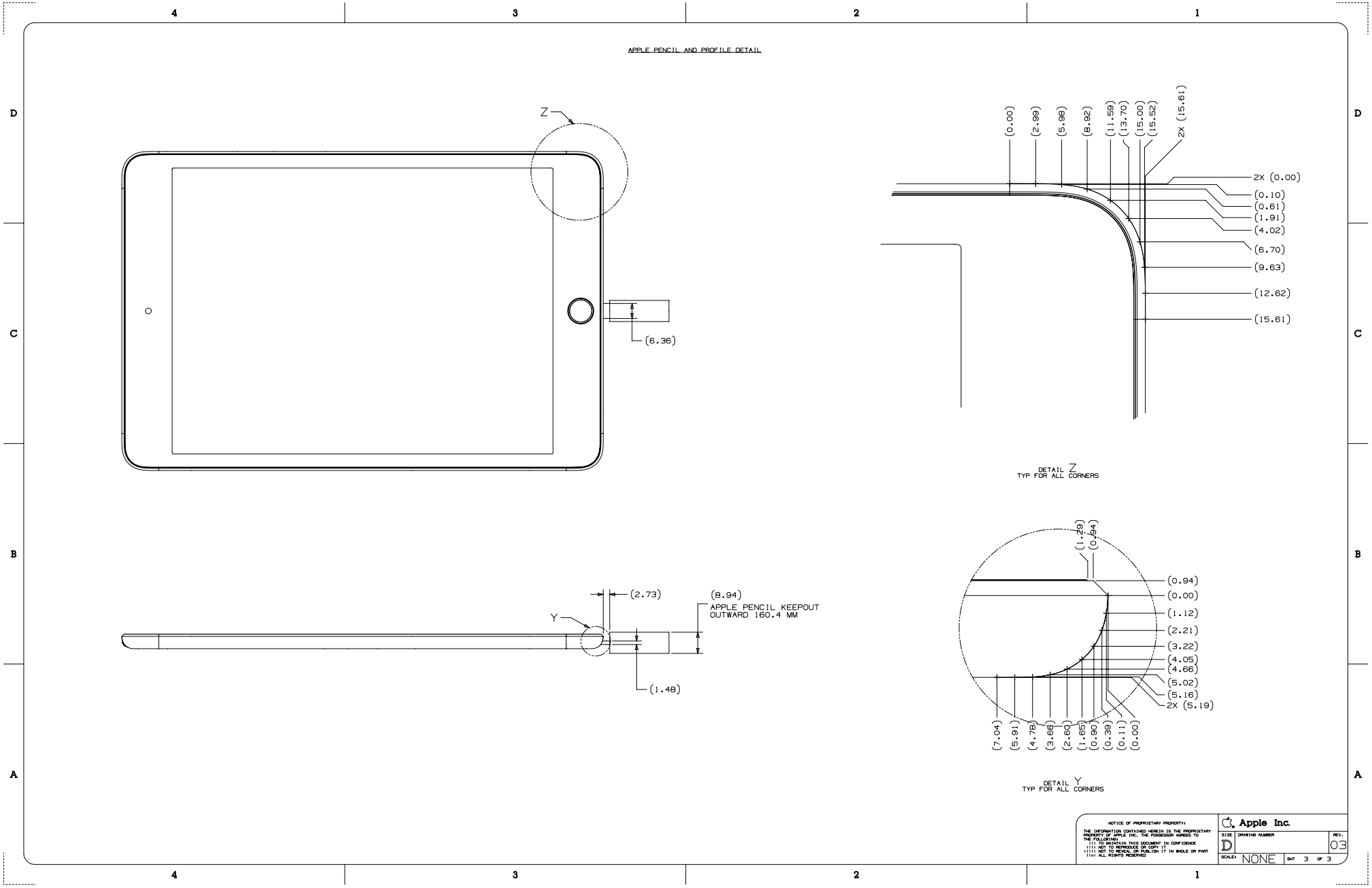

45.80 iPad mini (5th generation) with Wi-Fi + Cellular 1 of 3

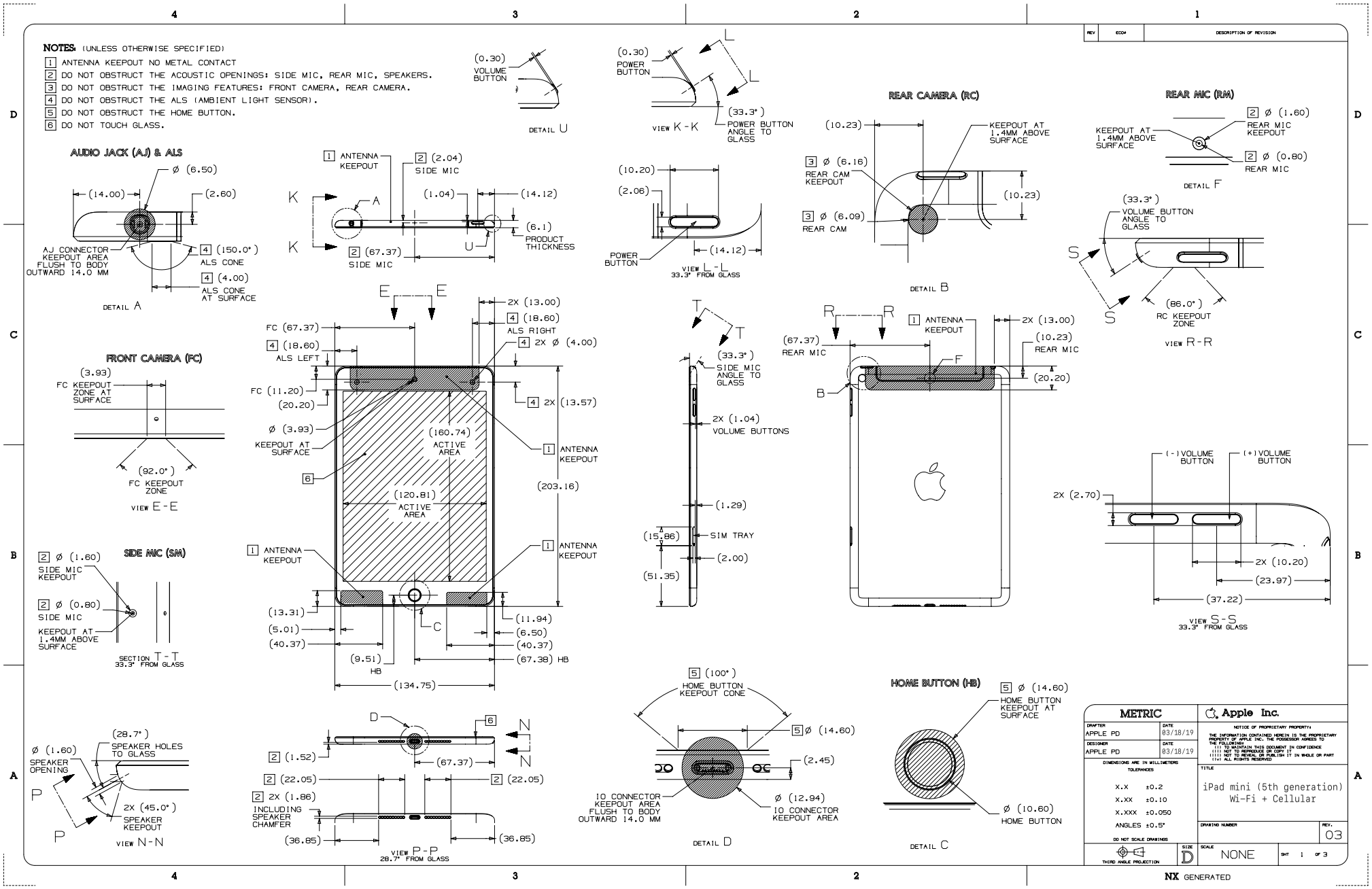

45.81 iPad mini (5th generation) with Wi-Fi + Cellular 2 of 3

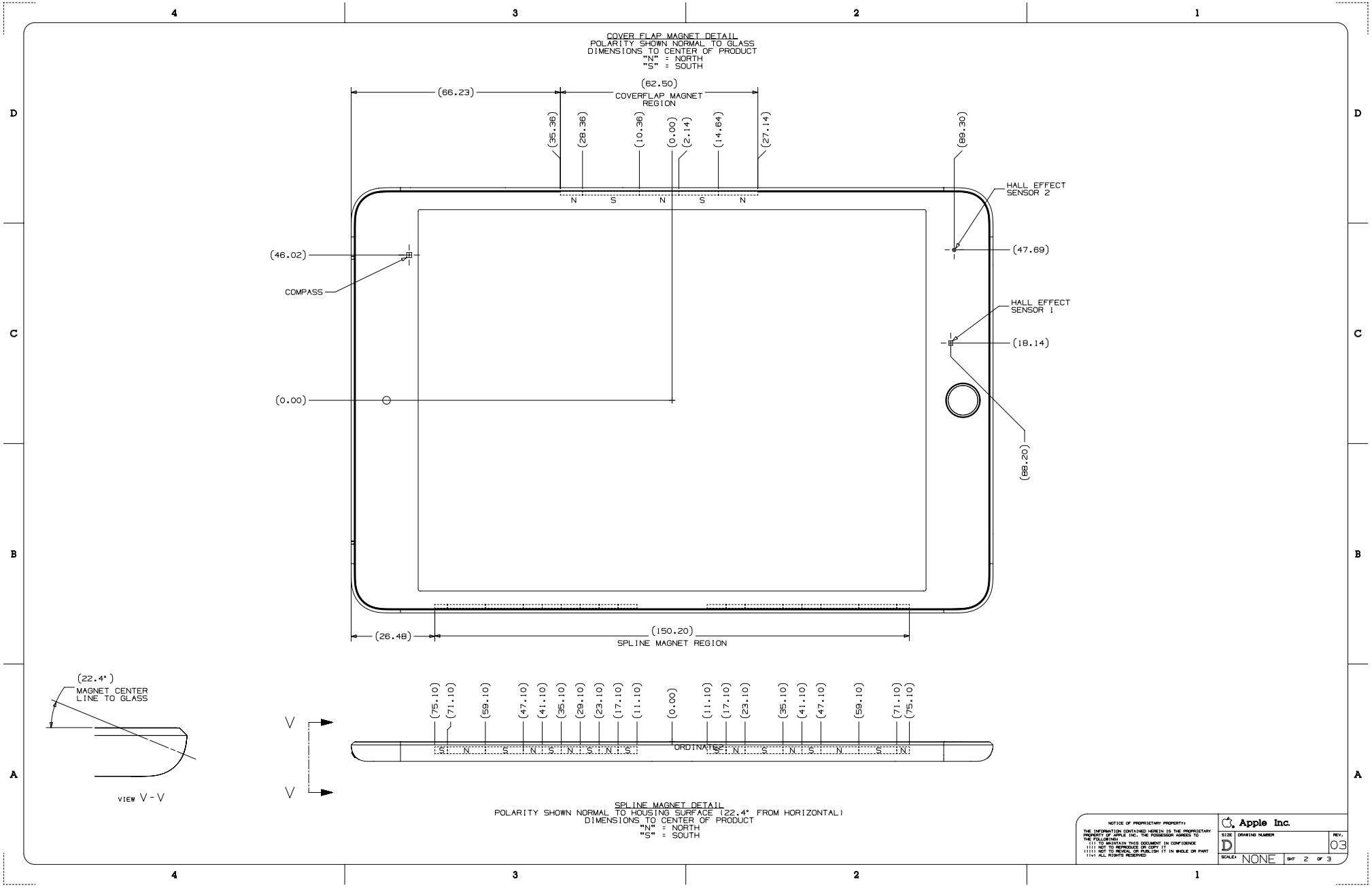

45.82 iPad mini (5th generation) with Wi-Fi + Cellular 3 of 3

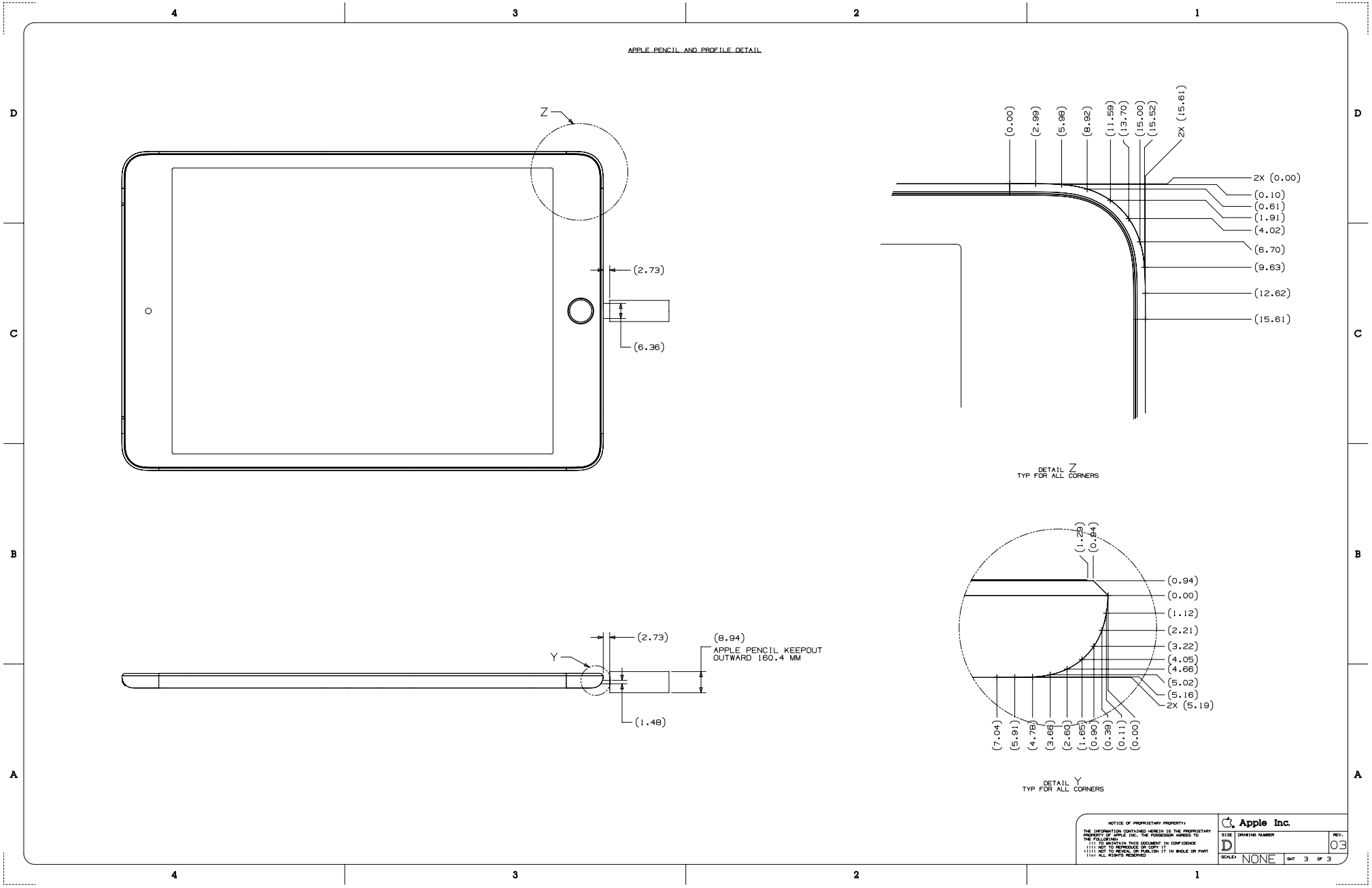

45.83 iPad Pro (12.9-inch) 3rd Generation 1 of 3

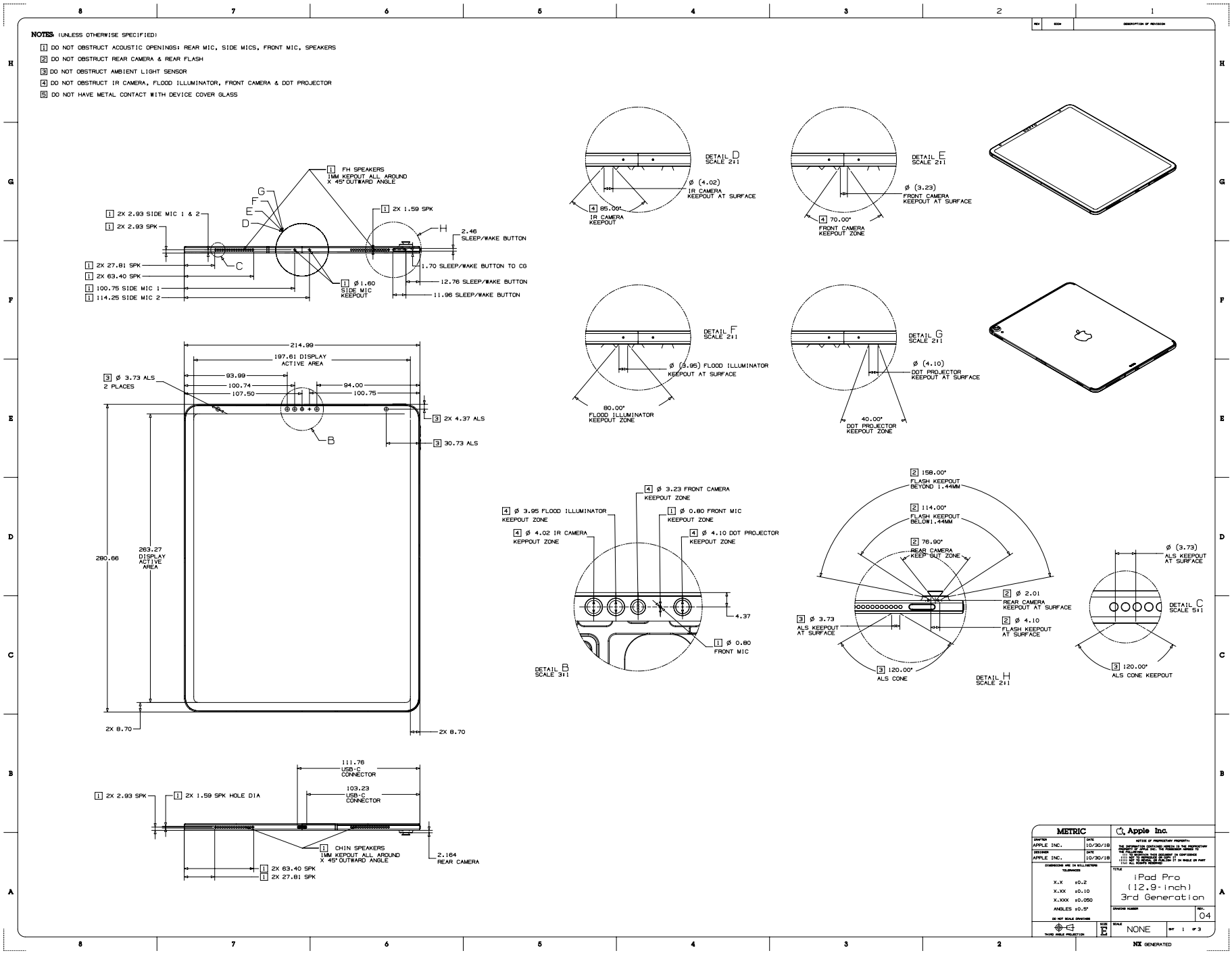

45.84 iPad Pro (12.9-inch) 3rd Generation 2 of 3

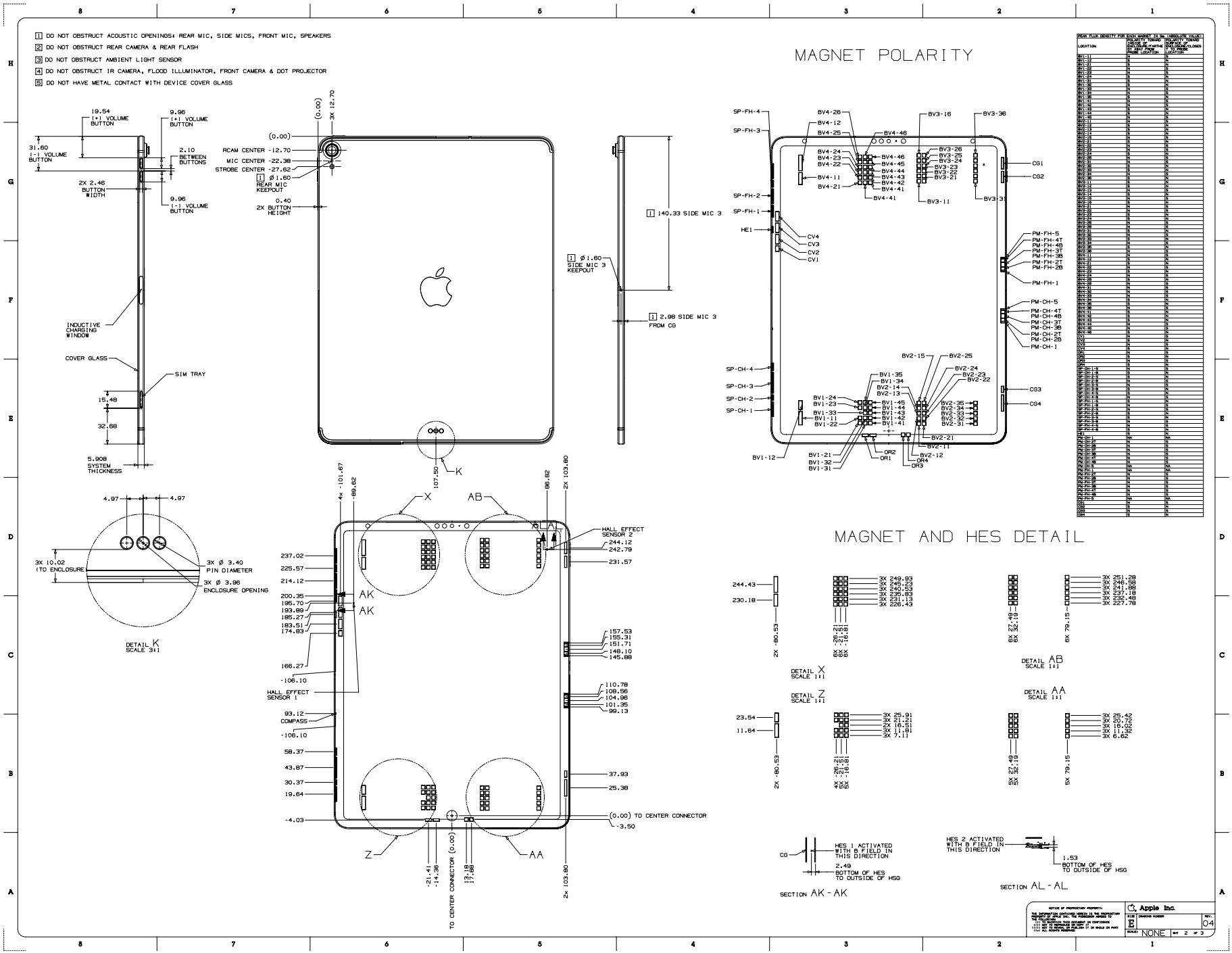

45.85 iPad Pro (12.9-inch) 3rd Generation 3 of 3

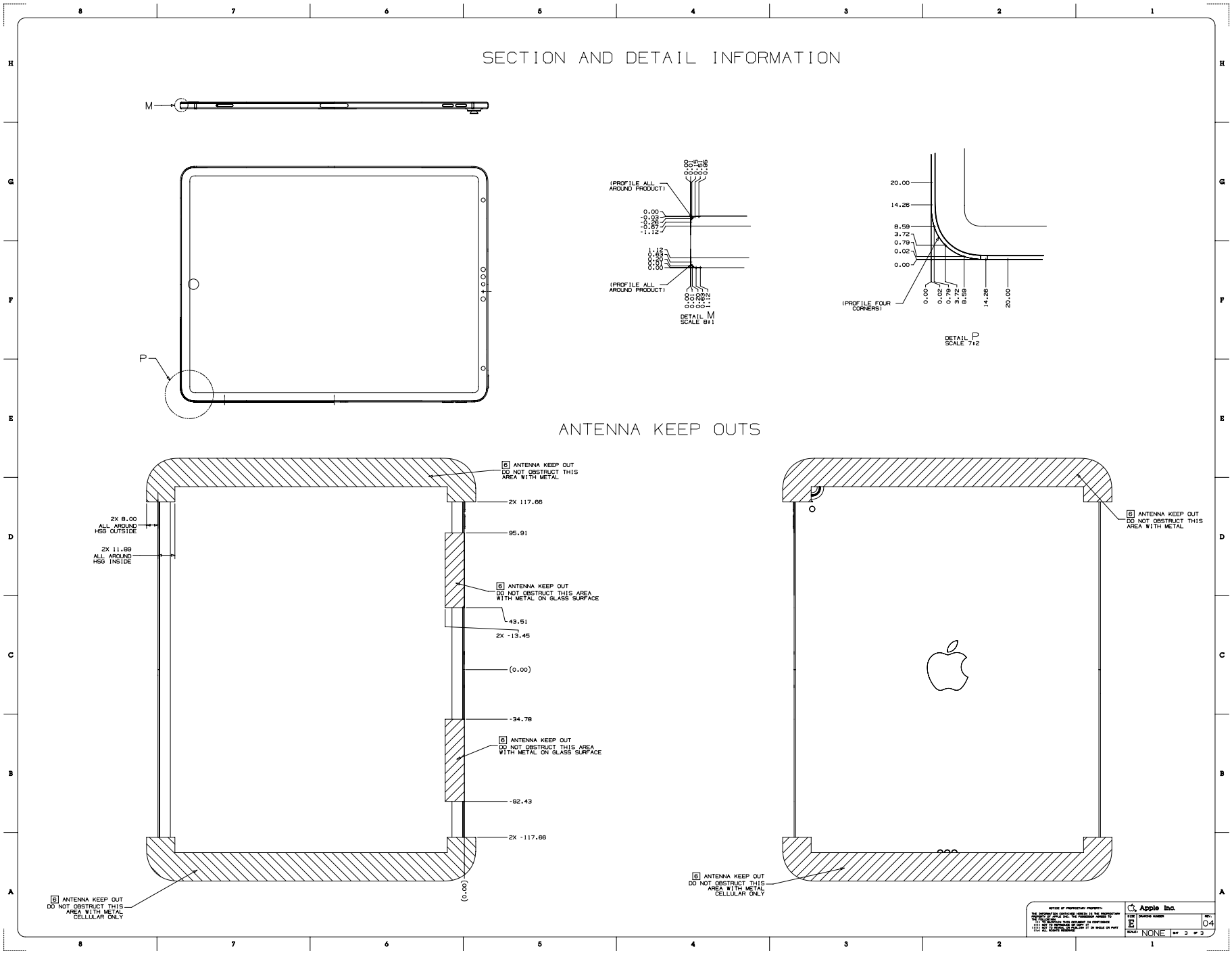

45.86 iPad Pro (11-inch) 1 of 3

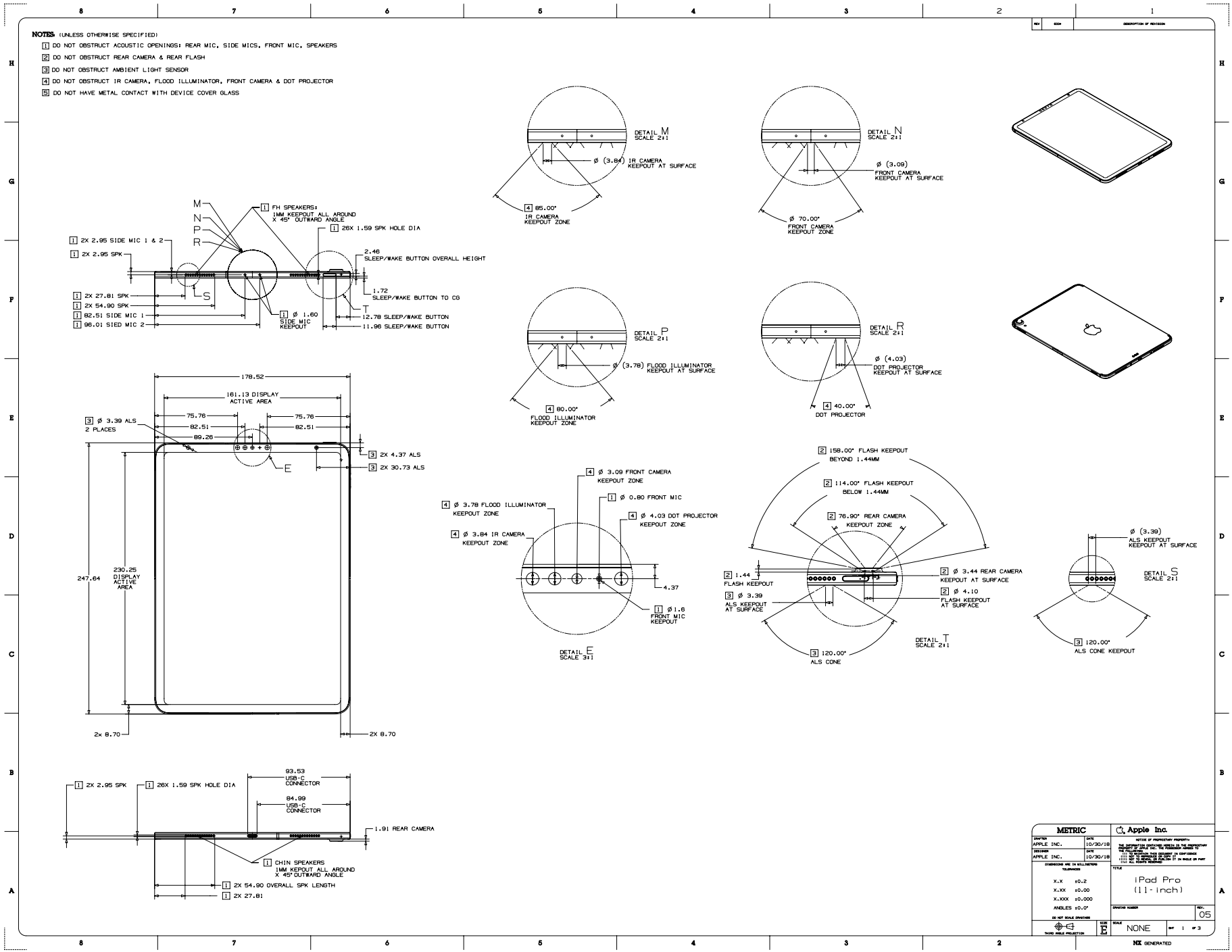

45.87 iPad Pro (11-inch) 2 of 3

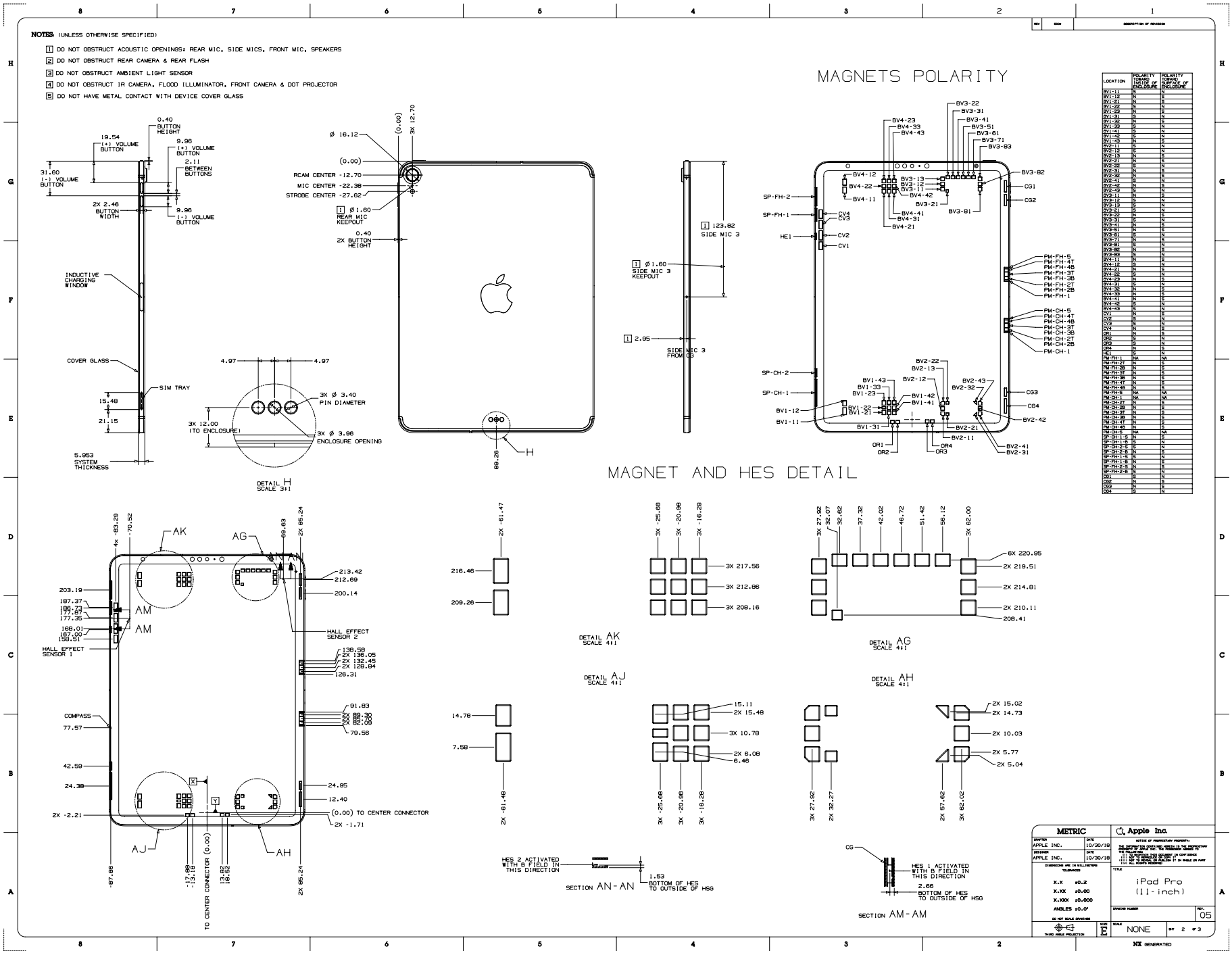

45.88 iPad Pro (11-inch) 3 of 3

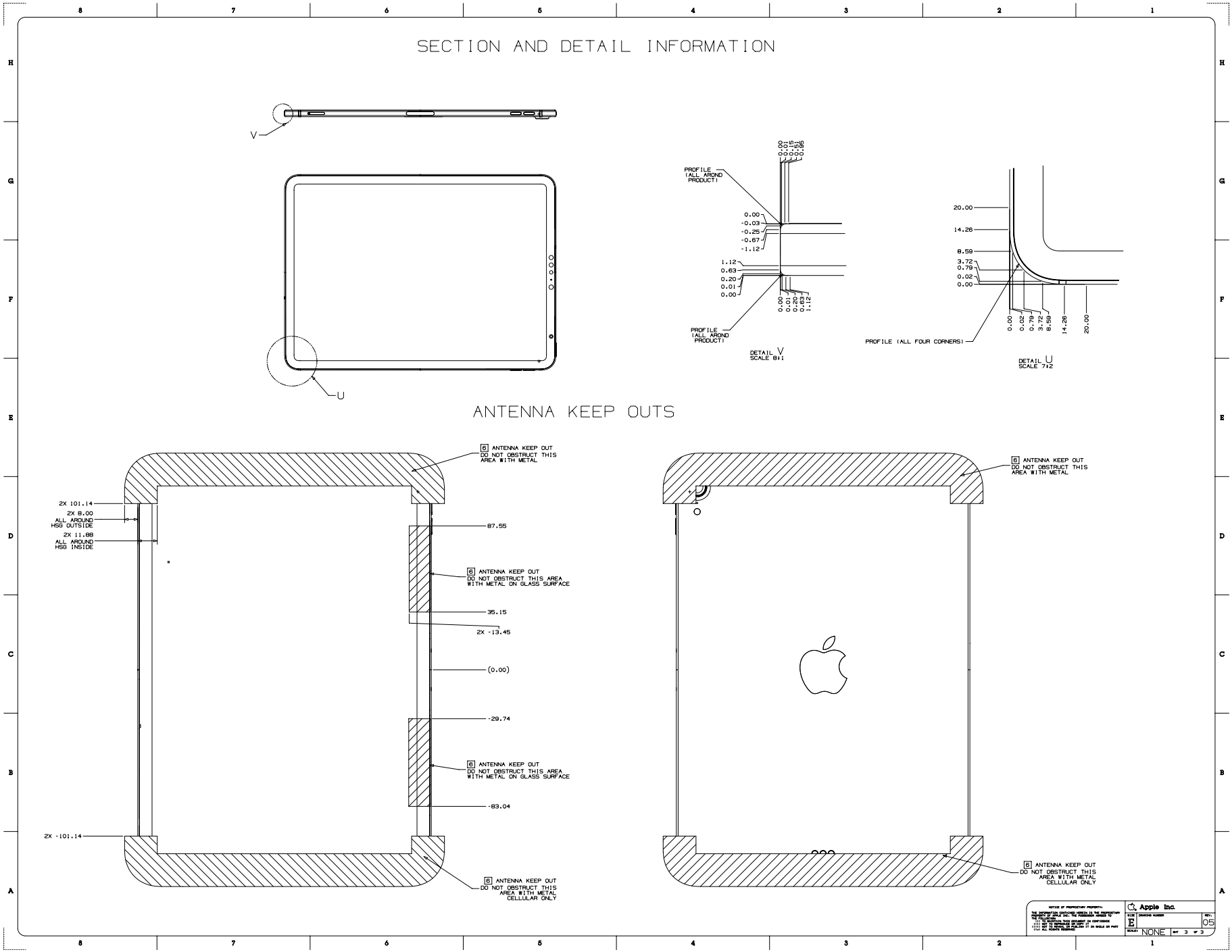

45.89 iPad Pro (12.9-inch) 2nd Generation with Wi-Fi

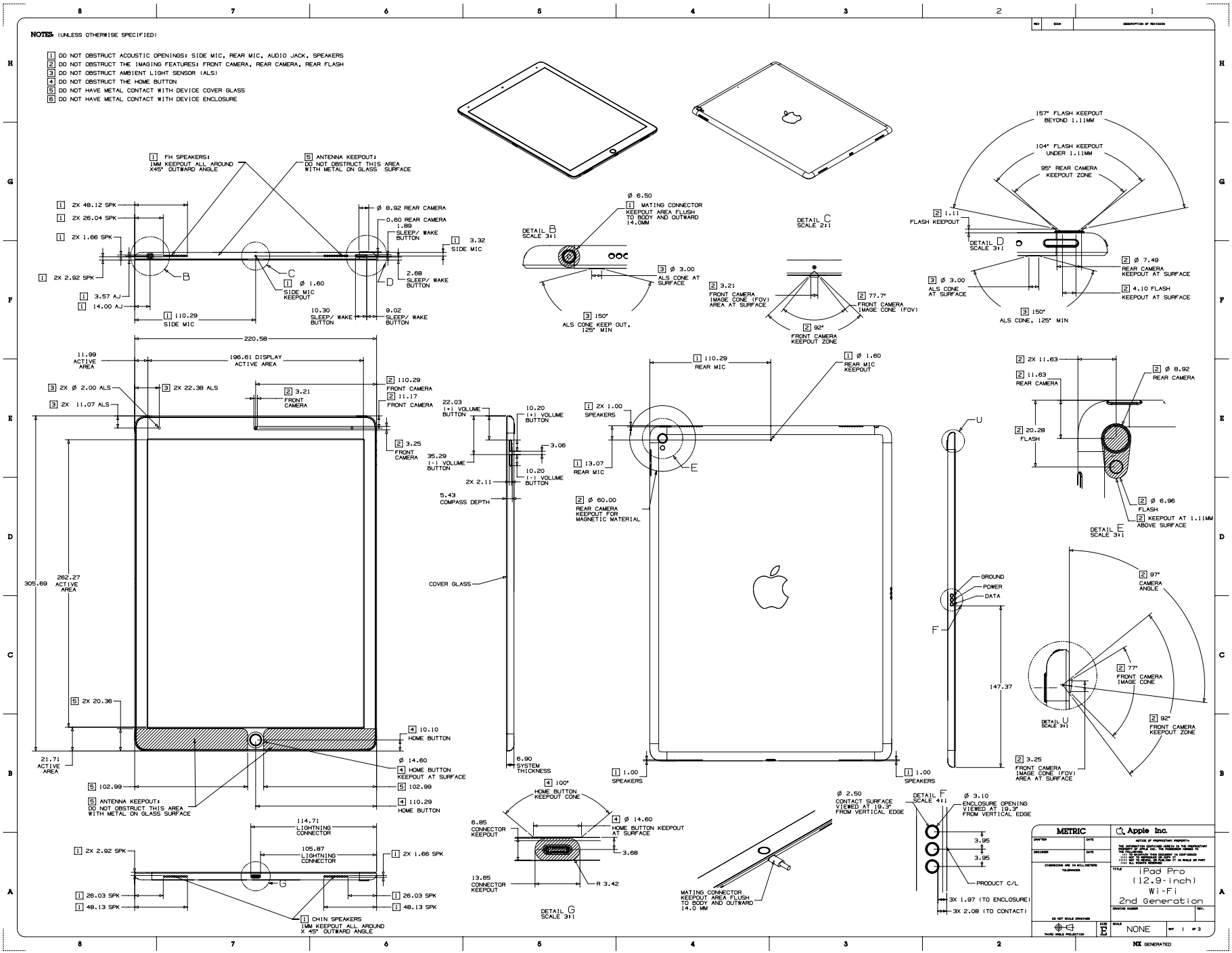

Copyright © 2022 Apple Inc. All Rights Reserved.

45.90 iPad Pro (12.9-inch) 2nd Generation with Wi-Fi + Cellular

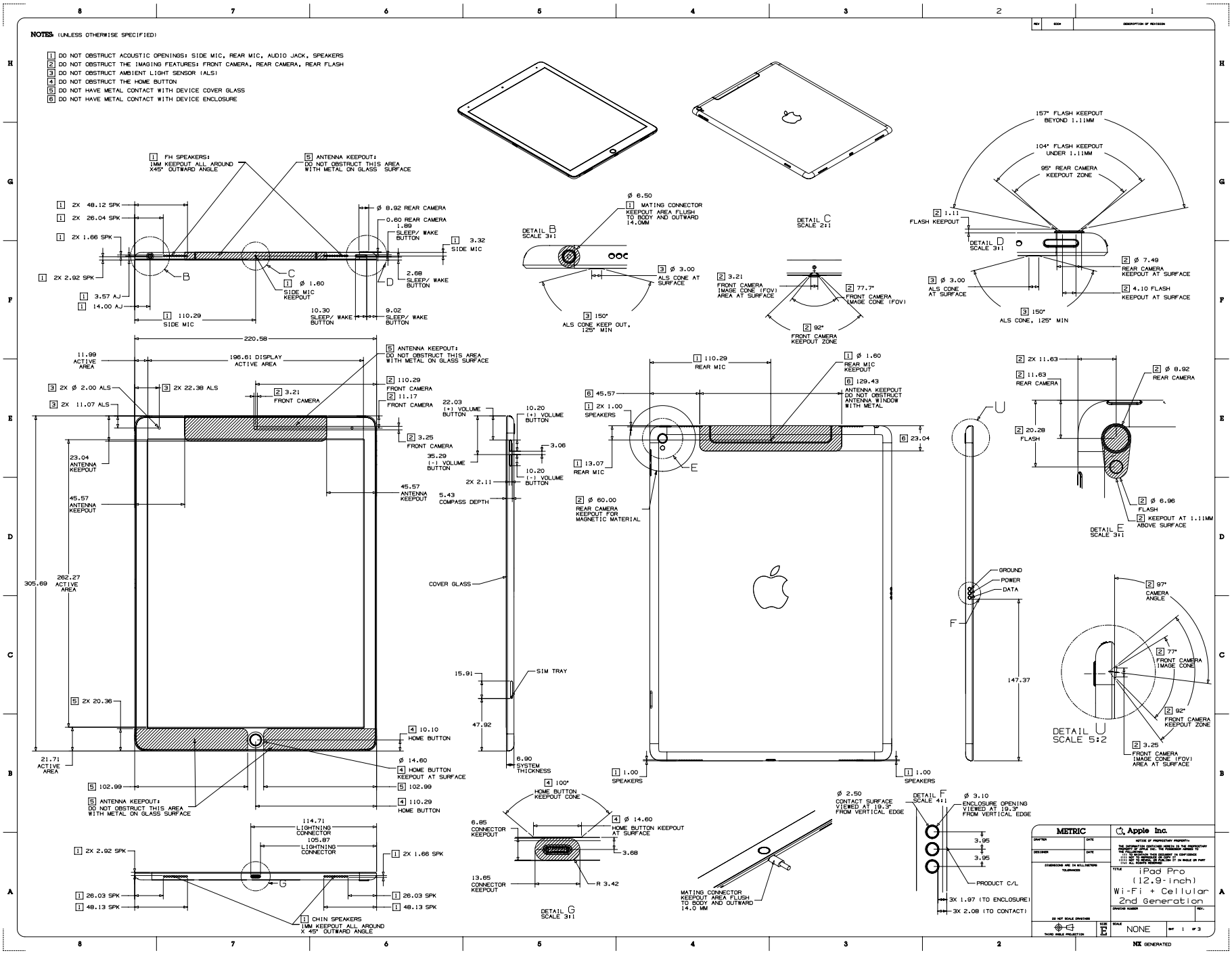

Copyright © 2022 Apple Inc. All Rights Reserved.

45.91 iPad Pro (12.9-inch) 2nd Generation Magnet/Hall Effect Sensors 1 of 2

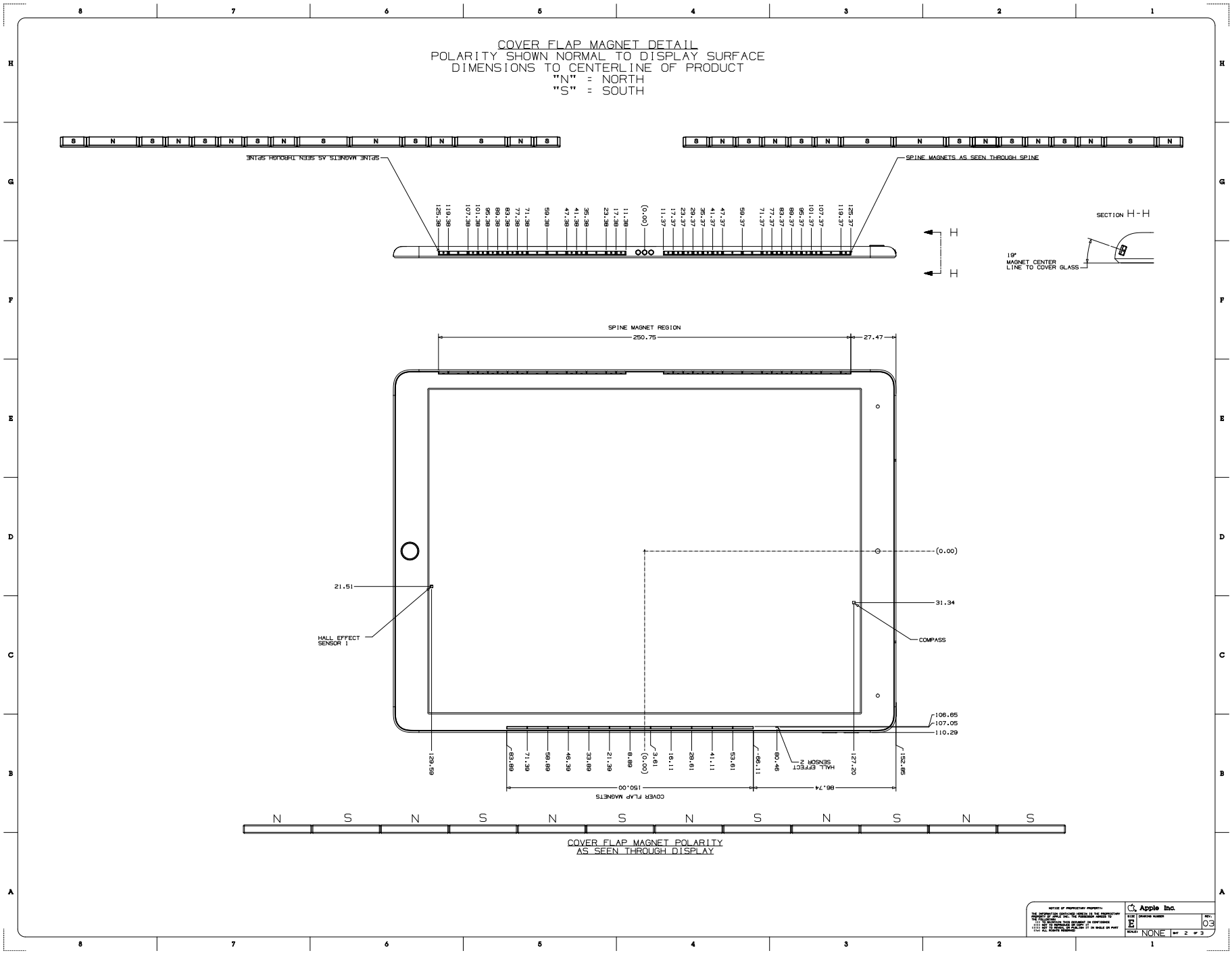

45.92 iPad Pro (12.9-inch) 2nd Generation Magnet/Hall Effect Sensors 2 of 2

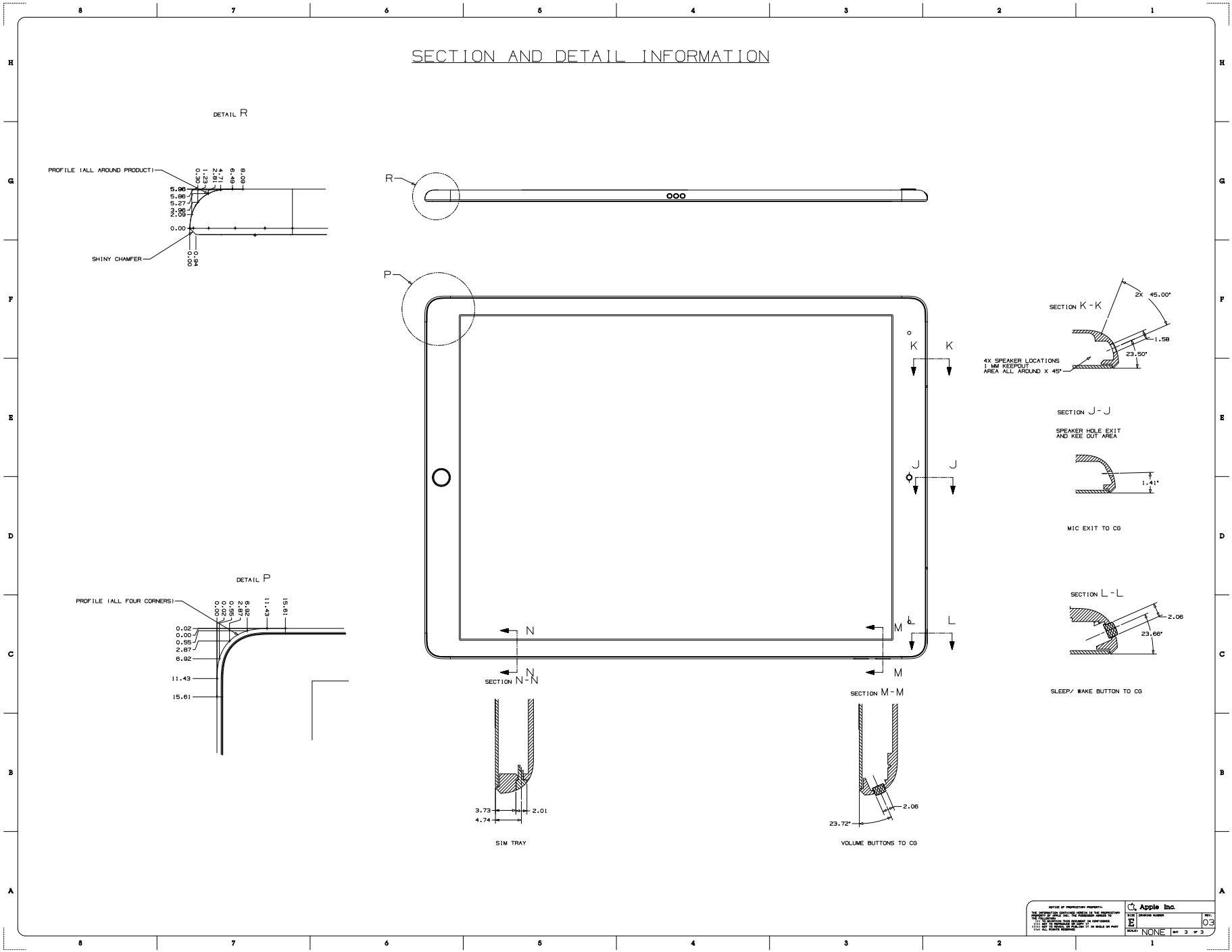

45.93 iPad Pro (10.5-inch) with Wi-Fi

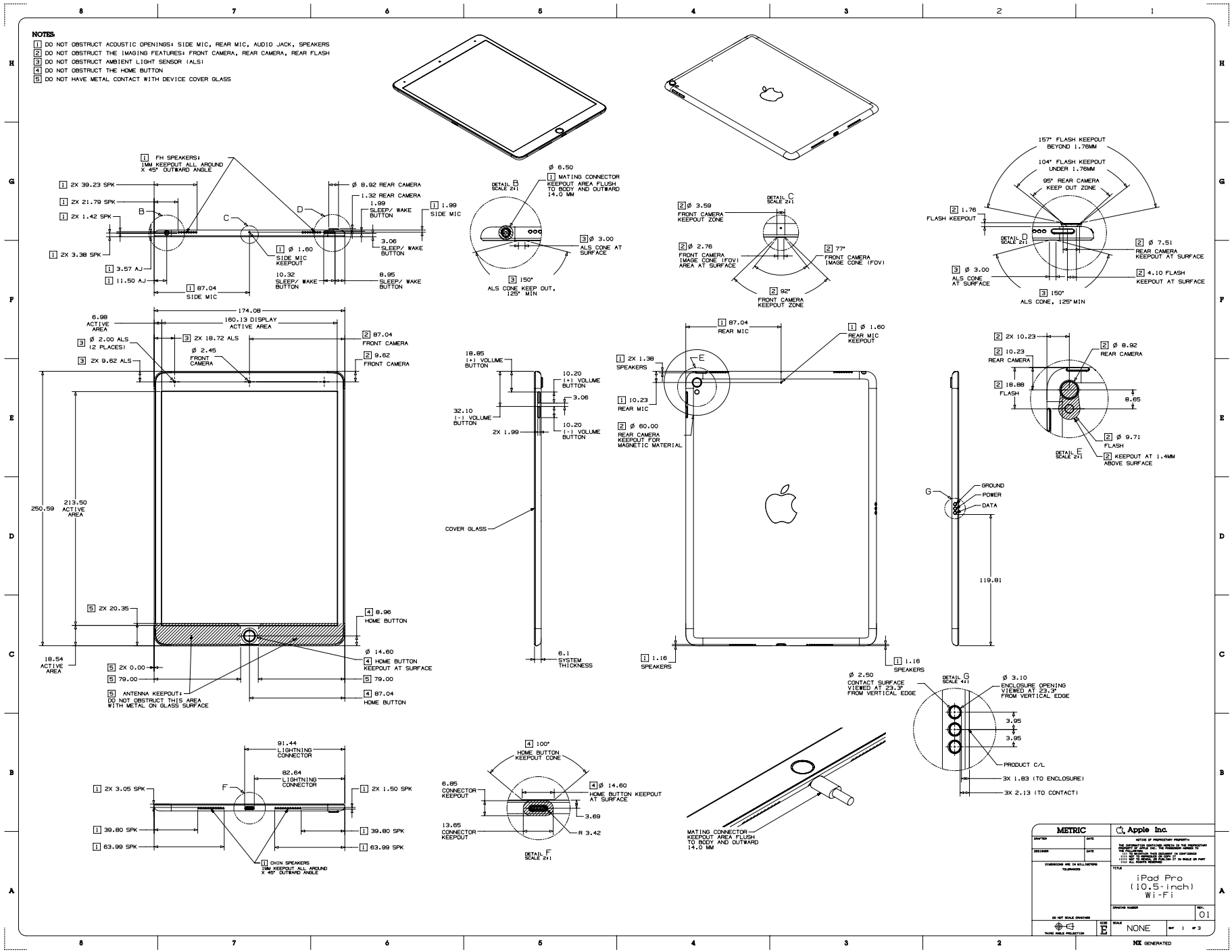

Copyright © 2022 Apple Inc. All Rights Reserved.

45.94 iPad Pro (10.5-inch) with Wi-Fi + Cellular

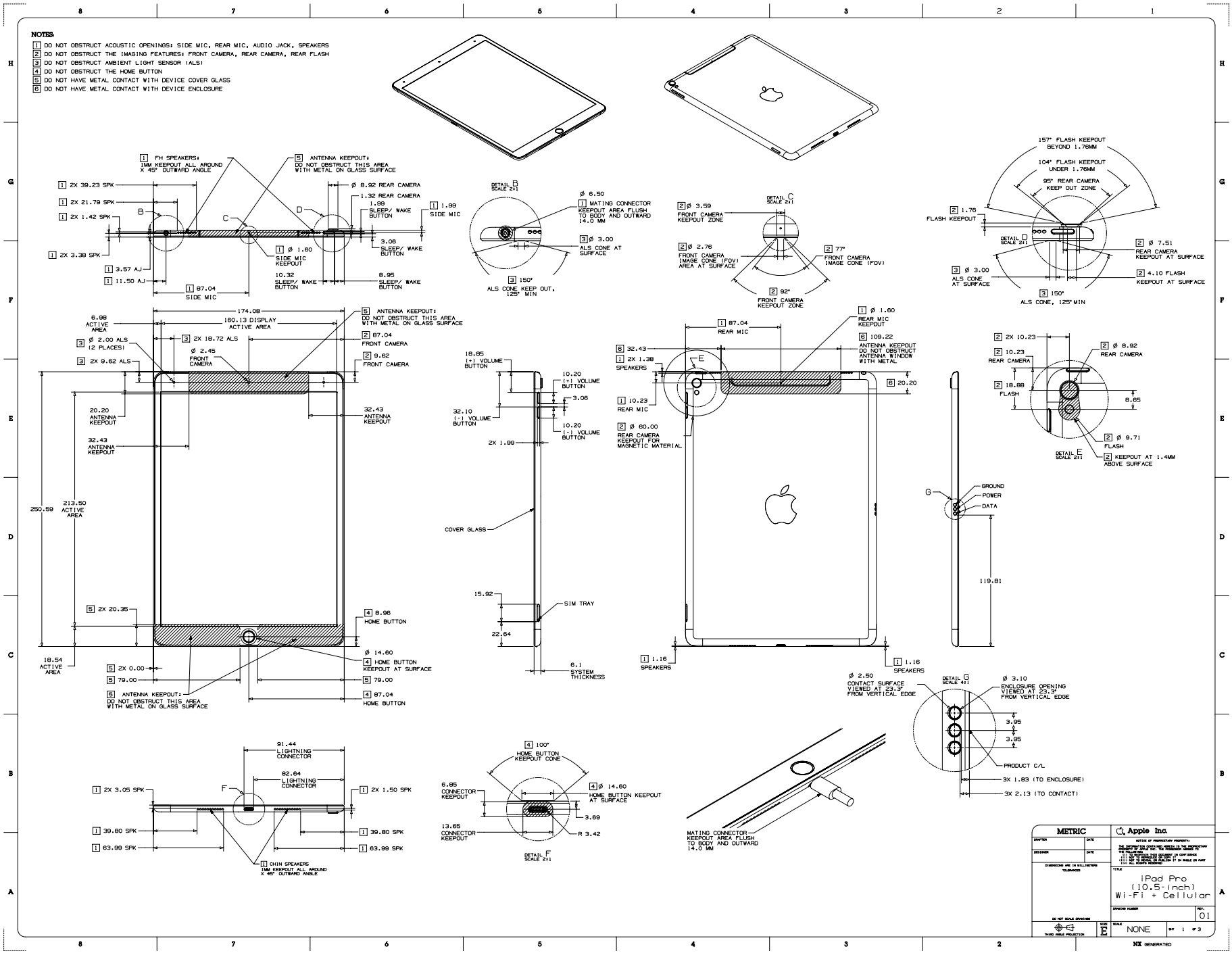

Copyright © 2022 Apple Inc. All Rights Reserved.

45.95 iPad Pro (10.5-inch) Magnet/Hall Effect Sensors 1 of 2

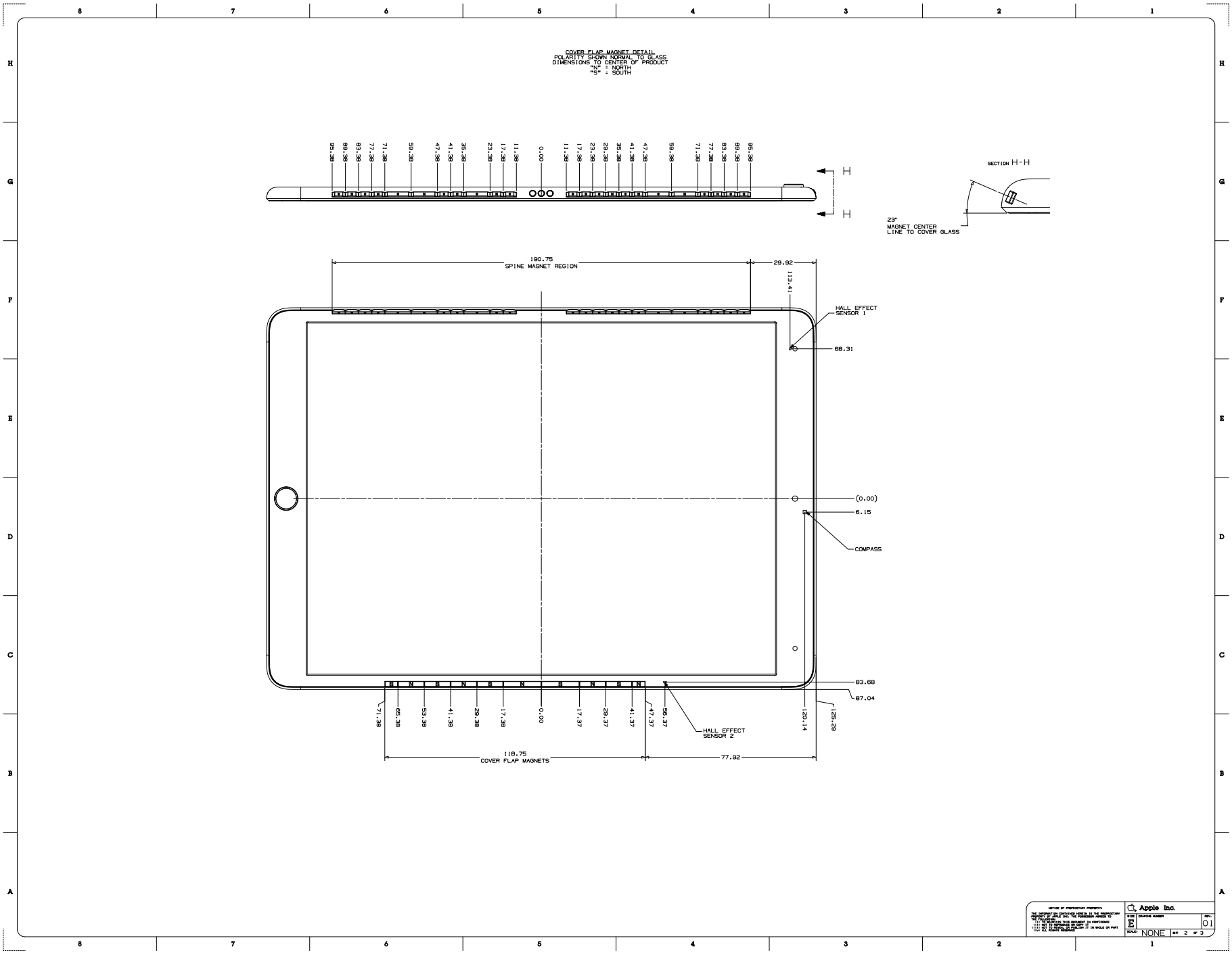

45.96 iPad Pro (10.5-inch) Magnet/Hall Effect Sensors 2 of 2

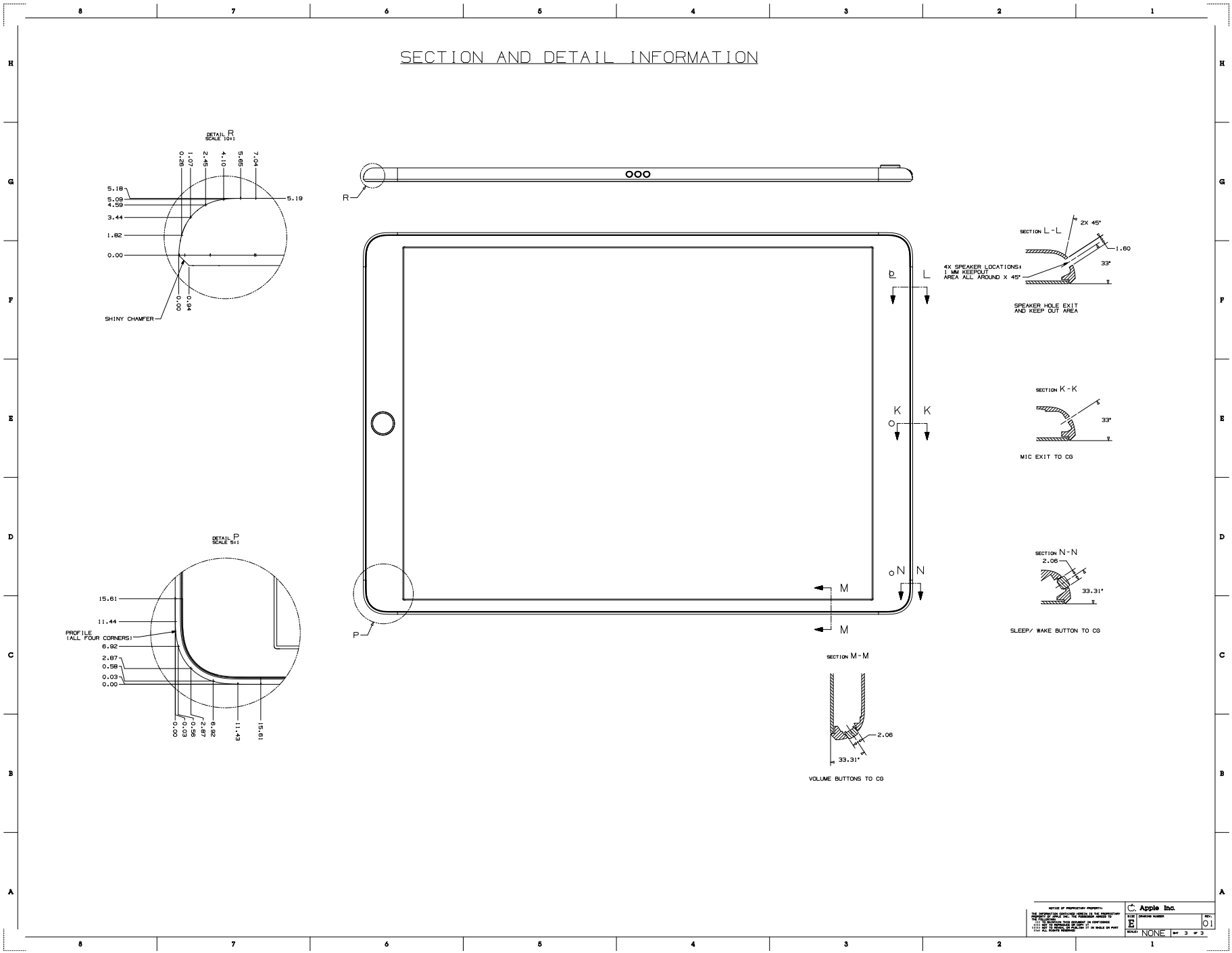

Copyright © 2022 Apple Inc. All Rights Reserved.

45.97 iPad (5th and 6th generation) with Wi-Fi + Cellular

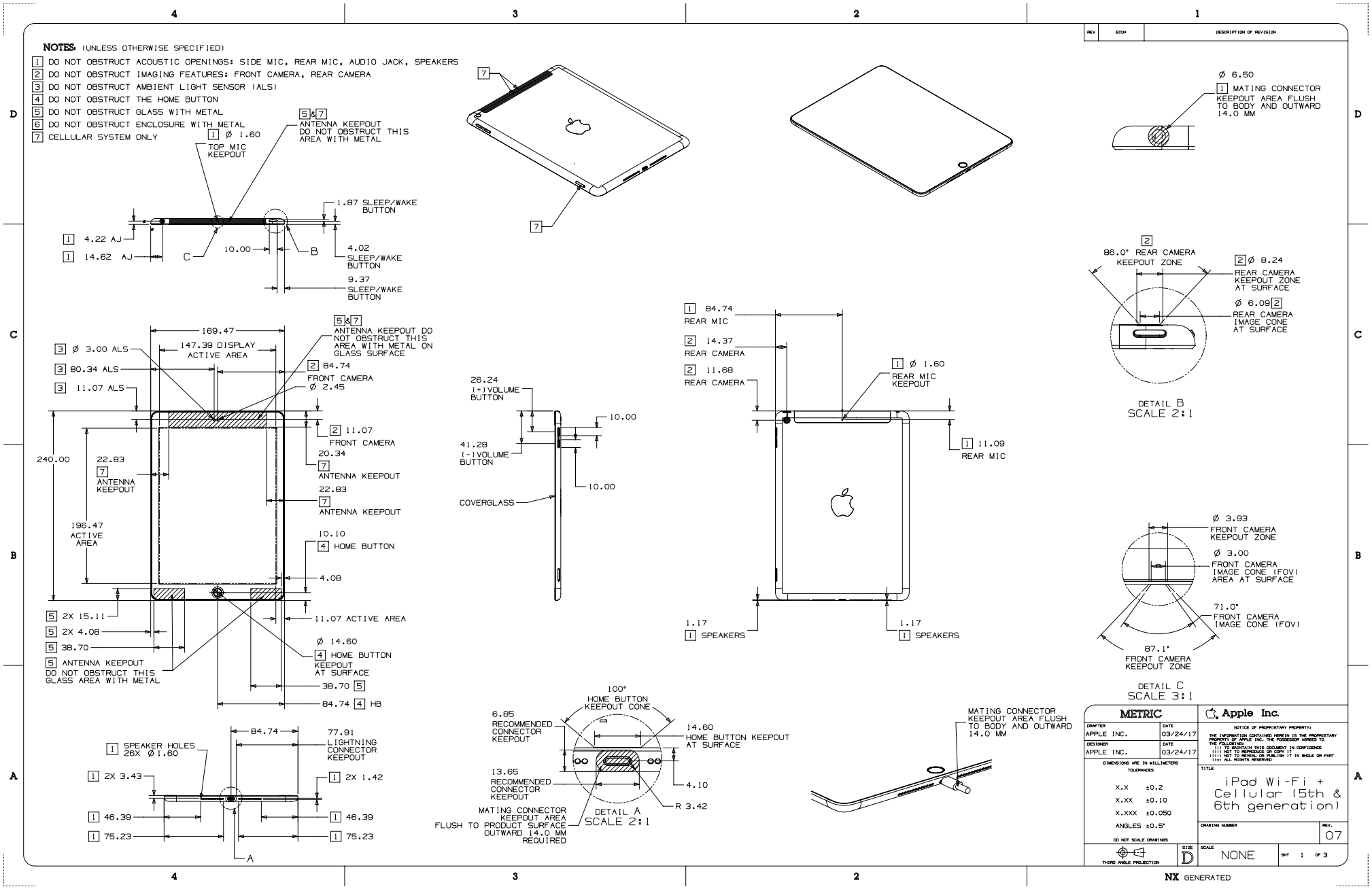

45.98 iPad (5th and 6th generation) Magnet/Hall Effect Sensors 1 of 2

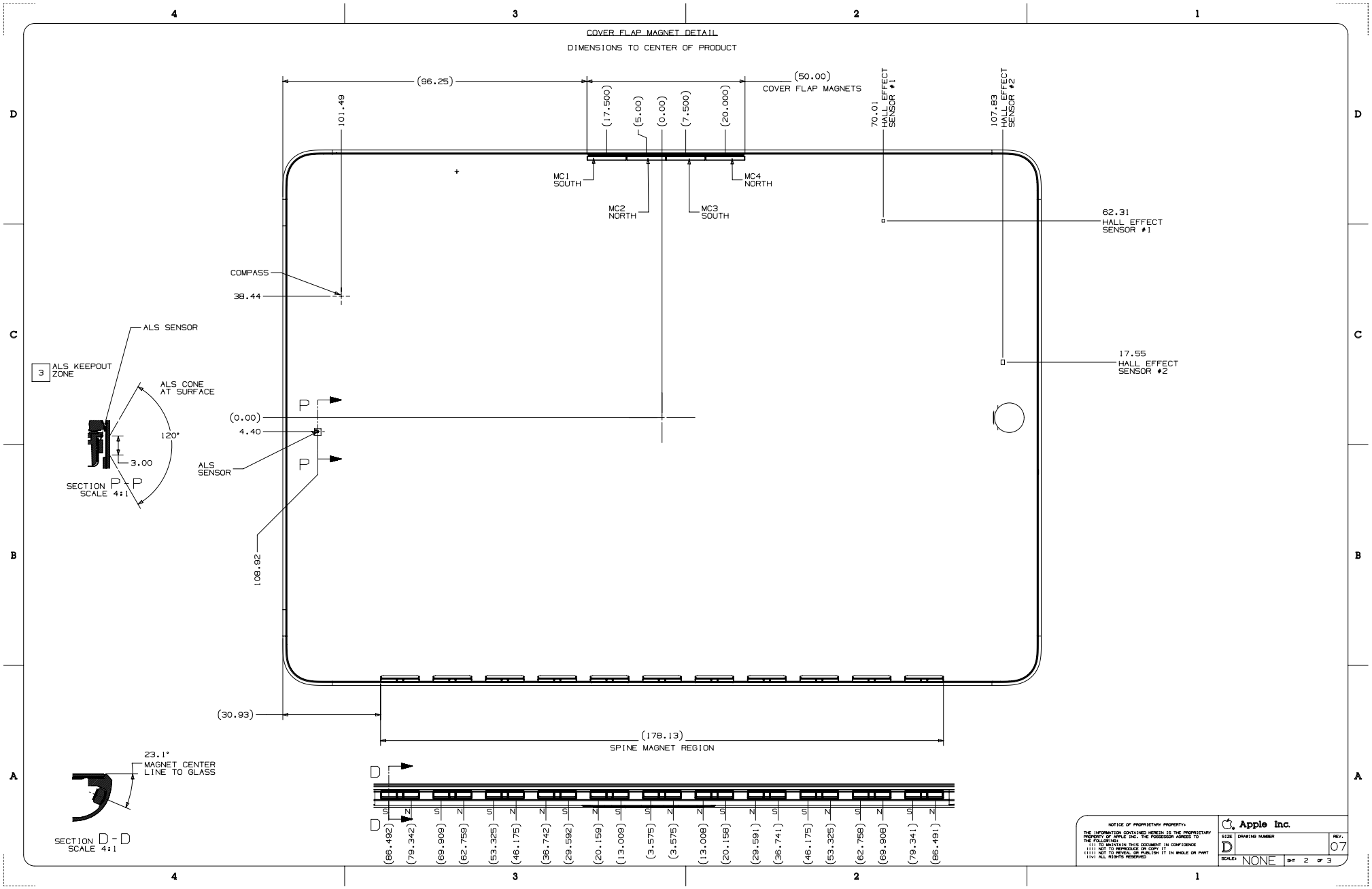

45.99 iPad (5th and 6th generation) Magnet/Hall Effect Sensors 2 of 2

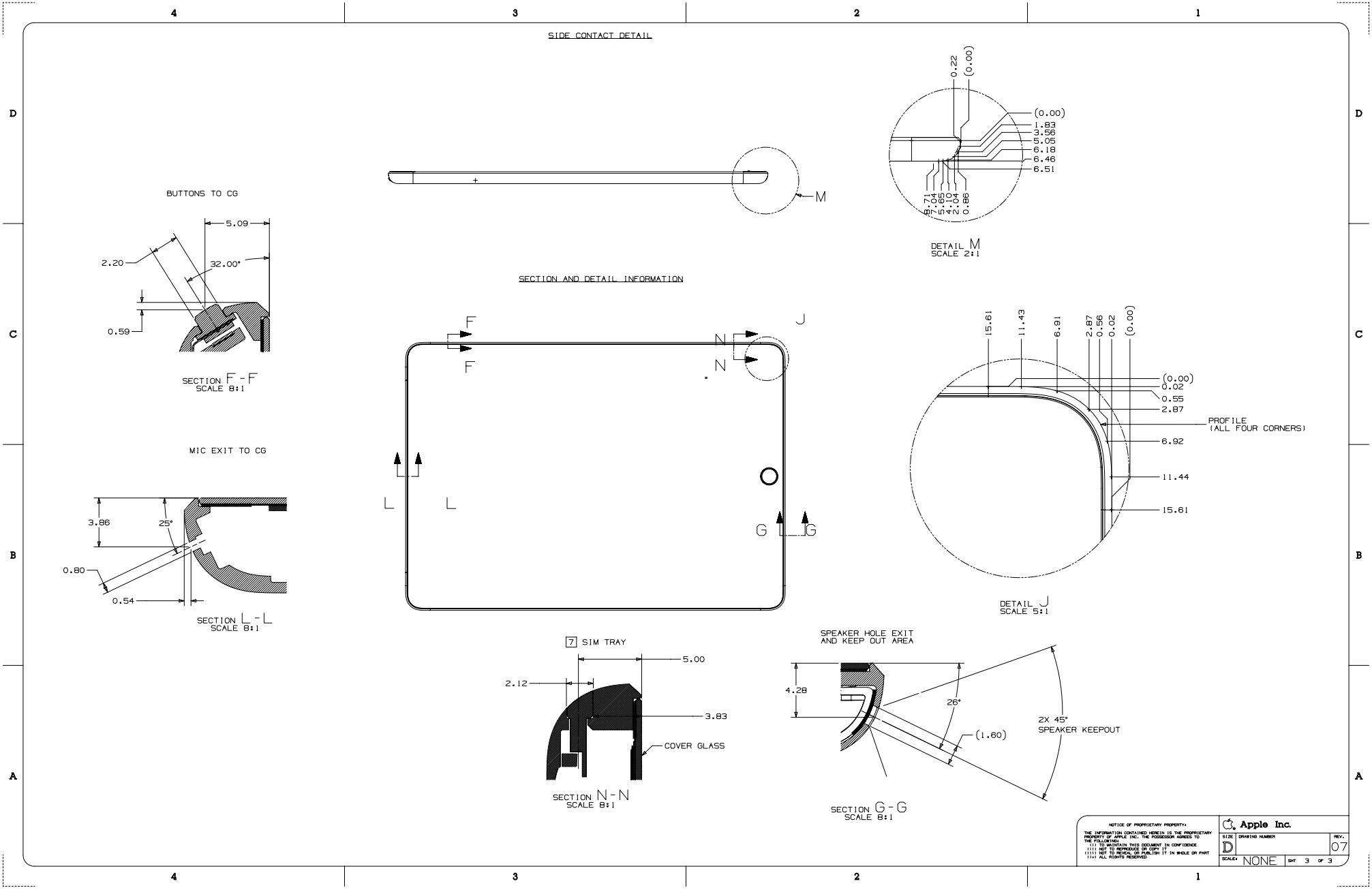

45.100 iPad Pro (9.7-inch) with Wi-Fi

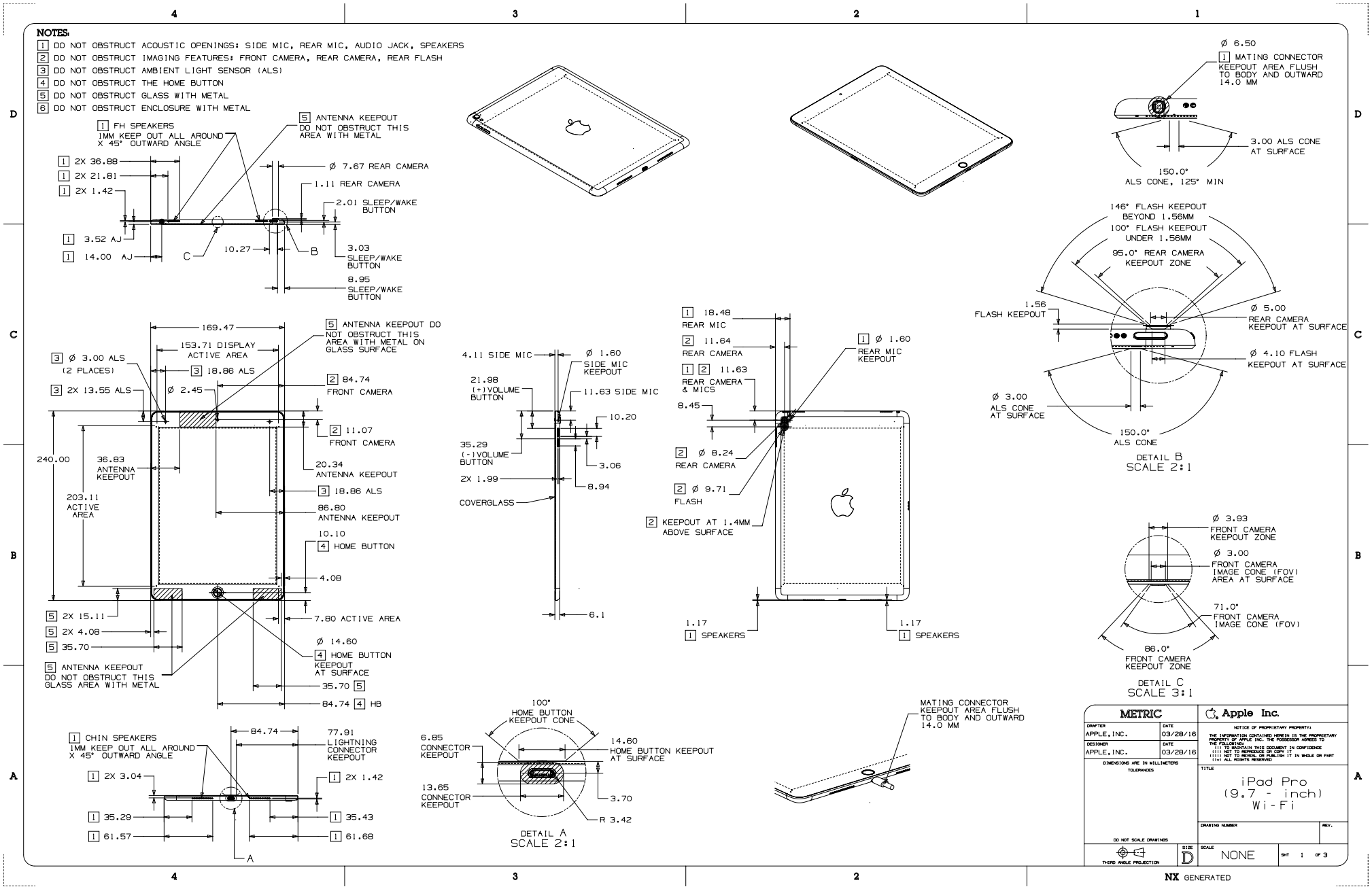

45.101 iPad Pro (9.7-inch) with Wi-Fi + Cellular

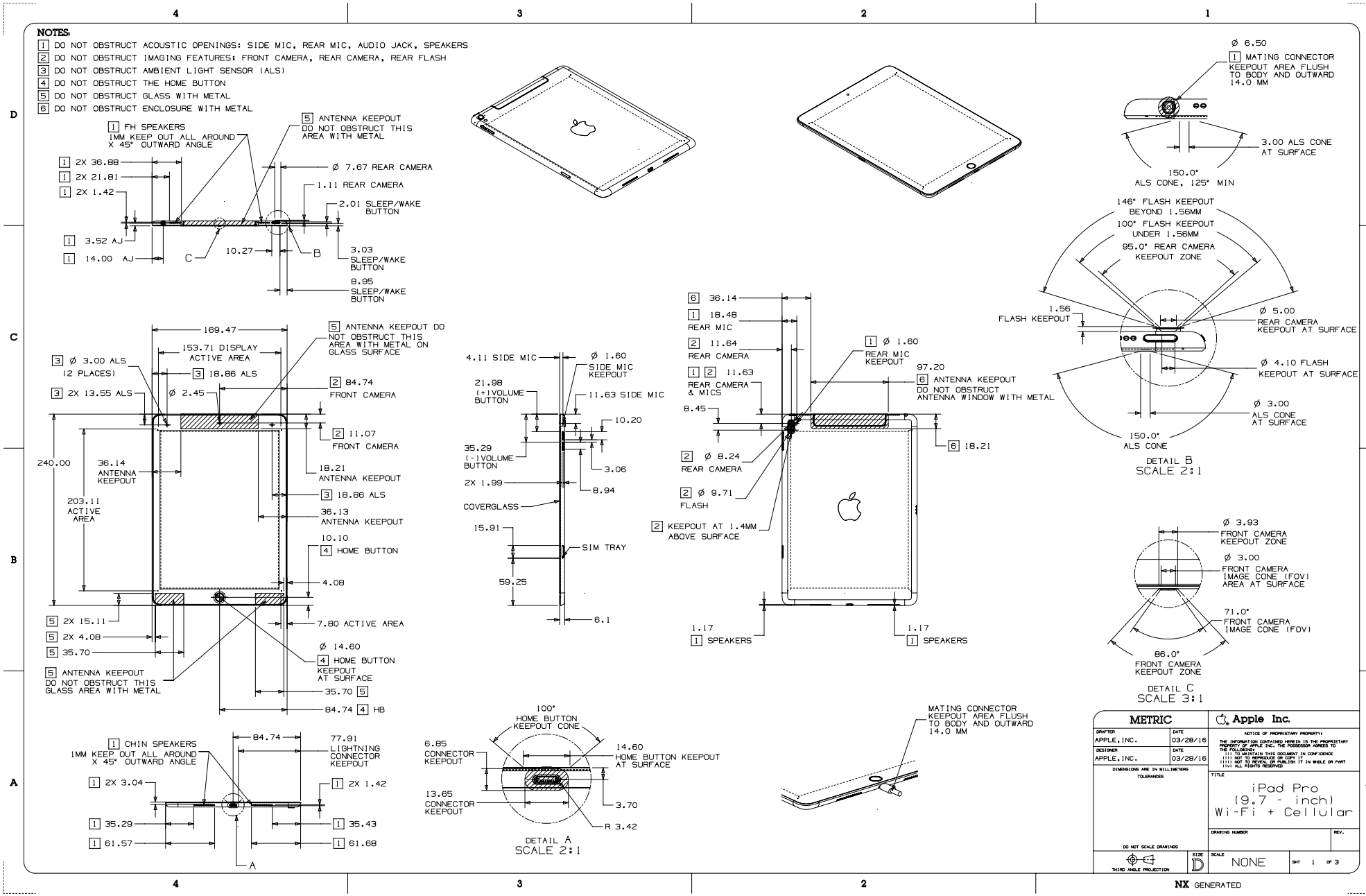

45.102 iPad Pro (9.7-inch) Magnet/Hall Effect Sensors 1 of 2

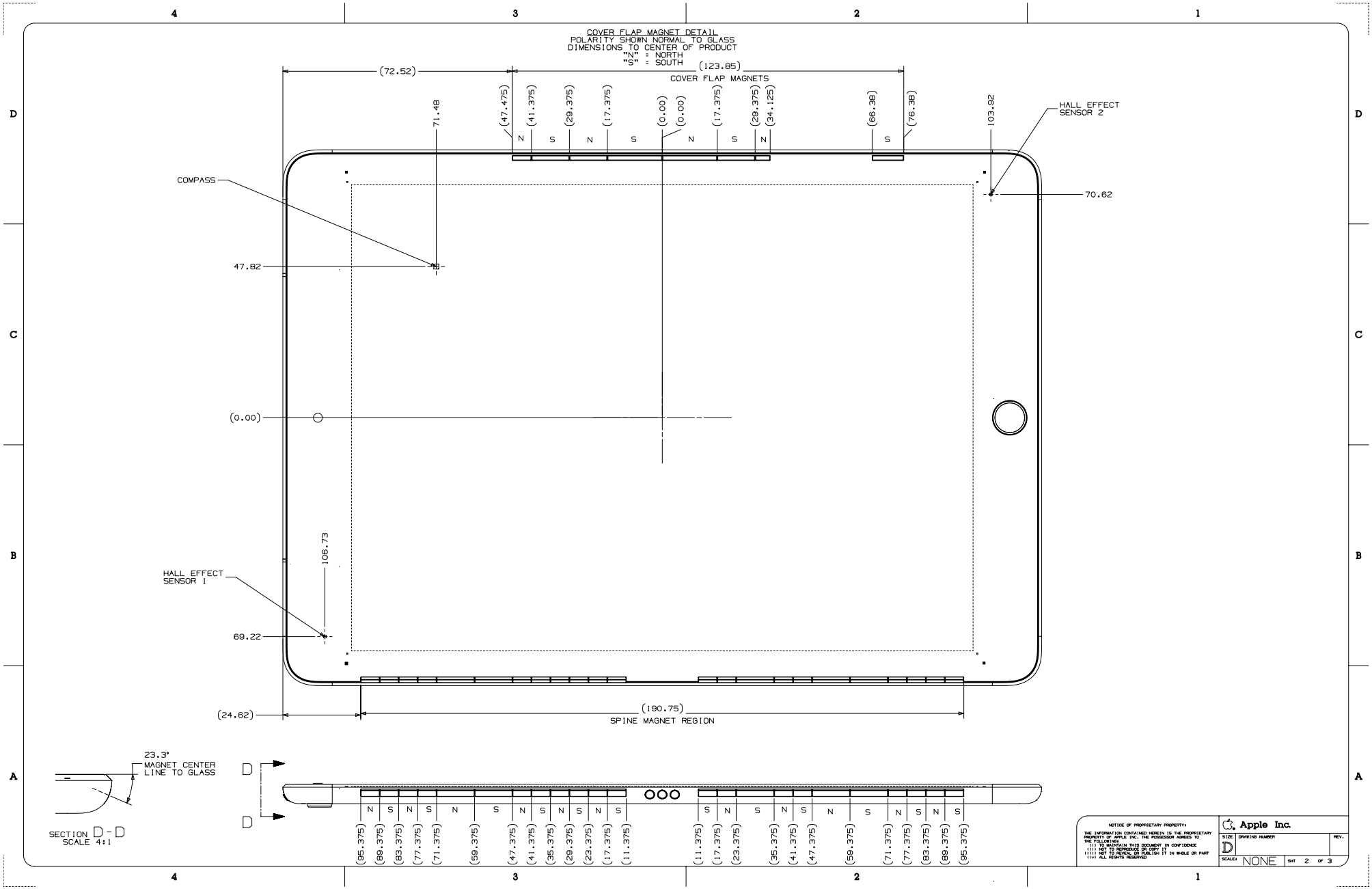

45.103 iPad Pro (9.7-inch) Magnet/Hall Effect Sensors 2 of 2

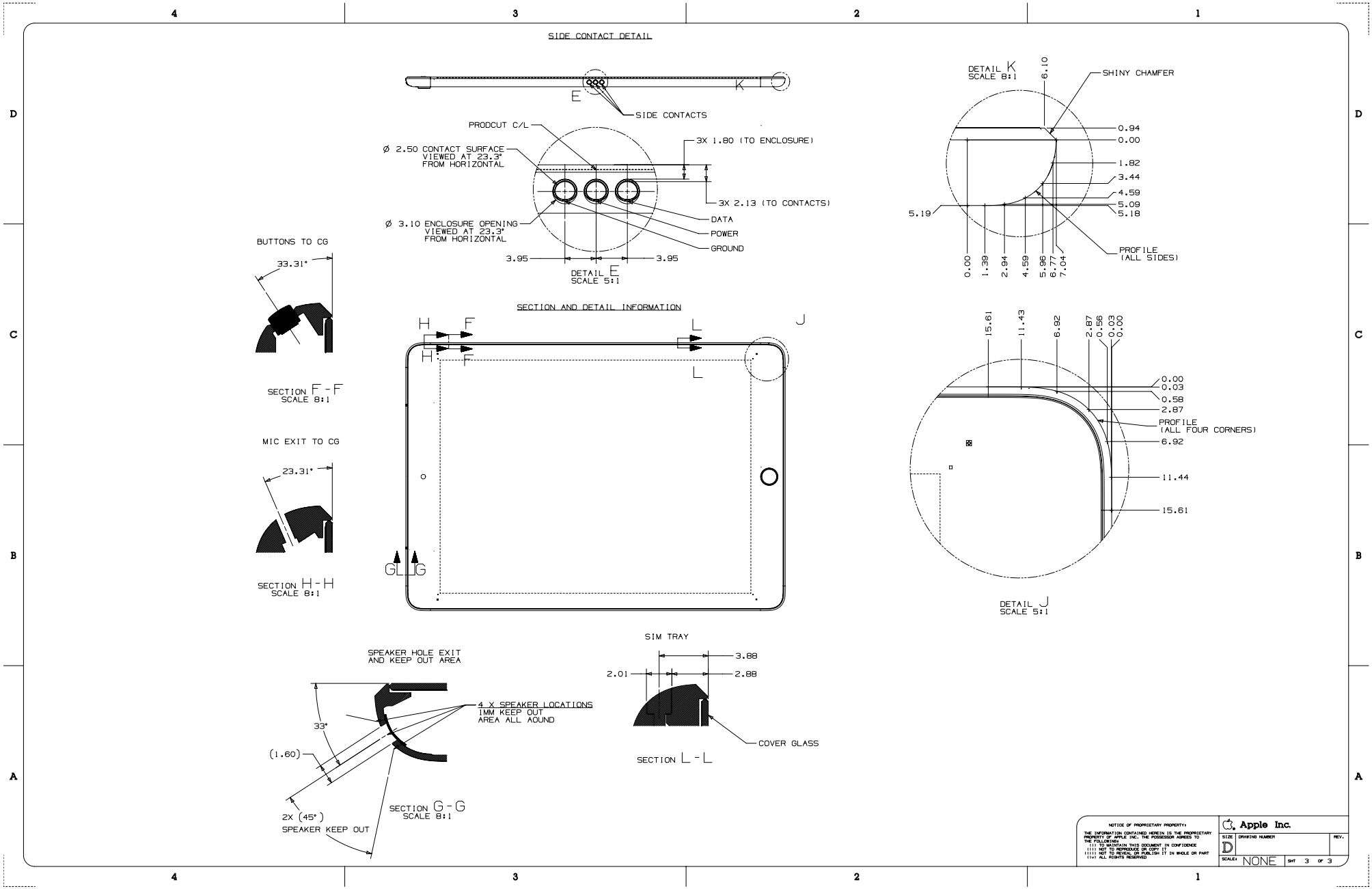

45.104 iPad Pro (12.9-inch) 1st Generation with Wi-Fi

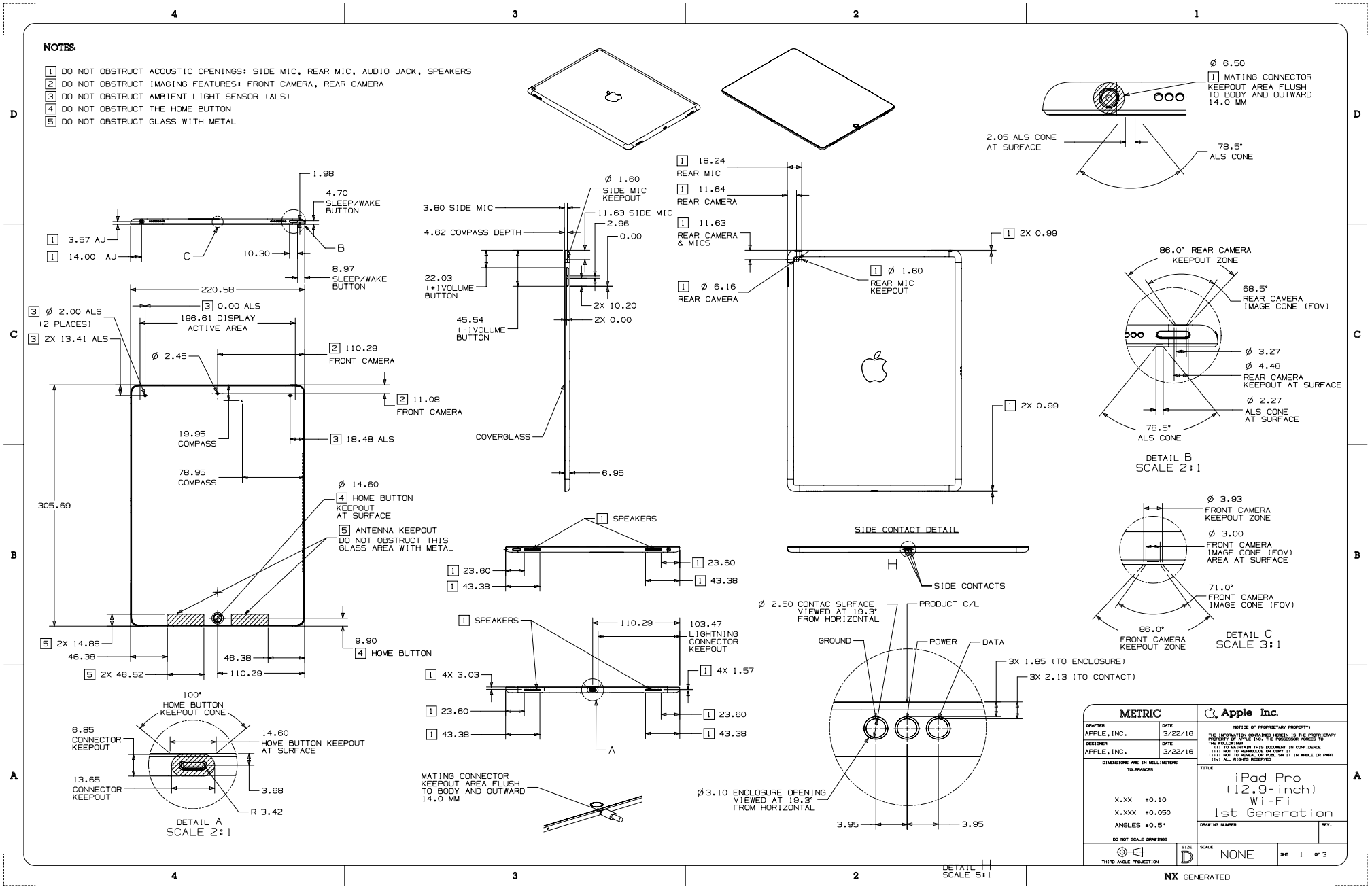

45.105 iPad Pro (12.9-inch) 1st Generation with Wi-Fi + Cellular

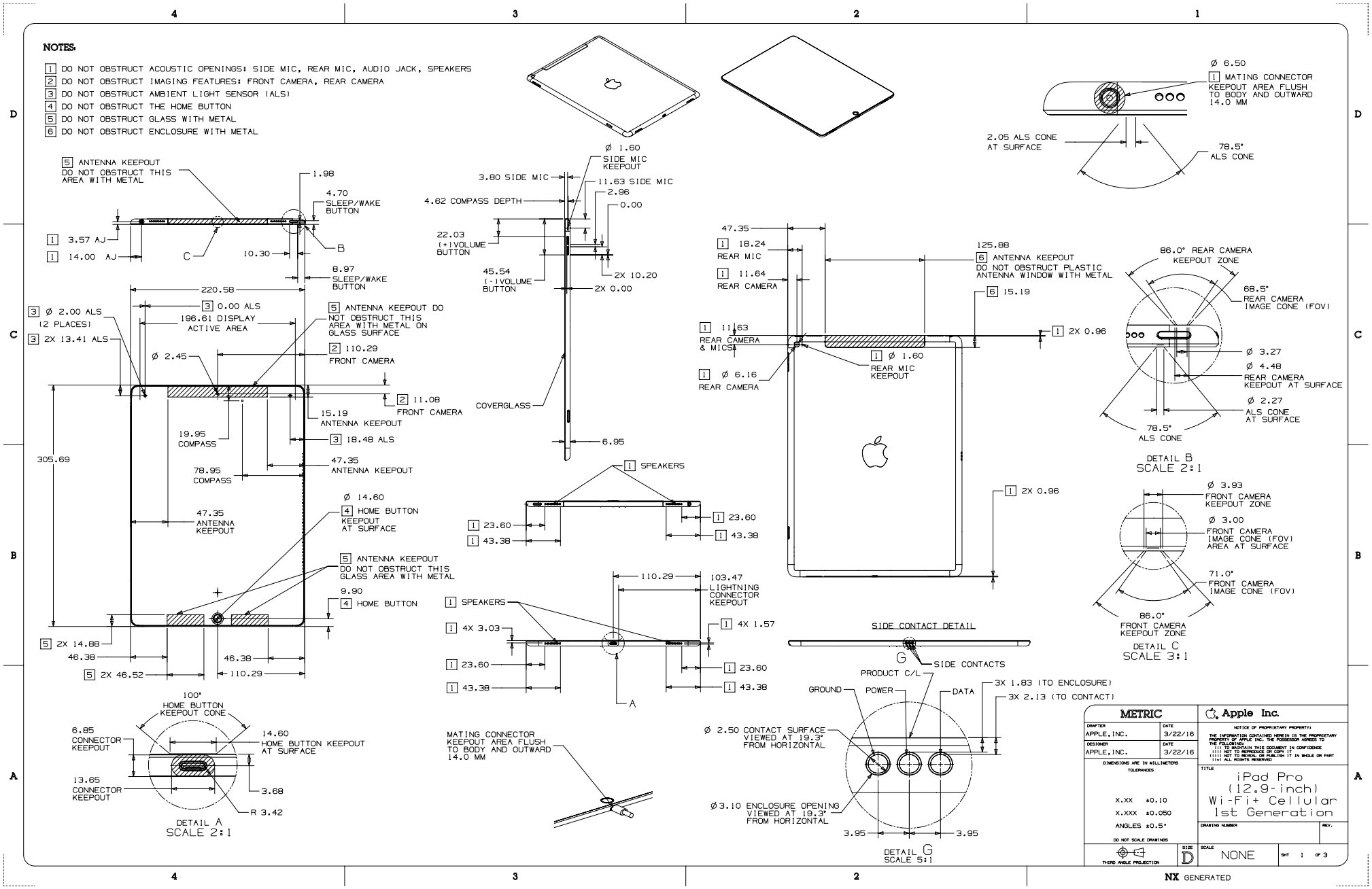

45.106 iPad Pro (12.9-inch) 1st Generation Magnet/Hall Effect Sensors 1 of 2

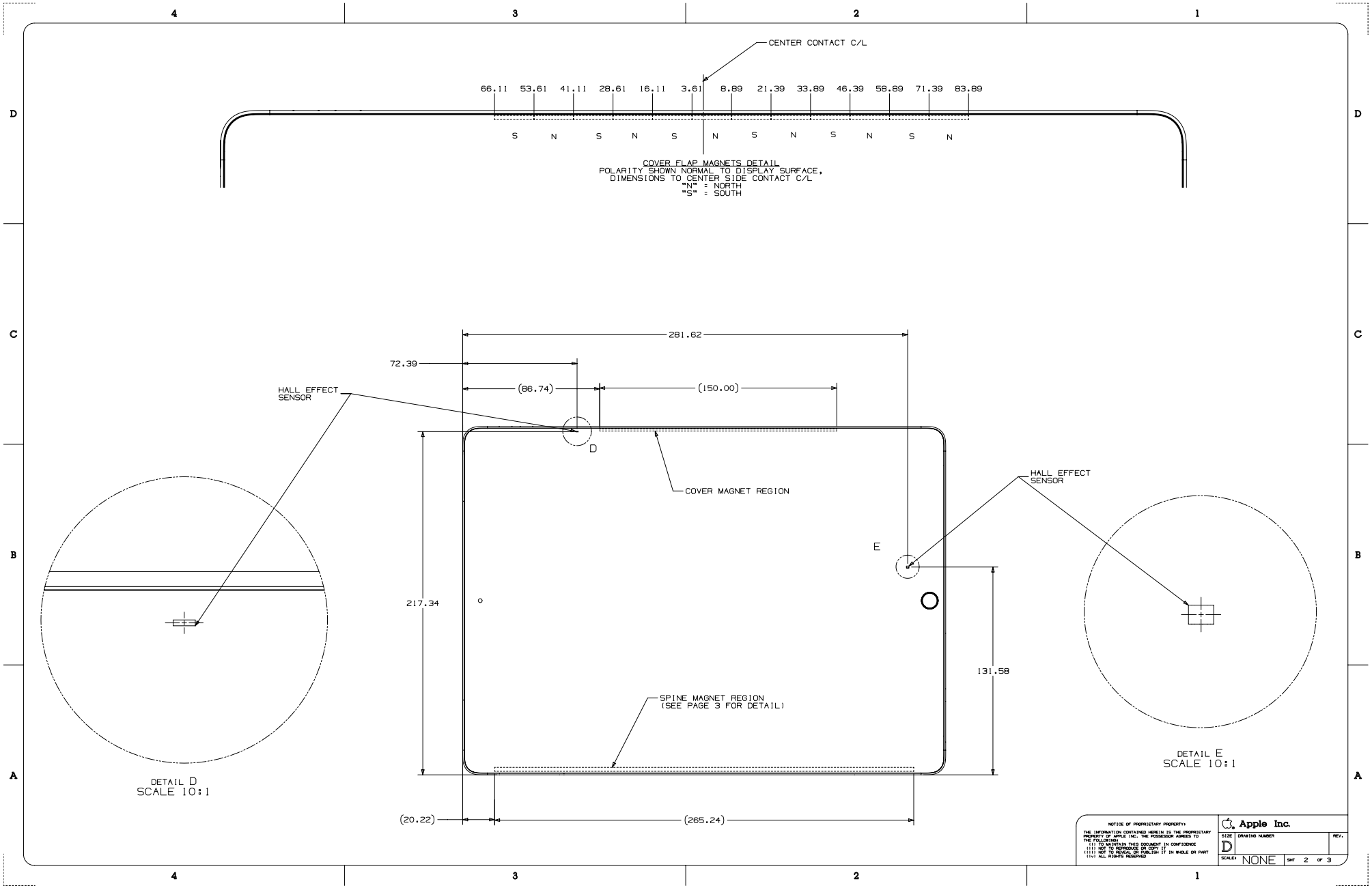

45.107 iPad Pro (12.9-inch) 1st Generation Magnet/Hall Effect Sensors 2 of 2

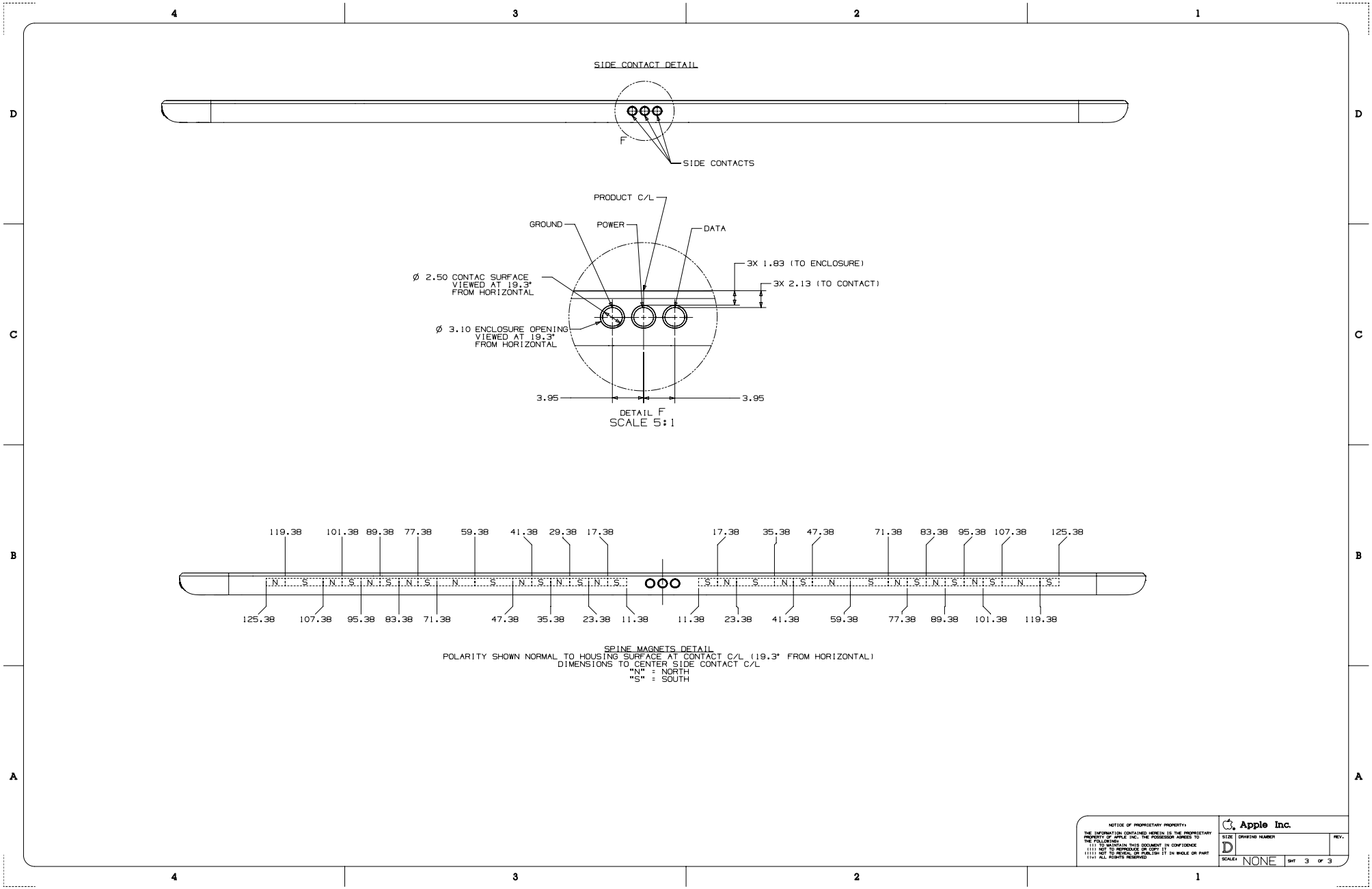

45.108 iPad mini 4 with Wi-Fi

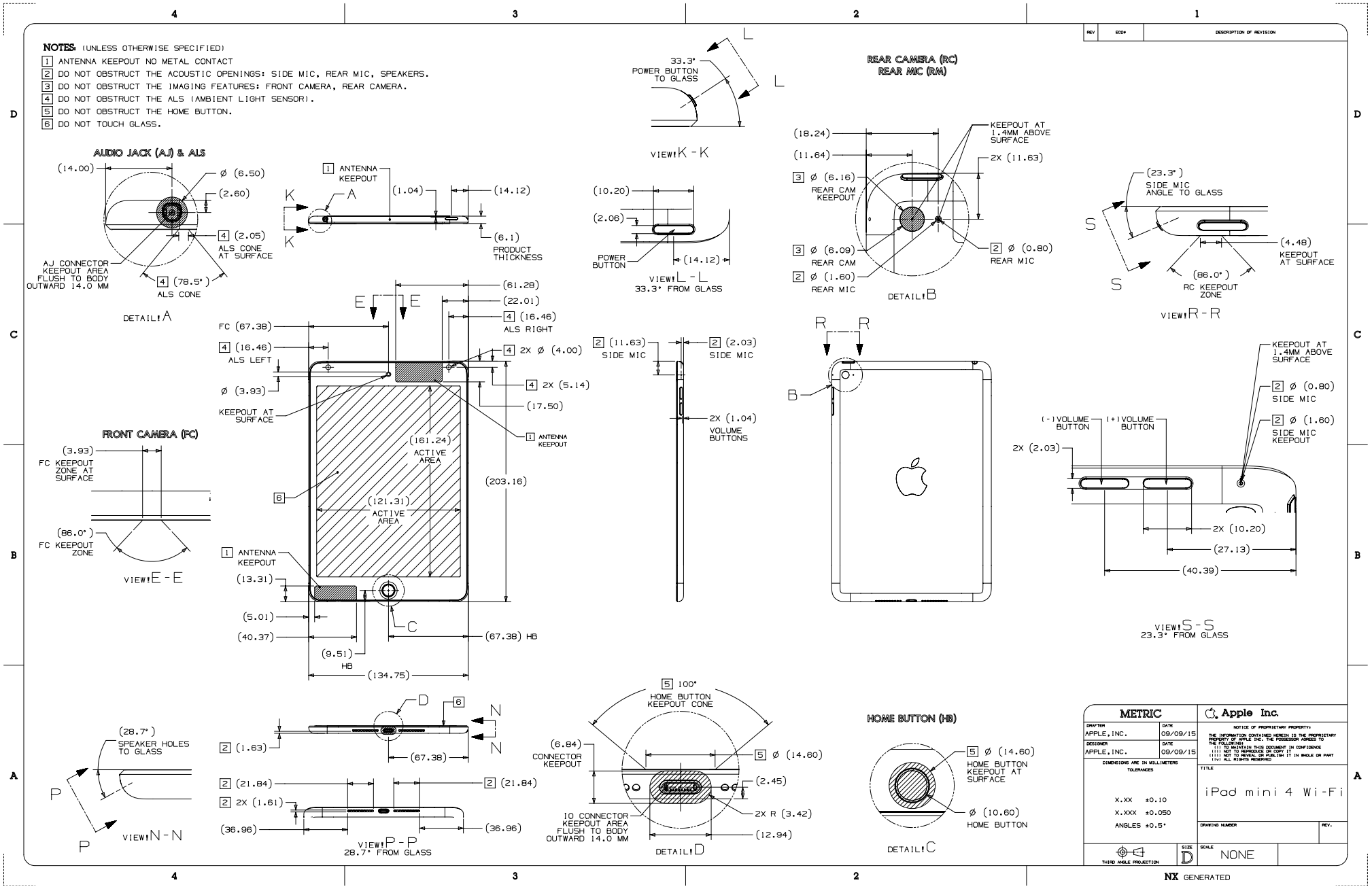

45.109 iPad mini 4 with Wi-Fi + Cellular

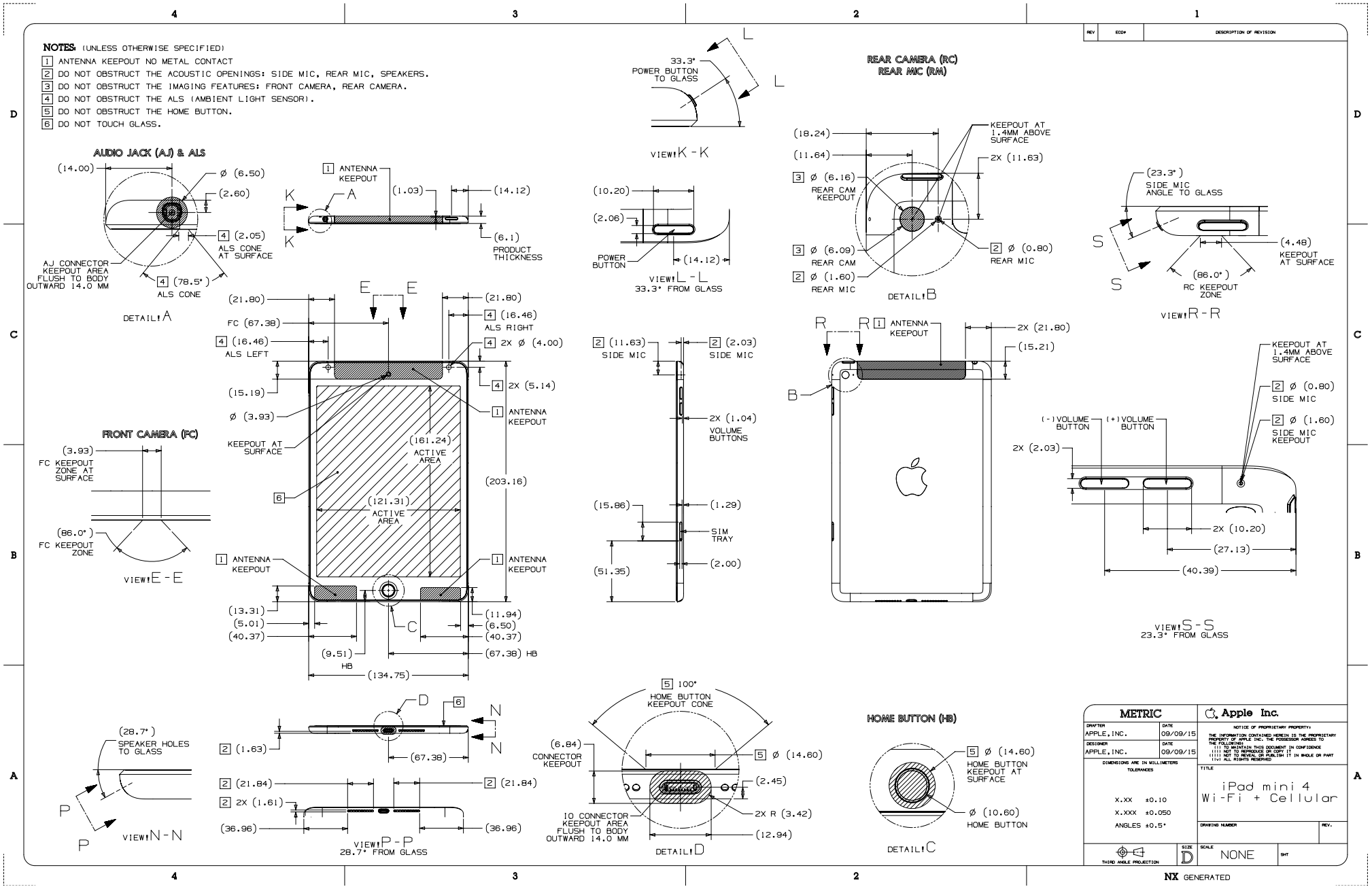

45.110 iPad mini 4 Magnet/Hall Effect Sensors

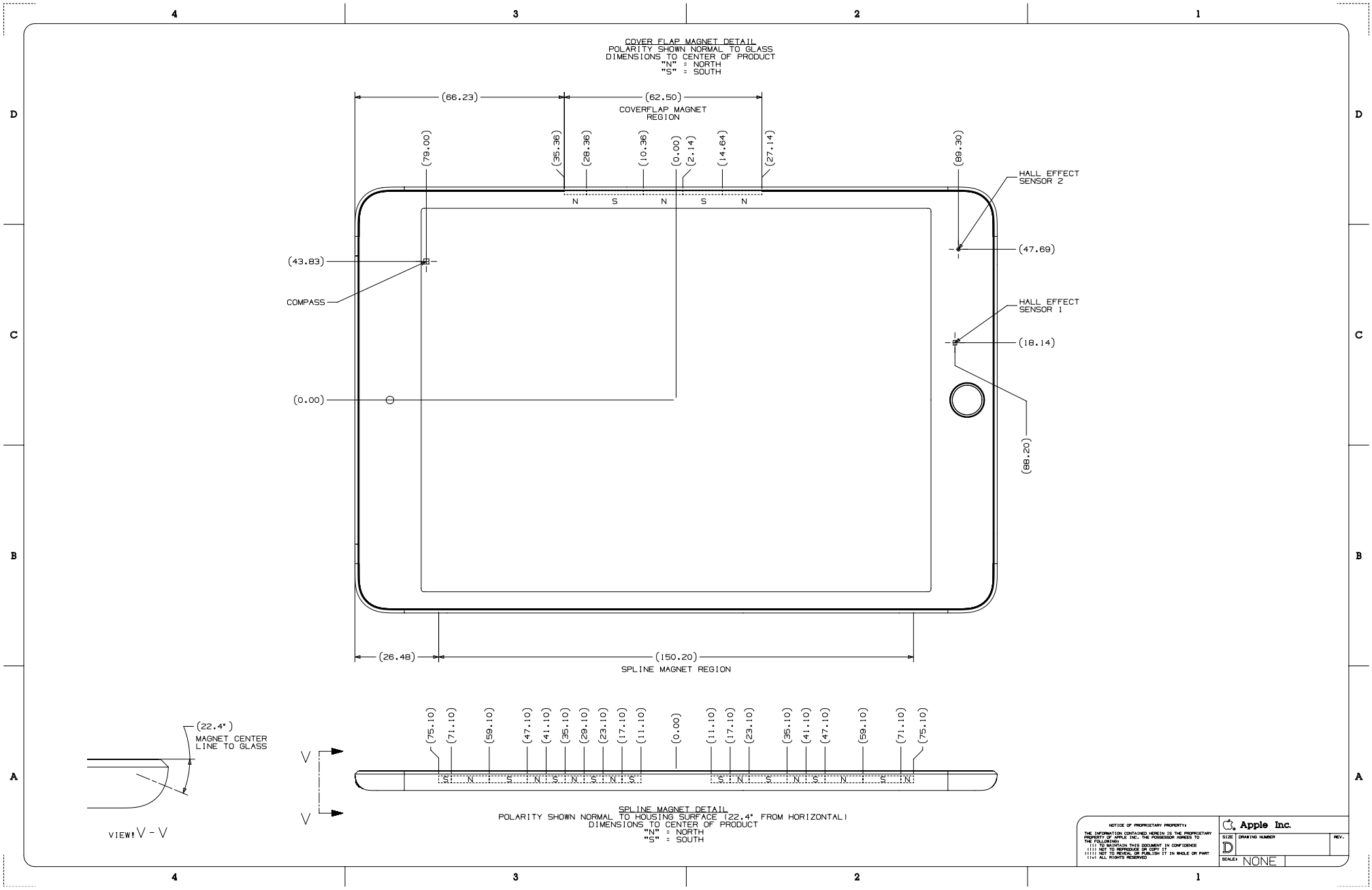

45.111 iPad Air 2 with Wi-Fi

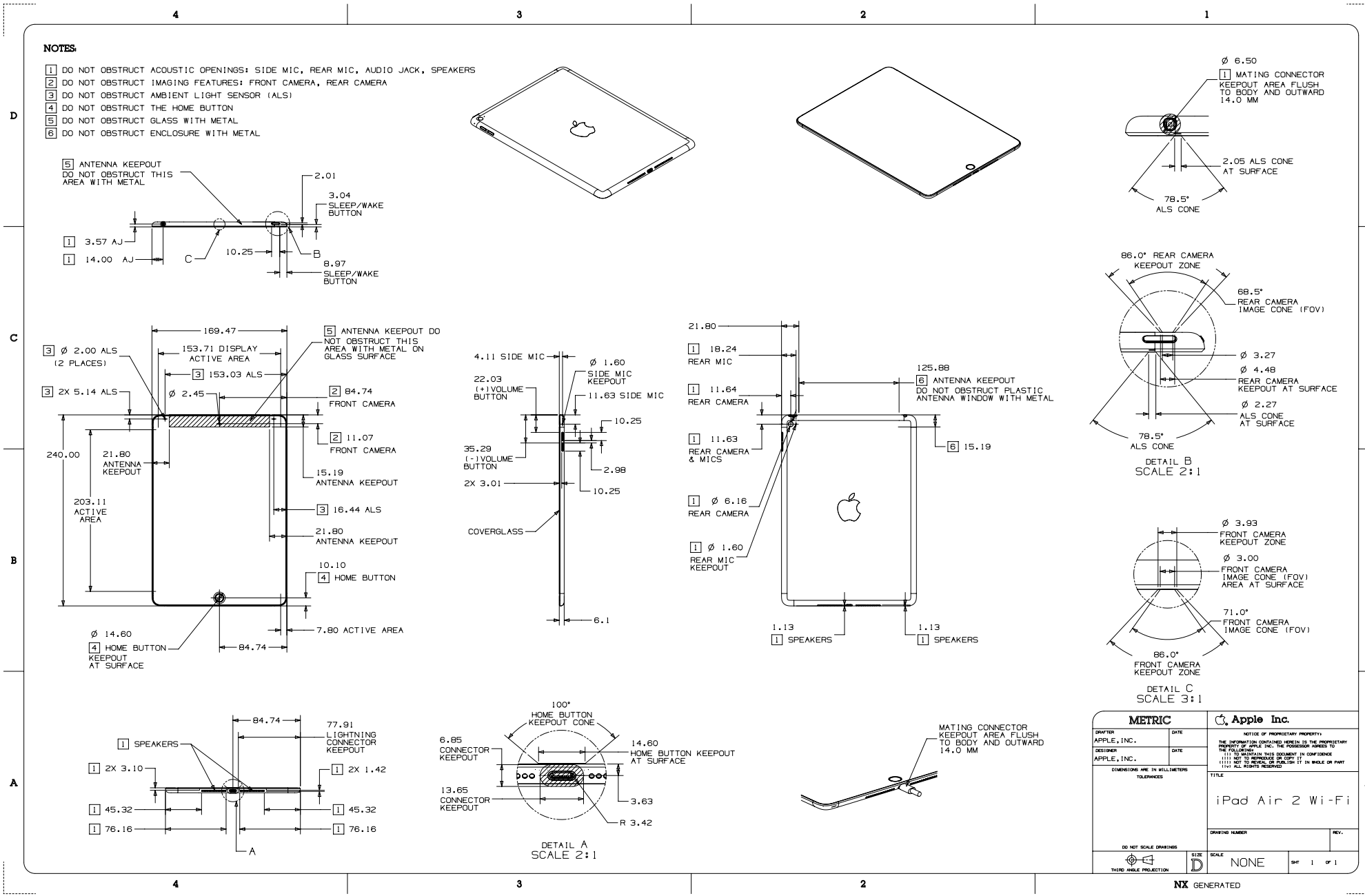

45.112 iPad Air 2 with Wi-Fi + Cellular

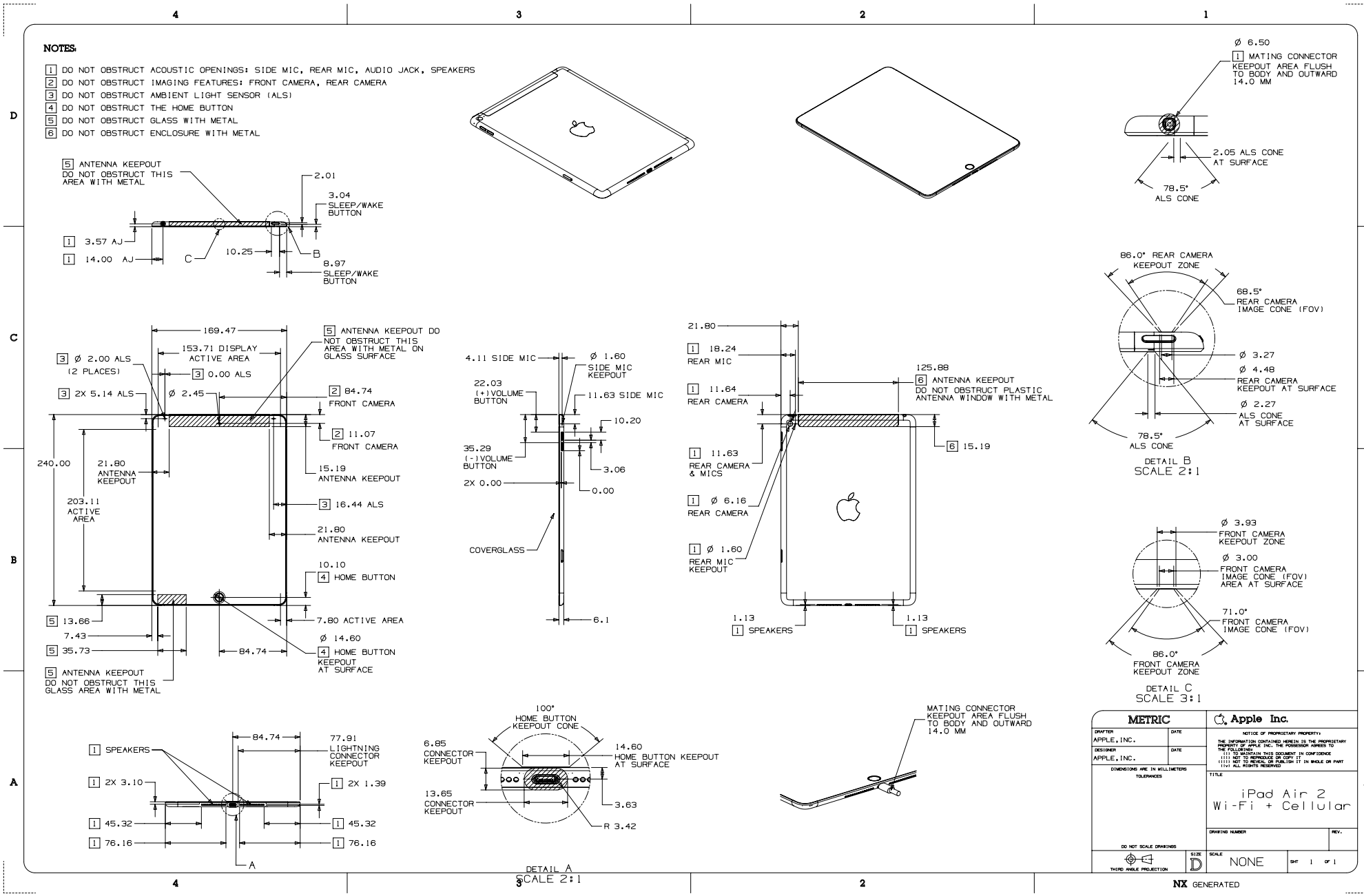

45.113 iPad mini 2 and iPad mini 3 with Wi-Fi

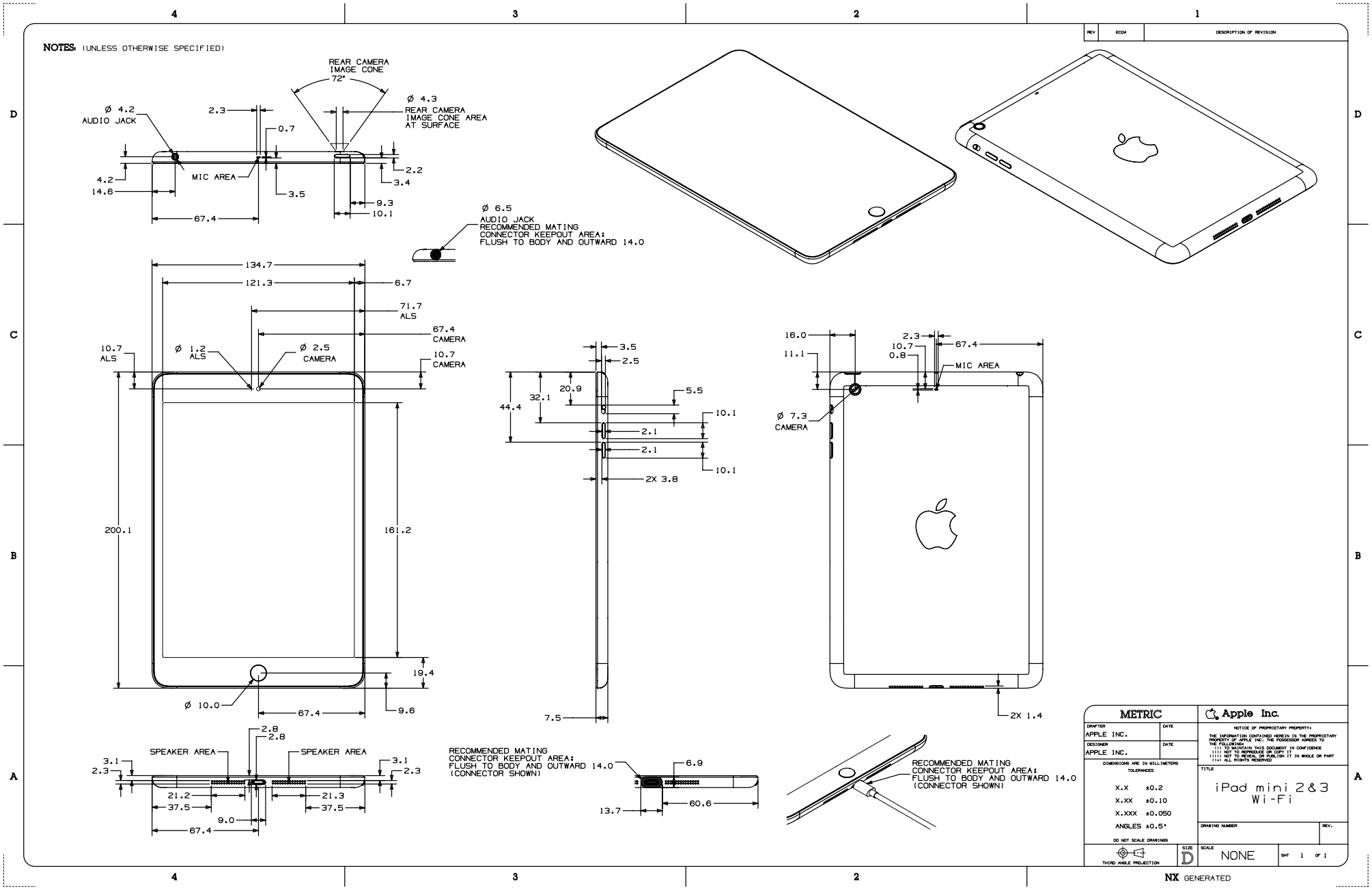

45.114 iPad mini 2 and iPad mini 3 with Wi-Fi + Cellular

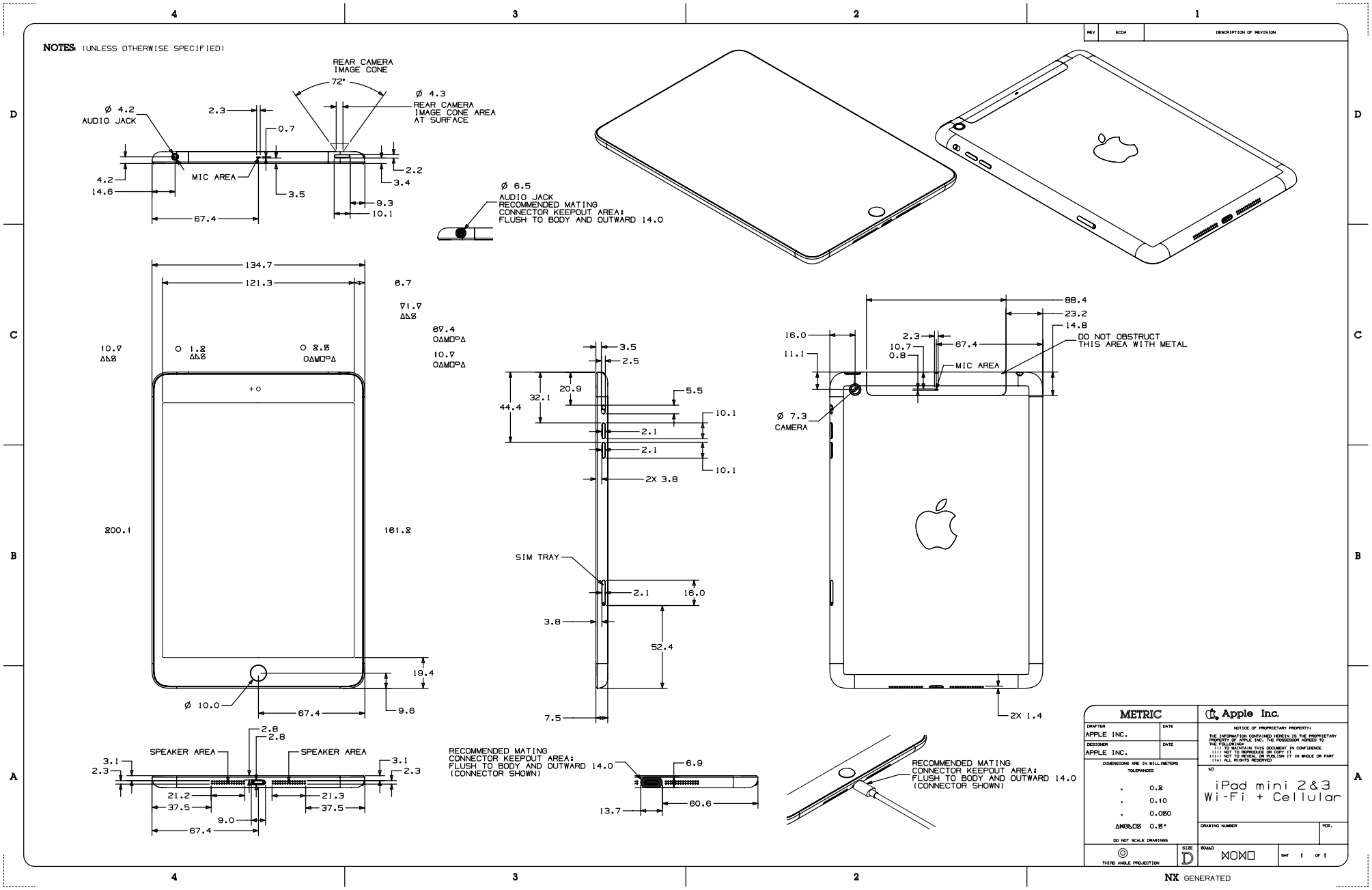

45.115 iPad Air with Wi-Fi

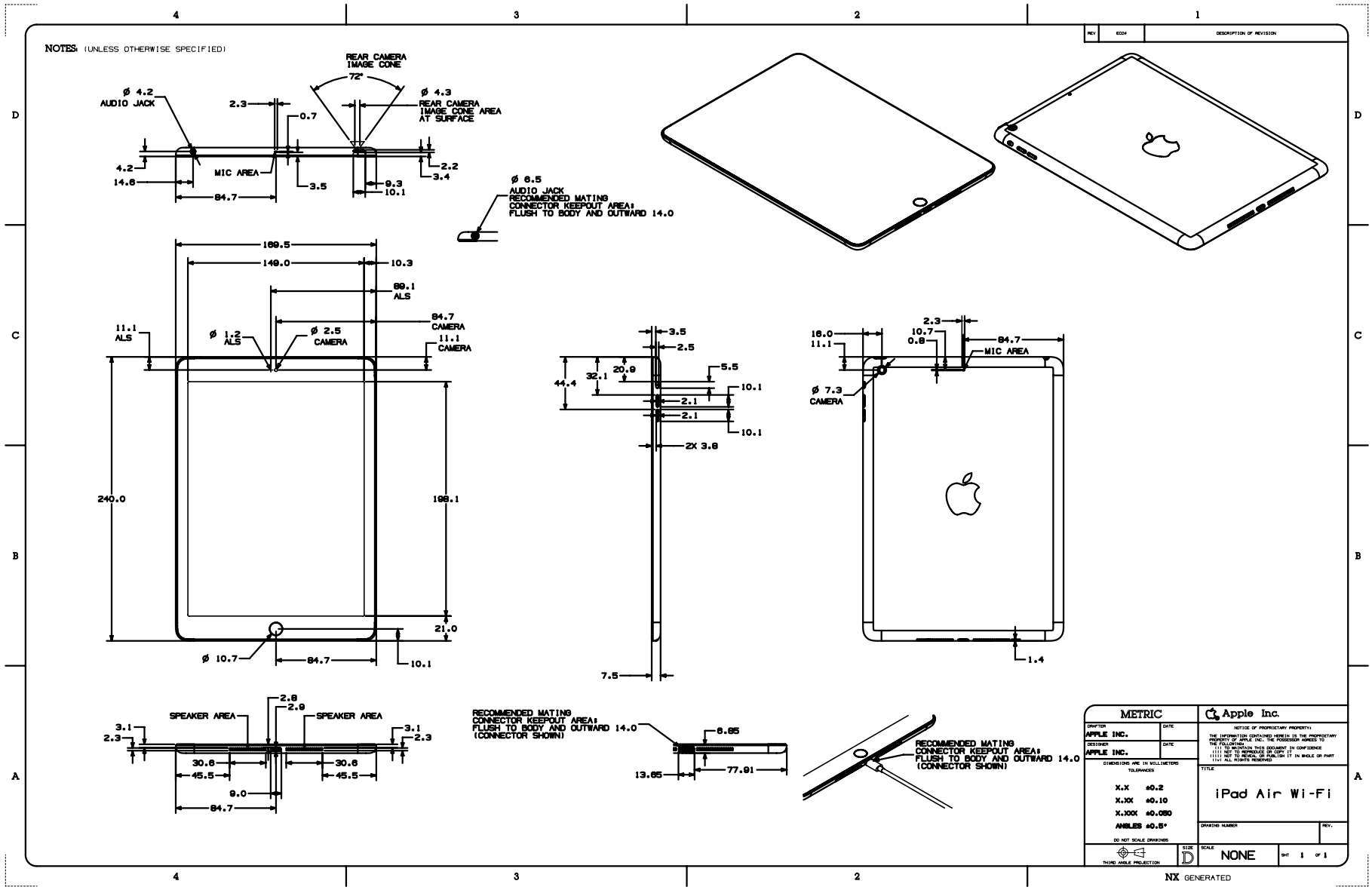

45.116 iPad Air with Wi-Fi + Cellular

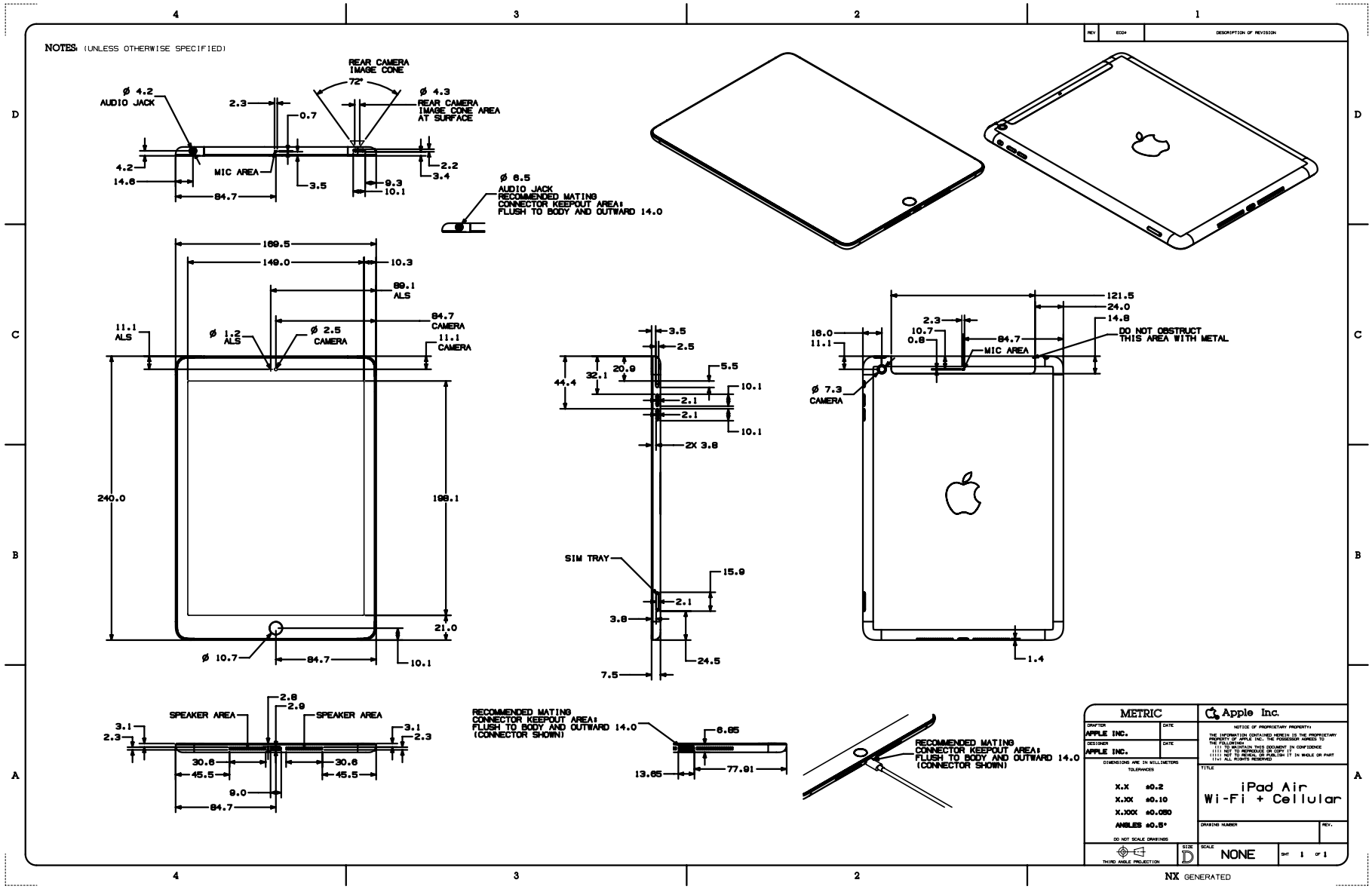

45.117 iPad mini with Wi-Fi

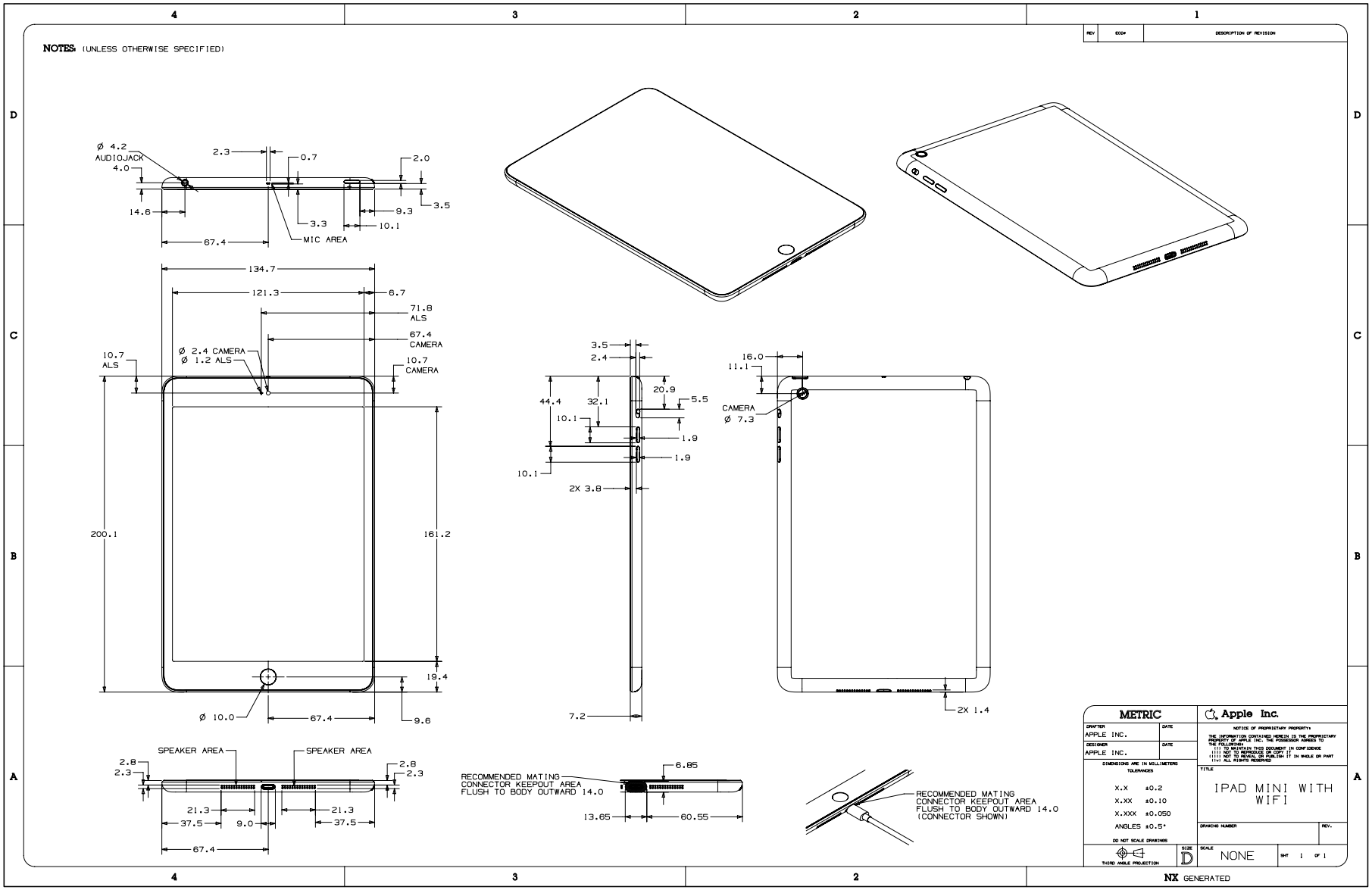

45.118 iPad mini with Wi-Fi + Cellular

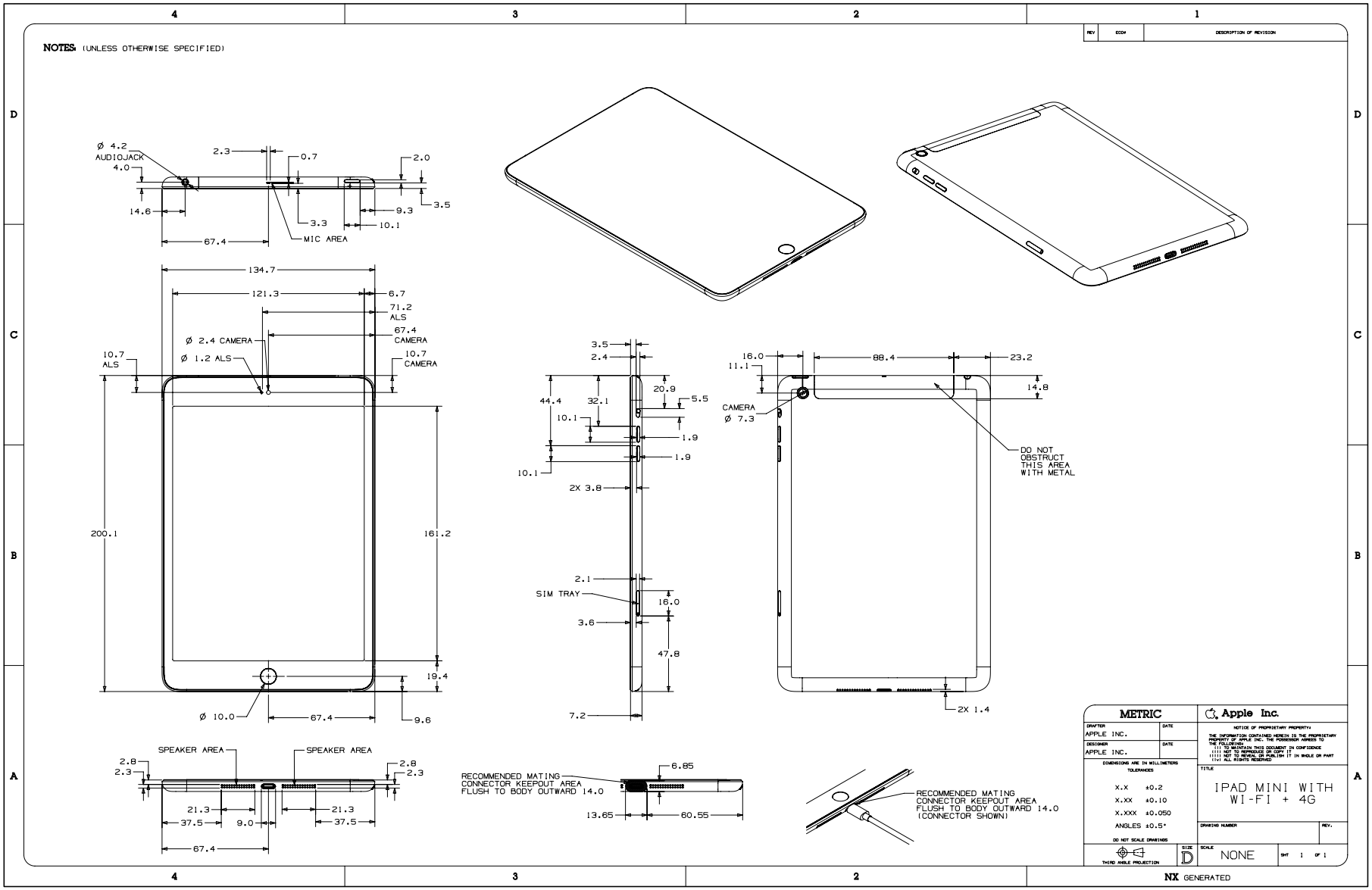

45.119 iPad (4th generation) with Wi-Fi

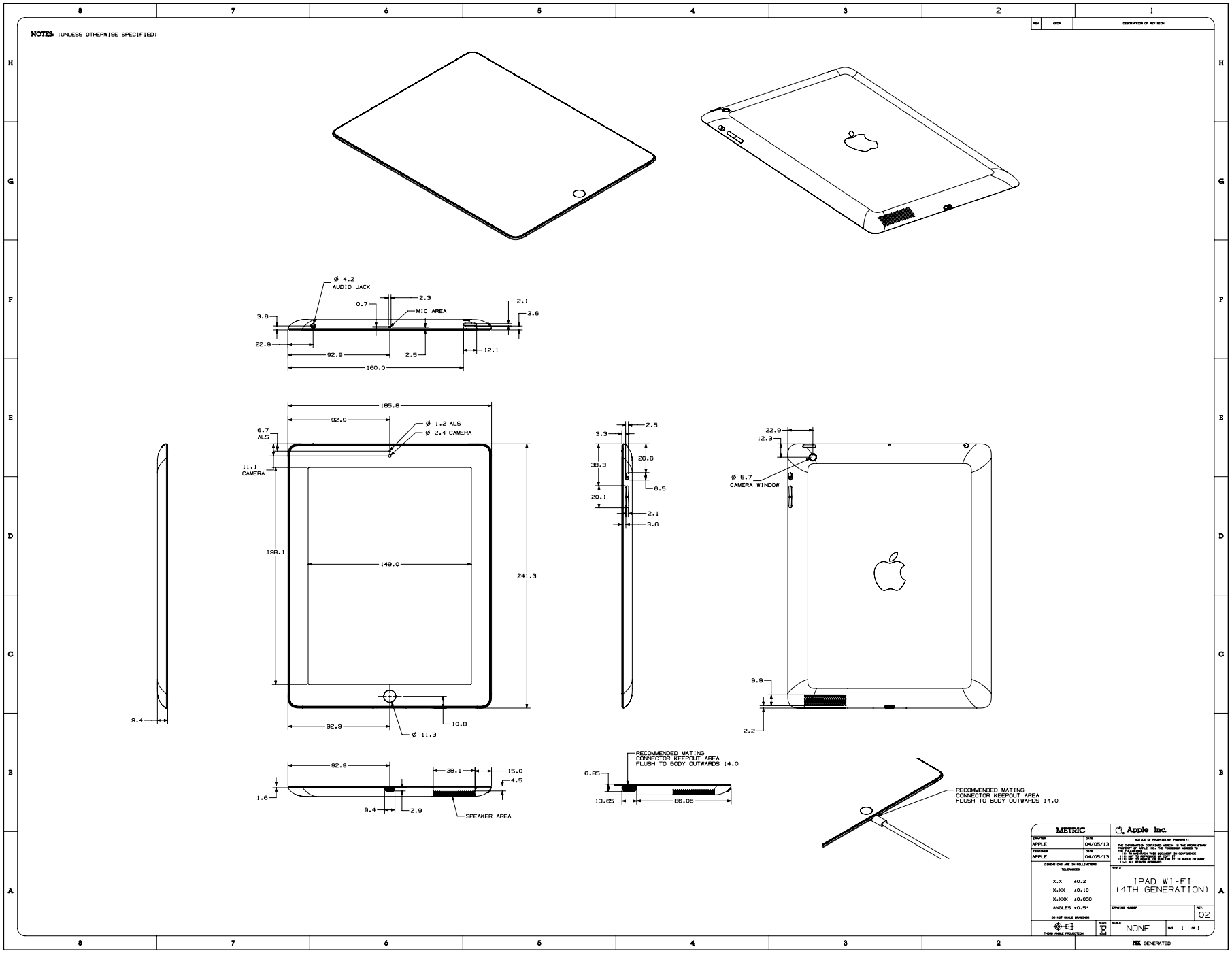

Copyright © 2022 Apple Inc. All Rights Reserved.

45.120 iPad (4th generation) with Wi-Fi + Cellular

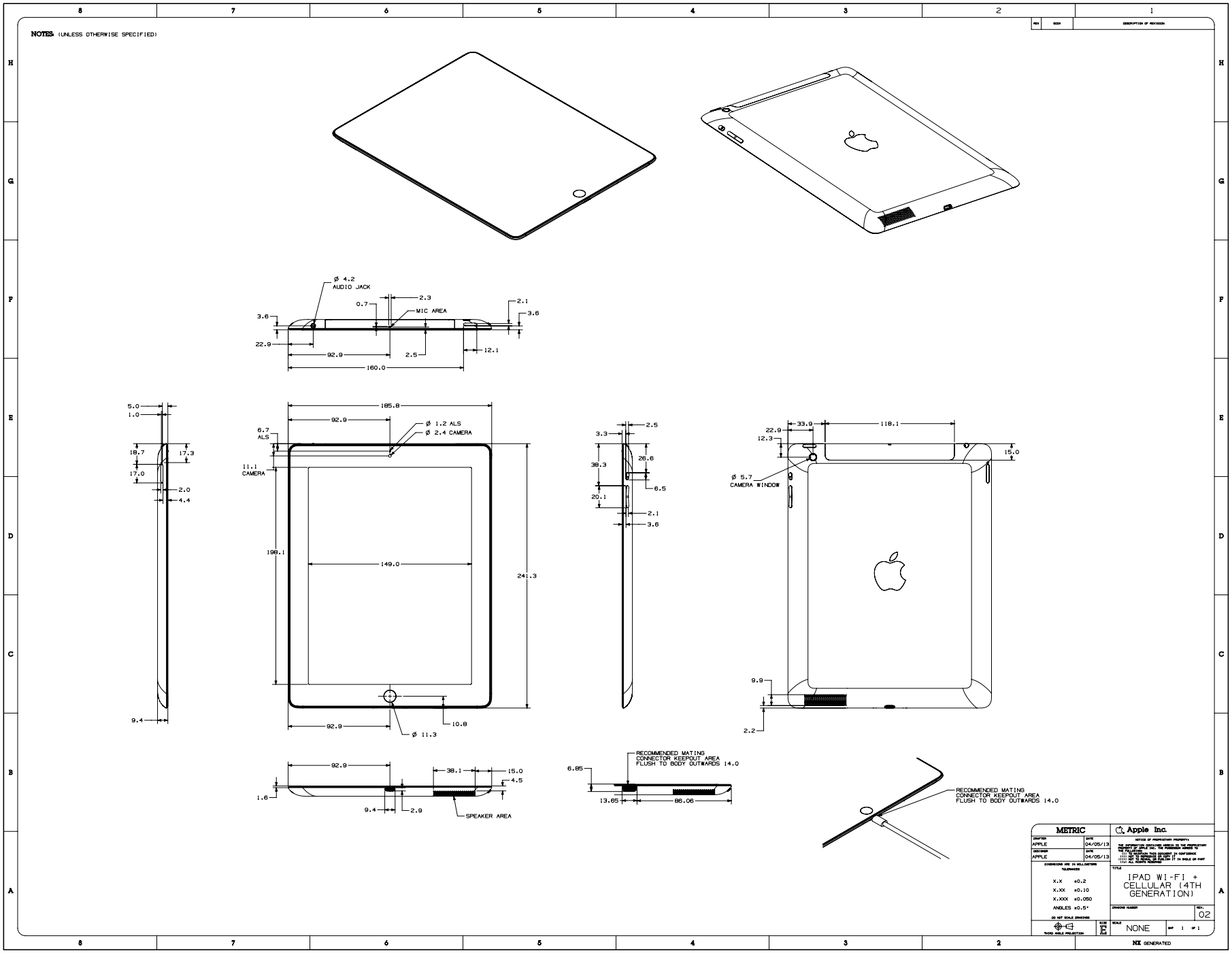

Copyright © 2022 Apple Inc. All Rights Reserved.

45.121 iPod touch (6th generation) and iPod touch (7th generation)

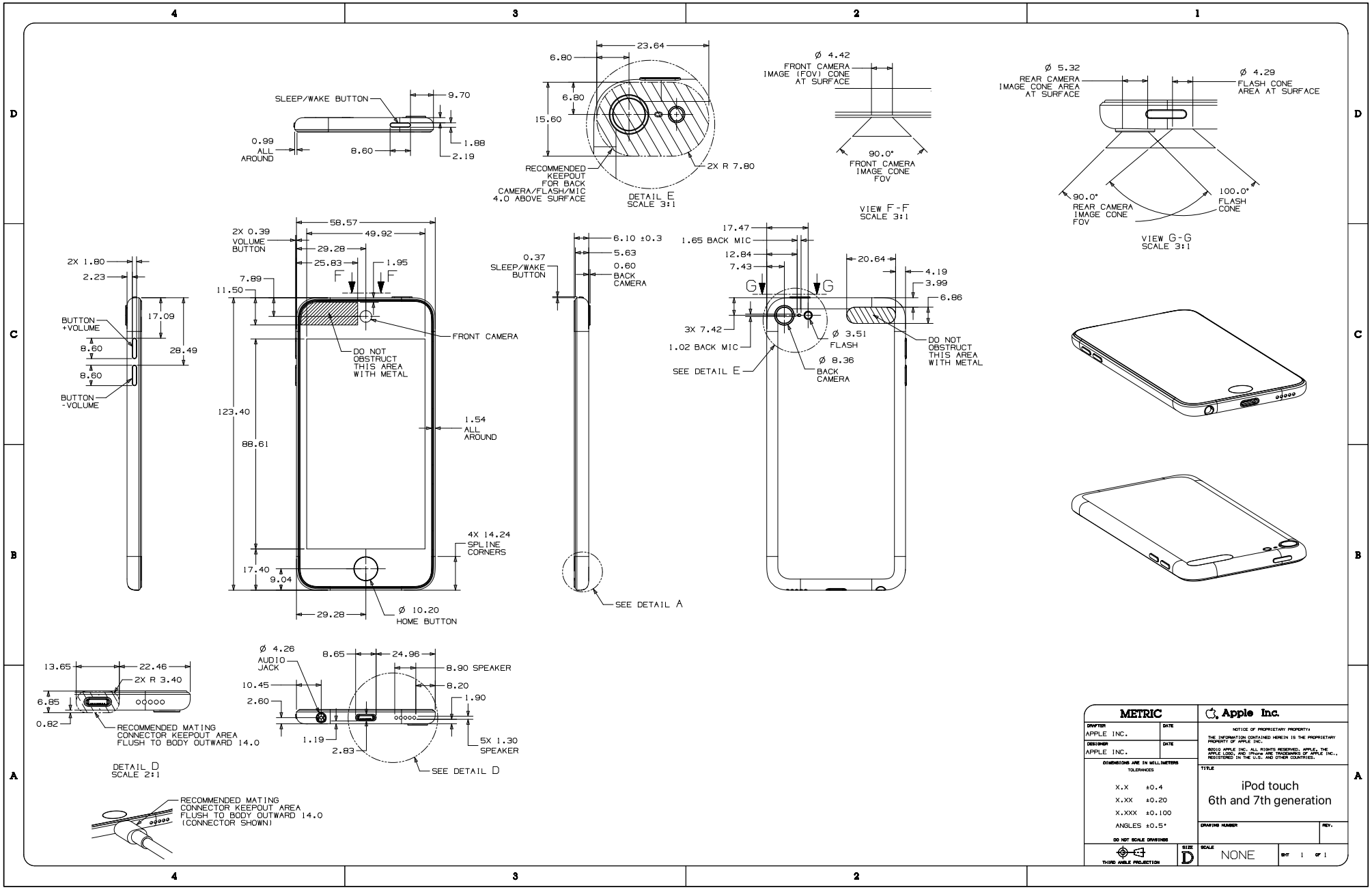

45.122 iPod touch (5th generation)

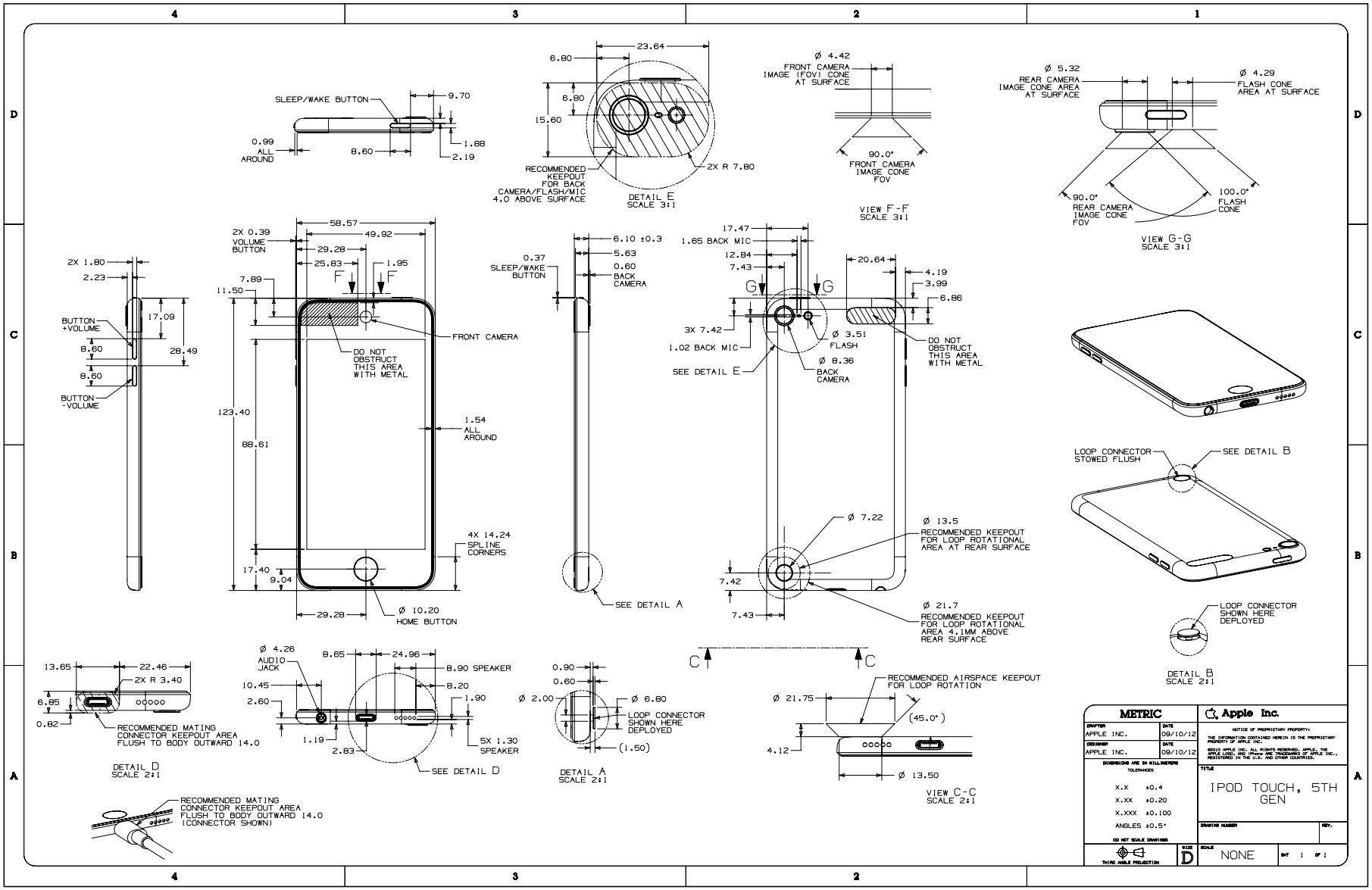

Copyright © 2022 Apple Inc. All Rights Reserved.

45.123 Apple Watch Series 7, 45 mm

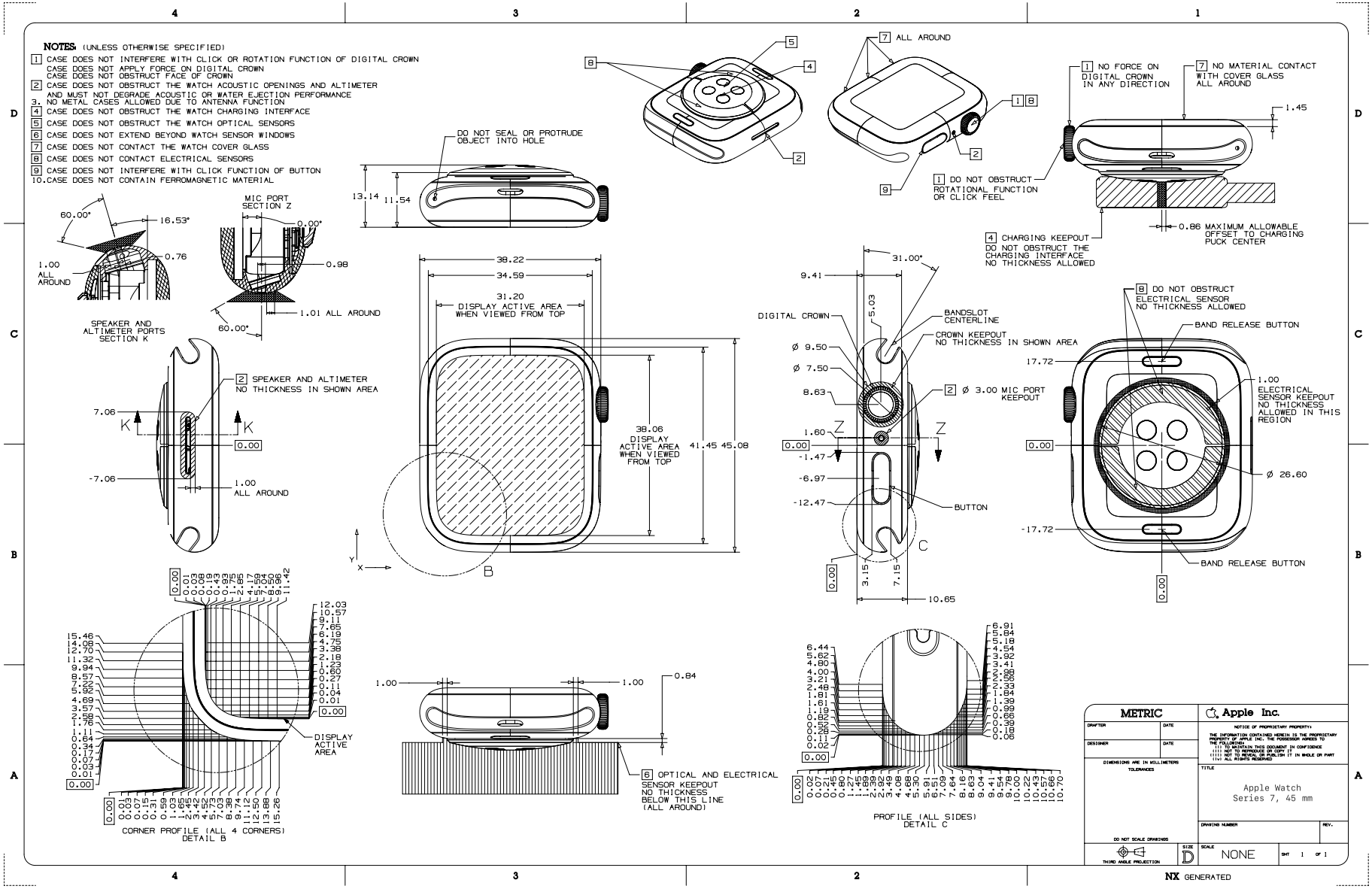

45.124 Apple Watch Series 7, 41 mm

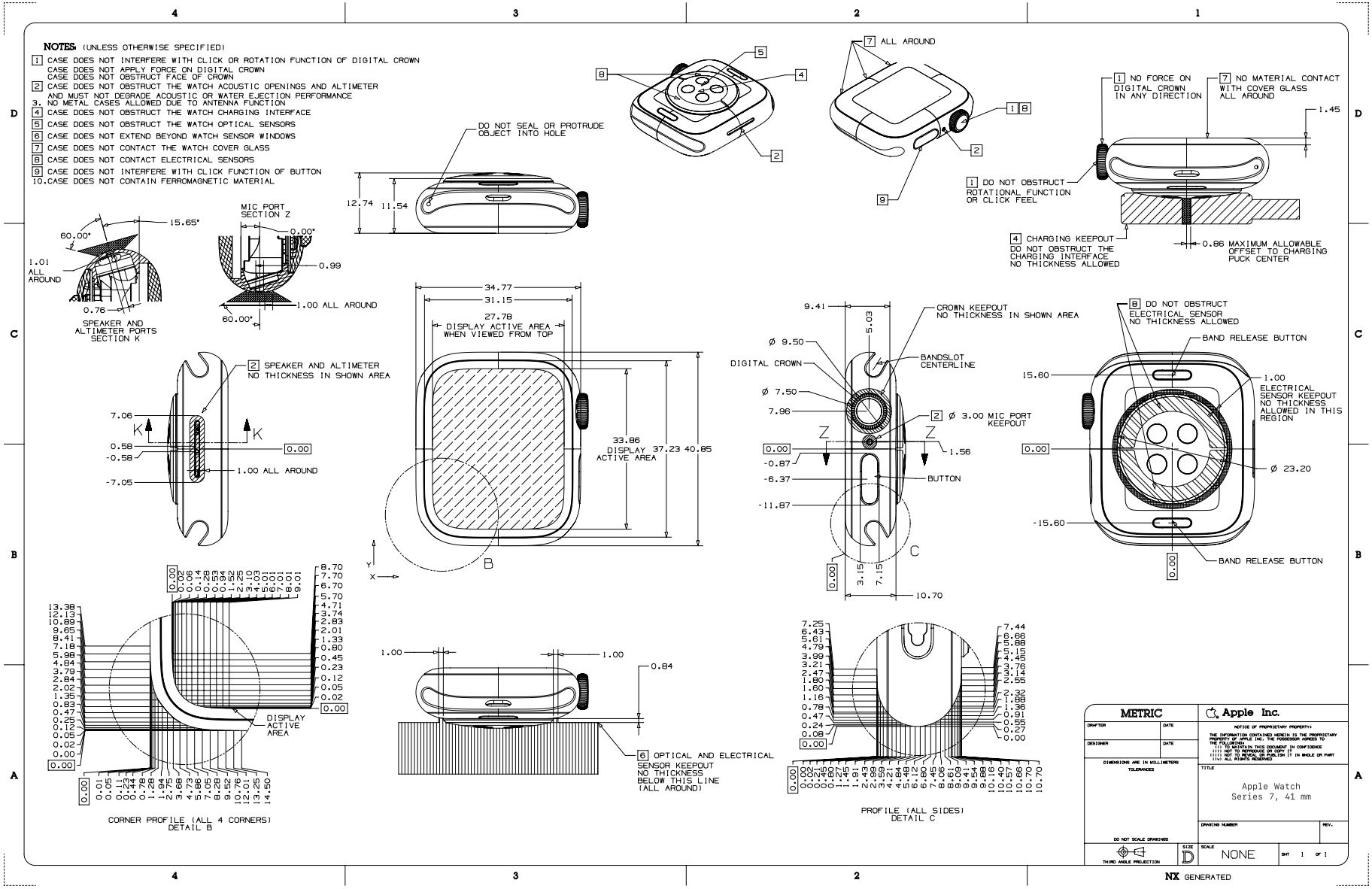

45.125 Apple Watch Series 6, 44 mm

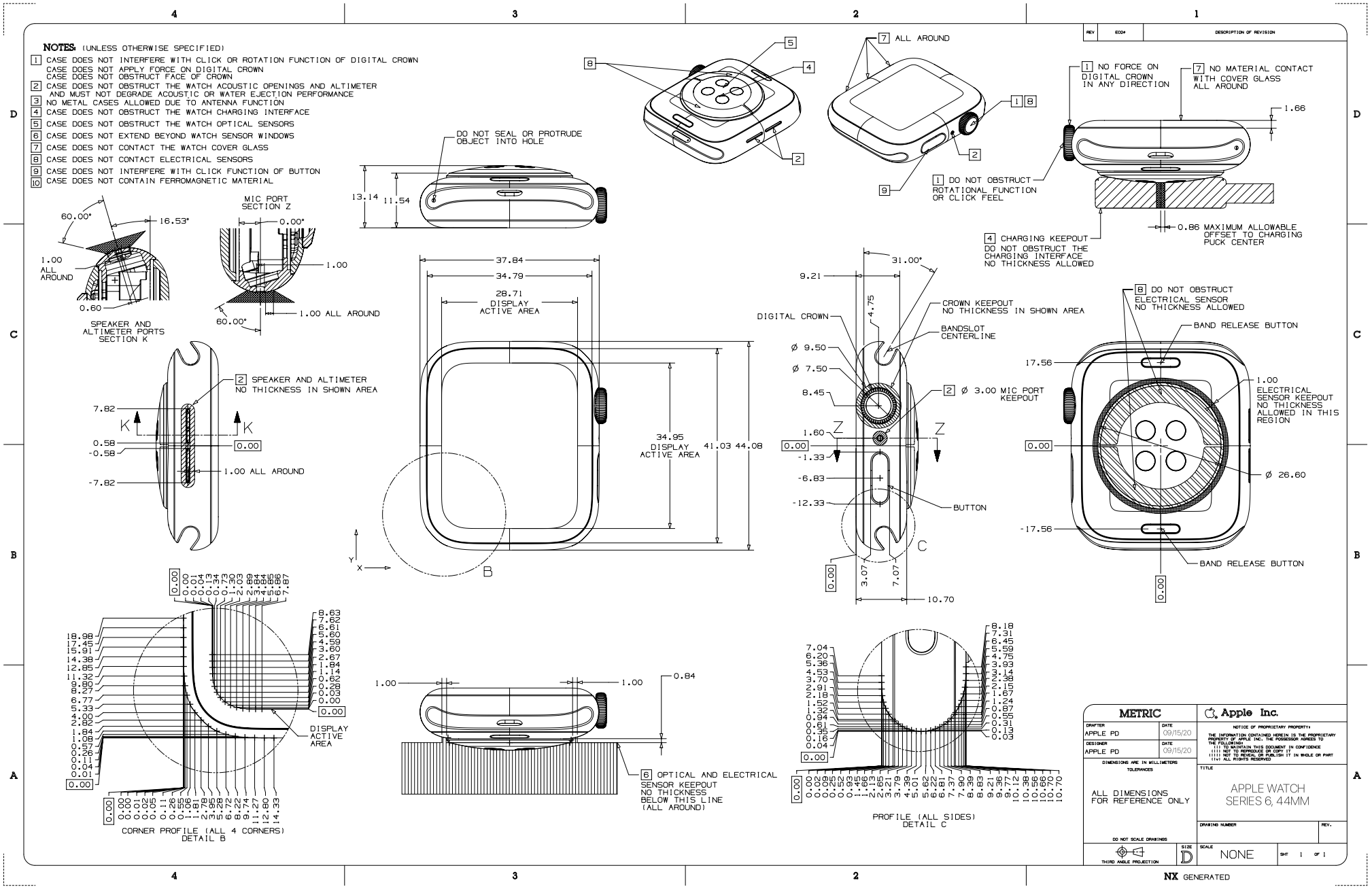

45.126 Apple Watch Series 6, 40 mm

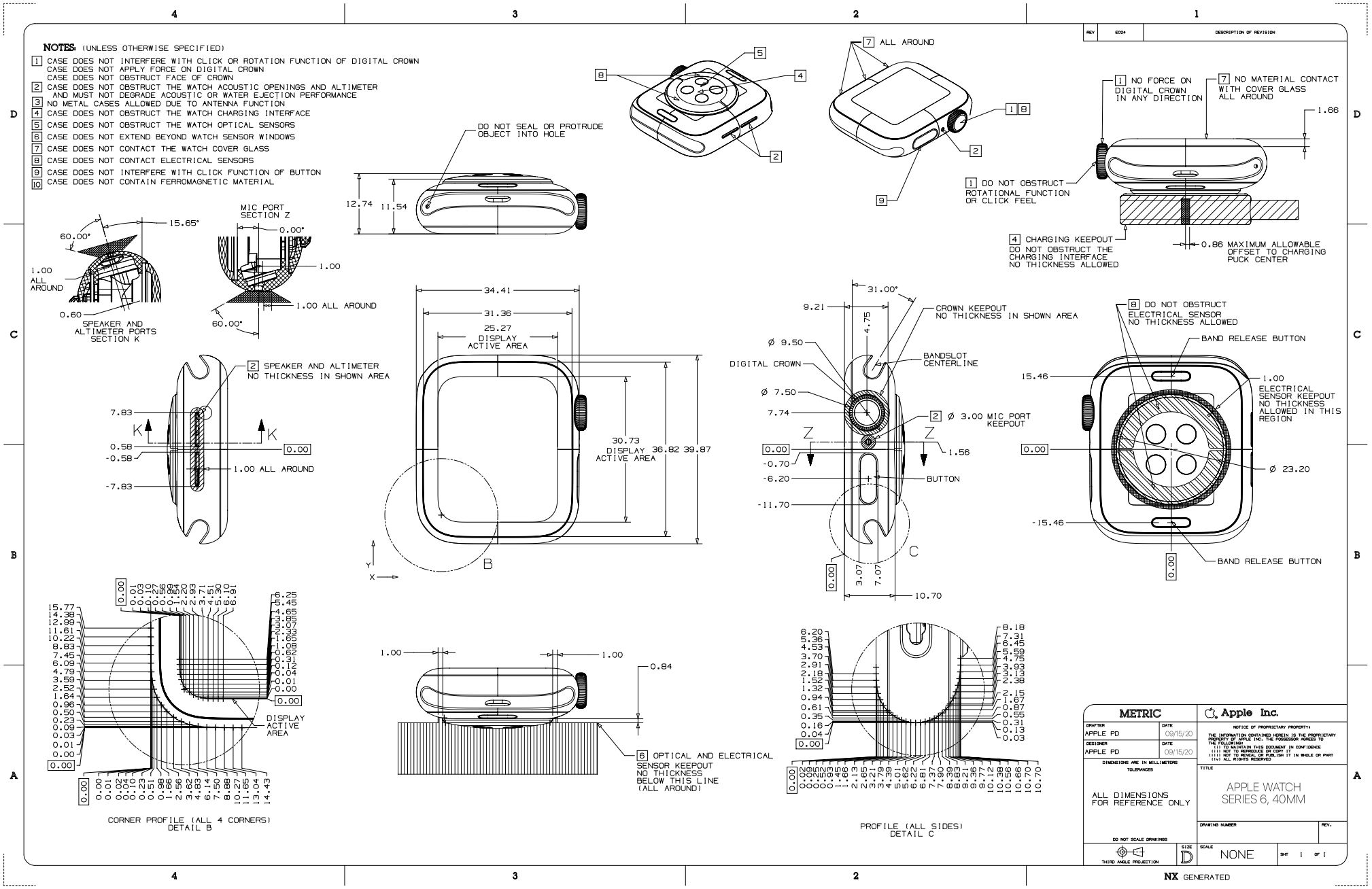

45.127 Apple Watch SE, 44 mm

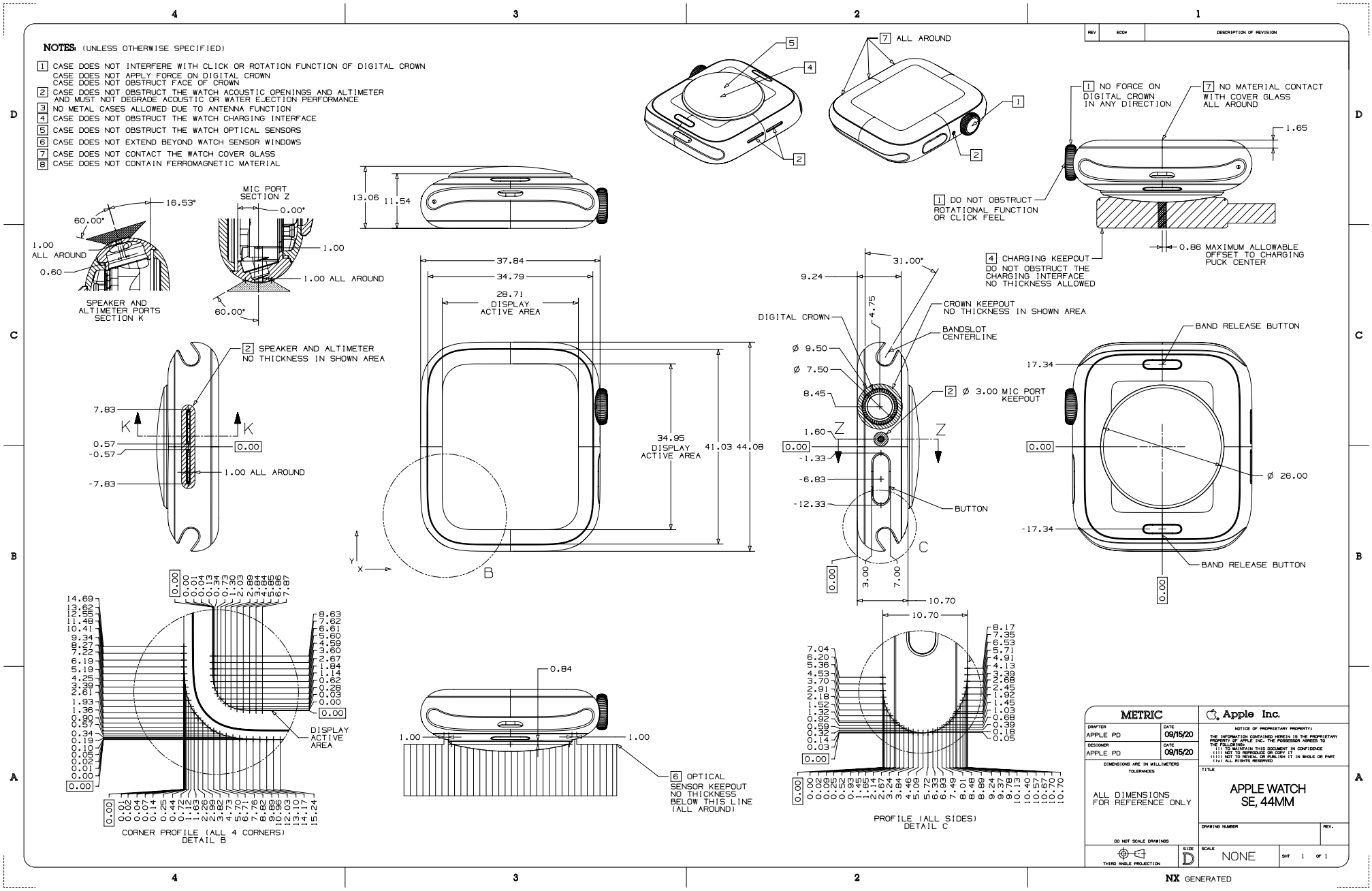

45.128 Apple Watch SE, 40 mm

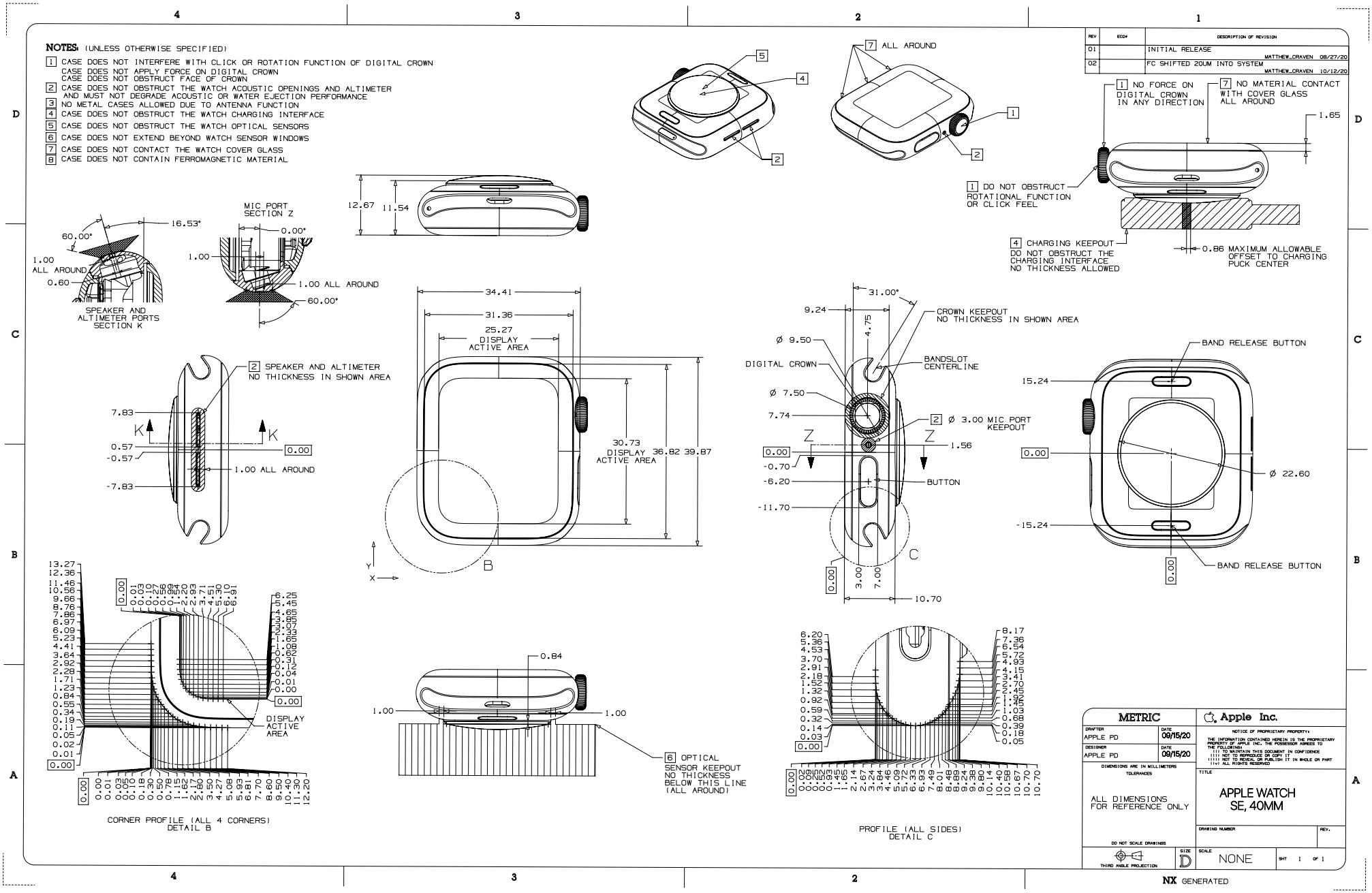

45.129 Apple Watch Series 5, 44 mm

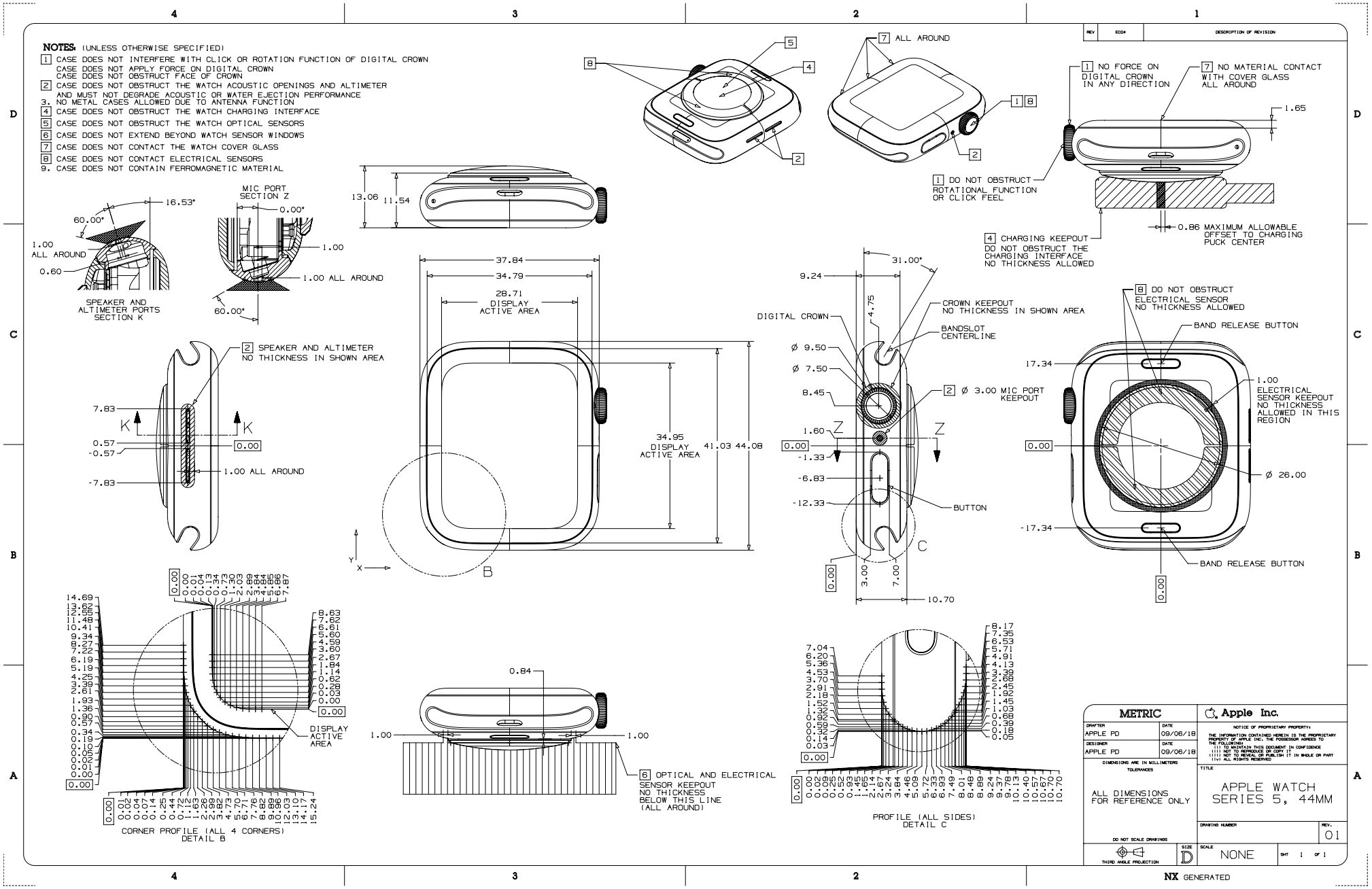

45.130 Apple Watch Series 5, 40 mm

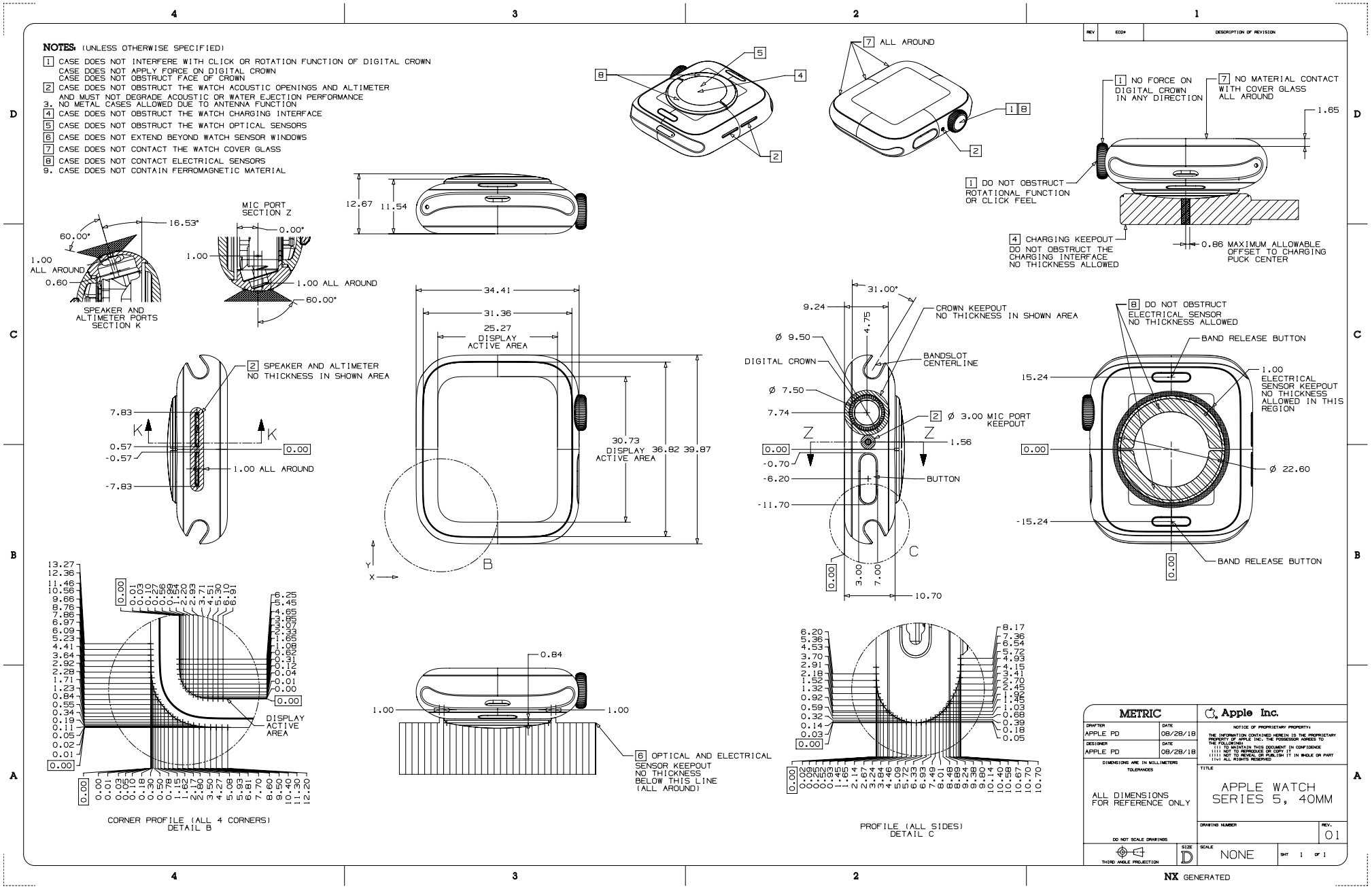

45.131 Apple Watch Series 5 Ceramic, 44 mm

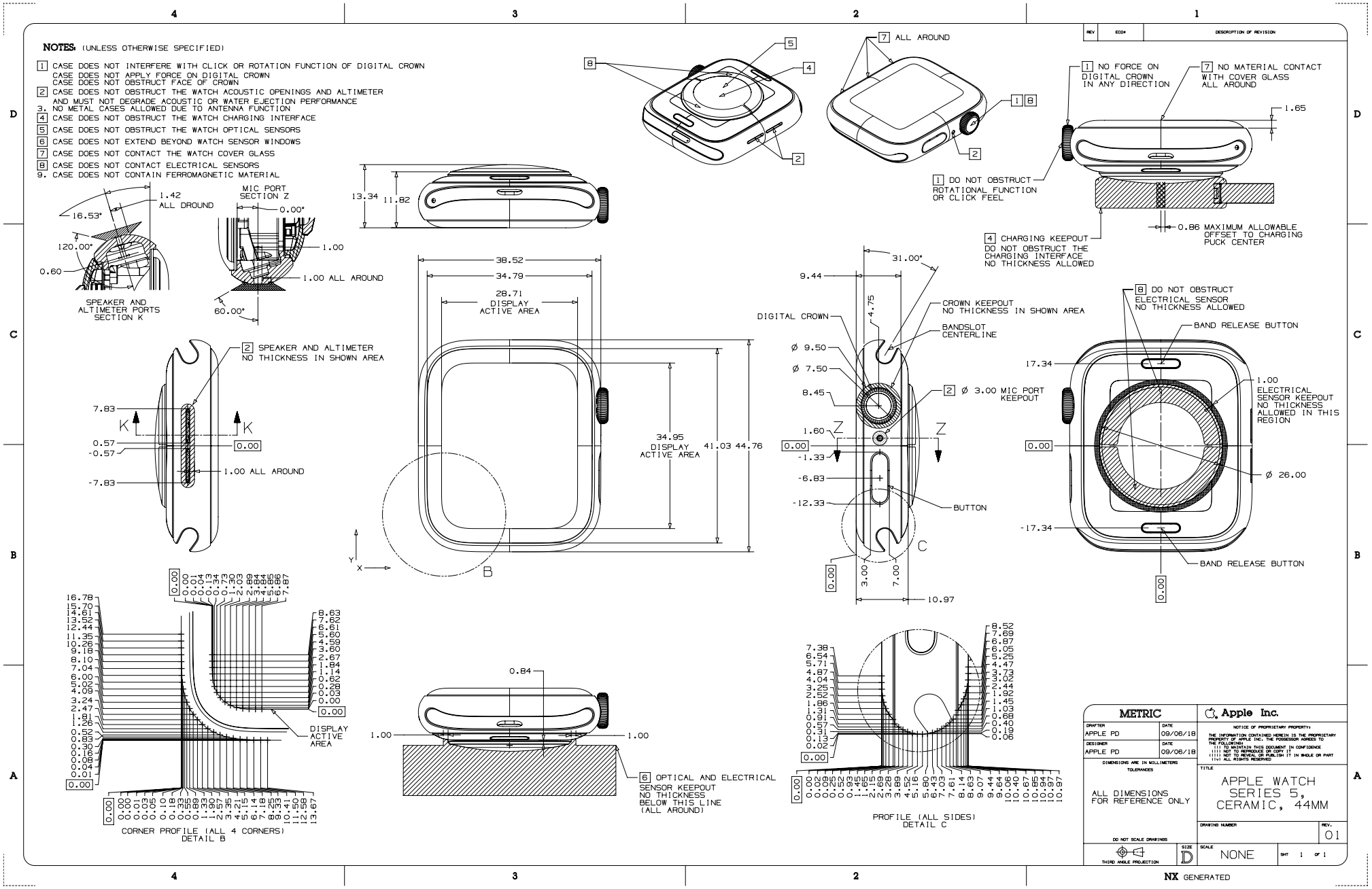

45.132 Apple Watch Series 5 Ceramic, 40 mm

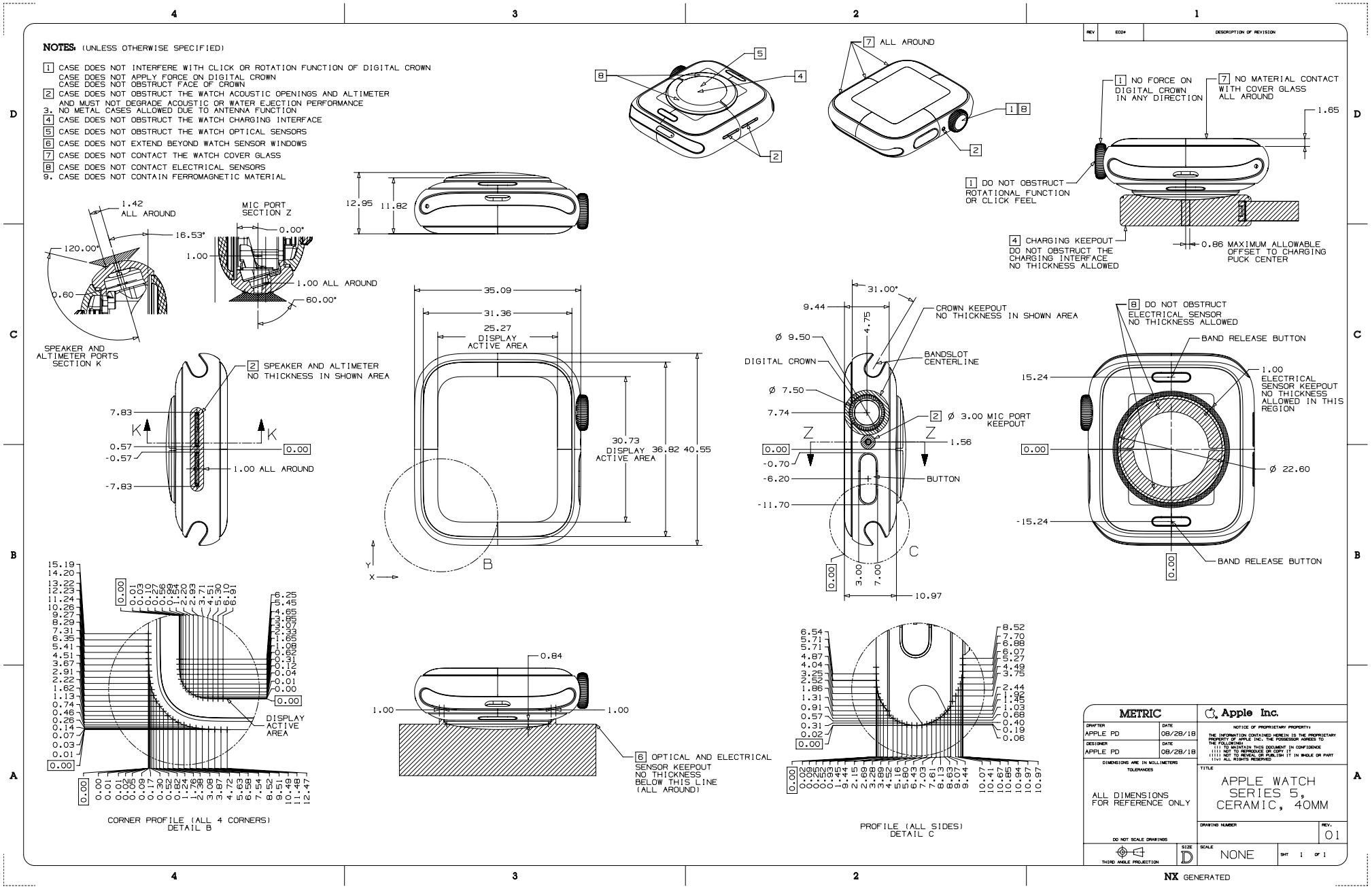

45.133 Apple Watch Series 4, 44 mm

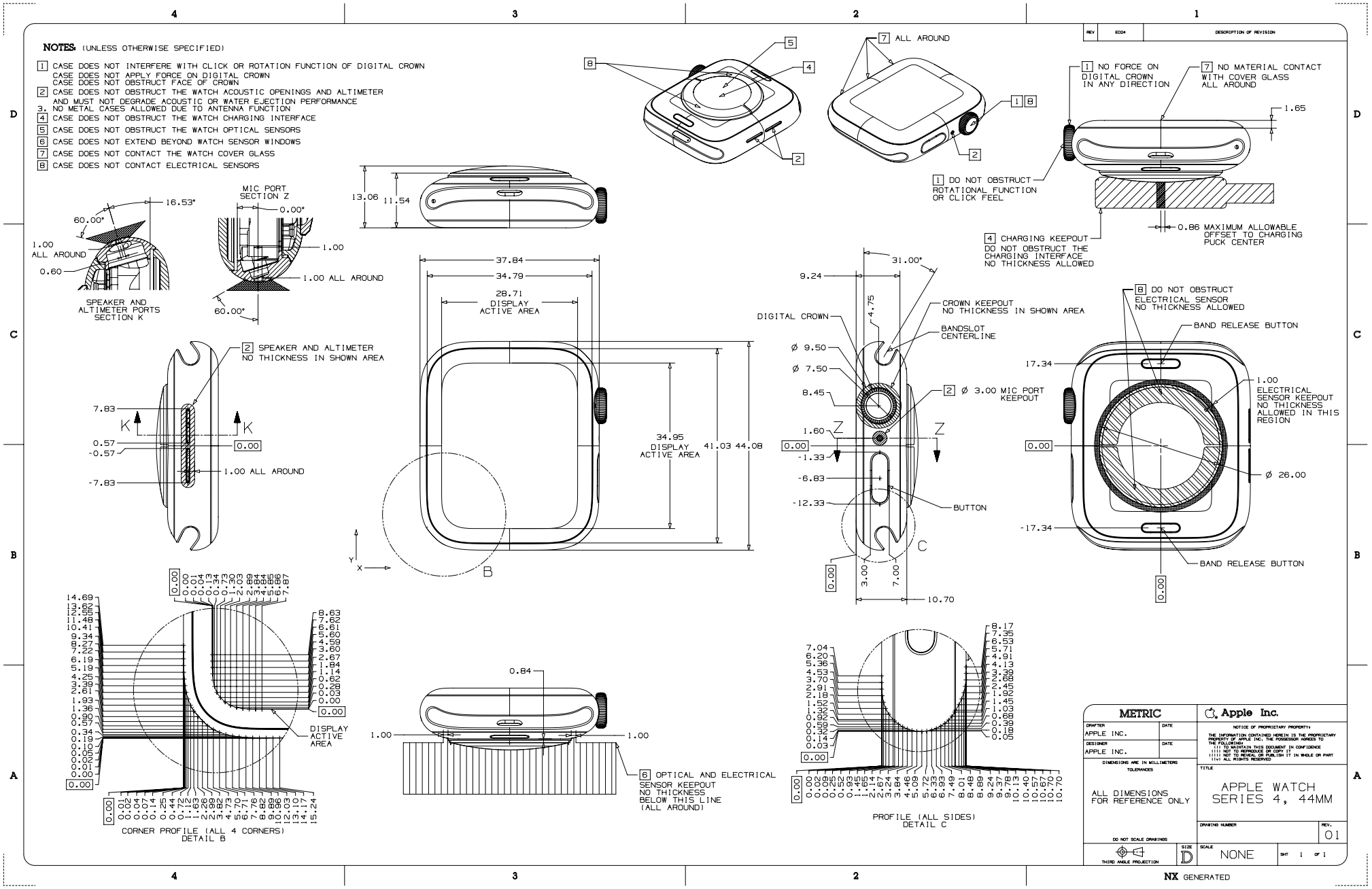

45.134 Apple Watch Series 4, 40 mm

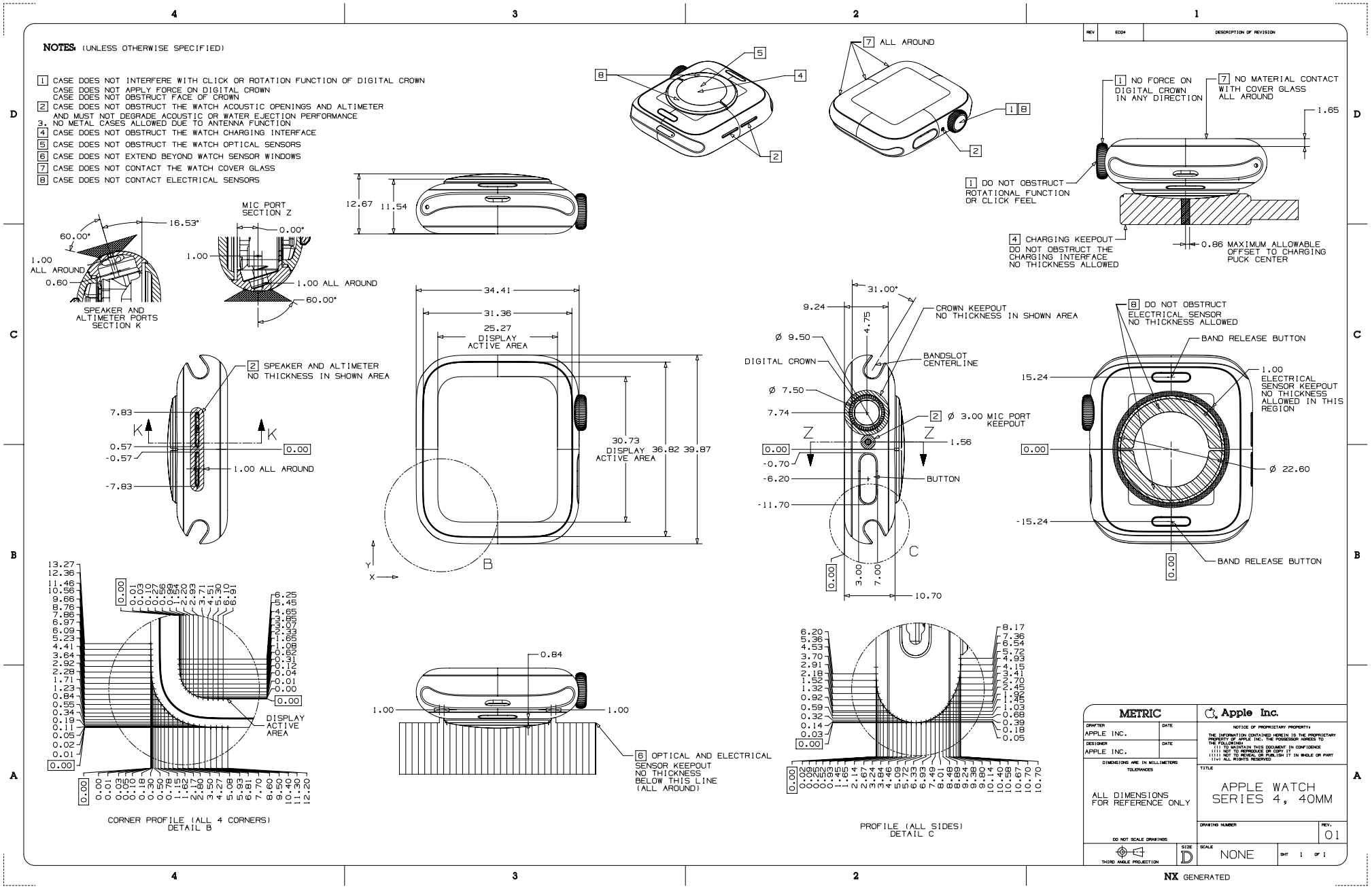

45.135 Apple Watch Series 3 Ceramic, 42 mm

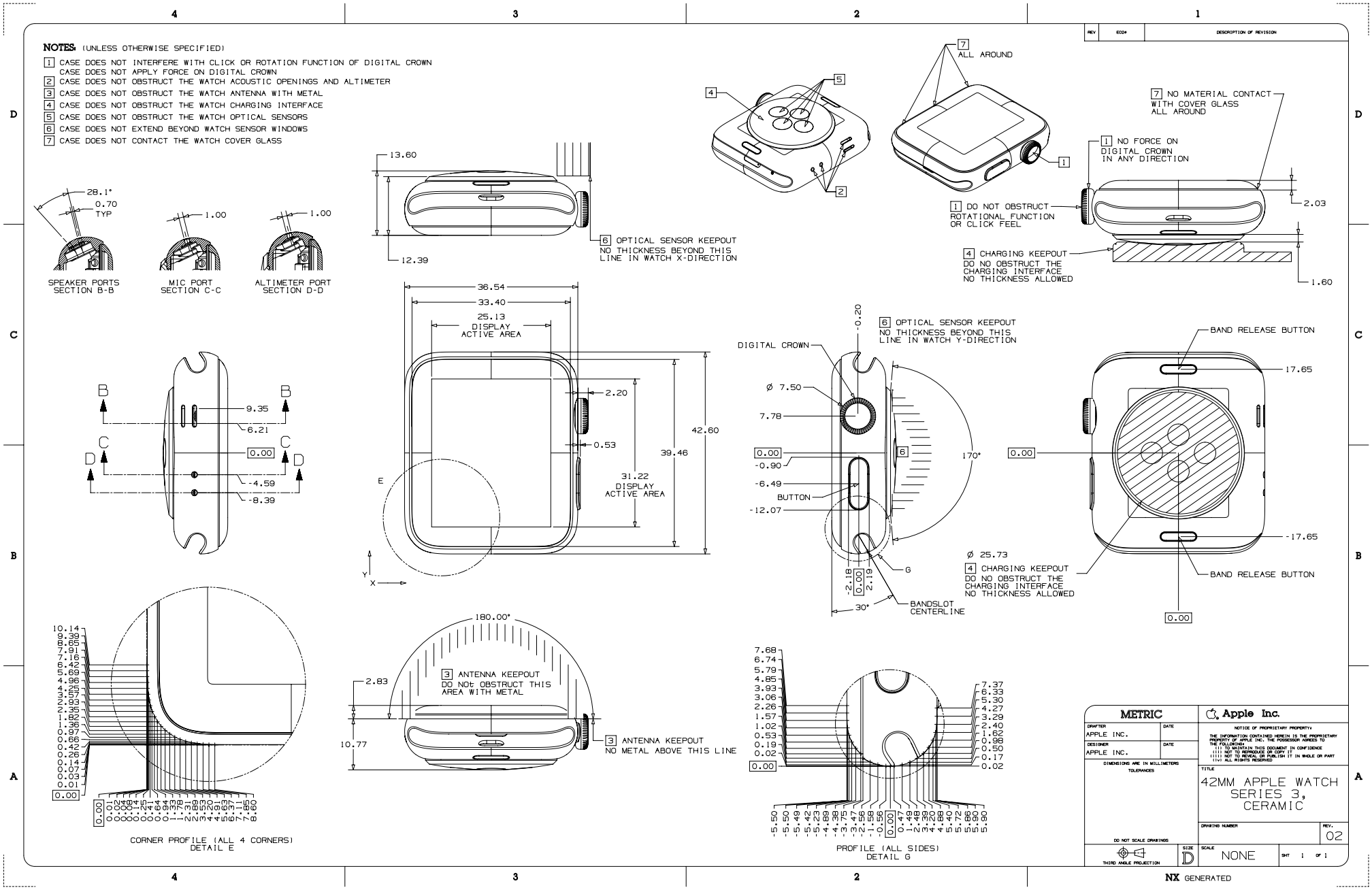

45.136 Apple Watch Series 3 Ceramic, 38 mm

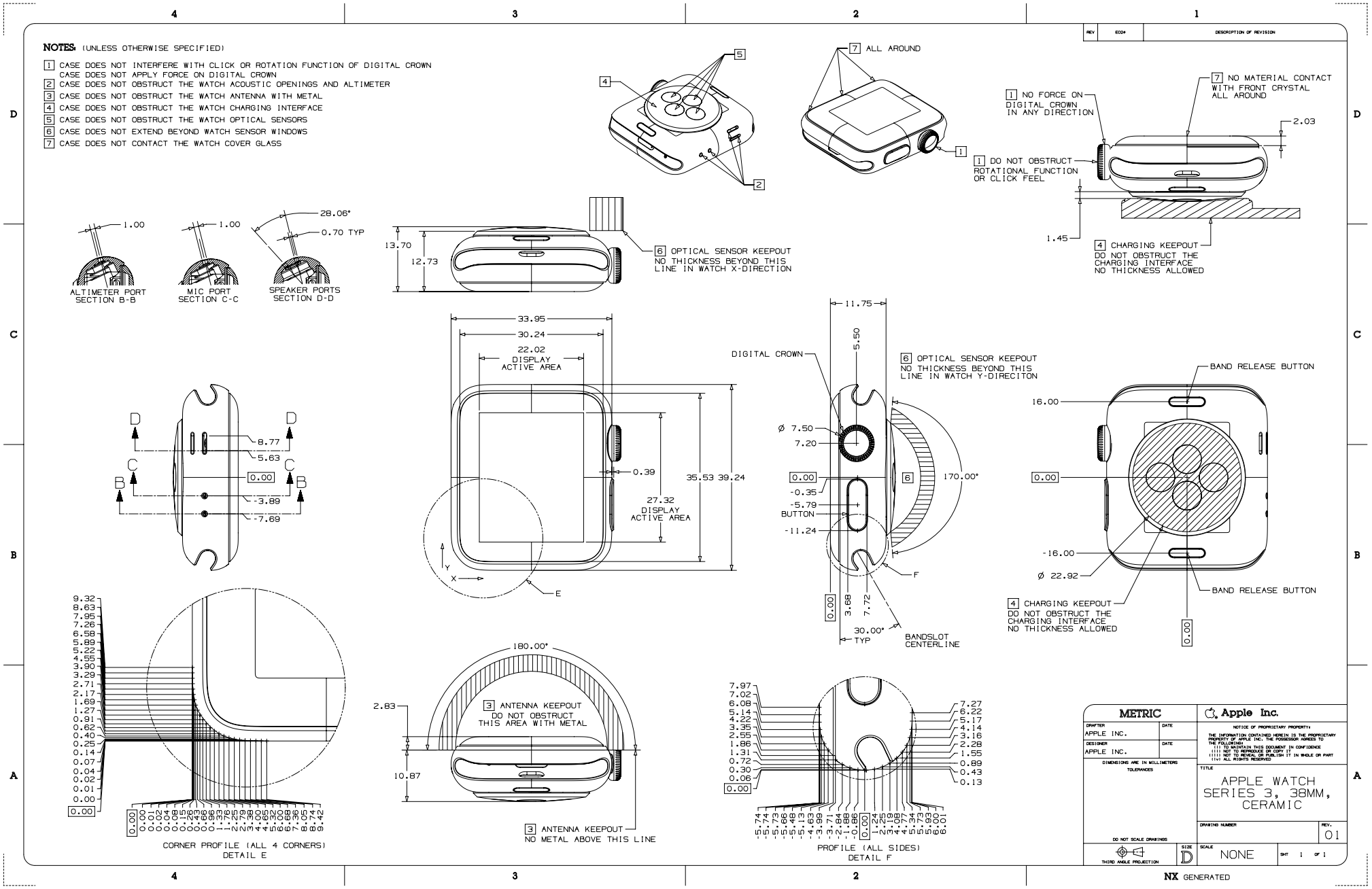

45.137 Apple Watch Series 3 Metal, 42 mm

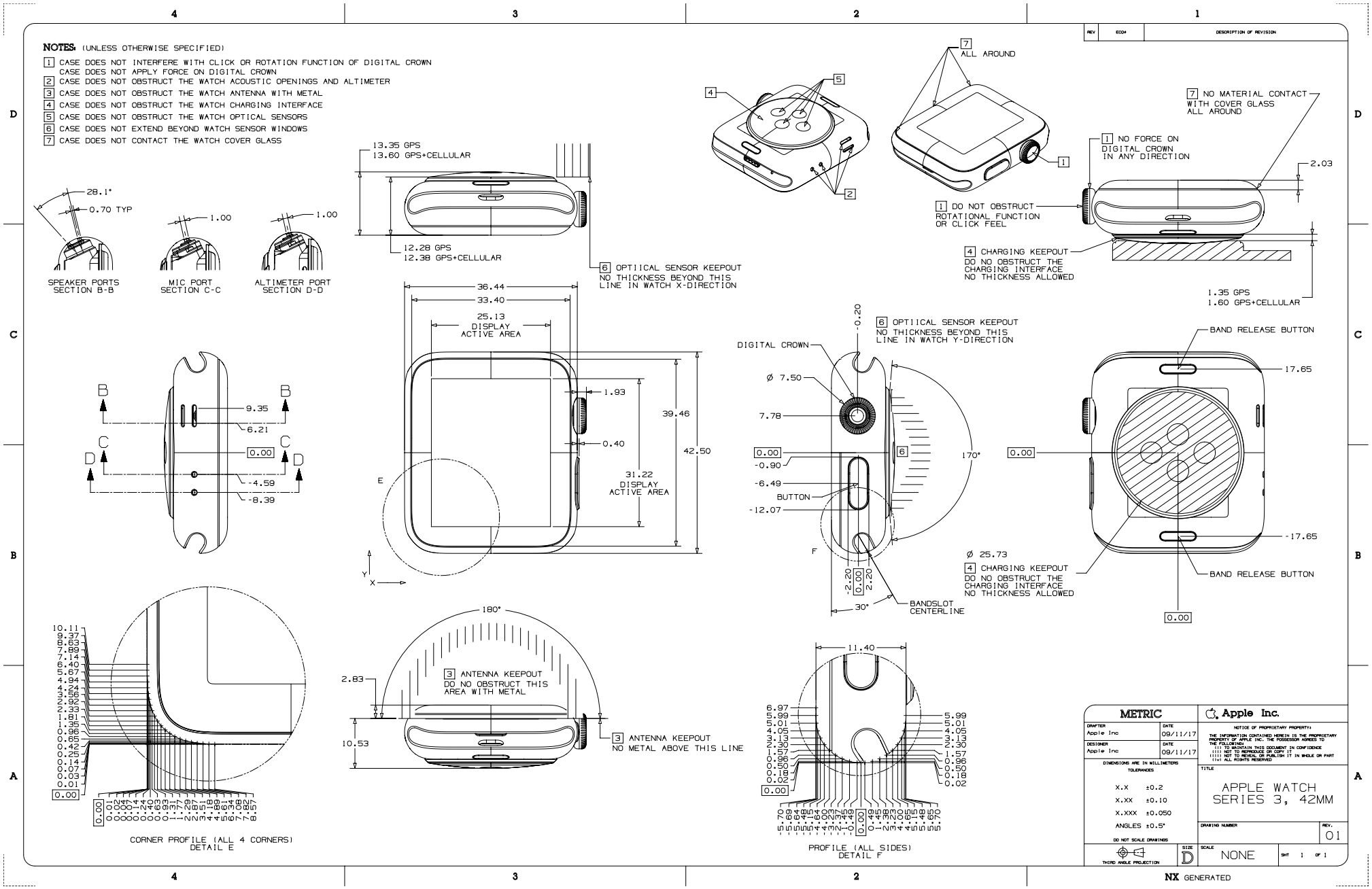

45.138 Apple Watch Series 3 Metal, 38 mm

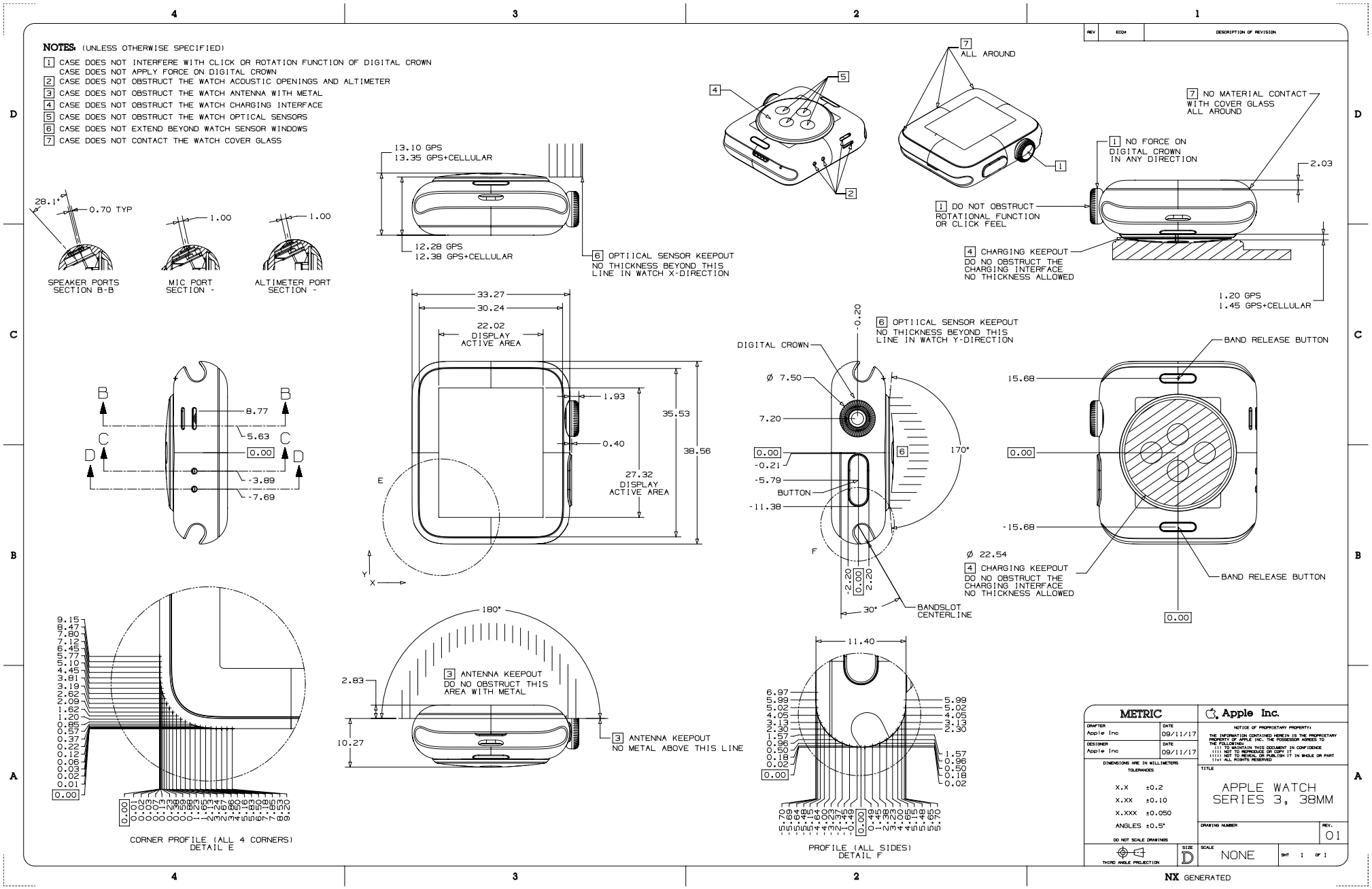

45.139 Apple Watch Series 2 Ceramic, 42 mm

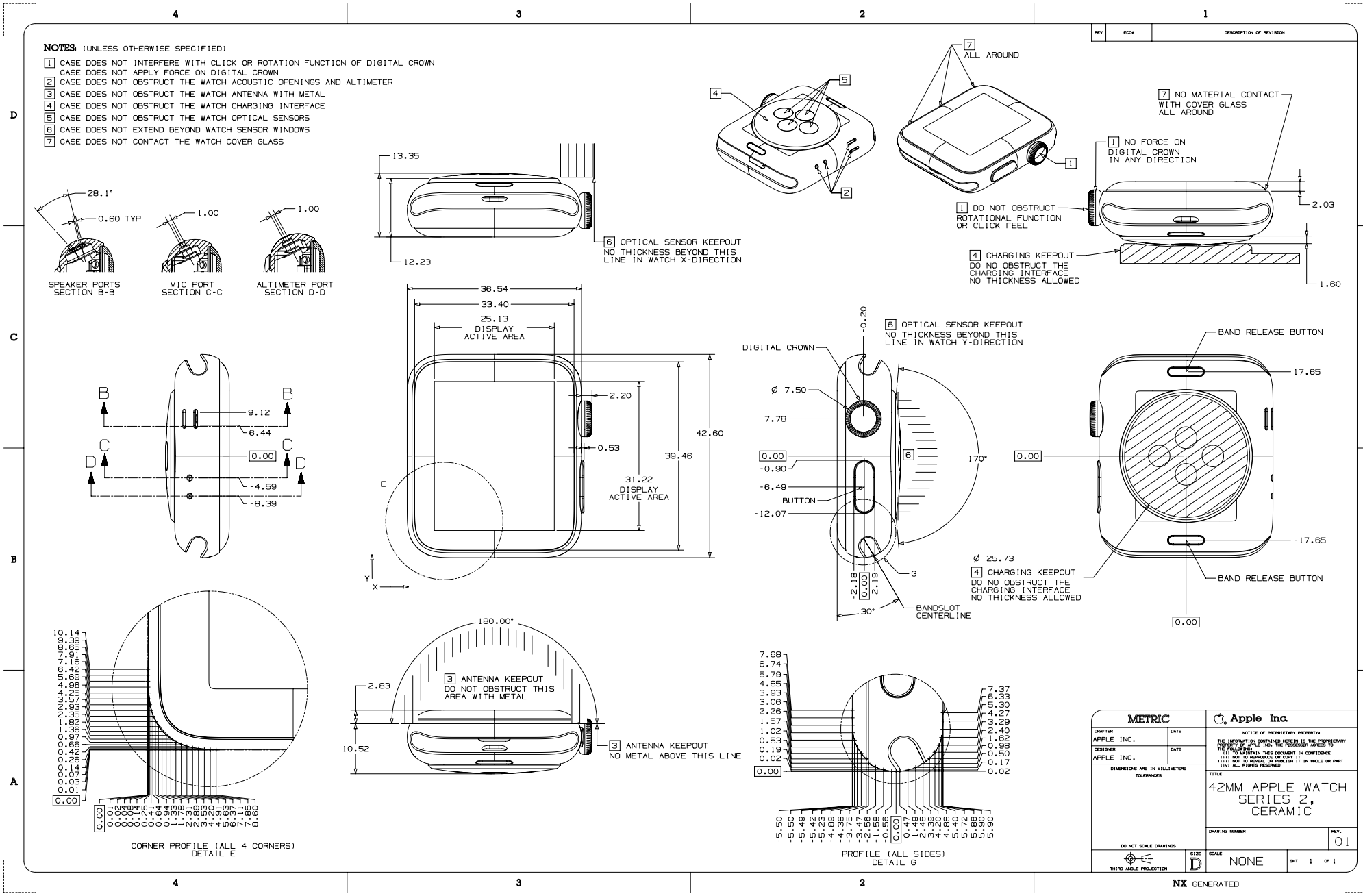

45.140 Apple Watch Series 2 Ceramic, 38 mm

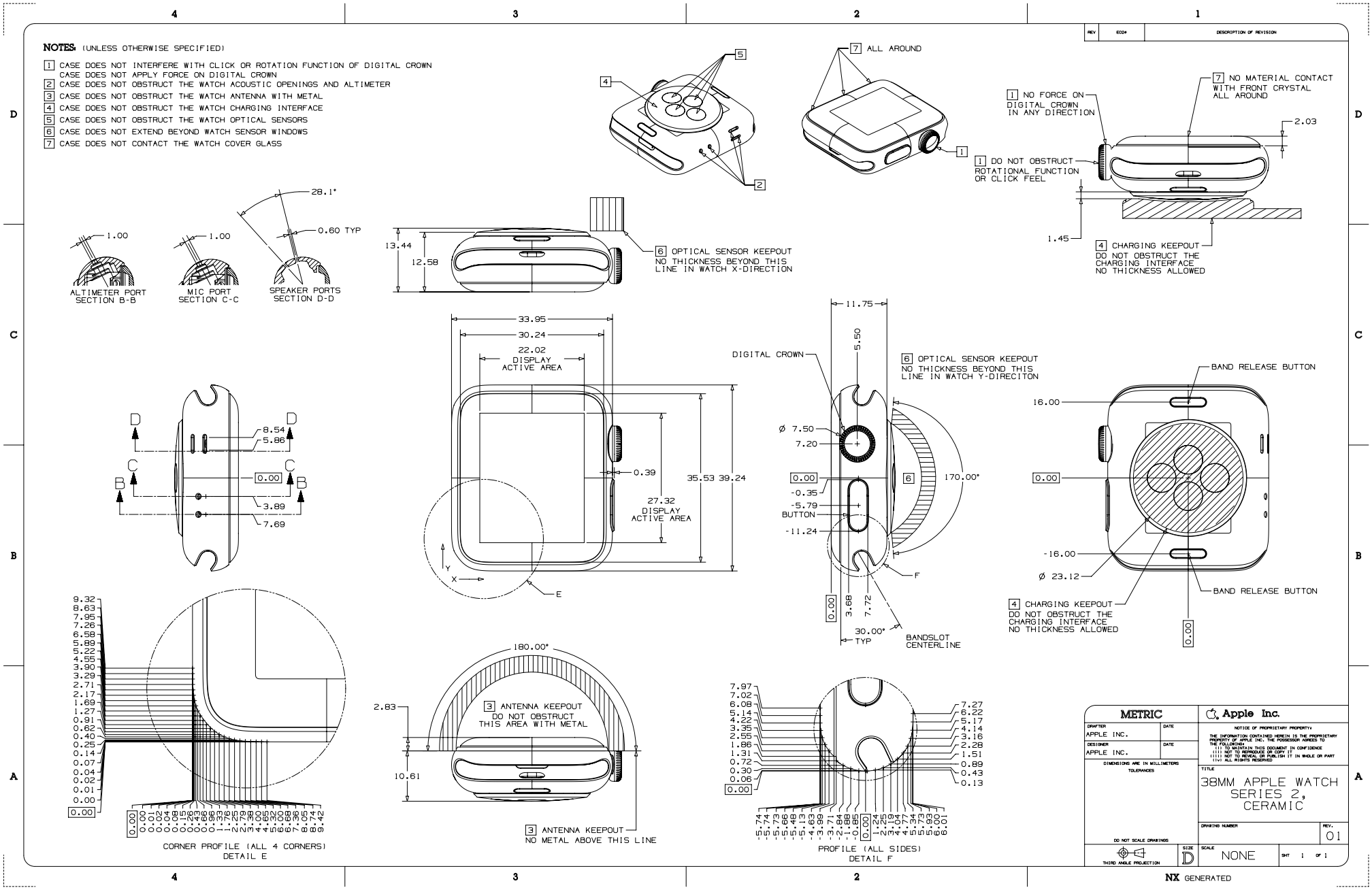

45.141 Apple Watch Series 2 Metal, 42 mm

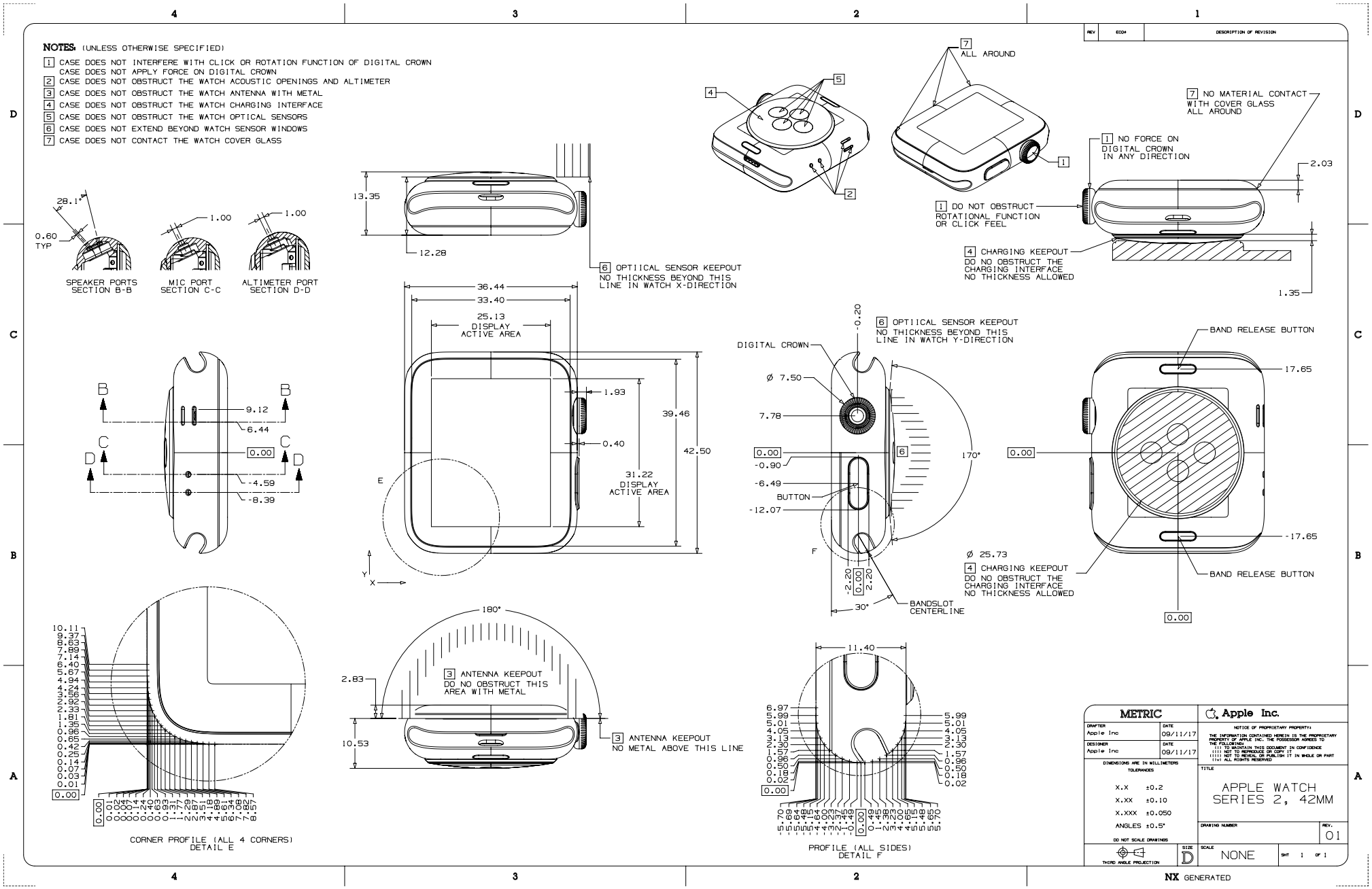

45.142 Apple Watch Series 2 Metal, 38 mm

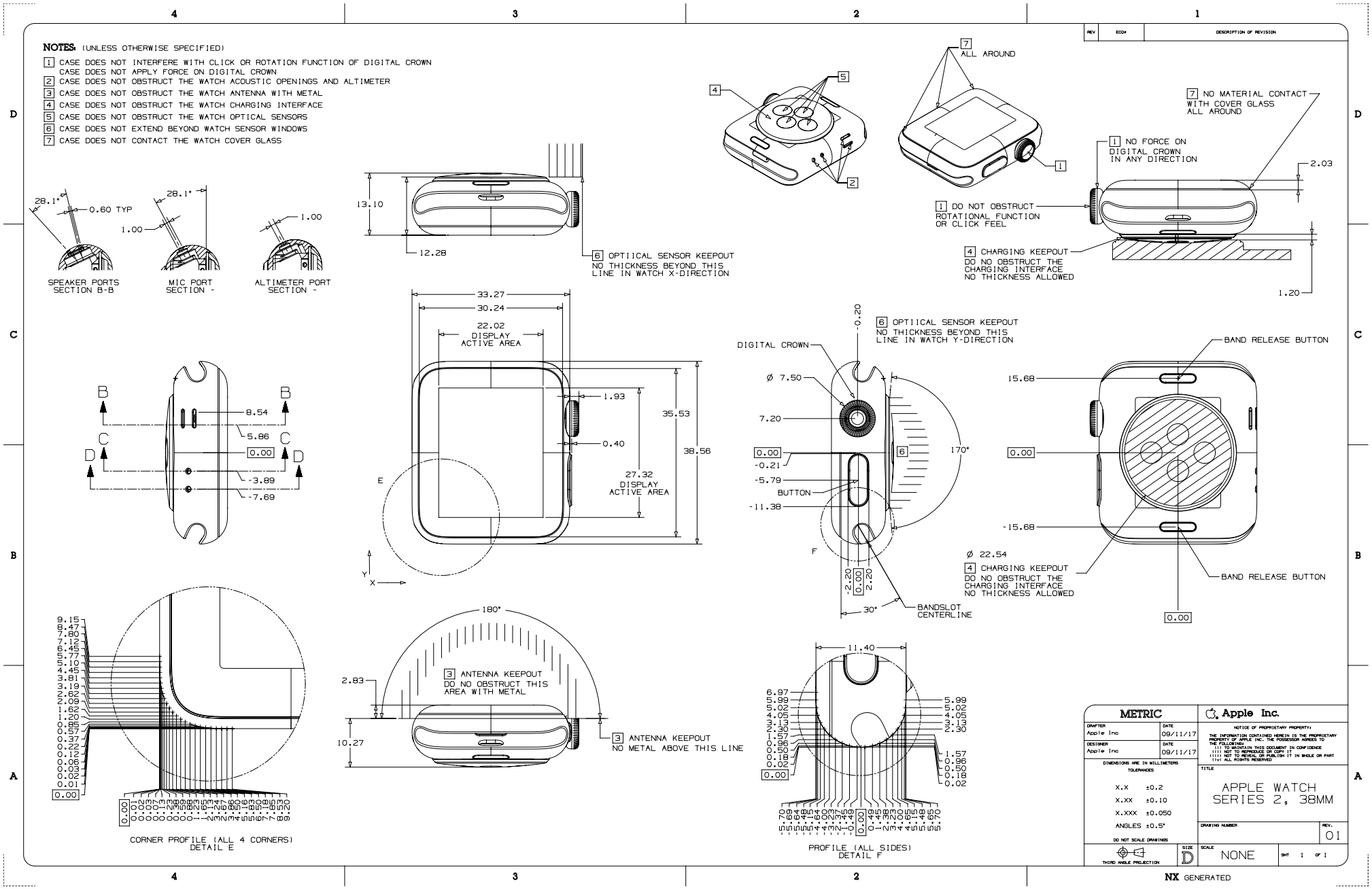

45.143 Apple Watch (1st generation) and Apple Watch Series 1, 42 mm

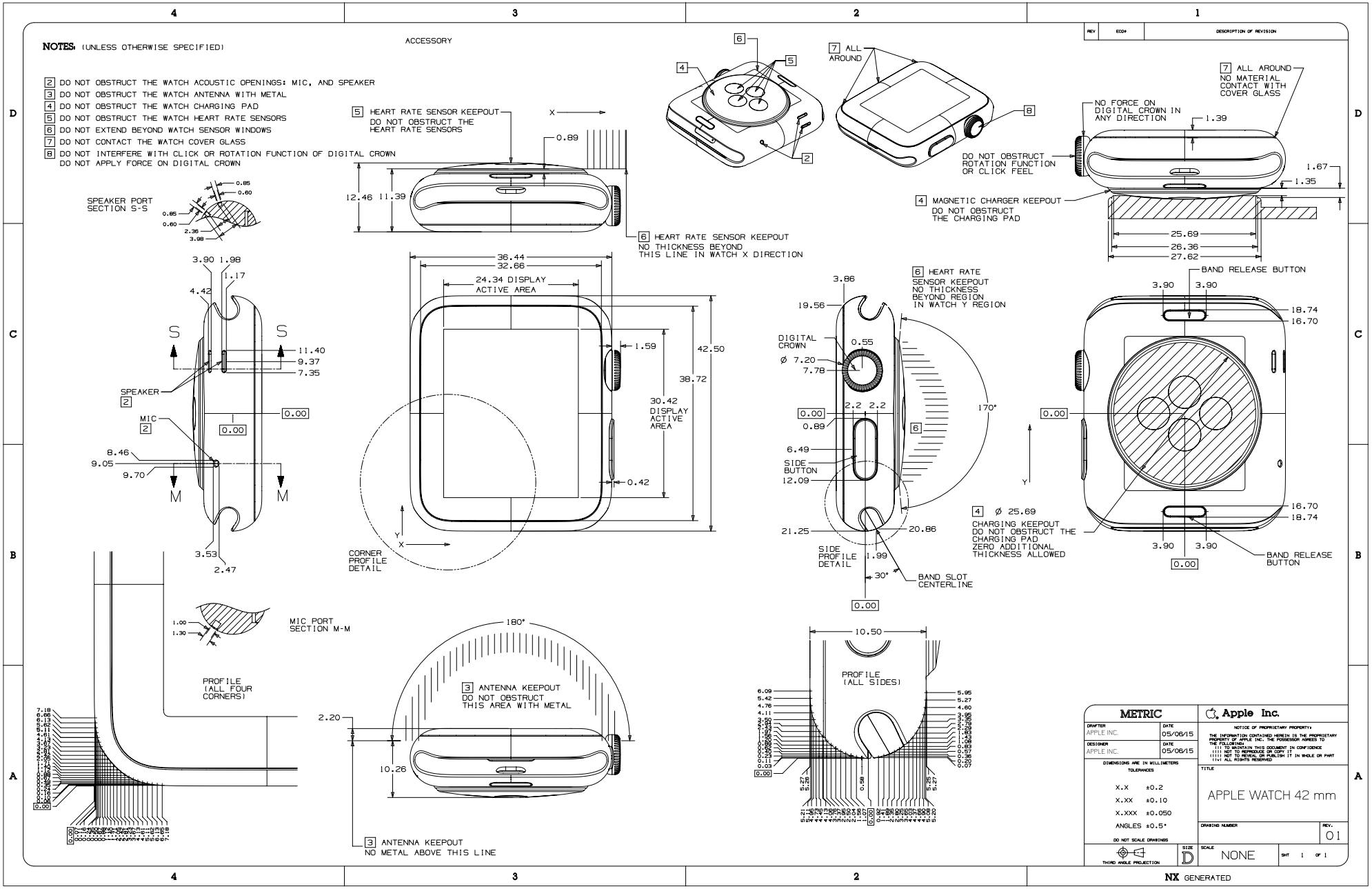

45.144 Apple Watch (1st generation) and Apple Watch Series 1, 38 mm

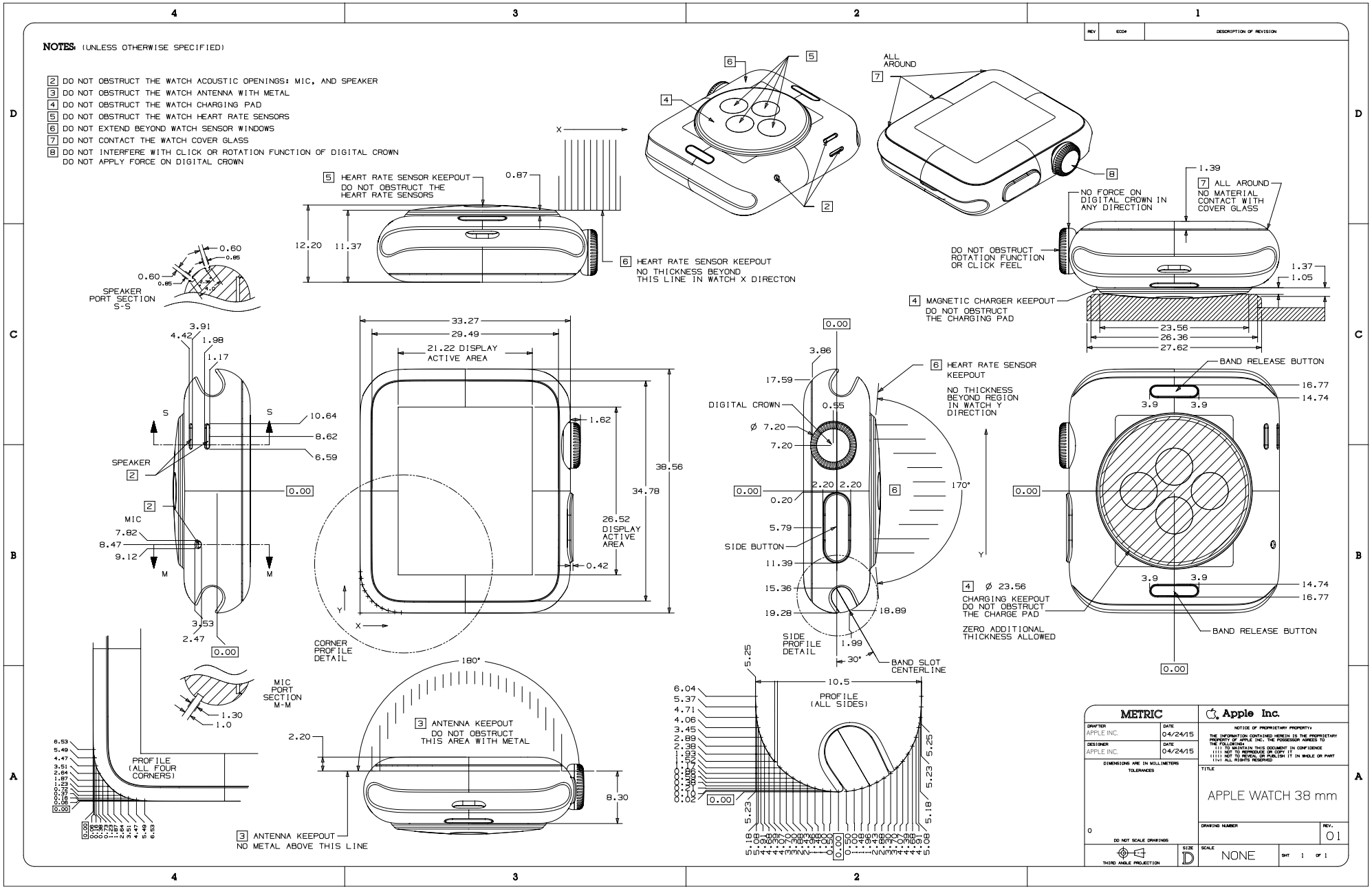

45.145 AirPods (3rd generation) MagSafe Charging Case

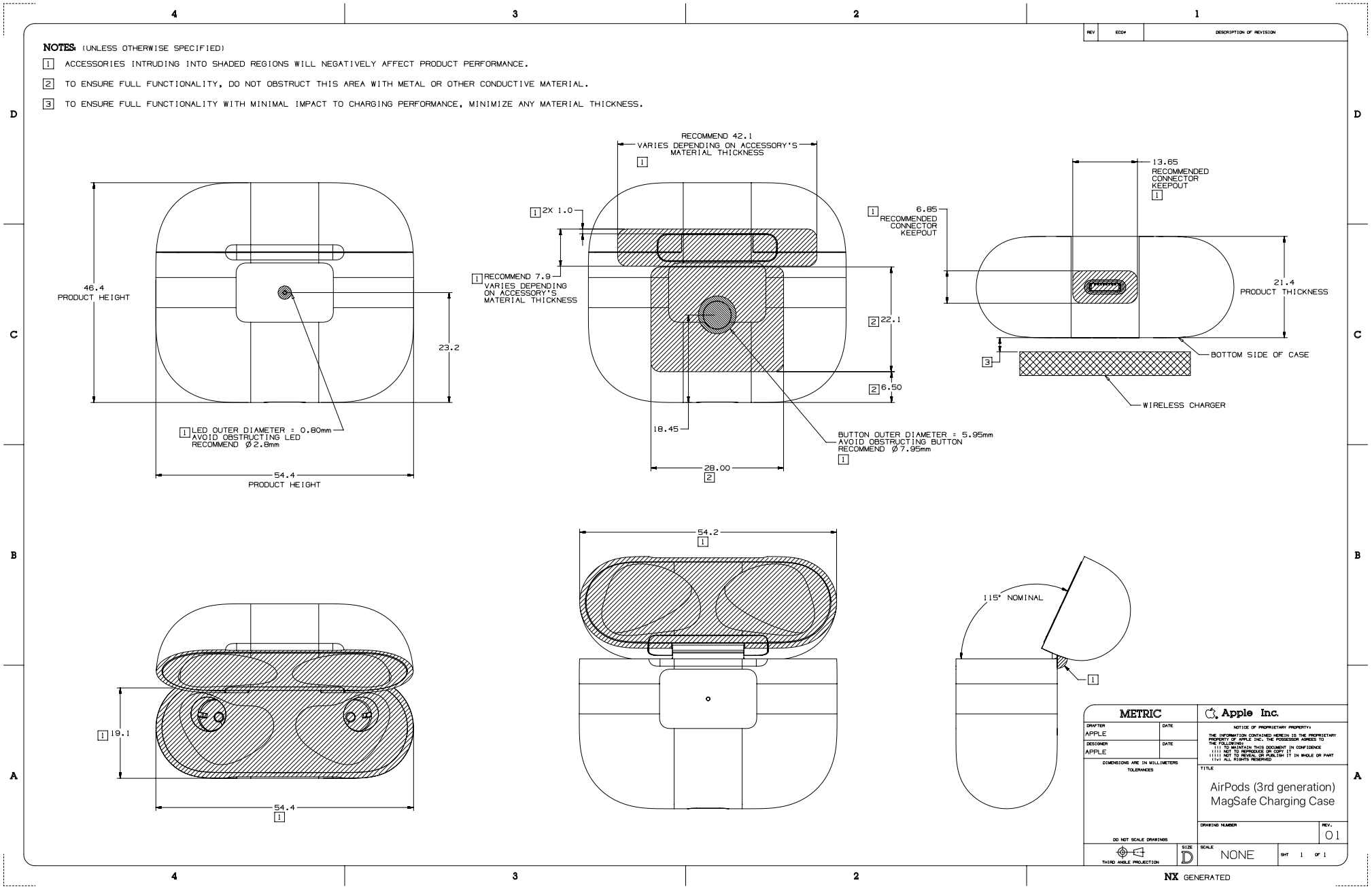

45.146 AirPods Pro Wireless Charging Case

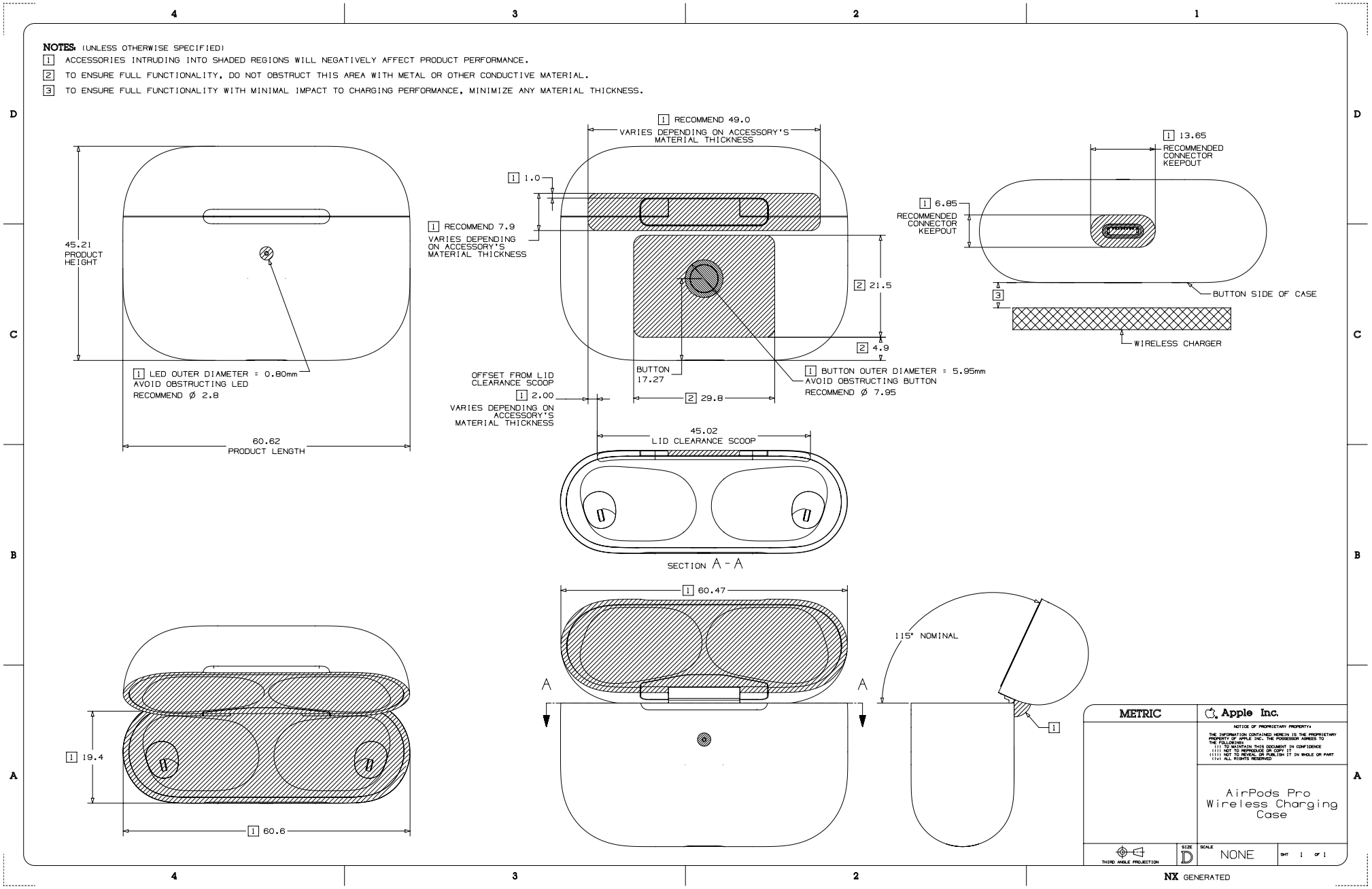

45.147 AirPods Wireless Charging Case

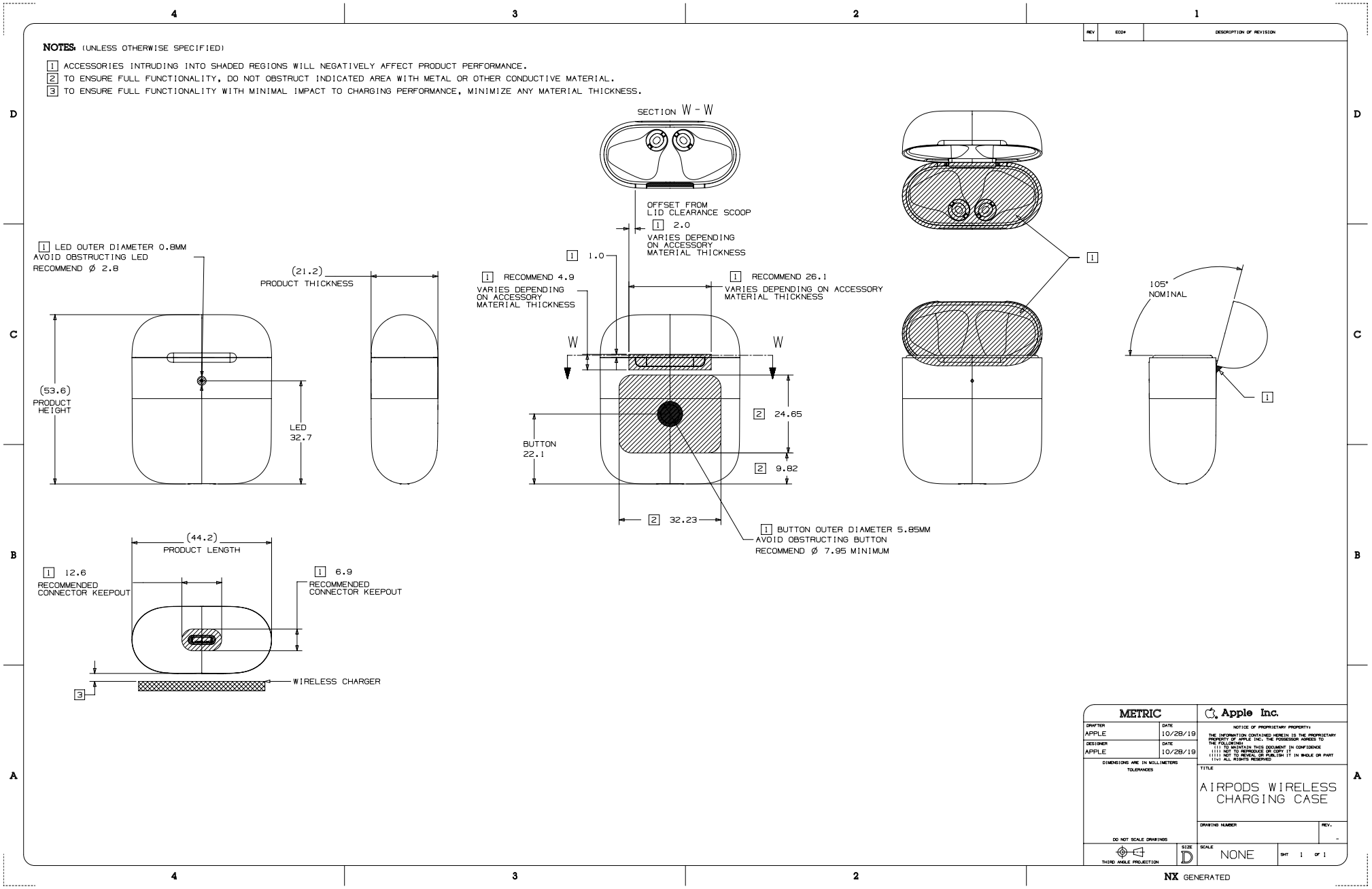

45.148 AirPods (3rd generation)

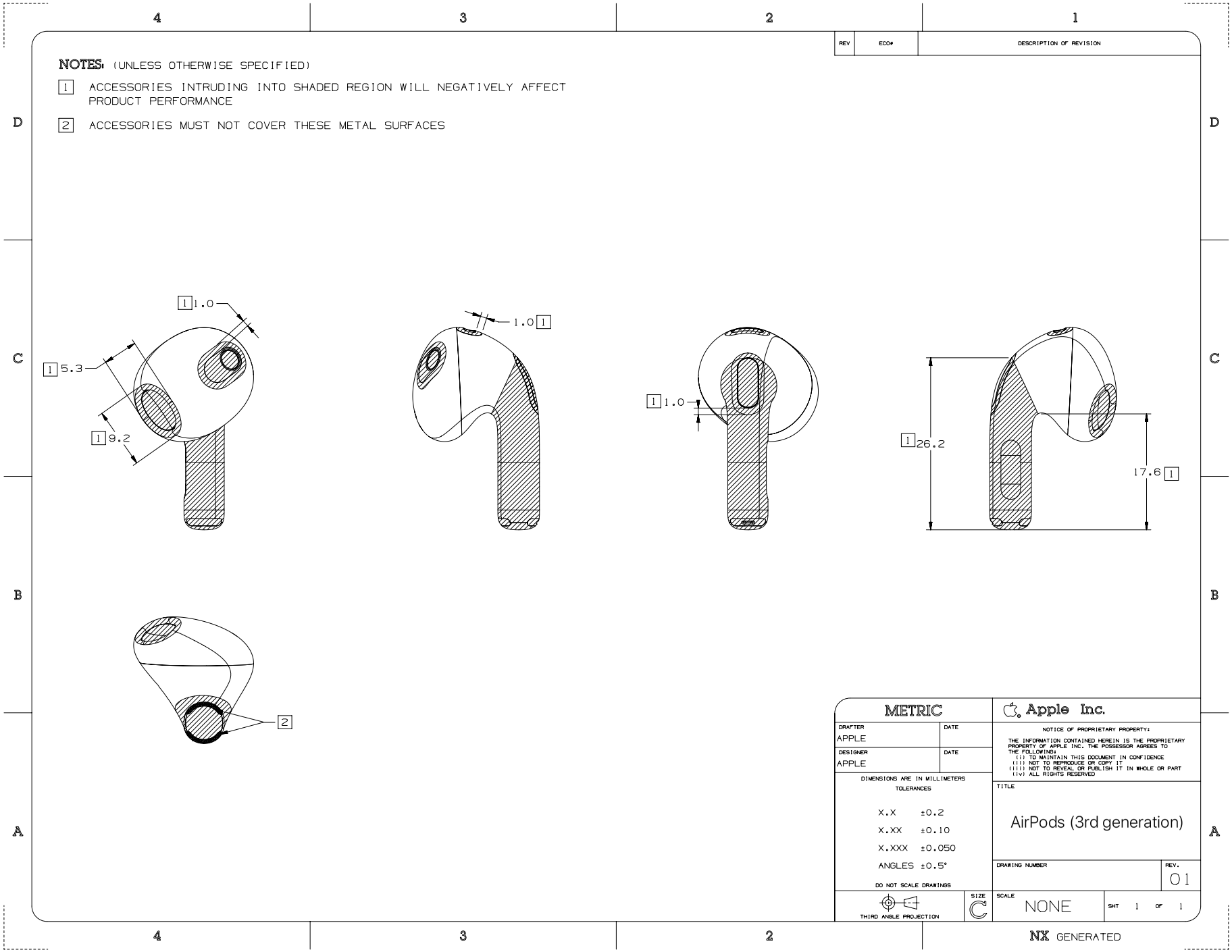

45.149 AirPods Pro

REV	ECO#	DESCRIPTION OF REVISION

NOTES: (UNLESS OTHERWISE SPECIFIED)

1. ACCESSORIES INTRUDING INTO SHADED REGIONS WILL NEGATIVELY AFFECT PRODUCT PERFORMANCE
2. ACCESSORIES MUST NOT COVER THESE METAL SURFACES

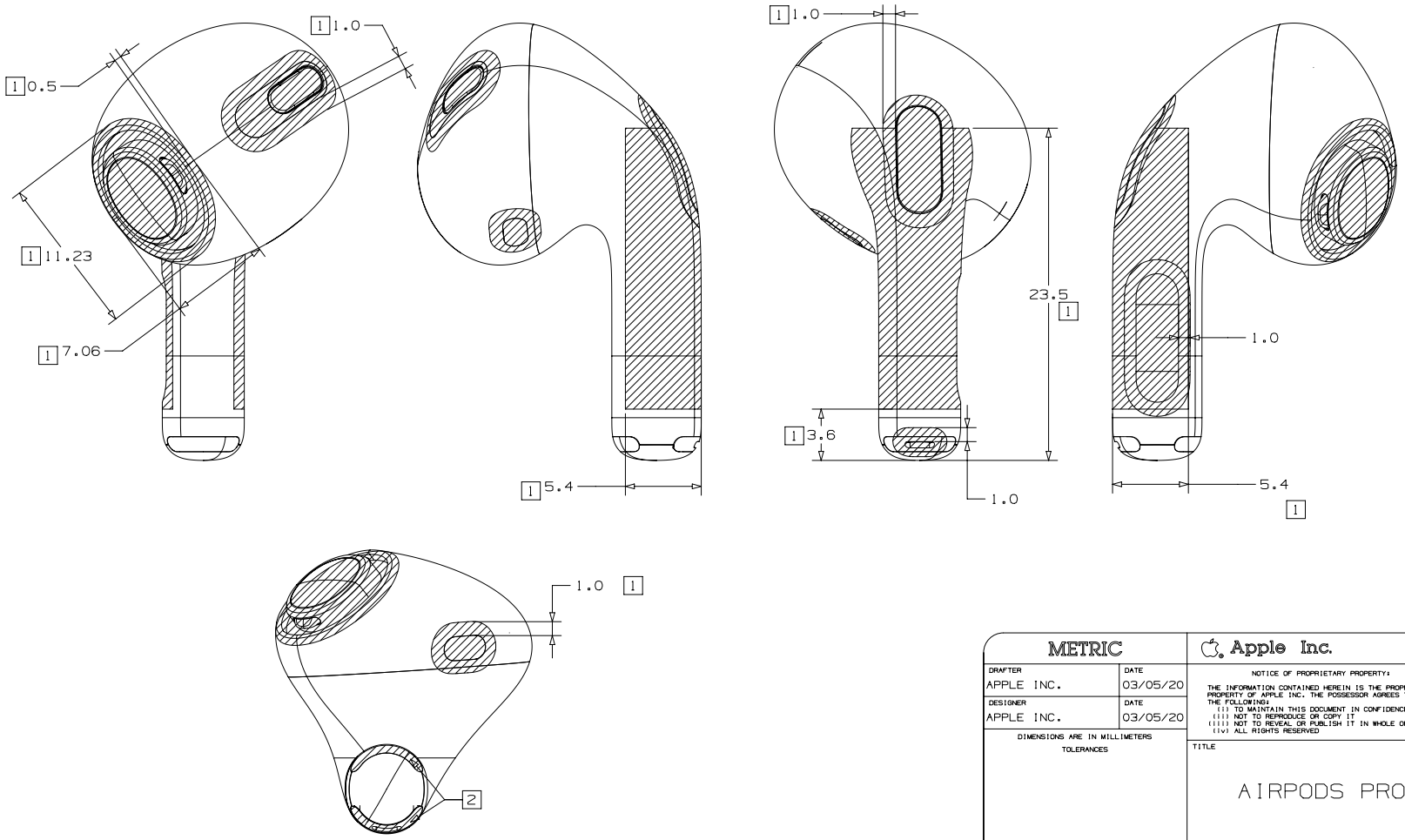

METRIC		Apple Inc.
DRAFTER APPLE INC.	DATE 03/05/20	NOTICE OF PROPRIETARY PROPERTY: THE INFORMATION CONTAINED HEREIN IS THE PROPRIETARY PROPERTY OF APPLE INC. THE POSSESSOR AGREES TO THE FOLLOWING: (i) TO MAINTAIN THIS DOCUMENT IN CONFIDENCE (ii) NOT TO REPRODUCE OR COPY IT (iii) NOT TO REVEAL OR PUBLISH IT IN WHOLE OR PART (iv) ALL RIGHTS RESERVED
DESIGNER APPLE INC.	DATE 03/05/20	
DIMENSIONS ARE IN MILLIMETERS TOLERANCES		TITLE AIRPODS PRO
DO NOT SCALE DRAWINGS		DRAWING NUMBER / REV. 01
THIRD ANGLE PROJECTION	SIZE C	SCALE NONE / SHT 1 OF 1

NX GENERATED

45.150 AirPods (1st generation) and AirPods (2nd generation)

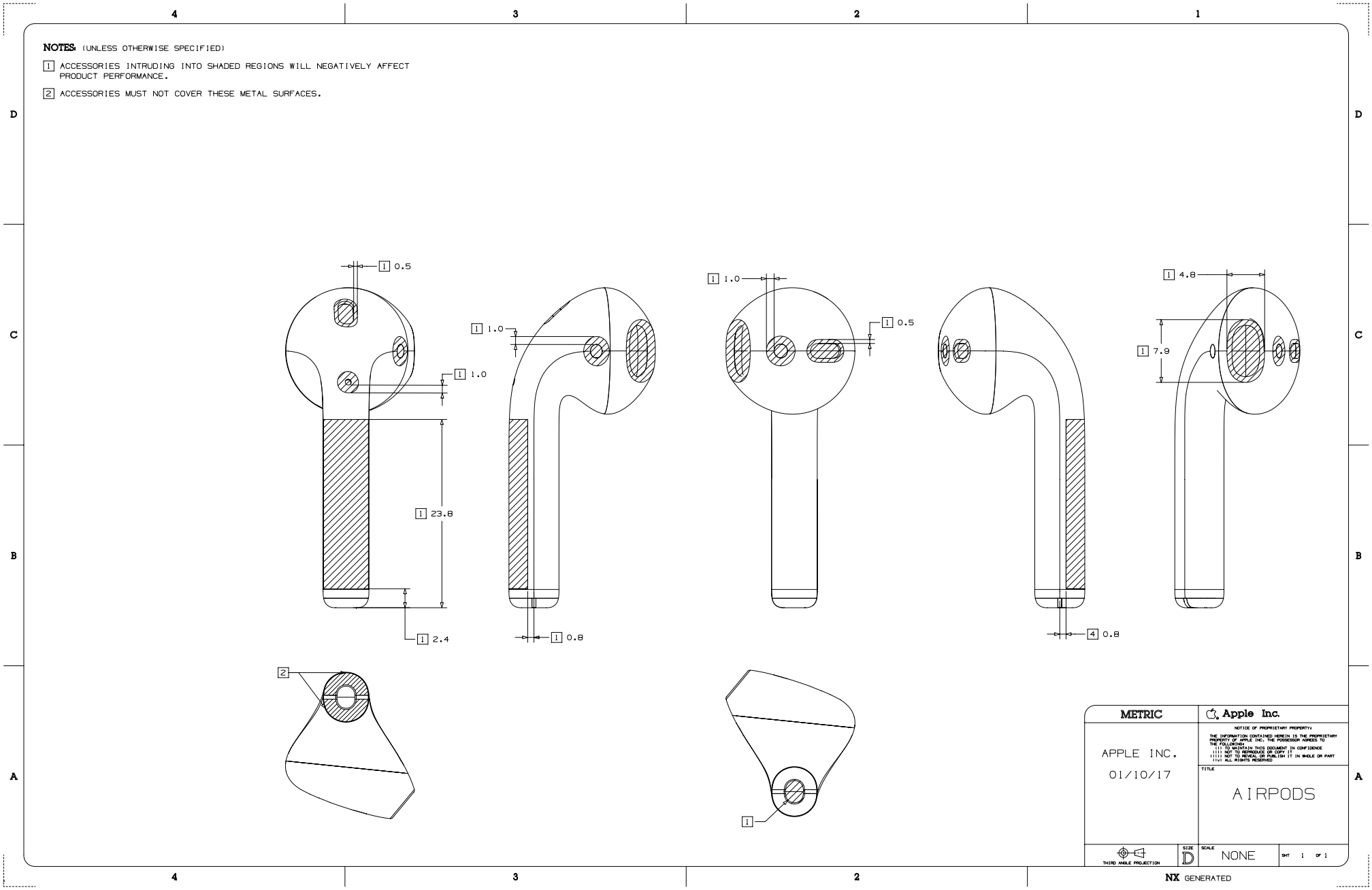

45.151 AirTag

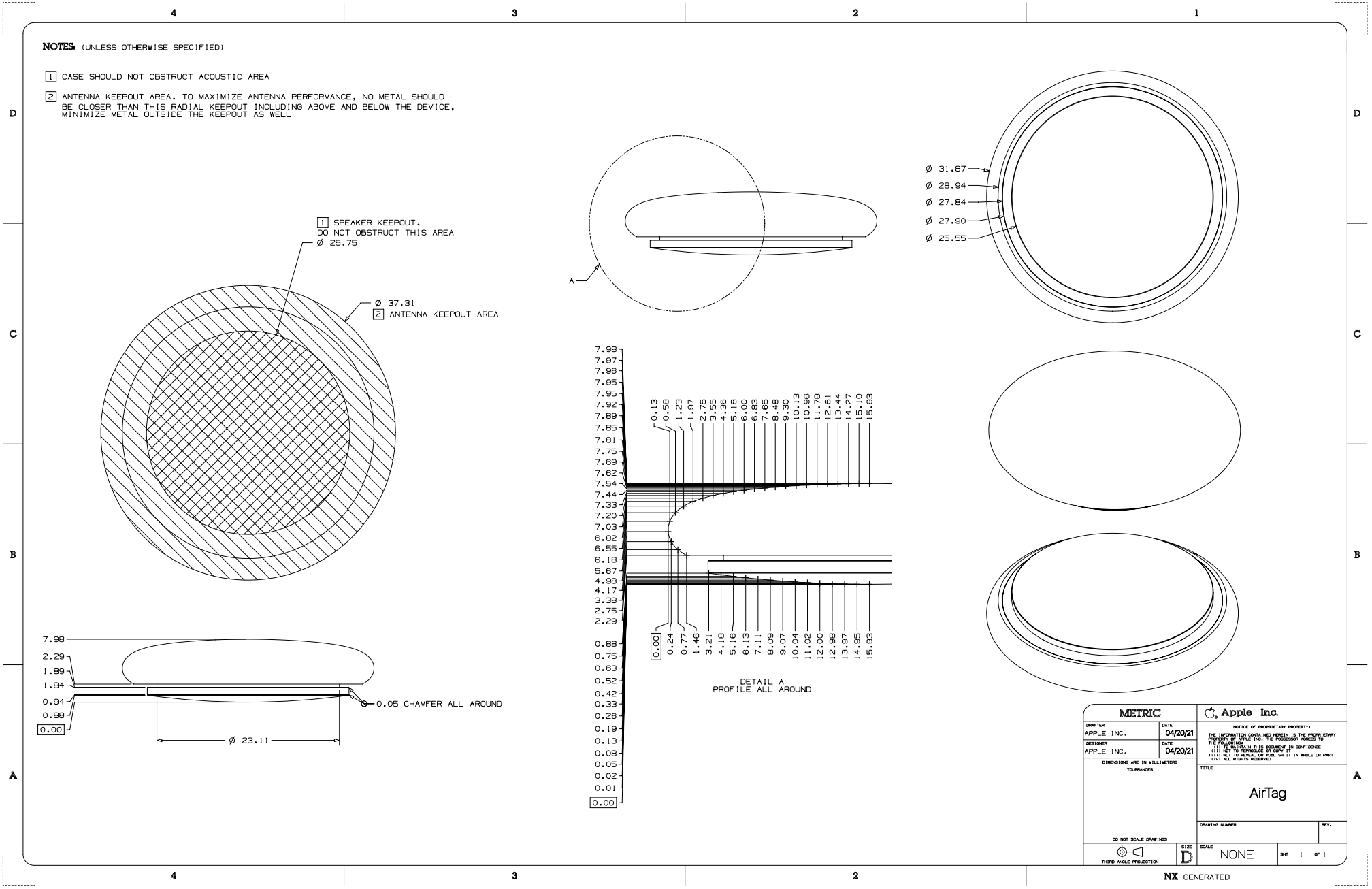

45.152 Siri Remote (2nd generation)

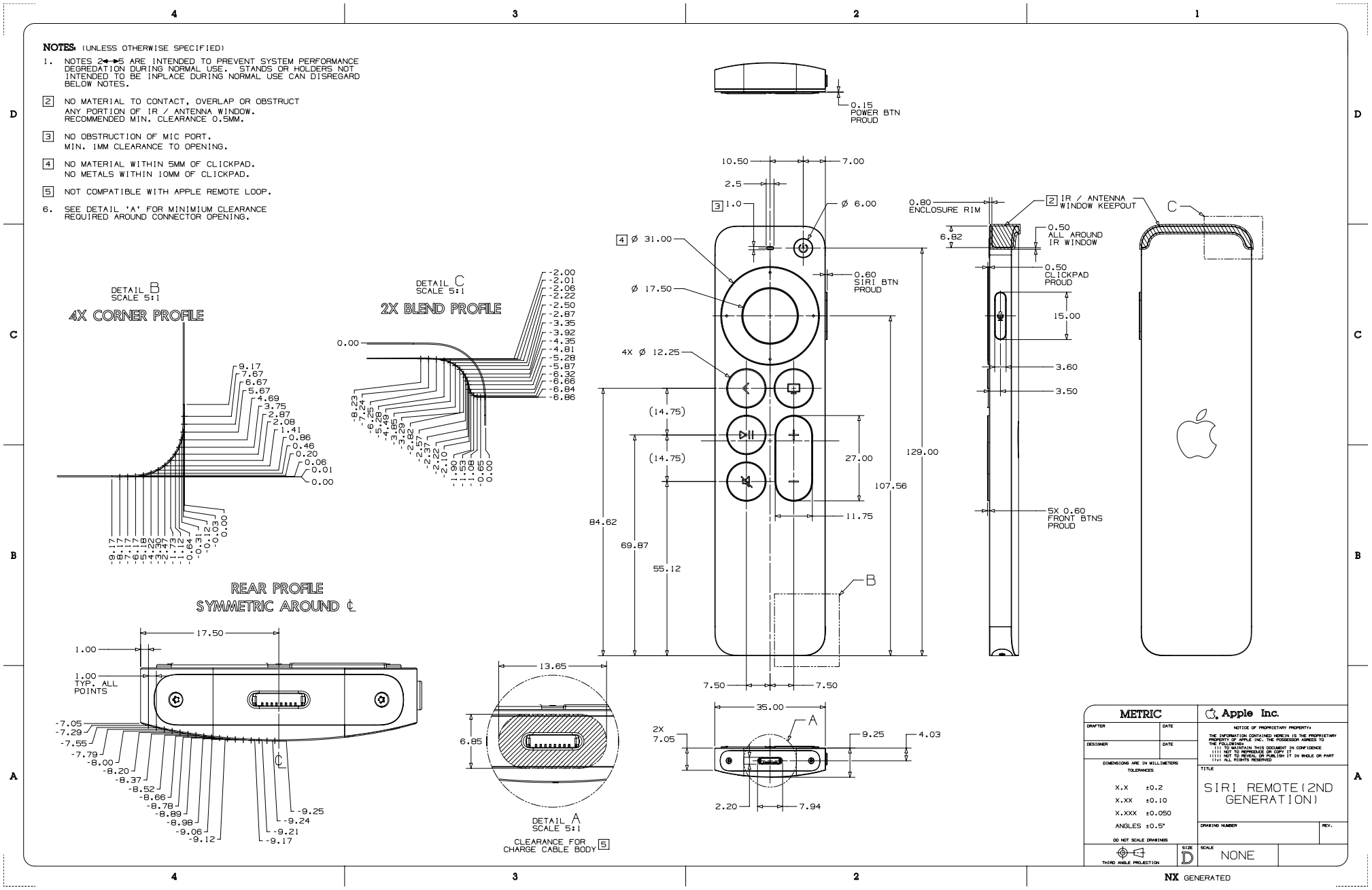

46. Revision History

This chapter describes changes to the Accessory Design Guidelines for Apple Devices from the previous revision.

Added Content

- Continuity Camera Mounts (page 92)

Updated Content

- Stylistic and editorial changes.

2022-07-08 | Copyright © 2022 Apple Inc. All Rights Reserved.

Apple Inc.
Copyright © 2022 Apple Inc.
All rights reserved

Terms and Conditions ("Terms")

These Guidelines are made available to you for informational purposes only. If you make or distribute any accessory for an Apple device based on or in connection with these Guidelines ("Accessories"), you agree to the following covenants, terms and conditions:

All intellectual property rights in and to the Guidelines, and all technology described therein, are retained by Apple Inc. ("Apple"). You acknowledge and agree that Apple is not granting you, and nothing contained herein shall constitute or be construed or interpreted as a grant, by implication, estoppel or otherwise, of any license, covenant, immunity, release or right under or with respect to any intellectual property rights of Apple, including without limitation any rights to make, use, have made, sell, import, or otherwise relating in any way to any Apple device or technology described in or relating to the Guidelines.

You agree to follow Apple's Guidelines For Using Apple Trademarks and Copyrights as published on Apple's website at www.apple.com/legal/guidelinesfor3rdparties.html ("IP Guidelines") and as may be modified from time to time. You agree not to use the marks "Apple," the Apple Logo, "Mac", "iPhone," "iPod touch," "iPad," "Apple Watch," "WATCH" or any other marks belonging or licensed to Apple in any way except as expressly authorized in writing by Apple in each instance or as permitted in the IP Guidelines. You agree that all goodwill arising out of your authorized use of Apple's marks shall inure to the benefit of and belong to Apple.

You agree to indemnify, hold harmless, and, at Apple's option, defend, Apple against any claims, causes of action, losses, liabilities, damages, fines, settlements, costs, fees, and expenses (including attorney and other professional fees and expenses) arising out of: (i) your use of the Guidelines, including without limitation, any claims that any Accessory, or the combination of any Accessory with any software, technology, intellectual property, device, apparatus or assembly not supplied by Apple, infringes any patent, copyright, trade secret or other intellectual property right; (ii) the manufacture, use, promotion, distribution, sale, offer for sale, import, other distribution or exploitation or performance of any product, case, cover, band, charging stand, or other Accessory or product incorporating any Accessory, including any personal injury or product liability claims; or (iii) any failure to comply with any of the Guidelines. You will not, without Apple's prior written consent, make any admissions of liability, enter into any settlement that imposes any obligation on Apple, or publicize any settlement details relating to Apple. In addition, for any claims related to these Terms where you do not have an indemnification obligation, you shall provide all reasonable assistance to Apple and/or its counsel in connection with the defense, remedy or mitigation of such claims.

Applicable laws or regulations may impose additional restrictions or requirements on Accessories or products that incorporate the Accessories. You represent and warrant that you are in full compliance with all applicable laws, regulations, and policies in the United States and in any other location in which you engage, in whole or in part, in any activity related to the design, manufacture, marketing, sale or offer for sale, use, or other distribution of Accessories or products that incorporate the Accessories. You agree to promptly notify Apple of any complaints or threats of complaints regarding products that incorporate the Accessories with respect to any such regulatory requirements, in which case Apple may limit or terminate your ability to make, sell or purchase additional Accessories.

You expressly acknowledge and agree that access to the Guidelines is at your sole and entire risk and that you are solely responsible and liable for any harm or damage to any Apple product arising out of any breach by you of these covenants, terms and conditions. THE GUIDELINES ARE PROVIDED "AS IS" AND WITHOUT REPRESENTATION, WARRANTY, UPGRADES OR SUPPORT OF ANY KIND. APPLE AND APPLE'S DISTRIBUTORS, AFFILIATES, LICENSOR(S) AND SUPPLIER(S) ("APPLE PARTIES") EXPRESSLY DISCLAIM ALL REPRESENTATIONS, WARRANTIES AND CONDITIONS, EXPRESS OR IMPLIED, INCLUDING THE IMPLIED WARRANTIES AND CONDITIONS OF MERCHANTABILITY, OF SATISFACTORY QUALITY, OF FITNESS FOR A PARTICULAR PURPOSE, OF NON-INFRINGEMENT AND OF ACCURACY. NONE OF THE APPLE PARTIES WARRANTS THAT THE GUIDELINES OR ANY ACCESSORY WILL MEET YOUR REQUIREMENTS, THAT DEFECTS IN THEM WILL BE CORRECTED OR THAT THEY WILL BE COMPATIBLE WITH FUTURE APPLE PRODUCTS. NO ORAL OR WRITTEN INFORMATION OR ADVICE GIVEN BY ANY APPLE PARTY OR AN APPLE AUTHORIZED REPRESENTATIVE WILL CREATE A WARRANTY.

EXCEPT TO THE EXTENT SUCH A LIMITATION IS PROHIBITED BY LAW, IN NO EVENT WILL ANY APPLE PARTY BE LIABLE FOR ANY INCIDENTAL, SPECIAL, INDIRECT, CONSEQUENTIAL, EXEMPLARY OR PUNITIVE DAMAGES, INCLUDING LOST PROFITS, LOST REVENUES OR BUSINESS INTERRUPTIONS, ARISING OUT OF OR RELATING TO THE GUIDELINES UNDER A THEORY OF CONTRACT, WARRANTY, TORT (INCLUDING NEGLIGENCE), PRODUCTS LIABILITY OR OTHERWISE, EVEN IF ANY APPLE PARTY HAS BEEN ADVISED OF THE POSSIBILITY OF SUCH DAMAGES, AND NOTWITHSTANDING THE FAILURE OF ESSENTIAL PURPOSE OF ANY REMEDY. IN NO EVENT WILL THE APPLE PARTIES' TOTAL LIABILITY TO YOU FOR ALL DAMAGES AND CLAIMS UNDER OR RELATED TO THE GUIDELINES EXCEED THE AMOUNT OF US$50.00.

These Terms will be governed by and construed and enforced under the laws of the United States and the State of Delaware, except that the arbitration clause and any arbitration hereunder shall be governed by the Federal Arbitration Act, Chapters 1 and 2. The United Nations Convention on Contracts for the International Sale of Goods shall not apply to these Terms. All disputes arising out of or in connection with these Terms shall be finally settled under the Rules of Arbitration of the International Chamber of Commerce by one arbitrator appointed in accordance with such rules, and shall be conducted according to the International Bar Association Rules on the Taking of Evidence in International Arbitration. The arbitration shall take place in San Francisco, California. The arbitration shall be conducted in English. The award shall be rendered within six months of the commencement of the arbitration, unless the arbitrator determines that the interest of justice requires that such limit be extended.